Current Schematic

ConocoPhillips

Well Name: HOWELL K #2A

API / UWI	Surface Legal Location	Field Name	License No.	State/Province	Well Configuration Type
3004521659	022-030N-008W-F	BLANCO MESAVERDE (PRORATED...		NEW MEXICO	

Ground Elevation (ft)	Original KB/RT Elevation (ft)	KB-Ground Distance (ft)	KB-Casing Flange Distance (ft)	KB-Tubing Hanger Distance (ft)
5,851.00	5,863.00	12.00		

Original Hole, 7/19/2017 8:57:49 AM

MD (ftKB)	Formation Tops
12.1	
219.2	
220.1	
224.1	
1,299.9	
1,502.0	OJO ALAMO
1,649.9	
1,678.1	KIRTLAND
2,169.9	FRUITLAND
2,690.0	PICTURED...
2,700.1	
2,927.8	
2,968.8	
2,970.1	
3,100.1	
3,140.1	
3,200.1	
3,250.0	
3,333.0	HUERFANIT...
3,683.1	CHACRA
4,252.3	
4,254.6	
4,269.4	
4,271.3	
4,274.9	
4,278.5	
4,283.1	
4,285.4	
4,286.4	
4,287.1	
4,290.0	
4,293.3	
4,294.0	
4,294.6	
4,294.9	
4,377.0	CLIFF HOUSE
4,477.0	MENEFEE
4,891.1	POINT LOO...
6,143.0	GALLUP
6,883.9	GREENHORN
6,940.9	GRANEROS
7,002.0	TWO WELLS
7,075.1	PAGUATE
7,098.1	CUBERO
7,170.9	ENCINAL
7,315.0	MORRISON

Vertical schematic (actual)

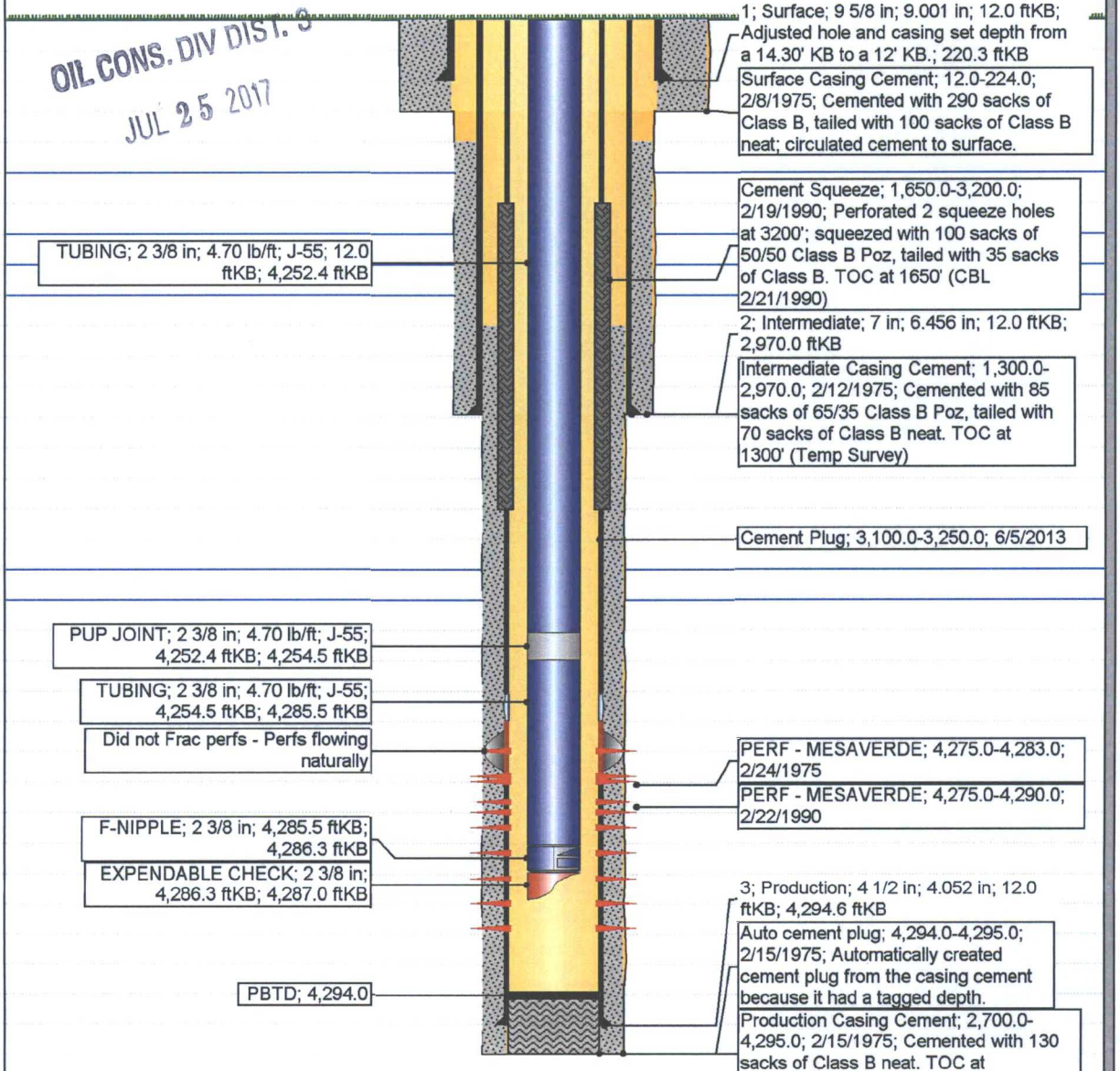

OIL CONS. DIV DIST. 3
JUL 25 2017

Report Printed: 7/19/2017