NORTHWEST PRODUCTION CORPORATION

ALBUQUERQUE, NEW MEXICO

REPLY TO:
520 SIMMS BUILDING
ALBUQUERQUE, NEW MEXICO

April 5, 1957

Oil Conservation Commission
State of New Mexico
120 East Chaco
Aztec, New Mexico

Attention: Mr. Emery C. Arnold

Gentlemen:

Attached are Forms C-104, C-110, C-122 and Packer Leakage Test covering the Pictured Cliffs, Mesaverde and Dakota formations in our "W" 2-5 well, a triple completion located in the NW/4 of the NE/4, Section 5, T26N, R5W, Rio Arriba County, New Mexico. A diagramatic sketch of the triple completion is also attached for your information. The Final Log, Form 9-330, is being forwarded to the U. S. Geological Survey, Farmington, New Mexico.

As discussed with you, it is planned to produce two of the three zones in "W" Well 2-5, using a recording gage to determine the extent of any leakage in the tubing between the Pictured Cliffs and Mesaverde formations.

Yours very truly,

NORTHWEST PRODUCTION CORPORATION

W. R. Johnston, Manager
Production Operations

RP/nw

Encls.

cc: U. S. Geological Survey
Farmington, New Mexico with Form 9-330

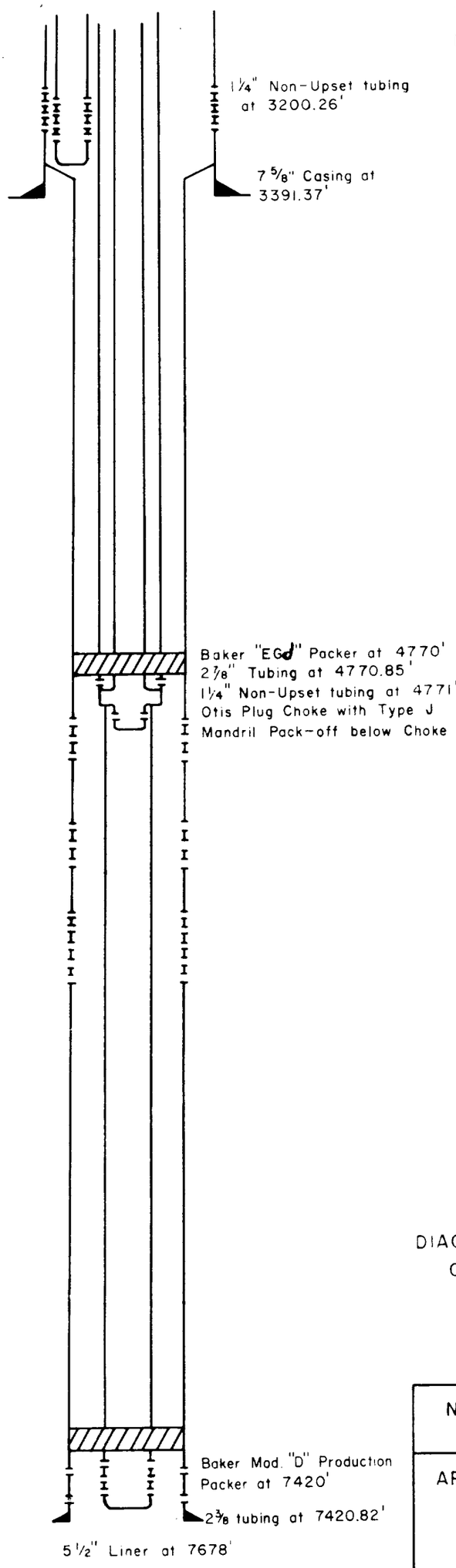

PICTURED CLIFFS DATA:

TOP OF PICTURED CLIFFS — 3132'
BOTTOM OF PICTURED CLIFFS — 3220'
PERFORATIONS: 3132 — 3162'
3172 — 3184'

MESAVERDE DATA:

TOP OF MESAVERDE — 4820'
BOTTOM OF MESAVERDE — 5445'
PERFORATIONS: 4820-4830'
4852-4874', 4886-4906'
5284-5290', 5294-5298'
5330-5334', 5346-5364'
5380-5394', 5404-5410'
5416-5426'

DAKOTA DATA:

TOP OF DAKOTA — 7462'
BOTTOM OF DAKOTA — 7672'
PERFORATIONS: 7464-7486'
7512-7520', 7538—7550'
7562-7572'

DIAGRAMATIC SKETCH OF TRIPLE GAS COMPLETION FOR "W" WELL 2-5

NORTHWEST PRODUCTION CORPORATION
ALBUQUERQUE, NEW MEXICO

APPLICATION FOR TRIPLE GAS COMPLETION OF "W" WELL 2-5 IN PICTURED CLIFFS, MESAVERDE AND DAKOTA FORMATION

RIO ARRIBA COUNTY
NEW MEXICO

CONTRACT # 152

Drawn W.H. McGahey
Approved Ray Phillips

Scale ¼" = 100'
Date 4-4-57

Form 9-330

Budget Bureau No. 42-R355.4.
Approval expires 12-31-60.

U. S. LAND OFFICE Albuquerque
SERIAL NUMBER
LEASE OR PERMIT TO PROSPECT Contract #152

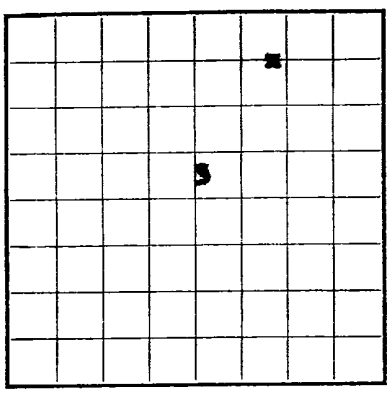

LOCATE WELL CORRECTLY

USGS-5
Acctg-1
File-1

APR 9 1957
OIL CONS. COM.
DIST. 3

UNITED STATES
DEPARTMENT OF THE INTERIOR
GEOLOGICAL SURVEY

RECEIVED
APR 8 1957
U. S. GEOLOGICAL SURVEY
FARMINGTON, NEW MEXICO

LOG OF OIL OR GAS WELL

Company Northwest Production Corporation Address 520 Simms Bldg., Albuquerque, New Mexico
Lessor or Tract "W" Field Blanco MV Extn (Pict Cliffs) (Dakota) State New Mexico
Well No. 2-5 Sec. 5 T. 26N R. 5W Meridian NMPM County Rio Arriba
Location 990 ft. {N/S} of N Line and 1650 ft. {E/W} of E Line of Section 5 Elevation 6493 ungr grnd (Derrick floor relative to sea level)

The information given herewith is a complete and correct record of the well and all work done thereon so far as can be determined from all available records.

RAY PHILLIPS
Signed Ray Phillips

Date April 4, 1957 Title Asst Mgr. Prod. Operations

The summary on this page is for the condition of the well at above date.

Commenced drilling August 12, 1956 Finished drilling December 30, 1956

OIL OR GAS SANDS OR ZONES

(*Denote gas by G*)

No. 1, from 3132 to 3162 G
No. 2, from 3172 to 3184 G
No. 3, from 4820 to 4830 G
No. 4, from 4852 to 4874 G
No. 5, from 4886 to 4906 G
No. 6, from 5286 to 5290 G
(Continued)

IMPORTANT WATER SANDS

No. 1, from None to
No. 2, from to
No. 3, from to
No. 4, from to

CASING RECORD

Size casing	Weight per foot	Threads per inch	Make	Amount	Kind of shoe	Cut and pulled from	Perforated From—	Perforated To—	Purpose
10-3/4	32.75	8-RD	--	123.01	Bowco guide				
7-5/8	24.00	8-RD	Y & T	1391.37	Baker Float				
5-1/2	15.50	8-RD	Baker Cobbs	7673.43	Baker Cobbs	See attached sheet			
5-1/2	15.50	8-RD		1493.81					
5-1/2	14.00	8-RD		3679.89					

MUDDING AND CEMENTING RECORD

Size casing	Where set	Number sacks of cement	Method used	Mud gravity	Amount of mud used
10-3/4	137.12	100	Bowco		
7-5/8	1391.37	250	Bowco		
5-1/2	7670.00	300	Bowco		

(Continued)

PLUGS AND ADAPTERS

Heaving plug—Material Length Depth set
Adapters—Material Size

SHOOTING RECORD

Size	Shell used	Explosive used	Quantity	Date	Depth shot	Depth cleaned out

TOOLS USED

Rotary tools were used from 0 feet to 7678 feet, and from feet to feet
Cable tools were used from feet to feet, and from feet to feet

DATES

, 19 Put to producing , 19

The production for the first 24 hours was barrels of fluid of which % was oil; % emulsion; % water; and % sediment. Gravity, °Bé.

If gas well, cu. ft. per 24 hours Gallons gasoline per 1,000 cu. ft. of gas

Rock pressure, lbs. per sq. in.

EMPLOYEES

L. A. Bedford, Drlg Engr, Driller
, Driller
, Driller
, Driller

FORMATION RECORD

FROM—	TO—	TOTAL FEET	FORMATION
0	2481	2481	Surface
2481	2698	217	Ojo Alamo - Sand w/some shale
2698	2899	201	Kirtland - Interbedded sand and shale
2899	3132	233	Fruitland - Shale and coal
3132	3220	88	Pictured Cliffs - Sand
3220	4820	1600	Lewis - Shale
4820	4912	92	Cliff House - Sand w/ some shale
4912	5345	433	Menefee - Interbedded sand, shale and coal
5345	5445	100	Point Lookout - Sand
5445	7258	1813	Mancos - Shale w/some sand
			Tocito sand fr 6850-6879
			Sanastee shale fr 6952-7058
7258	7311	53	Greenhorn - Limestone
7311	7462	151	Graneros - Interbedded sand, shale and coal
7462	7672	210	Dakota - Sand w/some shale
7672	7678	6	Morrison - Shale

[OVER]

16—43094-4

FOLD | MARK

FORMATION RECORD—Continued

FROM—	TO—	TOTAL FEET	FORMATION

FORMATION RECORD

FROM—	TO—	TOTAL FEET	FORMATION

EMPLOYEES

Driller ..... Driller

Driller ..... Driller

Rock pressure, lbs. per sq. in. .....

Hours worked on it, Nov. 15 to .....

Gallons gasoline per 24 hours .....

Gallons water: bbls. .....

Character .....

The footage from the last 15 hours was .....

Gallons kerosene per 24 hours .....

DATES

Cable tools were used from ..... feet to ..... feet, and from ..... feet to ..... feet

Rotary tools were used from ..... feet to ..... feet, and from ..... feet to ..... feet

TOOLS USED

Size	Shell used	Explosive used	Quantity	Date	Depth shot	Depth cleaned out

SHOOTING RECORD

Adapters—Material ..... Size .....

Heaving plug—Material ..... Length ..... Depth set .....

PLUGS AND ADAPTERS

Size	Where set	Kind of plug	Depth set

MUDDING AND CEMENTING RECORD

Size casing	Where set	Number sacks of cement	Method used	Mud hydraulic	Amount of mud used

16—43094-2 U. S. GOVERNMENT PRINTING OFFICE

HISTORY OF OIL OR GAS WELL

It is of the greatest importance to have a complete history of the well. Please state in detail the dates of redrilling, together with the reasons for the work and its results. If there were any changes made in the casing, state fully, and if any casing was "sidetracked," or left in the well, give its size and location. If the well has been dynamited, give date, size, position, and number of shots. If plugs or bridges were put in to test for water, state kind of material used, position, and results of pumping or bailing.

Size casing	Weight per foot	Threads per inch	Make	Amount	Kind of shoe	Cement	Perforations	From—	To—	Purpose

CASING RECORD

No. 1, from ..... to ..... No. 4, from ..... to .....

No. 2, from ..... to ..... No. 5, from ..... to .....

No. 3, from ..... to .....

IMPORTANT WATER SANDS

No. 1, from ..... to ..... No. 4, from ..... to .....

No. 2, from ..... to ..... No. 5, from ..... to .....

No. 3, from ..... to .....

(Denote gas by G)

OIL OR GAS SANDS OR ZONES

No. 1, from ..... to ..... No. 4, from ..... to .....

No. 2, from ..... to ..... No. 5, from ..... to .....

No. 3, from ..... to .....

Date .....

The authority on this form is for the completion of the well in accordance with the regulations.

Completed drilling ..... 19..... Finished drilling .....

Company .....

Address .....

Lessor or Tract .....

Field ..... State .....

Well No. ..... Sec. ..... T. ..... R. ..... Meridian .....

County .....

Location ..... ft. ..... of ..... Line and ..... ft. ..... of ..... Line of ..... Elevation .....

The information given herewith is a complete and correct record of the well and all work done thereon so far as can be determined from all available records.

Signed ..... RAY PHILLIPS

Title .....

LOG OF OIL OR GAS WELL

LOG TO BE WELL CORRECTED

FORM 9-330

DEPARTMENT OF THE INTERIOR
UNITED STATES
GEOLOGICAL SURVEY

MAR 9 1951
DIST. 3
OIL CON. COM.

APPROVED

PLACE OF PERMIT TO PROSPECT .....

SERIAL NUMBER .....

U. S. LAND OFFICE .....

Budget Bureau No. 42-R355.4
Approval expires 12-31-60.

WELL "W" 2-5

OIL OR GAS SANDS OR ZONES (CONTD)

No.	7	from 5294	to 5298	G
	8	5330	5334	G
	9	5346	5364	G
	10	5380	5394	G
	11	5404	5410	G
	12	5416	5426	G
	13	7464	7486	G
	14	7512	7520	G
	15	7538	7550	G
	16	7562	7572	G

MUDDING AND CEMENTING RECORD (CONTD)

Set CI BP @ 5550' w/1 sx calseal on top. Perf 2 holes @ 4774' and set Baker retrv cmtg tool at 4578'. Loaded hole w/water. Mixed 75 sx cmt and sqzd 65 sx thru perfs leaving 10 sx in csg. BD 1400#. Pump press 400# - 600#. Max, Final and Holding 2600#. Released press after 15 mins and pulled cmtg tool. Cleaned out cmt inside csg.

CORING RECORD

Cut Core #1 from 6840-90. Cut 50' and rec 46' - 37' shale and 9' sand.

HISTORY OF OIL OR GAS WELL

TD 7678'. PBD 7600'.

Perf 5½" liner from 7562-72 w/4 SPF. Set retrv pkr in 7-5/8" csg and tested top of 5½" liner. OK. Frac w/10,000 gals water only. BD 2800#. Avg 2900#. Max 3000#. Final 2850#. Stdg 1900# in 30 mins. IR 5 BPM.

Perf 7538-50 w/4 SPF and set BP at 7554'. Unable to BD form w/3000#. Set mod "K" retnrs at 7552' and 7528' and frac Dakota w/10,000 gals water. BD 4800#. Avg 4600#. Max 4800#. Stdg 2100# in 30 mins. IR 6.2 BPM. Dropped ball in retnr.

Perf 7512-20 w/4 SPF. Frac Dakota w/10,000 gals water. BD 2800#. Avg 2900#. Max and Final 2900#. Stdg 2000# in 30 mins. IR 8 BPM. Set BP at 7500'.

Perf 7464-86 w/4 SPF. Frac Dakota w/20,000 gals water. BD 2600#. Avg, Max and Final 2500#. Stdg 1800# in 30 mins. IR 16 BPM. Drld BP at 7500', retnrs at 7528' and 7552' and cleaned out to 7600'.

Refrac Dakota 7464-7572 w/22,680 gals water and 20,000# 40-60 sd. BD 2700#. Min 2500#. Max 2900#. IR 24 BPM.

Perf 5380-94, 5404-10, 5416-26 w/6 jets/ft. Frac Lower Point Lookout w/30,000 gals water and 30,000# sd. BD 1000#. Avg 1200#. Max 1300#. Final 1250#. Stdg 200# in 5 mins. IR 59.8 BPM.

Perf 5284-90, 5294-98, 5330-34, 5346-64 w/6 jets/ft. Set retrv BP at 5370' and frac upper Point Lookout and Menefee w/30,000 gals water and 30,000# 20-40 sd. BD 1000#. IP 1400#. Avg 1300#. Max 1400#. Final 1300#. Stdg 500# in 5 mins. IR 57.9 BPM. Retrieved BP.

Perf 4886-4906 w/6 jets/ft. Set retrv BP at 4908' and frac lower Cliff House w/10,000 gals water. BD 1500#. IP 1100#. Avg 1300#. Max 1400#. To vacuum in 20 mins. IR 60 BPM. Retrieved BP.

Perf 4820-30, 4852-74 w/6 jets/ft. Set retrv BP at 4875' and frac upper Cliff House w/30,000 gals water and 30,000# 20-40 sd. BD 1100#. IP 1500#. Avg 1500#. Max and final 1600#. To vacuum in 10 mins. IR 51.6 BPM. Retrieved BP and cleaned out to 5500'.

Set drill BP at 3410' and perf 7-5/8" csg fr 3132-62 w/4 bullets/ft and 3172-84 w/4 bullets/ft. Frac Pictured Cliffs w/51,500 gals water and 40,000# sd. BD 2200#. IP 1100#. Avg 950#. Max 1100#. Final 1000#. Stdg 700# in 10 mins. IR 68.7 BPM. Drld BPs at 3410' and 5550' and cleaned out to 7600'.

WELL"W" 2-5

HISTORY OF OIL OR GAS WELL (CONTD)

Set 2648.69' of 2-3/8" OD J-55 4.7# 8-RD EUE tubing at 7420.82' w/Baker mod "D" production packer at 7420' and w/Otis plug choke one joint up from bottom. Completed string w/Otis packer seat, tubing collar w/4 holes, Baker"EGJ" packer w/hydraulic holddown, 2-3/8" tubing sub, Otis plug choke, 2-3/8" x 2-7/8" tubing collar, 4,733.76' of 2-7/8" OD J-55 6.5# 8-RD EUE tubing and 12.68' of 2-7/8" OD J-55 6.5# tubing subs. Combination 2-3/8" OD x 2-7/8" string hung at 7420.82' w/Baker "EGJ" packer at 4770'.

Inside 2-7/8" OD tubing ran 4761.54' of 1-1/4" OD J-55 2.3# 10-RD non-upset tubing w/Otis closing tool and straight thru mandril and w/1" x 1-1/4" tubing collar one joint from bottom. Landed 1-1/4" string at 4771'. Dakota formation to be produced thru the 1-1/4" tubing and the Mesaverde formation to be produced thru the 1-1/4" x 2-7/8" tubing-tubing annulus.

In 7-5/8" casing x 2-7/8" tubing annulus set 3189.35' of 1-1/4" OD J-55 2.3# 10-RD non-upset tubing w/perf nipple and Otis plug choke at 3200.26' to produce the Pictured Cliffs formations

TESTS

Tested Pictured Cliffs 2-23-57 thru 3/4" Choke. SIP PC 969#. SIP MV 1112#. SIP DK 2167#. CAOF 2,124 MCFD.

Tested Mesaverde 3-1-57 thru 3/4" Choke. SIP PC 1039#. SIP MV 1107#. SIP DK 2104#. CAOF 3,425 MCFD.

Tested Dakota 1-10-57 thru 3/4" critical prover. SIP PC 1045#. SIP MV 1112#. SIP DK 2167#. CAOF 1,326 MCFD.