Budget Bureau No. 42-R359.4.
Approval expires 12-31-60.

Form 9-331 b
(April 1952) [redacted]

			[redacted]

(SUBMIT IN TRIPLICATE)

UNITED STATES
DEPARTMENT OF THE INTERIOR
GEOLOGICAL SURVEY

Indian Agency [redacted]

Allottee .....

Lease No. [redacted]

SUNDRY NOTICES AND REPORTS ON WELLS

NOTICE OF INTENTION TO DRILL		SUBSEQUENT REPORT OF WATER SHUT-OFF	[redacted]
NOTICE OF INTENTION TO CHANGE PLANS		SUBSEQUENT REPORT OF SHOOTING OR ACIDIZING	
NOTICE OF INTENTION TO TEST WATER SHUT-OFF		SUBSEQUENT REPORT OF ALTERING CASING	
NOTICE OF INTENTION TO REDRILL OR REPAIR WELL		SUBSEQUENT REPORT OF REDRILLING OR REPAIR	
NOTICE OF INTENTION TO SHOOT OR ACIDIZE		SUBSEQUENT REPORT OF ABANDONMENT	
NOTICE OF INTENTION TO PULL OR ALTER CASING		SUPPLEMENTARY WELL HISTORY	
NOTICE OF INTENTION TO ABANDON WELL			

RECEIVED
OCT 13 1958
U. S. GEOLOGICAL SURVEY
FARMINGTON, NEW MEXICO

(INDICATE ABOVE BY CHECK MARK NATURE OF REPORT, NOTICE, OR OTHER DATA)

[redacted], 19[redacted]

Well No. [redacted] is located [redacted] ft. from {N [redacted]} line and [redacted] ft. from {E [redacted]} line of sec. [redacted]

[redacted] (¼ Sec. and Sec. No.) [redacted] (Twp.) [redacted] (Range) [redacted] (Meridian)

[redacted] (Field) [redacted] (County or Subdivision) [redacted] (State or Territory)

The elevation of the derrick floor above sea level is [redacted] ft. [redacted]

DETAILS OF WORK

(State names of and expected depths to objective sands; show sizes, weights, and lengths of proposed casings; indicate mudding jobs, cementing points, and all other important proposed work)

[redacted]

RECEIVED
OCT 10 1958
OIL CON. COM.
DIST. 3

I understand that this plan of work must receive approval in writing by the Geological Survey before operations may be commenced.

Company [redacted]

Address [redacted]

[redacted]

By [redacted]

Title [redacted]

NEW MEXICO OIL CONSERVATION COMMISSION

SANTA FE, NEW MEXICO

ok Eu file

7-3-58

APPLICATION FOR DUAL COMPLETION

Field Name	County	Date
Blanco	Rio Arriba	September 15, 1958

Operator	Lease	Well No.
Magnolia Petroleum Company	Jicarilla "B"	6

Location of Well	Unit	Section	Township	Range
	A	27	27N	3W

1. Has the New Mexico Oil Conservation Commission heretofore authorized the dual completion of a well in these same pools or in the same zones within one mile of the subject well? YES X NO ____
2. If answer is yes, identify one such instance: Order No. DC-401 ____ ; Operator, Lease, and Well No.:

3. The following facts are submitted:	Upper Zone	Lower Zone
a. Name of reservoir	Pictured Cliffs	Mesa Verde
b. Top and Bottom of Pay Section (Perforations)	3070 Top 3900 Bottom	5670 Top 6200 Bottom
c. Type of production (Oil or Gas)	Gas	Gas
d. Method of Production (Flowing or Artificial Lift)	Flowing	Flowing

4. The following are attached. (Please mark YES or NO)

Yes a. Diagrammatic Sketch of the Dual Completion, showing all casing strings, including size and setting, top of cement, perforated intervals, tubing strings, including diameters and setting depth, location and type of packers and side door chokes, and such other information as may be pertinent.

Yes b. Plat showing the location of all wells on applicant's lease, all offset wells on offset leases, and the names and addresses of operators of all leases offsetting applicant's lease.

Yes c. Waivers consenting to such dual completion from each offset operator, or in lieu thereof, evidence that said offset operators have been furnished copies of the application.*

No d. Electrical log of the well or other acceptable log with tops and bottoms of producing zones and intervals of perforation indicated thereon. (If such log is not available at the time application is filed, it shall be submitted as provided by Rule 112-A.)

5. List all offset operators to the lease on which this well is located together with their correct mailing address.

Pacific Northwest Production Company, Simms Bldg., Albuquerque, New Mexico

6. Were all operators listed in Item 5 above notified and furnished a copy of this application? YES X NO ____ . If answer is yes, give date of such notification September 15, 1958 .

CERTIFICATE: I, the undersigned, state that I am the Authorized Agent of the Magnolia Petroleum Company (company), and that I am authorized by said company to make this report; and that this report was prepared under my supervision and direction and that the facts stated therein are true, correct and complete to the best of my knowledge.

B. Young, Jr.
Signature

* Should waivers from all offset operators not accompany an application for administrative approval, the New Mexico Oil Conservation Commission will hold the application for a period of twenty (20) days from date of receipt by the Commission's Santa Fe office. If, after said twenty-day period, no protest nor request for hearing is received by the Santa Fe office, the application will then be processed.

NOTE: If the proposed dual completion will result in an unorthodox well location and/or a non-standard proration unit in either or both of the producing zones, then separate application for approval of the same should be filed simultaneously with this application.

[illegible]

[illegible]
Sec. [illegible], T-[illegible], R-[illegible],
Rio Arriba County, New Mexico
Elevation 7372'

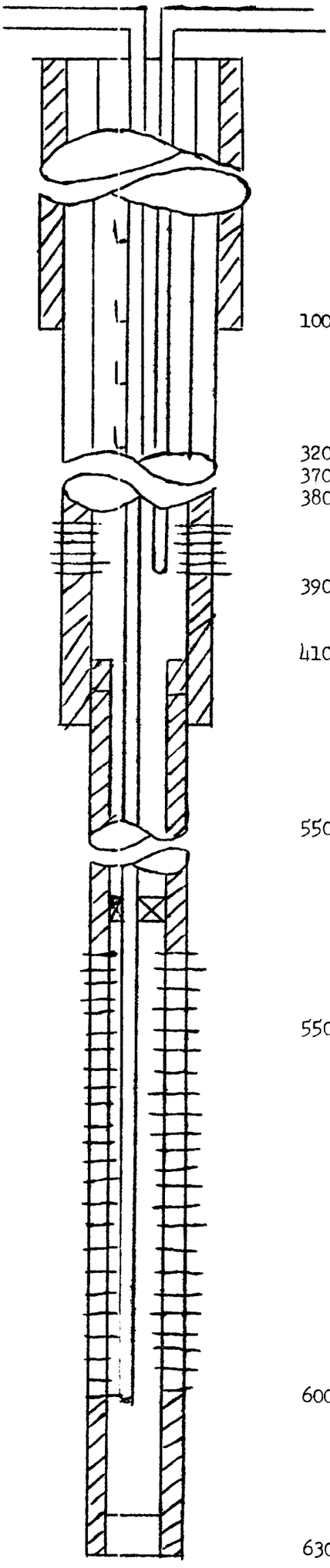

Note: Depths are approximate and are based on previously completed wells in the area. Exact setting depths will be determined from formation tops encountered while drilling the well.

300' 10 3/4 inch surface casing, cement circulated
1000' to 2000' 4 Merla WF-3 gas lift valves mounted on on Garrett D2F-1 mandrels

3200' Top of cement behind production casing
3700' to 3800' Pictured Cliffs perforated interval
3800' Bottom of 2 inch EUE tubing

3900' Top of 5" liner

4100' 7 5/8 inch production casing

5500' Production packer

5500' to 6000' Mesaverde perforated interval

6000' Bottom of 2 inch EUE and hydril tubing

6300' Total depth, Bottom of 5 inch liner, cement circulated

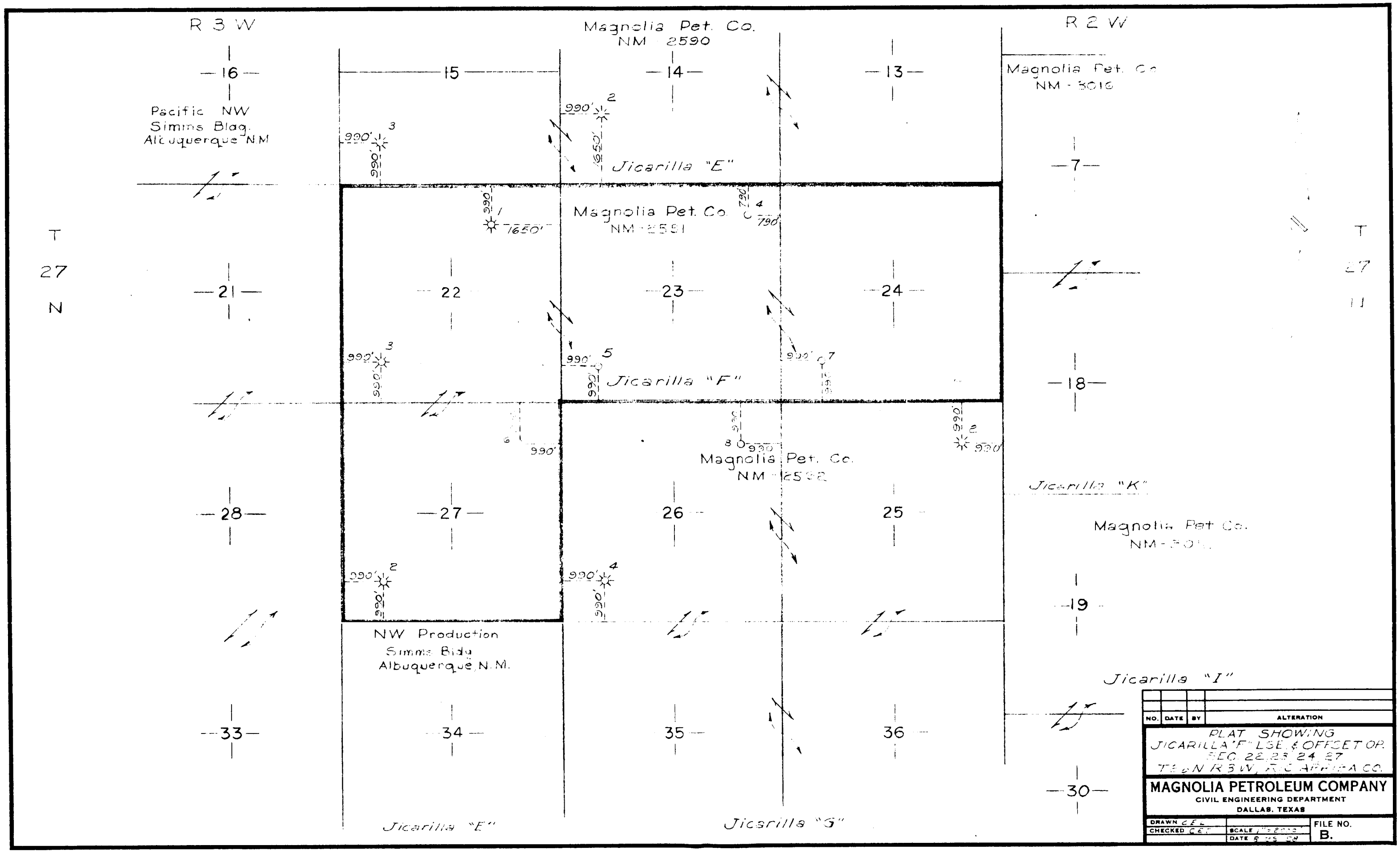
R 3 W
R 2 W
T 27 N
T 27 N
Magnolia Pet. Co.
NM - 2590
Magnolia Pet. Co.
NM - 3016
Pacific NW
Simms Bldg.
Albuquerque N.M.
Jicarilla "E"
Magnolia Pet. Co.
NM - 2591
Jicarilla "F"
Magnolia Pet. Co.
NM - 2592
Jicarilla "K"
Magnolia Pet. Co.
NM - 3015
NW Production
Simms Bldg.
Albuquerque, N.M.
Jicarilla "I"
Jicarilla "E"
Jicarilla "G"
16
15
14
13
7
21
22
23
24
18
28
27
26
25
19
33
34
35
36
30
990'
7650'
790'
NO. DATE BY ALTERATION
PLAT SHOWING
JICARILLA "F" LSE. & OFFSET OP.
SEC. 22, 23, 24, 27
T. 27 N. R. 3 W., N.M.P.M. CO.
MAGNOLIA PETROLEUM COMPANY
CIVIL ENGINEERING DEPARTMENT
DALLAS, TEXAS
DRAWN C.E.L.
CHECKED C.E.T.
SCALE
DATE
FILE NO.
B.