OIL CONSERVATION COMMISSION
1000 Rio Brazos Rd.
Aztec, New Mexico

DATE 5-22-60

OIL CONSERVATION COMMISSION
BOX 871
SANTA FE, NEW MEXICO

RE: Proposed NSP _____

Proposed NSL _____

Proposed NFO _____

Proposed DC ✓

Gentlemen:

I have examined the application dated 5-12-60

for the EPNG Co SJU 27.5 #50 G-19-27N-5W

Operator Lease and Well No. S-T-R

and my recommendations are as follows:

Approve

Yours very truly,

Emery C Arnold

OIL CONSERVATION COMMISSION

NEW MEXICO OIL CONSERVATION COMMISSION

SANTA FE, NEW MEXICO

7-3-58

APPLICATION FOR DUAL COMPLETION

Field Name	County	Date
Blanco M. V. & So. Blanco Pictured Cliffs	Rio Arriba	May 12, 1960

Operator	Lease	Well No.
El Paso Natural GasCompany	San Juan 27-5 Unit	50 (PM)

Location of Well	Unit	Section	Township	Range
	G	19	27N	5W

1. Has the New Mexico Oil Conservation Commission heretofore authorized the dual completion of a well in these same pools or in the same zones within one mile of the subject well? YES X NO ____
2. If answer is yes, identify one such instance: Order No. DC-758 ; Operator, Lease, and Well No.:

El Paso Natural Gas Co. San Juan 27-5 Unit No. 48 (PM)

3. The following facts are submitted:	Upper Zone	Lower Zone
a. Name of reservoir	Pictured Cliffs	Mesa Verde
b. Top and Bottom of Pay Section (Perforations)	3162-3226	5306-5410
c. Type of production (Oil or Gas)	Gas	Gas
d. Method of Production (Flowing or Artificial Lift)	Flowing	Flowing

4. The following are attached. (Please mark YES or NO)

Yes a. Diagrammatic Sketch of the Dual Completion, showing all casing strings, including size and setting, top of cement, perforated intervals, tubing strings, including diameters and setting depth, location and type of packers and side door chokes, and such other information as may be pertinent.

Yes b. Plat showing the location of all wells on applicant's lease, all offset wells on offset leases, and the names and addresses of operators of all leases offsetting applicant's lease.

No c. Waivers consenting to such dual completion from each offset operator, or in lieu thereof, evidence that said offset operators have been furnished copies of the application.*

No d. Electrical log of the well or other acceptable log with tops and bottoms of producing zones and intervals of perforation indicated thereon. (If such log is not available at the time application is filed, it shall be submitted as provided by Rule 112-A.)

5. List all offset operators to the lease on which this well is located together with their correct mailing address.

RECEIVED
MAY 20 1960
OIL CON. COM.
DIST. 3

6. Were all operators listed in Item 5 above notified and furnished a copy of this application? YES ____ NO ____. If answer is yes, give date of such notification ____.

CERTIFICATE: I, the undersigned, state that I am the Division Petroleum Engr. of the El Paso Natural Gas Co. (company), and that I am authorized by said company to make this report; and that this report was prepared under my supervision and direction and that the facts stated therein are true, correct and complete to the best of my knowledge.

ORIGINAL SIGNED E. S. OBERLY

Signature

* Should waivers from all offset operators not accompany an application for administrative approval, the New Mexico Oil Conservation Commission will hold the application for a period of twenty (20) days from date of receipt by the Commission's Santa Fe office. If, after said twenty-day period, no protest nor request for hearing is received by the Santa Fe office, the application will then be processed.

NOTE: If the proposed dual completion will result in an unorthodox well location and/or a non-standard proration unit in either or both of the producing zones, then separate application for approval of the same should be filed simultaneously with this application.

STATE OF NEW MEXICO)
)
COUNTY OF SAN JUAN)

I, Roy G. Miller, being first duly sworn upon my oath depose and say as follows:

I am an employee of El Paso Natural Gas Co., and that on March 29, 1960, I was called to the location of the El Paso Natural Gas Company San Juan 27-5 Unit No. 50(PM) Well located in the SWNE/4 of Section 19, Township 27 North, Range 5 West, N.M.P.M., for advisory service in connection with installation of a production packer. In my presence, a Baker Model "EGJ" Production Packer was set in this well at 3343 feet in accordance with the usual practices and customs of the industry.

Roy G. Miller

Subscribed and sworn to before me this 12th day of May, 1960.

Lawrence R. Hall
Notary Public in and for San Juan County, New Mexico

My commission expires
My Commission Expires 6-21-61

PLAT SHOWING LOCATION OF DUALLY COMPLETED
El Paso Natural Gas Co. San Juan 27-5 Unit No. 50 (PM)
and Offset Acreage

T-27-N
R-5-W

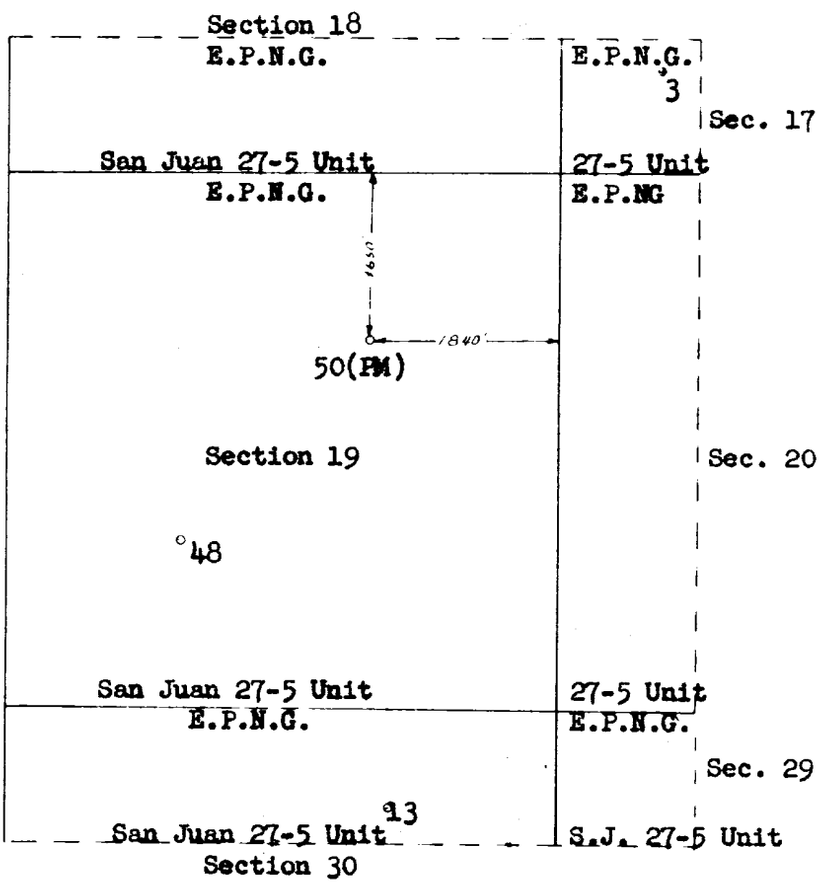

EL PASO NATURAL GAS COMPANY
EL PASO, TEXAS

SCALE	DATE	No.
DRAWN BY	CHECKED BY	

FORM 7-132R (10-56)

Schematic Diagram of Dual Completion
El Paso Natural Gas Co. San Juan 27-5 Unit No. 50 (PM)
NE/4 Section 19, T-27-N, R-5-W

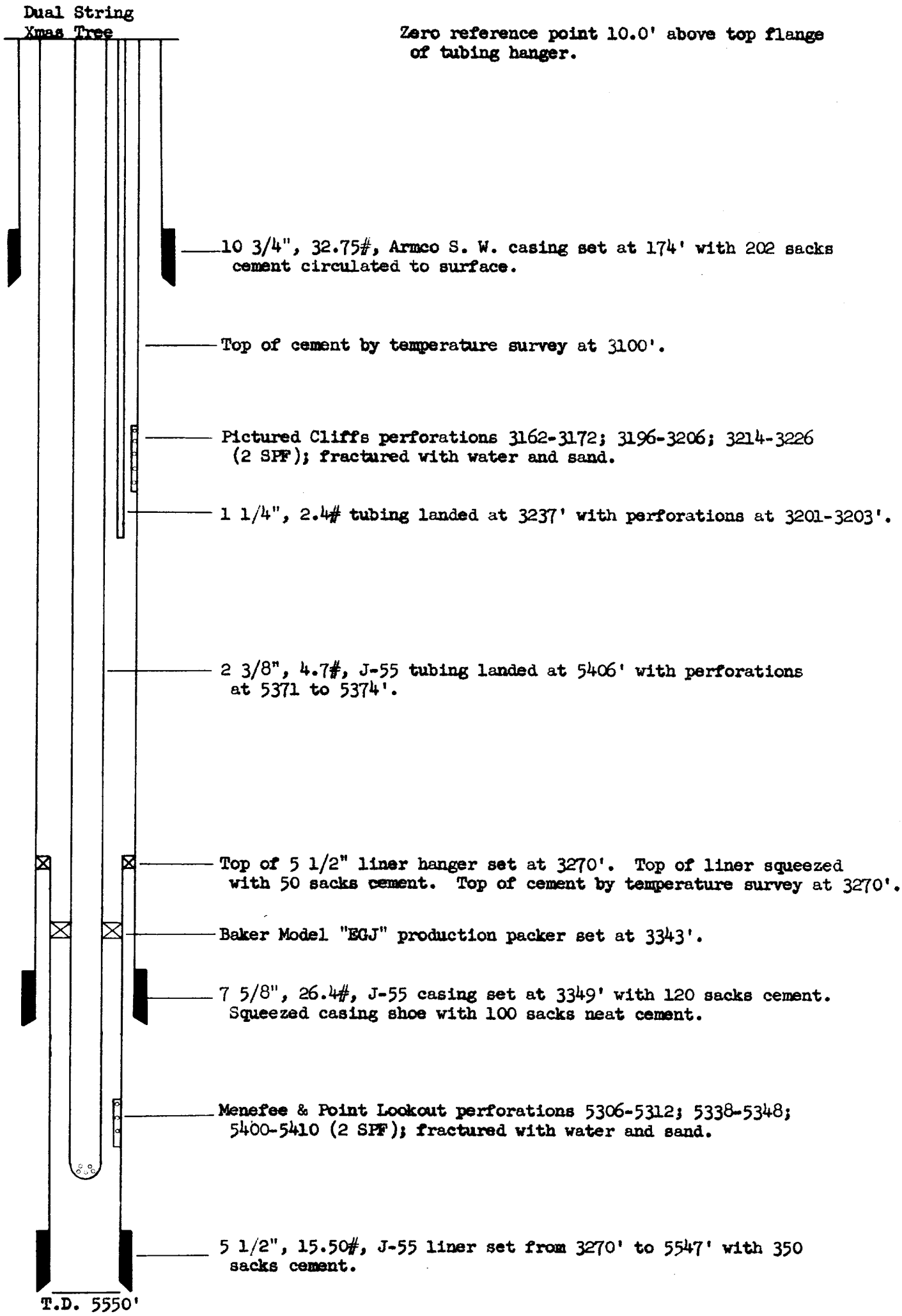

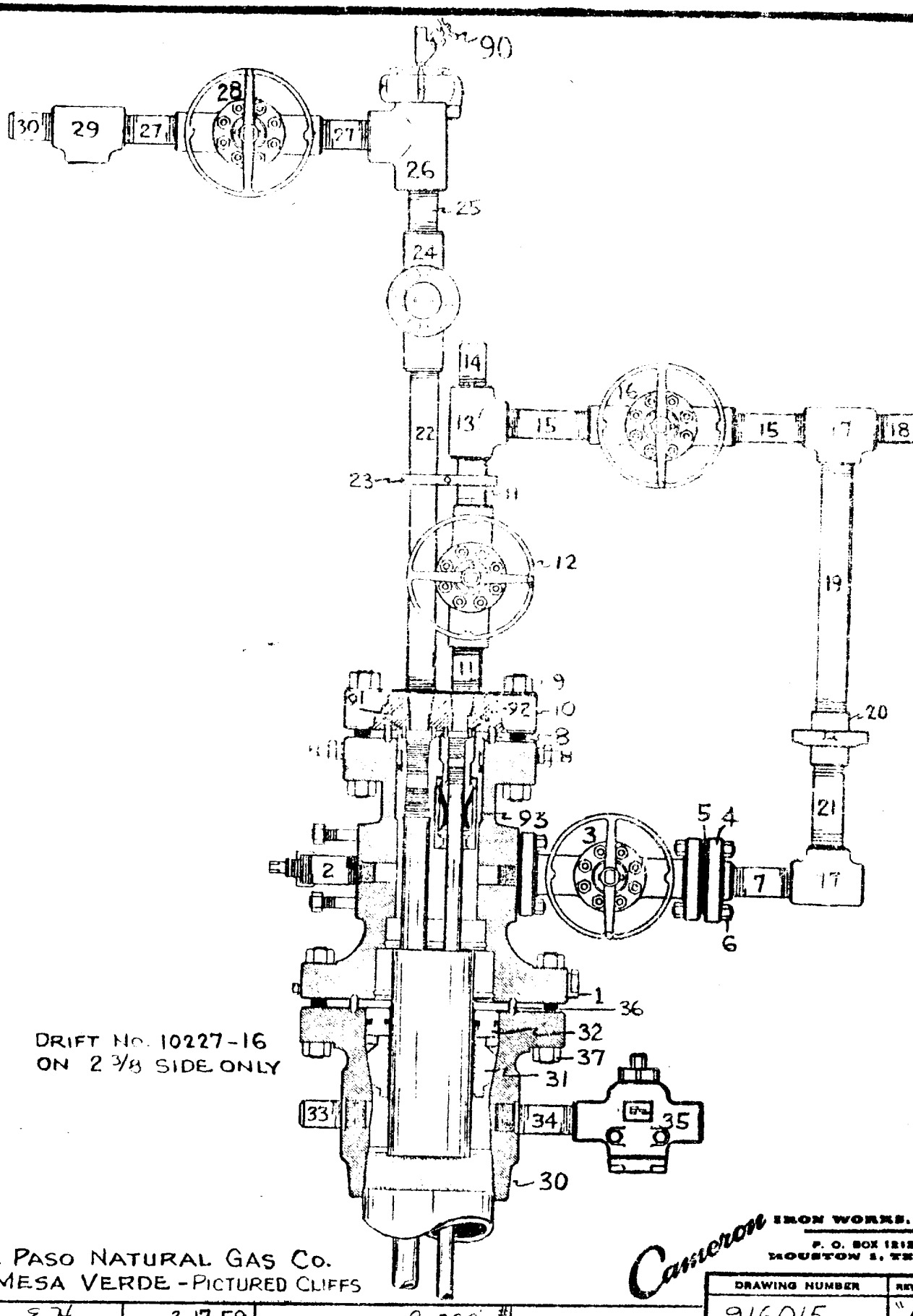

DRIFT No. 10227-16
ON 2 3/8 SIDE ONLY

EL PASO NATURAL GAS Co.
MESA VERDE - PICTURED CLIFFS

Cameron IRON WORKS, INC.
P. O. BOX 1212
HOUSTON 1, TEXAS

DRAWN BY	DATE	WORKING PRESSURE	DRIFT NO	DRAWING NUMBER	REVISION
E.H.	3-17-59	2,000 #		916015	"A"

EL PASO NATURAL GAS COMPANY

OPEN FLOW TEST DATA

DUAL COMPLETION DATE **April 19, 1960**

Operator: **El Paso Natural Gas Company**		Lease: **San Juan 27-5 No. 50 (P)**	
Location: **1650N, 1850E; 19-27-5**		County: **Rio Arriba**	State: **New Mexico**
Formation: **Pictured Cliffs**		Pool: **South Blanco**	
Casing: Diameter **7-5/8**	Set At: Feet **3349**	Tubing: Diameter **1-1/4**	Set At: Feet **3227**
Pay Zone: From **3162**	To **3226**	Total Depth: **5543 c/o 5505**	Shut In **3/29/60**
Stimulation Method: **Sand Water Frac.**		Flow Through: Casing **X**	Flow Through: Tubing

Choke Size, Inches: **.75**		Choke Constant: C **12.365**		**Baker "EGJ" packer at 3343**	
Shut-in Pressure, Casing: PSIG **(PC) 1067**	+ 12 = PSIA **1079**	Days Shut-in **21**	Shut-in Pressure, Tubing: PSIG **(PC) 1069**	+ 12 = PSIA **1081**	
Flowing Pressure: P PSIG **114**	+ 12 = PSIA **126**		Working Pressure: Pw PSIG **121**	+ 12 = PSIA **133**	
Temperature: T **56** F	Ft **1.0039**	n **.85**	Fpv (From Tables) **1.011**	Gravity: Fg **.650**	Fg **.9608**

Initial SIPT (MV) = 1084 psig
Final SIPT (MV) = 1087 psig

CHOKE VOLUME Q = C x P_t x F_t x F_g x F_{pv}

Q = 12.365 x 126 x 1.0039 x .9608 x 1.011 = 1519 MCF D

OPEN FLOW Aof = Q $\left(\frac{P_c^2}{P_c^2 - P_w^2}\right)^n$

Aof = $\left(\frac{1168561}{1150872}\right)^n$ = 1519 x $1.0153^{.85}$ = 1519 x 1.0130

Aof = 1539 MCF D

TESTED BY **S. V. Roberts**

WITNESSED BY

Lewis D. Galloway

L. D. Galloway

EL PASO NATURAL GAS COMPANY

OPEN FLOW TEST DATA

DUAL COMPLETION

DATE **April 8, 1960**

Operator: **El Paso Natural Gas Company**		Lease: **San Juan 27-5 No. 50 (M)**	
Location: **1650N, 1850E; 19-27-5**		County: **Rio Arriba**	State: **New Mexico**
Formation: **Mesa Verde**		Pool: **Blanco**	
Casing: Diameter: **5-1/2**	Set At: Feet: **5547**	Tubing: Diameter: **2**	Set At: Feet: **5396**
Pay Zone: From: **5306**	To: **5410**	Total Depth: **5543 c/o 5505**	Shut In: **3/29/60**
Stimulation Method: **Sand Water Frac.**		Flow Through Casing	Flow Through Tubing: **X**

Choke Size, Inches: **.75**	Choke Constant: C: **12.365**	**5-1/2 liner 3270 - 5547**	
Shut-In Pressure, Casing, PSIG + 12 = PSIA: **1035 (PC)** + 12 = **1047**	Days Shut-In: **10**	Shut-In Pressure, Tubing, PSIG + 12 = PSIA: **1062 (MV)** + 12 = **1074**	
Flowing Pressure: P, PSIG + 12 = PSIA: **133** + 12 = **145**		Working Pressure: P_w, PSIG + 12 = PSIA: **Calc.** + 12 = **286**	
Temperature: T **60** °F, F_t **1.000**	n: **.75**	Fpv (From Tables): **1.012**	Gravity: **.627**, Fg: **.9798**

Initial SIPT (PC) = 1036 psig
Final SIPC (PC) = 1038 psig

Packer at 3343

CHOKE VOLUME $Q = C \times P_t \times F_t \times F_g \times F_{pv}$

$Q = 12.365 \times 145 \times 1.000 \times .9798 \times 1.012 = 1778$ MCF/D

OPEN FLOW $Aof = Q \left(\frac{P_c^2}{P_c^2 - P_w^2} \right)^n$

$Aof = \left(\frac{1153476}{1071680} \right)^n = 1.0763^{.75} \times 1778 = 1.0567 \times 1778$

$Aof = 1879$ MCF/D

TESTED BY **S. V. Roberts**

WITNESSED BY

Lewis D. Galloway

L. D. Galloway