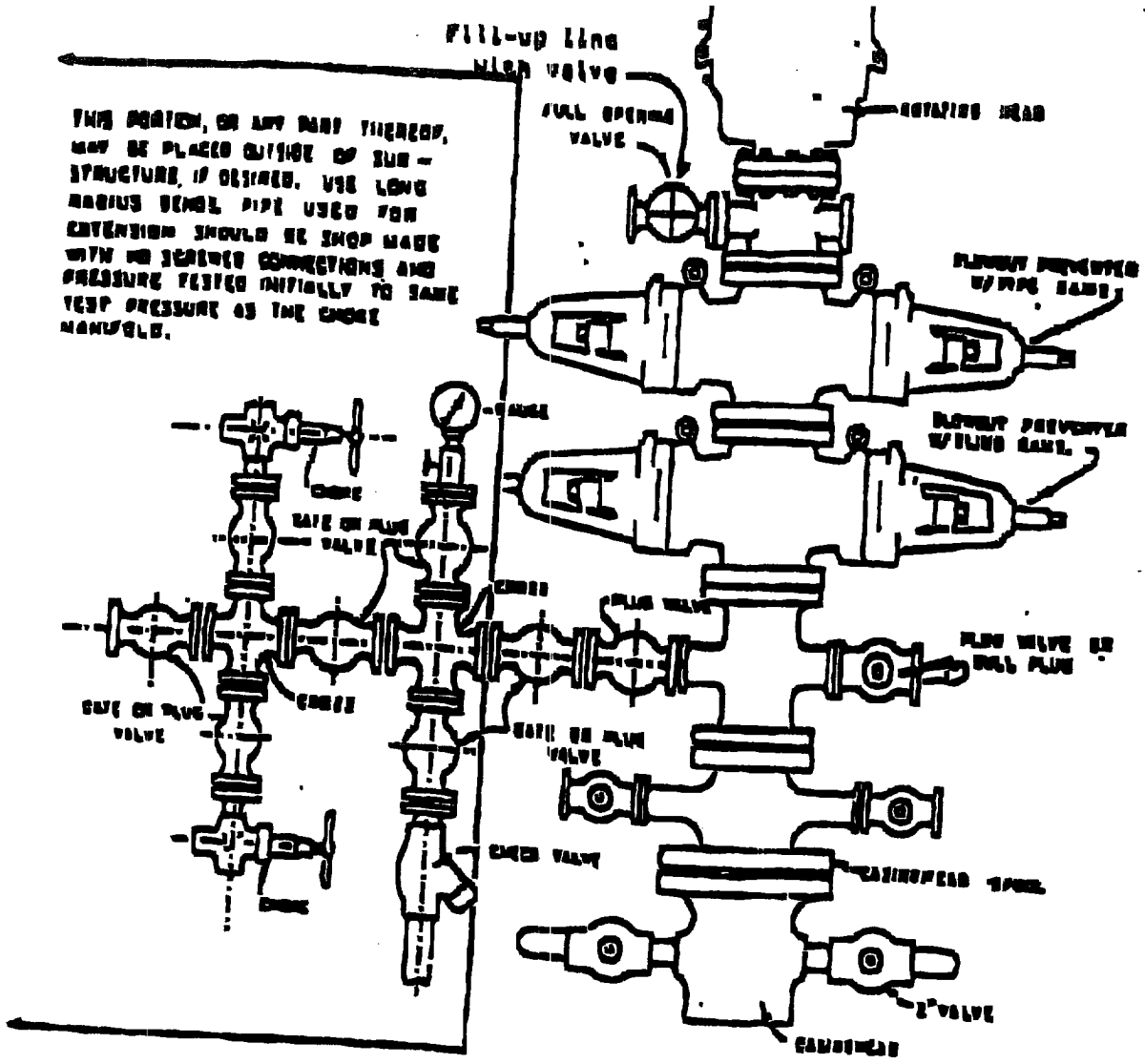

THIS PORTION, OR ANY PART THEREOF, MAY BE PLACED OUTSIDE OF SUB-STRUCTURE, IF DESIRED. USE LONG RADIUS BENDS. PIPE USED FOR EXTENSION SHOULD BE SHOP MADE WITH NO SCREWED CONNECTIONS AND PRESSURE TESTED INITIALLY TO SAME TEST PRESSURE AS THE CHOKE MANIFOLD.

BLOWOUT PREVENTER HOOKUP

Drilling contractors used in the San Juan Basing supply 3000 psi equipment, but cannot provide annular preventers because of sub-structure limitations. Maximum anticipated surface pressures for this well will not exceed the working pressure of the proposed BOP system. Please see the attached BOP diagram details 2000 psi equipment according to Onshore Order No. 2 even though the equipment will test to 3000 psi. The 2000 psi system allows deletion of the annular preventer and fulfills your requirements (note diagram No. 1). In addition, the following equipment will comprise the 2000 psi system:

1. Two rams with one blind and one pipe ram.
2. Kill line (2 inch maximum).
3. One kill line valve.
4. One choke line valve.
5. Two chokes (reference diagram No. 1).
6. Upper kelly cock valve with handle.
7. Safety valve and subs to fit all drill strings in use.
8. Two-inch minimum choke line.
9. Pressure gauge on choke manifold.
10. Fill-up line above the upper most preventer.
11. Rotating head.