Revised March 23, 2017

RECEIVED:	REVIEWER:	TYPE:	APP NO:

ABOVE THIS TABLE FOR OCD DIVISION USE ONLY

NEW MEXICO OIL CONSERVATION DIVISION
- Geological & Engineering Bureau –
1220 South St. Francis Drive, Santa Fe, NM 87505

ADMINISTRATIVE APPLICATION CHECKLIST

THIS CHECKLIST IS MANDATORY FOR ALL ADMINISTRATIVE APPLICATIONS FOR EXCEPTIONS TO DIVISION RULES AND REGULATIONS WHICH REQUIRE PROCESSING AT THE DIVISION LEVEL IN SANTA FE

Applicant: XTO Permian Operating **OGRID Number:** 373075
Well Name: Multiple Wells **API:** Multiple
Pool: WC Willimas Sink; Bone Spring ; Big Eddy ;Wolfcamp (GAS) **Pool Code:** 97650;72120

SUBMIT ACCURATE AND COMPLETE INFORMATION REQUIRED TO PROCESS THE TYPE OF APPLICATION INDICATED BELOW

1) **TYPE OF APPLICATION:** Check those which apply for [A]
   A. Location – Spacing Unit – Simultaneous Dedication
   ☐ NSL ☐ NSP (PROJECT AREA) ☐ NSP (PRORATION UNIT) ☐ SD

   B. Check one only for [I] or [II]
   [I] Commingling – Storage – Measurement
   ☐ DHC ☐ CTB ☐ PLC ☐ PC ☐ OLS ☒ OLM
   [II] Injection – Disposal – Pressure Increase – Enhanced Oil Recovery
   ☐ WFX ☐ PMX ☐ SWD ☐ IPI ☐ EOR ☐ PPR

FOR OCD ONLY
☐ Notice Complete
☐ Application Content Complete

2) **NOTIFICATION REQUIRED TO:** Check those which apply.
   A. ☐ Offset operators or lease holders
   B. ☒ Royalty, overriding royalty owners, revenue owners
   C. ☐ Application requires published notice
   D. ☐ Notification and/or concurrent approval by SLO
   E. ☒ Notification and/or concurrent approval by BLM
   F. ☐ Surface owner
   G. ☒ For all of the above, proof of notification or publication is attached, and/or,
   H. ☐ No notice required

3) **CERTIFICATION:** I hereby certify that the information submitted with this application for administrative approval is **accurate** and **complete** to the best of my knowledge. I also understand that **no action** will be taken on this application until the required information and notifications are submitted to the Division.

Note: Statement must be completed by an individual with managerial and/or supervisory capacity.

Russell Young
Print or Type Name

10/15/2025
Date

832-302-5430
Phone Number

Russell Young
Signature

russell.young@exxonmobil.com
e-mail Address

October 15, 2025

VIA ONLINE FILING

Albert C.S. Chang, Division Director
Oil Conservation Division
New Mexico Department of Energy, Minerals and Natural Resources
1220 South Saint Francis Drive
Santa Fe, NM 87505

Re: Application of XTO Permian Operating, LLC for administrative approval to surface commingle VRU-Flash gas[1] from participating areas and lease comprised of Sections 13, 14, 15, 16, 17, 20, 21, 22, 23 and 24 of Township 20 South, Range 31 East, Edd County, New Mexico (the "Lands")

Dear Mr. Chang:

XTO Permian Operating, LLC (OGRID No. 373075) ("XTO"), pursuant to 19.15.12.10 NMAC, seeks administrative approval to surface commingle (off lease) diversely owned gas production at the Big Eddy Unit DI 30 Central Tank Battery ("CTB") *insofar as all existing and future wells drilled in the following spacing units:*

(a) The **9,355.64-acre**, of participating area (PA) comprised of Section 13: All; Section 14: All; Section 22: S2SE; Section 23: All; Section 24: All; Section 25: All; Section 26: All; Section 27: E2; Township 22 South, Range 31 East Section 17: ALL; Section 18: Lots 1,2,3,4, E2W2, E2; Section 19: Lots 1,2,3,4, E2W2, E2; Section 20: All; Section 21: All; Section 28: All; Section 29: All; Section 30: Lots 1,2,3,4, E2W2, E2, Township 20 South, Range 32 East, in the **[97650] WC WILLIAMS SINK; BONE SPRING** currently dedicated to the following well:

30-015-46199	BIG EDDY UNIT 30E QUI GON	102H
30-015-48159	BIG EDDY UNIT 30E QUI-GON	103H
30-015-46244	BIG EDDY UNIT 30 REY	102H
30-015-46196	BIG EDDY UNIT 30E OBI WAN #102H	102H
30-015-48156	BIG EDDY UNIT 30E REY	103H
30-015-46194	BIG EDDY UNIT 30E SKYWALKER	100H
30-015-46195	BIG EDDY UNIT 30E SKYWALKER	101H
30-015-46933	BIG EDDY UNIT 30E SKYWALKER	102H
30-015-46935	BIG EDDY UNIT 30E SKYWALKER	103H
30-015-46937	BIG EDDY UNIT 30E SKYWALKER	104H
30-015-46938	BIG EDDY UNIT 30E SKYWALKER	105H
30-015-46198	BIG EDDY 30E JEDI FEDERAL COM #102H	102H – Standalone Meter
	REMOVE	
30-015-46243	BIG EDDY UNIT 30E ANAKIN #203H	203H Plugged & site released(remove)
30-015-46197	BIG EDDY UNIT 30E ANAKIN #102H	102H Never drilled

XTO Permian Operating, LLC.
Russell Young
6401Holiday Hill Road, Bldg 5
Midland, TX 79707
832-302-5430
Russel.young@exxonmobil.com

(b) The **160.00-acre** of Lease **NMLC0065944** comprised of Section 22: W2NE, W2NW; the **160.00-acre** of Lease **NMLC0065944A** comprised of Section 22: E2NE, E2NW; the **320.00-acre** of Lease **NMLC 0001083** comprised of Section 20: N2; the **240.00-acre** of Lease **NMLC 0004082** comprised of Section 21: W2NE, NW4; the **80.00-acre** of Lease **NMLC 0065874A** comprised of Section 21: E2NE Township 20 South, Range 31 East, in the **[97650] WC WILLIAMS SINK; BONE SPRING** currently dedicated to the following well:

30-015-55795	BIG EDDY UNIT DI 30 WEST 15 20	007H
30-015-55743	BIG EDDY UNIT DI 30 WEST 15 20	008H
30-015-55744	BIG EDDY UNIT DI 30 WEST 15 20	009H

(c) The **40.00-acre** of State Lease **B1-0621-0001** comprised of Section 16: SENE; the **360.00-acre** of State Lease **E0-0264-0007** comprised of Section 16: SE/4; N2NE; SWNE; E2NW; the **240.00-acre** of State Lease **E0-5230-0007** comprised of Section 16: SW/4; W2NW; the **480.00-acre** of Lease **NMNM 0063667** comprised of Section 15: E2; E2W2; the **480.00-acre** of Lease **NMNM 0004082** comprised of Section 17: E2; E2W2; the **320.00-acre** of Lease **NMLC 0070220** comprised of Section 17: W2W2; and comprised of Section 15: W2W2; Township 20 South, Range 31 East, in the **[97650] WC WILLIAMS SINK; BONE SPRING** currently dedicated to the following well:

30-015-55791	BIG EDDY UNIT DI 30 WEST 15 17	001H
30-015-55792	BIG EDDY UNIT DI 30 WEST 15 17	002H
30-015-55796	BIG EDDY UNIT DI 30 WEST 15 17	003H
30-015-55793	BIG EDDY UNIT DI 30 WEST 15 17	004H
30-015-55848	BIG EDDY UNIT DI 30 WEST 15 17	005H
30-015-55794	BIG EDDY UNIT DI 30 WEST 15 17	006H

(b) Pursuant to 19.15.12.10.C(4)(g), *from all future additions of pools, leases or leases and pools to the Big Eddy Unit DI 30 Central Tank Battery* with notice provided only to the owners of interests to be added.

Gas production from these spacing units will be commingled and sold at the CTB, located in the NESE of Section 15, T20S, R31E. XTO plans to use the well test method for allocation of production and measurement purposes. Production will flow from the wellbore to either a test separator or bulk (common) production separator. The test separator will separate the gas, and water. Gas production from the test separator will be metered with a calibrated orifice meter that is manufactured to AGA specifications. Gas production will then be allocated daily based on the most recent individual well tests of gas and water.

Exhibit 1 is a land plat showing XTO's current development plan, well pads, and the central Tank battery ("CTB Site") in the subject area. The plat also identifies the wellbores and lease/spacing unit boundaries.

Exhibit 2 is a completed Application for Surface Commingling (Diverse Ownership) Form C-107-B, that includes a statement from Steven D. Wolfe, Senior Facilities Engineer with XTO, explaining how XTO plans to utilize the well test method and the measurement devices to be utilized, along with a detailed schematic of the surface facilities (Attachment A to the statement).

XTO Permian Operating, LLC.
Russell Young
6401Holiday Hill Road, Bldg 5
Midland, TX 79707
832-302-5430
Russel.young@exxonmobil.com

Exhibit 3 is a C-102 for each of the wells currently permitted or drilled within the existing spacing units.

Ownership is diverse between the above-described spacing units, each of which are either subject to a pooling agreement or a pooling order and are therefore considered "leases" as defined by 19.15.12.7(C) NMAC. **Exhibit 4** is a list of the interest owners (including any owners of royalty or overriding royalty interest) affected by this application, an example of the letters sent by certified mail advising the interest owners that any objections must be filed in writing with the Division within 20 days from the date the Division receives this application, and proof of mailing. A copy of this application has been provided to the Bureau of Land Management since federal lands are involved.

Thank you for your consideration of this application. Please feel free to contact me if you have any questions or need additional information.

Sincerely,

Russell Young

Russell Young
New Mexico Commingle Manager
Permian Business Unit

XTO Permian Operating, LLC.
Russell Young
6401Holiday Hill Road, Bldg 5
Midland, TX 79707
832-302-5430
Russel.young@exxonmobil.com

Russell Young

Received by OCD: 10/27/2025 2:11:00 PM

ExxonMobil

Date: 10/7/2025

Big Eddy Unit DI 30 VRU Battery Lease Map

EDDY COUNTY, NM

Legend

- Gas FMP/Sales Meter
- Oil FMP/Sales Meter
- BATTERY
- BIG EDDY UNIT
- BONESPRING PA NMNM105693911

FEDERAL SURFACE & MINERAL LEASE

- NMLC 0065874A
- NMLC 0065944
- NMLC 0065944A
- NMNM 0001083
- NMLC 0063667
- NMLC 0070220
- NMNM 0004082

STATE SURFACE & MINERAL LEASE

- B16211
- E02647
- E052307

Wells

3001546198 BIG EDDY 30E JEDI FEDERAL COM 102H
3001546199 BIG EDDY UNIT 30E QUI GON 102H
3001548159 BIG EDDY UNIT 30E QUI-GON 103H
3001546244 BIG EDDY UNIT 30 REY 102H
3001548156 BIG EDDY UNIT 30E REY 103H
3001546194 BIG EDDY UNIT 30E SKYWALKER 100H
3001546195 BIG EDDY UNIT 30E SKYWALKER 101H
3001546933 BIG EDDY UNIT 30E SKYWALKER 102H
3001546935 BIG EDDY UNIT 30E SKYWALKER 103H
3001546937 BIG EDDY UNIT 30E SKYWALKER 104H
3001546938 BIG EDDY UNIT 30E SKYWALKER 105H
3001555795 BIG EDDY UNIT DI 30 WEST 15 20 007H
3001555743 BIG EDDY UNIT DI 30 WEST 15 20 008H
3001555744 BIG EDDY UNIT DI 30 WEST 15 20 009H
3001555791 BIG EDDY UNIT DI 30 WEST 15 17 001H
3001555792 BIG EDDY UNIT DI 30 WEST 15 17 002H
3001555796 BIG EDDY UNIT DI 30 WEST 15 17 003H
3001555793 BIG EDDY UNIT DI 30 WEST 15 17 004H
3001555848 BIG EDDY UNIT DI 30 WEST 15 17 005H
3001555794 BIG EDDY UNIT DI 30 WEST 15 17 006H

Location

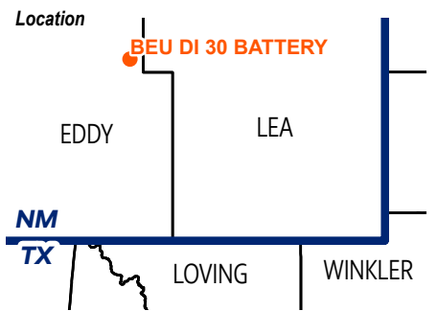

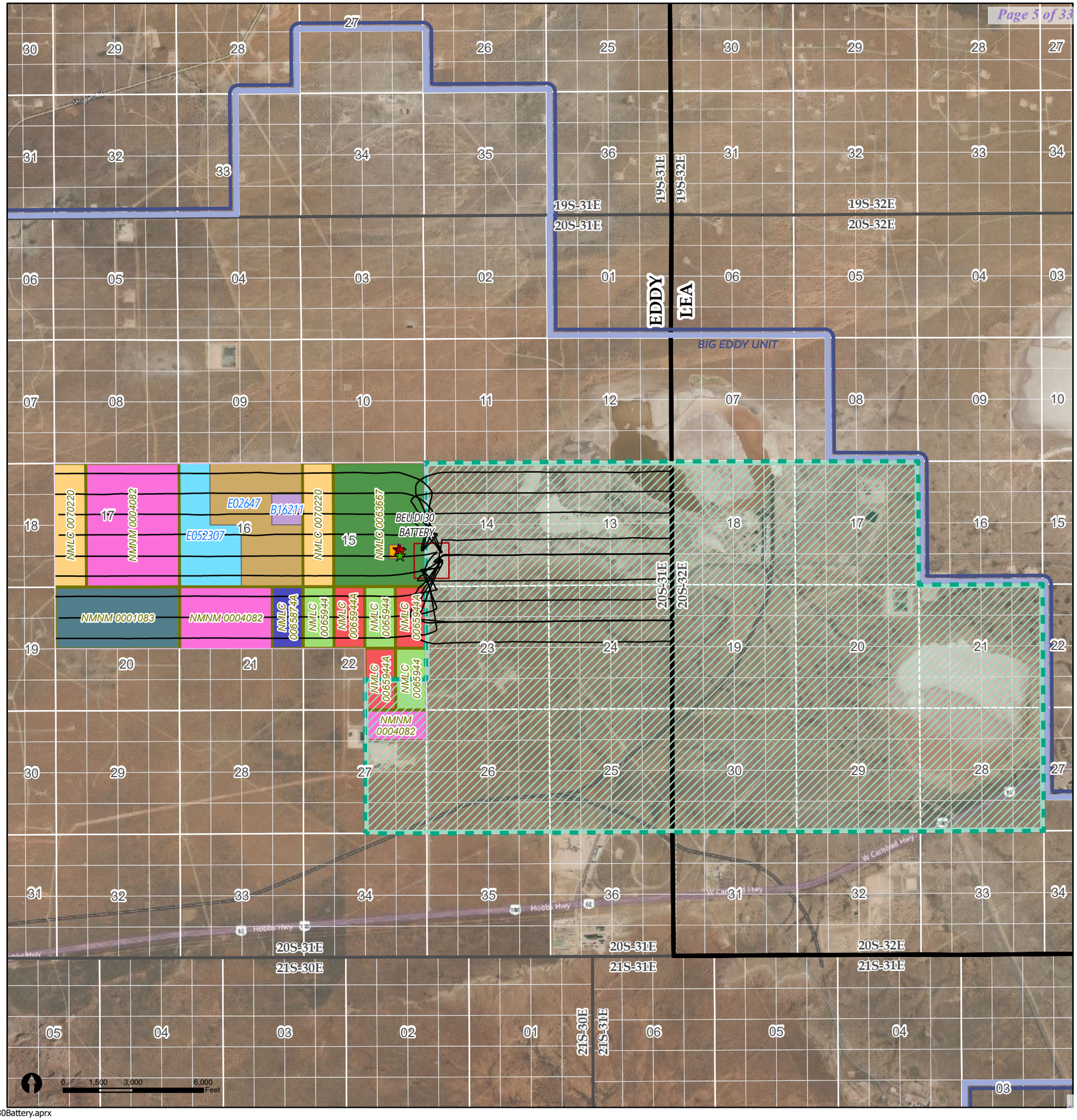

Released to Imaging: 12/23/2025 11:02:43 AM

EXHIBIT 2

Santa Fe Main Office
Phone: (505) 476-3441
General Information
Phone: (505) 629-6116

Online Phone Directory Visit:
https://www.emnrd.nm.gov/ocd/contact-us/

State of New Mexico
Energy, Minerals and Natural Resources Department

OIL CONSERVATION DIVISION
1220 S. St Francis Drive
Santa Fe, New Mexico 87505

Form C-107-B
Revised August 1, 2011

Submit the original application to the Santa Fe office with one copy to the appropriate District Office.

APPLICATION FOR SURFACE COMMINGLING (DIVERSE OWNERSHIP)

OPERATOR NAME: XTO Permian Operating, LLC
OPERATOR ADDRESS: 6401 Holiday Hill Midland, TX 79707
APPLICATION TYPE:

☐ Pool Commingling ☒ Lease Commingling ☐ Pool and Lease Commingling ☐ Off-Lease Storage and Measurement (Only if not Surface Commingled)

LEASE TYPE: ☐ Fee ☐ State ☒ Federal

Is this an Amendment to existing Order? ☐ Yes ☐ No If "Yes", please include the appropriate Order No. _____
Have the Bureau of Land Management (BLM) and State Land office (SLO) been notified in writing of the proposed commingling
☒ Yes ☐ No

(A) POOL COMMINGLING
Please attach sheets with the following information

(1) Pool Names and Codes	Gravities / BTU of Non-Commingled Production	Calculated Gravities / BTU of Commingled Production		Calculated Value of Commingled Production	Volumes
WC Willimas Sink; Bone Spring 97650	45/1159	49/1275		$61.41	
Big Eddy; Wolfcamp (Gas) 72120	45/1159			$3.43	
VRU Flash Gas Only					

(2) Are any wells producing at top allowables? ☐ Yes ☐ No
(3) Has all interest owners been notified by certified mail of the proposed commingling? ☐ Yes ☐ No.
(4) Measurement type: ☐ Metering ☐ Other (Specify)
(5) Will commingling decrease the value of production? ☐ Yes ☐ No If "yes", describe why commingling should be approved

(B) LEASE COMMINGLING
Please attach sheets with the following information

(1) Pool Name and Code. WC WILLIMAS SINK; BONE SPRING [97650]
(2) Is all production from same source of supply? ☒ Yes ☐ No
(3) Has all interest owners been notified by certified mail of the proposed commingling? ☒ Yes ☐ No
(4) Measurement type: ☐ Metering ☒ Other (Specify) WELL TESTING

(C) POOL and LEASE COMMINGLING
Please attach sheets with the following information

(1) Complete Sections A and E.

(D) OFF-LEASE STORAGE and MEASUREMENT
Please attached sheets with the following information

(1) Is all production from same source of supply? ☐ Yes ☐ No
(2) Include proof of notice to all interest owners.

(E) ADDITIONAL INFORMATION (for all application types)
Please attach sheets with the following information

(1) A schematic diagram of facility, including legal location.
(2) A plat with lease boundaries showing all well and facility locations. Include lease numbers if Federal or State lands are involved.
(3) Lease Names, Lease and Well Numbers, and API Numbers.

I hereby certify that the information above is true and complete to the best of my knowledge and belief.

SIGNATURE: Russell Young TITLE: New Mexico Commingle Manager DATE: 10/16/2025

TYPE OR PRINT NAME Russell Young TELEPHONE NO.: 832-302-5430

E-MAIL ADDRESS: russell.young@exxonmobil.com

Big Eddy Unit DI 30 CTB
Facility Statement
VRU-Flash Gas

XTO Permian Operating, LLC. requests approval, pursuant to 43 CFR § 3173.14(a)(1)(iii), to commingle VRU-flash gas only at the Big Eddy Unit DI 30 CTB. This CTB has production from one Participating Area (PA), and ten federal leases. The PA and leases have the same distribution revenue and are at the fixed BLM NRI of 12.5%. The PA and the leases have the same percentage of federal mineral interest except for 40 acres of Fee contained within the lease. These 40 acres represent less than one percent difference. All wells are expected to produce in paying quantities (see table below). XTO is the designated operator; therefore, no operator agreement is required. Since application is being made under 43 CFR § 3173.14(a)(1), a gas analysis is NOT required. FMPs/sales meter are located on federal lands and are "on lease" (See attached Lease Map). No new surface disturbance is needed.

The facility design has common ancillary equipment that includes—vapor recovery units, flares, and a water system. The flash gas will enter the primary gas line after all FMPs / sales meter.

The commingled hydrocarbons between trains due to these ancillary systems will result in de minimis volumes resulting in minimal effect on royalties paid.

Justification for commingling the VRU-flash gas is that pressure of the gas handled in ancillary systems will be boosted to the main sale line pressure by equipment to allow increased pipeline operating efficiency and increase in the reliability of the mechanical systems while reducing the layout for mechanical rotating equipment and associated emission points.

VRU Commingle

The gas FMP / sale meters measure only production from an individual train except for flash gas. Flash gas will be defined as gas recovered through compression. Flash gas will be measured with an FMP. Flare volumes will be measured and allocated back to each train. Flare pilot usage will be allocated back to each train.

ATTACHMENT A

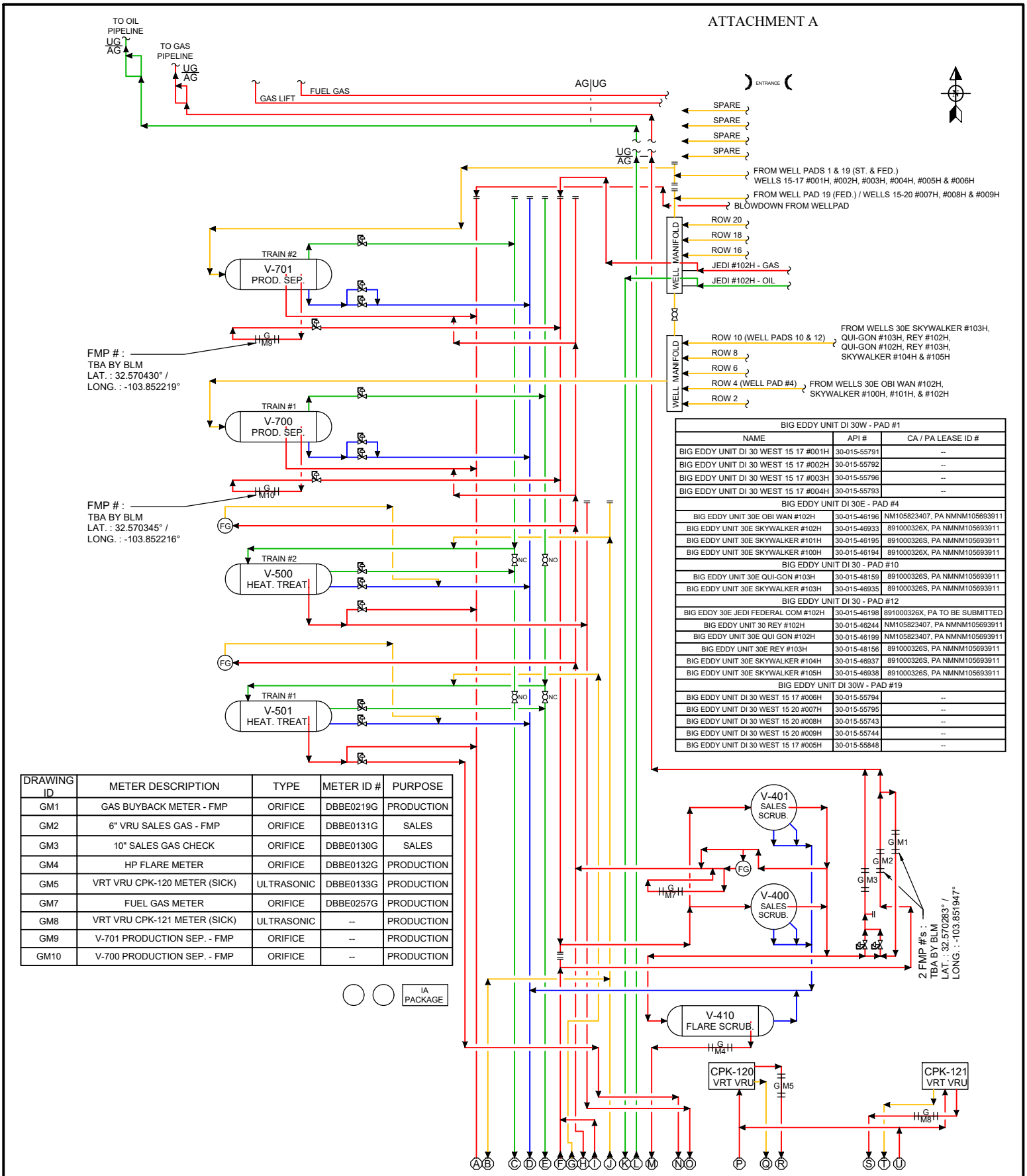

BIG EDDY UNIT DI 30W - PAD #1		
NAME	API #	CA / PA LEASE ID #
BIG EDDY UNIT DI 30 WEST 15 17 #001H	30-015-55791	--
BIG EDDY UNIT DI 30 WEST 15 17 #002H	30-015-55792	--
BIG EDDY UNIT DI 30 WEST 15 17 #003H	30-015-55796	--
BIG EDDY UNIT DI 30 WEST 15 17 #004H	30-015-55793	--
BIG EDDY UNIT DI 30E - PAD #4		
BIG EDDY UNIT 30E OBI WAN #102H	30-015-46196	NM105823407, PA NMNM105693911
BIG EDDY UNIT 30E SKYWALKER #102H	30-015-46933	891000326X, PA NMNM105693911
BIG EDDY UNIT 30E SKYWALKER #101H	30-015-46195	891000326S, PA NMNM105693911
BIG EDDY UNIT 30E SKYWALKER #100H	30-015-46194	891000326X, PA NMNM105693911
BIG EDDY UNIT DI 30 - PAD #10		
BIG EDDY UNIT 30E QUI-GON #103H	30-015-48159	891000326S, PA NMNM105693911
BIG EDDY UNIT 30E SKYWALKER #103H	30-015-46935	891000326S, PA NMNM105693911
BIG EDDY UNIT DI 30 - PAD #12		
BIG EDDY 30E JEDI FEDERAL COM #102H	30-015-46198	891000326X, PA TO BE SUBMITTED
BIG EDDY UNIT 30 REY #102H	30-015-46244	NM105823407, PA NMNM105693911
BIG EDDY UNIT 30E QUI GON #102H	30-015-46199	NM105823407, PA NMNM105693911
BIG EDDY UNIT 30E REY #103H	30-015-48156	891000326S, PA NMNM105693911
BIG EDDY UNIT 30E SKYWALKER #104H	30-015-46937	891000326S, PA NMNM105693911
BIG EDDY UNIT 30E SKYWALKER #105H	30-015-46938	891000326S, PA NMNM105693911
BIG EDDY UNIT DI 30W - PAD #19		
BIG EDDY UNIT DI 30 WEST 15 17 #006H	30-015-55794	--
BIG EDDY UNIT DI 30 WEST 15 20 #007H	30-015-55795	--
BIG EDDY UNIT DI 30 WEST 15 20 #008H	30-015-55743	--
BIG EDDY UNIT DI 30 WEST 15 20 #009H	30-015-55744	--
BIG EDDY UNIT DI 30 WEST 15 17 #005H	30-015-55848	--

DRAWING ID	METER DESCRIPTION	TYPE	METER ID #	PURPOSE
GM1	GAS BUYBACK METER - FMP	ORIFICE	DBBE0219G	PRODUCTION
GM2	6" VRU SALES GAS - FMP	ORIFICE	DBBE0131G	SALES
GM3	10" SALES GAS CHECK	ORIFICE	DBBE0130G	SALES
GM4	HP FLARE METER	ORIFICE	DBBE0132G	PRODUCTION
GM5	VRT VRU CPK-120 METER (SICK)	ULTRASONIC	DBBE0133G	PRODUCTION
GM7	FUEL GAS METER	ORIFICE	DBBE0257G	PRODUCTION
GM8	VRT VRU CPK-121 METER (SICK)	ULTRASONIC	--	PRODUCTION
GM9	V-701 PRODUCTION SEP. - FMP	ORIFICE	--	PRODUCTION
GM10	V-700 PRODUCTION SEP. - FMP	ORIFICE	--	PRODUCTION

Facility Gas Usage	
ROYALTY FREE EQUIPMENT	USAGE
V-500 HEAT. TREAT.	66.7 MCFD
V-501 HEAT. TREAT.	66.7 MCFD
HP & LP FLARE PILOTS	0.6 MCFD

NOTES:
1. HEATER TREATERS USAGE BASED ON MANUFACTURER'S RECOMMENDED SPECIFICATIONS.
2. FLARE PILOTS USAGE BASED ON MANUFACTURER'S RECOMMENDED SPECIFICATIONS.

EMULSION
WATER
OIL
GAS

Revision	Description of Change	Date	By	ENG. APPD. By
0	AS BUILT	10/21/2020	LAD	
1	ADDED WTR PMPS & GUN BBRL.	6/27/2023	CK	
2	AS BUILT / UPDATED	6/25/2025	SB/JLF	
2C	ISSUED FOR COMMINGLE	10/2/2025	JLF	

ExxonMobil

BIG EDDY UNIT DI 30
CENTRAL TANK BATTERY - VESSELS
EDDY COUNTY, NEW MEXICO

LAT.: 32.570084° / LONG.: -103.852125°
USA NMLC0063667 / SEC. 15-T20S-R31E, NESE

SITE FACILITY DIAGRAM - SHEET 1 OF 2

FILE NO. BIG EDDY UNIT DI 30 CTB
REV. No. 2C

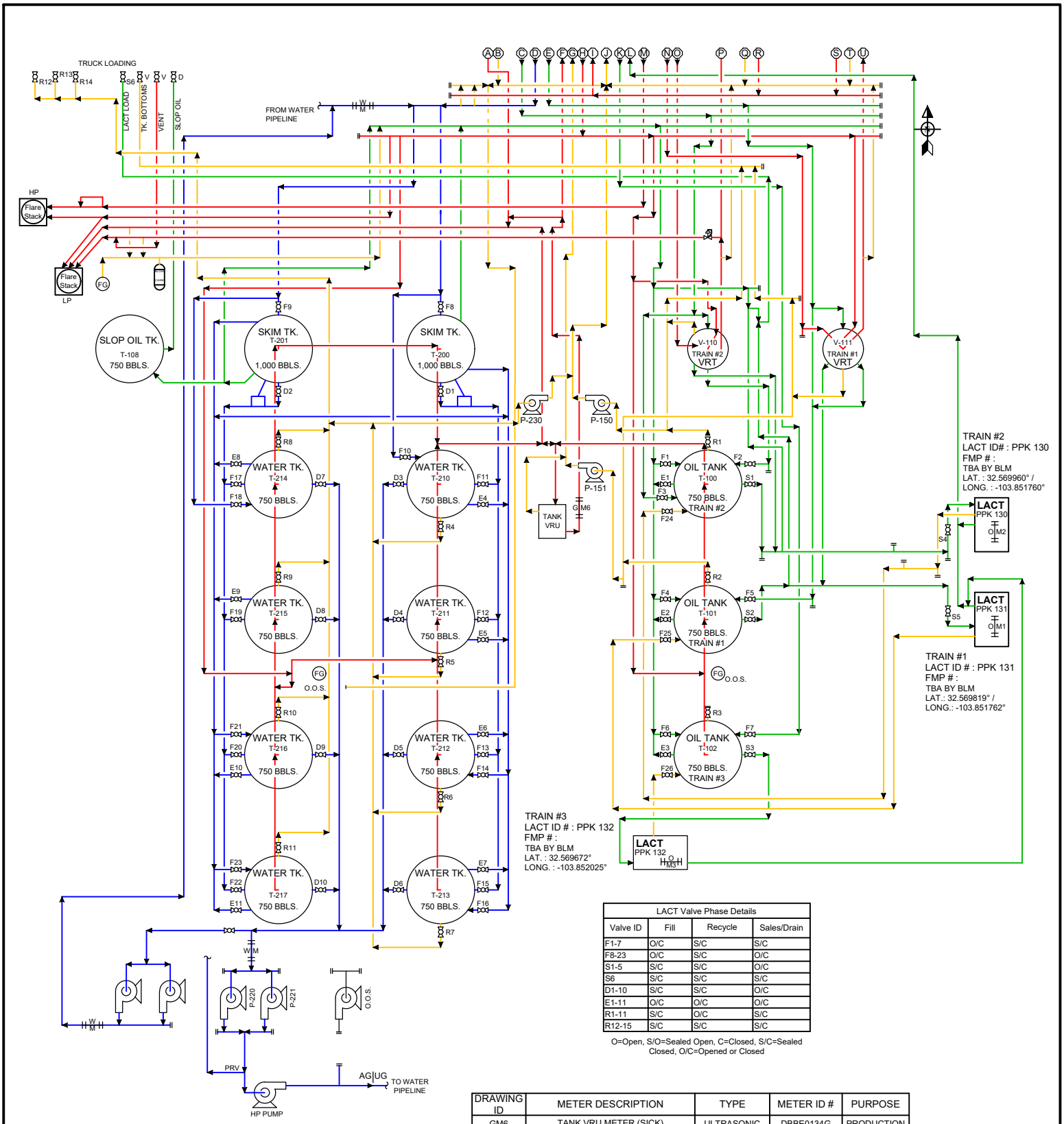

LACT Valve Phase Details			
Valve ID	Fill	Recycle	Sales/Drain
F1-7	O/C	S/C	S/C
F8-23	O/C	S/C	O/C
S1-5	S/C	S/C	O/C
S6	S/C	S/C	S/C
D1-10	S/C	S/C	O/C
E1-11	O/C	O/C	O/C
R1-11	S/C	O/C	S/C
R12-15	S/C	S/C	S/C

O=Open, S/O=Sealed Open, C=Closed, S/C=Sealed Closed, O/C=Opened or Closed

DRAWING ID	METER DESCRIPTION	TYPE	METER ID #	PURPOSE
GM6	TANK VRU METER (SICK)	ULTRASONIC	DBBE0134G	PRODUCTION
OM1	TRAIN #2 LACT UNIT PPK-130 - FMP	CORIOLIS	DBBE0135OL	SALES
OM2	TRAIN #1 LACT UNIT PPK-131 - FMP	CORIOLIS	DBBE0136OL	SALES
OM3	TRAIN #3 LACT UNIT PPK-132 - FMP	CORIOLIS	--	SALES

Facility Gas Usage	
ROYALTY FREE EQUIPMENT	USAGE
V-500 HEAT. TREAT.	66.7 MCFD
V-501 HEAT. TREAT.	66.7 MCFD
HP & LP FLARE PILOTS	0.6 MCFD

NOTES:
1. HEATER TREATERS USAGE BASED ON MANUFACTURER'S RECOMMENDED SPECIFICATIONS.
2. FLARE PILOTS USAGE BASED ON MANUFACTURER'S RECOMMENDED SPECIFICATIONS.

EMULSION
WATER
OIL
GAS

Revision	Description of Change	Date	By	ENG. APPD. By
0	AS BUILT	10/21/2020	LAD	
1	ADDED WTR PMPS & GUN BBRL.	6/27/2023	CK	
2	AS BUILT / UPDATED	6/25/2025	SB/JLF	
2C	ISSUED FOR COMMINGLE	10/2/2025	JLF	

ExxonMobil

BIG EDDY UNIT DI 30
CENTRAL TANK BATTERY - TANKS
EDDY COUNTY, NEW MEXICO

LAT.: 32.570084° / LONG.: -103.852125°
USA NMLC0063667 / SEC. 15-T20S-R31E, NESE

SITE FACILITY DIAGRAM - SHEET 2 OF 2

FILE NO. BIG EDDY UNIT DI 30 CTB
REV. No. 2C

Page 10 of 33

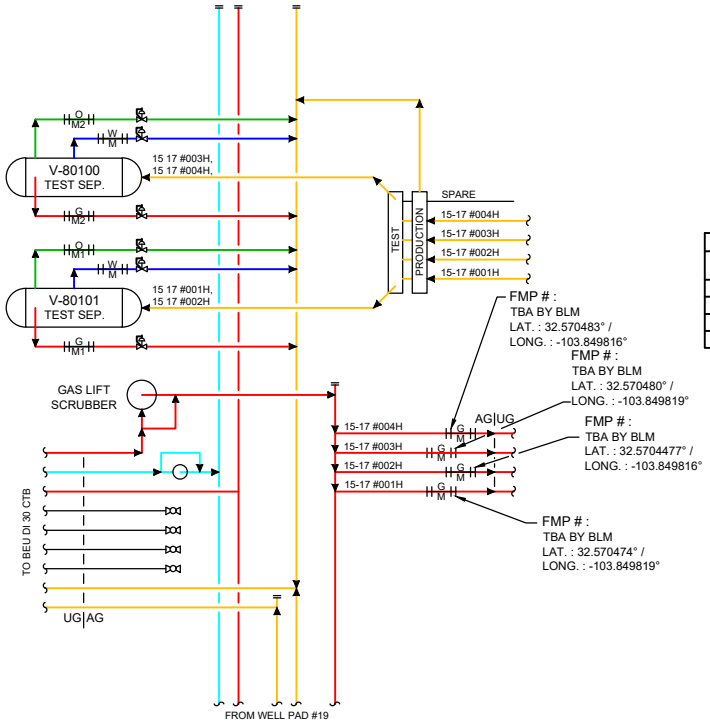

BIG EDDY UNIT DI 30E - PAD 12				
NAME	API #	GAS LIFT METER #	LEASE ID #	CA/PA/LEASE ID #
BIG EDDY UNIT 30 WEST 15 17 #001H	30-015-55791	-- FMP	NMNM068294X	--
BIG EDDY UNIT 30 WEST 15 17 #002H	30-015-55792	-- FMP	NMNM068294X	--
BIG EDDY UNIT 30 WEST 15 17 #003H	30-015-55796	-- FMP	NMNM068294X	--
BIG EDDY UNIT 30 WEST 15 17 #004H	30-015-55793	-- FMP	NMNM068294X	--

DRAWING ID	METER DESCRIPTION	TYPE	METER ID #	PURPOSE
GM1	V-80101 TEST SEPARATOR	ORIFICE	--	ALLOCATION
GM2	V-80100 TEST SEPARATOR	ORIFICE	--	ALLOCATION
OM1	V-80101 TEST SEPARATOR	CORIOLIS	--	ALLOCATION
OM2	V-80100 TEST SEPARATOR	CORIOLIS	--	ALLOCATION

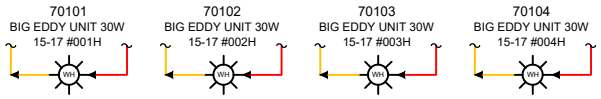

EMULSION
WATER
OIL
GAS
INSTR. AIR

Revision	Description of Change	Date	By	ENG. APPD. By
0	ISSUED FOR COMMINGLE	10/2/2025	JLF	

ExxonMobil

BIG EDDY UNIT DI 30W PAD 1

WELL PAD #1 ROW A LAYOUT
EDDY COUNTY, NEW MEXICO

LAT.: 32.570311° / LONG.: -103.849067°
USA NMLC0063667 / SEC. 15-T20S-R31E,NESE

SITE FACILITY DIAGRAM - SHEET 1 OF 5

FILE NO. BIG EDDY UNIT DI 30 CTB
REV. No. 0

Received by OCD: 10/27/2025 2:11:00 PM
Released to Imaging: 12/23/2025 11:02:43 AM

Page 11 of 33

BIG EDDY UNIT DI 30E - WELLPAD #4				
NAME	API #	GAS LIFT METER #	LEASE ID #	CA/PA/LEASE ID #
BIG EDDY UNIT 30E OBI WAN #102H	30-015-46196	DBBE0312G - FMP	NM105823407	PA NMNM105693911
BIG EDDY UNIT 30E SKYWALKER #102H	30-015-46933	DBBE0322G - FMP	891000326X	PA NMNM105693911
BIG EDDY UNIT 30E SKYWALKER #101H	30-015-46195	DBBE0321G - FMP	891000326S	PA NMNM105693911
BIG EDDY UNIT 30E SKYWALKER #100H	30-015-46194	DBBE0320G - FMP	891000326X	PA NMNM105693911

DRAWING ID	METER DESCRIPTION	TYPE	METER ID #	PURPOSE
GM1	V-80401 TEST SEPARATOR	ORIFICE	DBBE0277G	ALLOCATION
GM2	V-80405 TEST SEPARATOR	ORIFICE	DBBE0276G	ALLOCATION
GM3	V-80406 TEST SEPARATOR	ORIFICE	DBBE0275G	ALLOCATION
GM4	V-80407 TEST SEPARATOR	ORIFICE	DBBE0274G	ALLOCATION
OM1	V-80401 TEST SEPARATOR	CORIOLIS	DBBE0277O	ALLOCATION
OM2	V-80405 TEST SEPARATOR	CORIOLIS	DBBE0276O	ALLOCATION
OM3	V-80406 TEST SEPARATOR	CORIOLIS	DBBE0275O	ALLOCATION
OM4	V-80407 TEST SEPARATOR	CORIOLIS	DBBE0274O	ALLOCATION

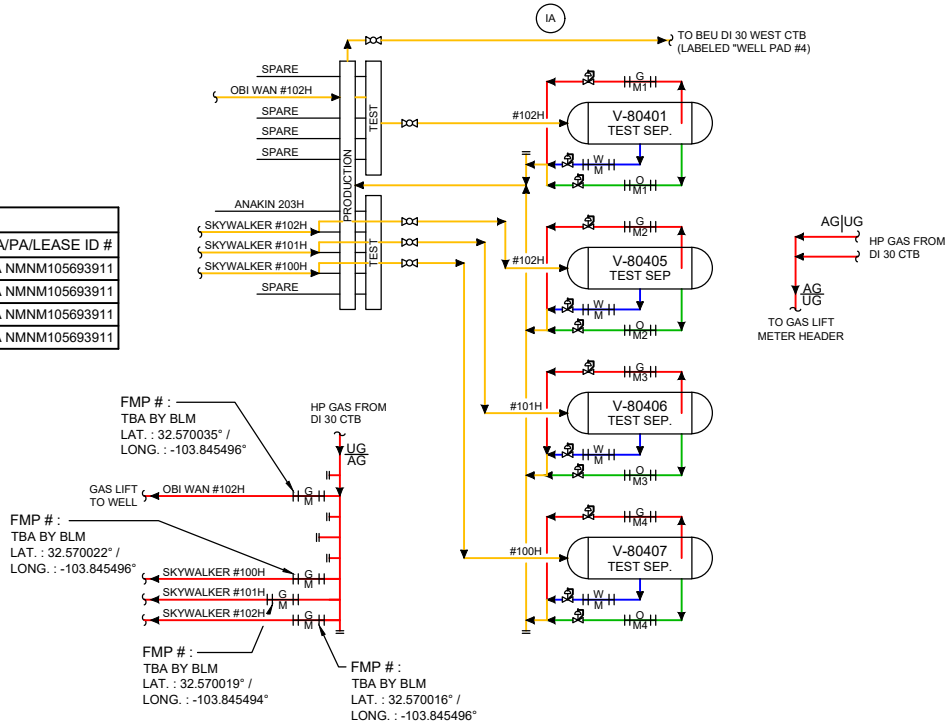

EMULSION
WATER
OIL
GAS

Revision	Description of Change	Date	By	ENG. APPD. By
0	AS BUILT	10/21/2020	LAD	
1	ADDED TEST VESSELS	6/27/2023	CK	
2	AS BUILT / UPDATED	6/25/2025	SB/JLF	
2C	ISSUED FOR COMMINGLE	10/2/2025	JLF	

ExxonMobil

BIG EDDY UNIT DI 30E PAD 4

WELL PAD #4 ROW B LAYOUT
EDDY COUNTY, NEW MEXICO

LAT.: 32.569107° / LONG.: -103.847641°
USA NMLC0063667 / SEC. 14-T20S-R31E, NWSW

SITE FACILITY DIAGRAM - SHEET 2 OF 5

FILE NO. BIG EDDY UNIT DI 30 CTB
REV. No. 2C

Received by OCD: 10/27/2025 2:11:00 PM
Released to Imaging: 12/23/2025 11:02:43 AM

Page 12 of 33

DRAWING ID	METER DESCRIPTION	TYPE	METER ID #	PURPOSE
GM1	V-81001 TEST SEPARATOR	ORIFICE	DBBE0263G	ALLOCATION
GM2	V-81000 TEST SEPARATOR	ORIFICE	DBBE0262G	ALLOCATION
OM1	V-81001 TEST SEPARATOR	CORIOLIS	DBBE0263O	ALLOCATION
OM2	V-81000 TEST SEPARATOR	CORIOLIS	DBBE0262O	ALLOCATION

BIG EDDY UNIT DI 30E - WELLPAD #10				
NAME	API #	GAS LIFT METER #	LEASE ID #	CA/PA/LEASE ID #
BIG EDDY UNIT 30E QUI-GON #103H	30-015-48159	DBBE0315G - FMP	891000326S	PA NMNM105693911
BIG EDDY UNIT 30E SKYWALKER #103H	30-015-46935	DBBE0302G - FMP	891000326S	PA NMNM105693911

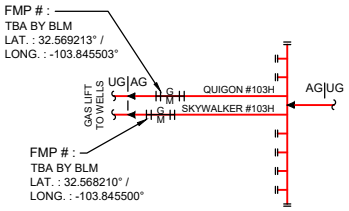

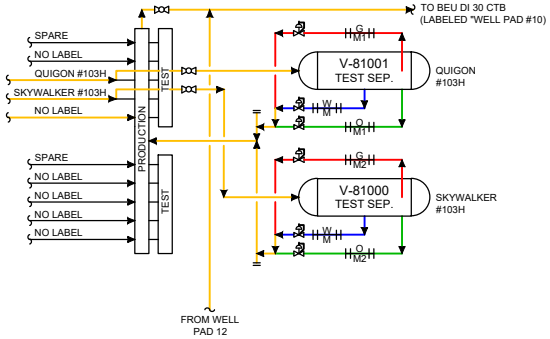

EMULSION
WATER
OIL
GAS

Revision	Description of Change	Date	By	ENG. APPD. By
0	AS BUILT	10/21/2020	LAD	
1	ADDED TEST VESSELS	6/27/2023	CK	
2	AS BUILT / UPDATED	6/25/2025	SB/JLF	
2C	ISSUED FOR COMMINGLE	10/2/2025	JLF	

ExxonMobil

BIG EDDY UNIT DI 30E PAD 10

WELL PAD #10 ROW E LAYOUT
EDDY COUNTY, NEW MEXICO

LAT.: 32.569107° / LONG.: -103.847641°
USA NMLC0063667 / SEC. 14-T20S-R31E, NWSW

SITE FACILITY DIAGRAM - SHEET 3 OF 5

FILE NO. BIG EDDY UNIT DI 30 CTB
REV. No. 2C

Received by OCD: 10/27/2025 2:11:00 PM
Released to Imaging: 12/23/2025 11:02:43 AM

Page 13 of 33

Received by OCD: 10/27/2025 2:11:00 PM

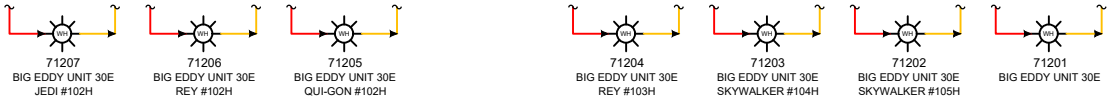

BIG EDDY UNIT DI 30E - PAD 12				
NAME	API #	GAS LIFT METER #	LEASE ID #	CA/PA/LEASE ID #
BIG EDDIE UNIT 30E JEDI #102H	30-015-46198	DBBE0246G - FMP	891000326X	PA TO BE SUBMITTED
BIG EDDY UNIT 30E REY #102H	30-015-46244	DBBE0305G - FMP	NM105823407	PA NMNM105693911
BIG EDDY UNIT 30E QUI GON #102H	30-015-46199	DBBE0323G - FMP	NM105823407	PA NMNM105693911
BIG EDDY UNIT 30E REY #103H	30-015-48156	DBBE0273G - FMP	891000326S	PA NMNM105693911
BIG EDDY UNIT 30E SKYWALKER #104H	30-015-46937	DBBE0324G - FMP	891000326S	PA NMNM105693911
BIG EDDY UNIT 30E SKYWALKER #105H	30-015-46938	DBBE0314G - FMP	891000326S	PA NMNM105693911

DRAWING ID	METER DESCRIPTION	TYPE	METER ID #	PURPOSE
GM1	V-81200 TEST SEPARATOR	ORIFICE	DBBE0291G	ALLOCATION
GM2	V-81201 TESTSEPARATOR	ORIFICE	DBBE0292G	ALLOCATION
GM3	V-81202 TEST SEPARATOR	ORIFICE	DBBE0293G	ALLOCATION
GM4	V-81203 TEST SEPARATOR	ORIFICE	DBBE0294G	ALLOCATION
GM5	V-81204 TEST SEPARATOR - TRAIN #3 FMP	ORIFICE	DBBE0264G	SALES
OM1	V-81200 TEST SEPARATOR	CORIOLIS	DBBE0291O	ALLOCATION
OM2	V-81201 TEST SEPARATOR	CORIOLIS	DBBE0292O	ALLOCATION
OM3	V-81202 TEST SEPARATOR	CORIOLIS	DBBE0293O	ALLOCATION
OM4	V-81203 TEST SEPARATOR	CORIOLIS	DBBE0294O	ALLOCATION
OM5	V-81204 TEST SEPARATOR	CORIOLIS	DBBE0264O	ALLOCATION

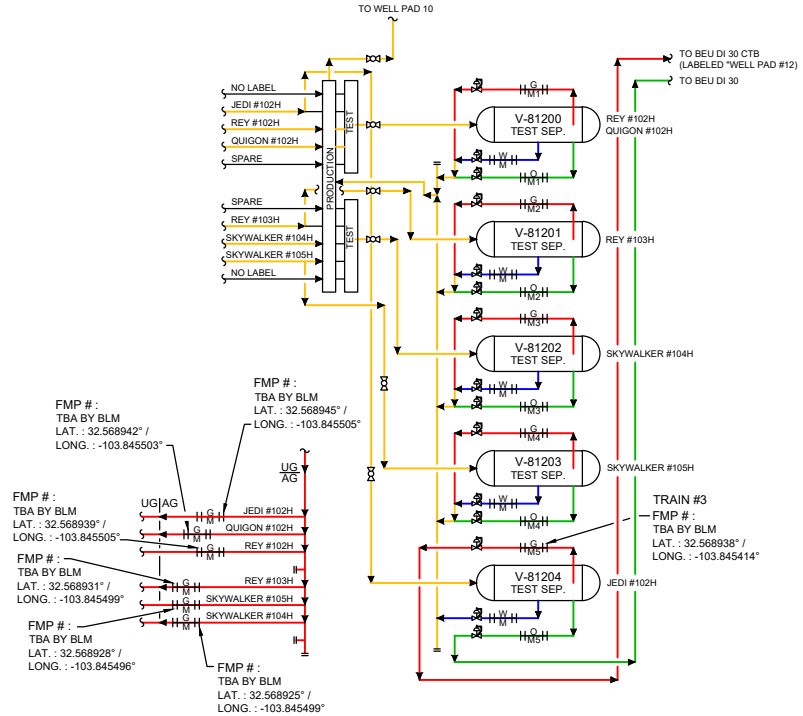

EMULSION
WATER
OIL
GAS

Revision	Description of Change	Date	By	ENG. APPD. By
0	AS BUILT	10/21/2020	LAD	
1	ADDED TEST VESSELS	6/27/2023	CK	
2	AS BUILT / UPDATED	6/25/2025	SB/JLF	
2C	ISSUED FOR COMMINGLE	10/2/2025	JLF	

ExxonMobil

BIG EDDY UNIT DI 30E PAD 12

WELL PAD #12 ROW F LAYOUT
EDDY COUNTY, NEW MEXICO

LAT.: 32.569107° / LONG.: -103.847641°
USA NMLC0063667 / SEC. 14-T20S-R31E, NWSW

SITE FACILITY DIAGRAM - SHEET 4 OF 5

FILE NO. BIG EDDY UNIT DI 30 CTB
REV. No. 2C

Released to Imaging: 12/23/2025 11:02:43 AM

Page 14 of 33

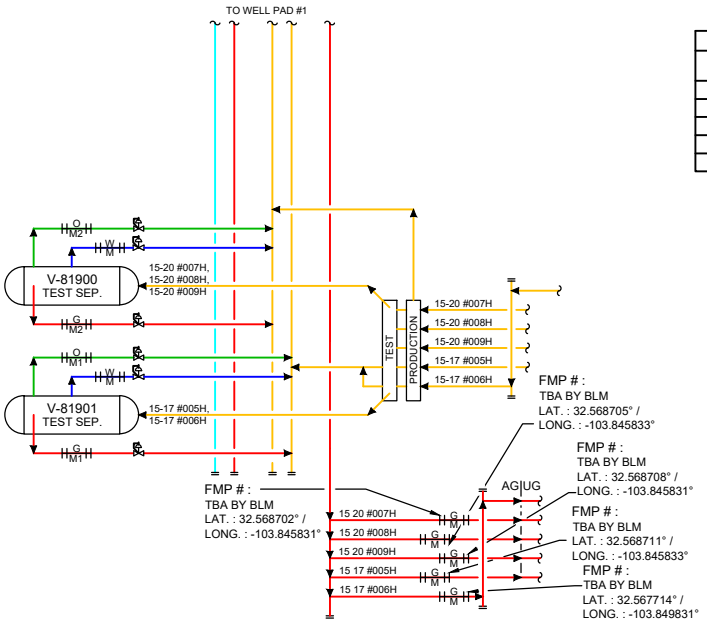

BIG EDDY UNIT DI 30E - PAD 12				
NAME	API #	GAS LIFT METER #	LEASE ID #	CA/PA/LEASE ID #
BIG EDDY UNIT 30 WEST 15 17 #006H	30-015-55794	-- FMP	NMNM068294X	--
BIG EDDY UNIT 30 WEST 15 20 #007H	30-015-55795	-- FMP	NMNM068294X	--
BIG EDDY UNIT 30 WEST 15 20 #008H	30-015-55743	-- FMP	NMNM068294X	--
BIG EDDY UNIT 30 WEST 15 20 #009H	30-015-55744	-- FMP	NMNM068294X	--
BIG EDDY UNIT 30 WEST 15 17 #005H	30-015-55848	-- FMP	NMNM068294X	--

DRAWING ID	METER DESCRIPTION	TYPE	METER ID #	PURPOSE
GM1	V-81901 TEST SEPARATOR	ORIFICE	--	ALLOCATION
GM2	V-81900 TEST SEPARATOR	ORIFICE	--	ALLOCATION
OM1	V-81901 TEST SEPARATOR	CORIOLIS	--	ALLOCATION
OM2	V-81900 TEST SEPARATOR	CORIOLIS	--	ALLOCATION

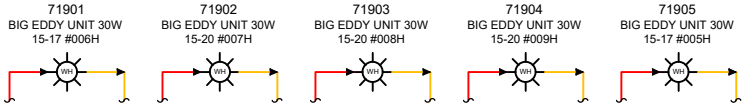

EMULSION
WATER
OIL
GAS
INSTR. AIR

Revision	Description of Change	Date	By	ENG. APPD. By
0	ISSUED FOR COMMINGLE	10/2/2025	JLF	

ExxonMobil

BIG EDDY UNIT DI 30W PAD 19

WELL PAD #19 ROW J LAYOUT
EDDY COUNTY, NEW MEXICO

LAT.: 32.569107° / LONG.: -103.847641°
USA NMLC0063667 / SEC. 14-T20S-R31E, SESE

SITE FACILITY DIAGRAM - SHEET 5 OF 5

FILE NO. BIG EDDY UNIT DI 30 CTB
REV. No. 0

Received by OCD: 10/27/2025 2:11:00 PM

Released to Imaging: 12/23/2025 11:02:43 AM

October 15, 2025

CERTIFIED MAIL
RETURN RECEIPT REQUESTED

TO: ALL AFFECTED PARTIES

Re: Application of XTO Permian Operating, LLC for administrative approval to surface commingle (lease) oil and gas production, off-lease storage and measure from leases comprised of Sections 15, 20, 21, and 22 Township 20 South, Range 31 East, NMPM, and participating area (PA) comprised of Sections 13, 14, 23, and 24; Eddy County, New Mexico.

Re: Application of XTO Permian Operating, LLC for administrative approval to surface commingle VRU-Flash gas[1] from participating areas and lease comprised of Sections 13, 14, 15, 16, 17, 20, 21, 22, 23 and 24 of Township 20 South, Range 31 East, Edd County, New Mexico (the "Lands")

To Whom It May Concern:

Enclosed is a copy of the above-referenced application, which was filed with the New Mexico Oil Conservation Division on this date. Any objection to this application must be filed in writing within twenty (20) days from the date this application is received by the Division's Santa Fe office located at 1220 South St. Francis Drive, Santa Fe, New Mexico, 87505. If no objection is received within this twenty-day period, this application may be approved administratively by the Division.

If you have any questions about this application, please contact the following:

Russell Young
XTO Permian Operating, LLC
(832)302-5430
russell.young@exxonmobil.com

Sincerely,

Russell Young

Russell Young
New Mexico Commingle Manager
Permian Business Unit

XTO Permian Operating, LLC.
Russell Young
6401Holiday Hill Road, Bldg 5
Midland, TX 79707
832-302-5430
Russell.young@exxonmobil.com

BEU DI 30 - POSTAL DELIVERY LIST				
RECIEPT #	NAME	ADDRESS	ADDRESS	NOTIFICATION DATE
9589 0710 5270 1533 1764 50	SARGAR LLC	101 S 4TH ST	ARTESIA NM 88210	10/16/2025
9589 0710 5270 1533 1764 67	BRENDA KAY VINCENT	10107 COUNTY ROAD 1150	LOOKEBA OK 73053	10/16/2025
9589 0710 5270 1533 1761 15	MARILYN MIMI RITCHEY	10442 NAPOLI PL NW	ALBUQUERQUE NM 87114	10/16/2025
9589 0710 5270 1533 1761 22	MATTHEW CARSON COTTINGHAM MILES	111 SHERATON DR	SAN ANTONIO TX 78209	10/16/2025
9589 0710 5270 1533 1764 74	JENNIE VUKSICH	11401 SAN FRANCISCO RD NE	ALBUQUERQUE NM 87122	10/16/2025
9589 0710 5270 1533 1764 81	JULIA TERRI WELCH	11525 LINDSEY GARDEN DR	TYLER TX 75709	10/16/2025
9589 0710 5270 1533 1764 98	SANDERS THOMAS WELCH	129 WRANGLER RD	ROSWELL NM 88201	10/16/2025
9589 0710 5270 1533 1765 04	WEST BEND ENERGY PARTNERS LLC	1320 S UNIVERSITY DR SUITE 701	FORT WORTH TX 76107	10/16/2025
9589 0710 5270 1533 1765 11	ZELMA MARTHA HUBBARD REUTER	13908 W OKC RENO ST	EL RENO OK 73036	10/16/2025
9589 0710 5270 1533 1765 28	CHEVRON U.S.A. INC	1400 SMITH STREET	HOUSTON TX 77002	10/16/2025
9589 0710 5270 1533 1765 35	HARRY A. MILLER, III	1402 FOXWOOD COVE	AUSTIN TX 78704	10/16/2025
9589 0710 5270 1533 1765 42	JOE ALLISON BATES	1407 NORTH CANAL ST	CARLSBAD NM 88220	10/16/2025
9589 0710 5270 1533 1765 59	SIERRA ENERGY ROYALTIES, LLC	16400 DALLAS PARKWAY, SUITE 400	DALLAS TX 75248	10/16/2025
9589 0710 5270 1533 1765 66	RACHELLE ARGYLE	167369 7 MILE RD	MARLOW OK 73055	10/16/2025
9589 0710 5270 1533 1765 73	LJA CHARITABLE INVESTMENTS, LLC	1717 WEST LOOP SOUTH SUITE 180	HOUSTON TX 77027	10/16/2025
9589 0710 5270 1533 1765 80	CHARLES WILLIAM HIVELY	17284 ROUND LAKE RD	EDEN PRAIRIE MN 55346	10/16/2025
9589 0710 5270 1533 1765 97	BRYAN WINSTON WELCH	1764 S PAIGE CREEK PL	TUCSON AZ 85748	10/16/2025
9589 0710 5270 1533 1766 03	ROBERT KEITH LOVELACE &	19887 HWY 33	HAMMON OK 73650	10/16/2025
7019 1640 0001 6436 3771 (FROM 2020)	2016 HYATT BASS FAM TR	201 MAIN ST STE 2700	FORT WORTH TX 76102	1/31/2020
7019 1640 0001 6436 3771 (FROM 2020)	2016 SAMANTHA BASS FAM TR	201 MAIN ST STE 2700	FORT WORTH TX 76102	1/31/2020
7019 1640 0001 6436 3771 (FROM 2020)	CHRISTOPHER MADDOX BASS	201 MAIN ST STE 2750	FORT WORTH TX 76102	1/31/2020
7019 1640 0001 6436 3771 (FROM 2020)	THE BASS SICKEL 2016 CHILDRENS TR	201 MAIN STREET SUITE 2300	FORT WORTH TX 76102	1/31/2020
7019 1640 0001 6436 3771 (FROM 2020)	2016 SAMANTHA BASS FAMILY TRUST	201 MAIN STREET SUITE 2700	FORT WORTH TX 76102	1/31/2020
7019 1640 0001 6436 3771 (FROM 2020)	2016 HYATT BASS FAMILY TRUST	201 MAIN STREET SUITE 2700	FORT WORTH TX 76102	1/31/2020
7019 1640 0001 6436 3771 (FROM 2020)	ANNE CHANDLER BASS EVANS	201 MAIN STREET SUITE 2700	FORT WORTH TX 76102	1/31/2020
7019 1640 0001 6436 3771 (FROM 2020)	BMT I BPEOR NM, LLC	201 MAIN STREET SUITE 2700	FORT WORTH TX 76102	1/31/2020
7019 1640 0001 6436 3771 (FROM 2020)	BMT II BPEOR NM, LLC	201 MAIN STREET SUITE 2700	FORT WORTH TX 76102	1/31/2020
7019 1640 0001 6436 3771 (FROM 2020)	CTAM O AND GAS LLC	201 MAIN STREET SUITE 2700	FORT WORTH TX 76102	1/31/2020
7019 1640 0001 6436 3771 (FROM 2020)	CTV-CTAM BPEOR NM, LLC	201 MAIN STREET SUITE 2700	FORT WORTH TX 76102	1/31/2020
7019 1640 0001 6436 3771 (FROM 2020)	CTV-LMB I BPEOR NM, LLC	201 MAIN STREET SUITE 2700	FORT WORTH TX 76102	1/31/2020
7019 1640 0001 6436 3771 (FROM 2020)	CTV-LMB II BPEOR NM, LLC	201 MAIN STREET SUITE 2700	FORT WORTH TX 76102	1/31/2020
7019 1640 0001 6436 3771 (FROM 2020)	CTV-SRB I BPEOR NM, LLC	201 MAIN STREET SUITE 2700	FORT WORTH TX 76102	1/31/2020
7019 1640 0001 6436 3771 (FROM 2020)	CTV-SRB I BPEOR NM, LLC	201 MAIN STREET SUITE 2700	FORT WORTH TX 76102	1/31/2020
7019 1640 0001 6436 3771 (FROM 2020)	CTV-SRB II BPEOR NM, LLC	201 MAIN STREET SUITE 2700	FORT WORTH TX 76102	1/31/2020
7019 1640 0001 6436 3771 (FROM 2020)	CTV-SRB II BPEOR NM, LLC	201 MAIN STREET SUITE 2700	FORT WORTH TX 76102	1/31/2020
7019 1640 0001 6436 3771 (FROM 2020)	GC OIL AND GAS LLC	201 MAIN STREET SUITE 2700	FORT WORTH TX 76102	1/31/2020
7019 1640 0001 6436 3771 (FROM 2020)	Goliad-LMB I BPEOR NM, LLC	201 MAIN STREET SUITE 2700	FORT WORTH TX 76102	1/31/2020
7019 1640 0001 6436 3771 (FROM 2020)	Goliad-LMB II BPEOR NM, LLC	201 MAIN STREET SUITE 2700	FORT WORTH TX 76102	1/31/2020
7019 1640 0001 6436 3771 (FROM 2020)	Goliad-SRB I BPEOR NM, LLC	201 MAIN STREET SUITE 2700	FORT WORTH TX 76102	1/31/2020
7019 1640 0001 6436 3771 (FROM 2020)	Goliad-SRB II BPEOR NM, LLC	201 MAIN STREET SUITE 2700	FORT WORTH TX 76102	1/31/2020
7019 1640 0001 6436 3771 (FROM 2020)	KEYSTONE (CTAM) BPEOR NM, LLC	201 MAIN STREET SUITE 2700	FORT WORTH TX 76102	1/31/2020
7019 1640 0001 6436 3771 (FROM 2020)	KEYSTONE (RMB) BPEOR NM, LLC	201 MAIN STREET SUITE 2700	FORT WORTH TX 76102	1/31/2020
7019 1640 0001 6436 3771 (FROM 2020)	LMB I BPEOR NM, LLC	201 MAIN STREET SUITE 2700	FORT WORTH TX 76102	1/31/2020
7019 1640 0001 6436 3771 (FROM 2020)	LMB II BPEOR NM, LLC	201 MAIN STREET SUITE 2700	FORT WORTH TX 76102	1/31/2020

7019 1640 0001 6436 3771 (FROM 2020)	LMB RSB GST EXEMPT DYNASTY 2016 TR	201 MAIN STREET SUITE 2700	FORT WORTH TX 76102	1/31/2020
7019 1640 0001 6436 3771 (FROM 2020)	LMB RSB NON EXEMPT 2016 TRUST	201 MAIN STREET SUITE 2700	FORT WORTH TX 76102	1/31/2020
7019 1640 0001 6436 3771 (FROM 2020)	LMB/RSB GST EXEMPT DYNASTY 2016 TR	201 MAIN STREET SUITE 2700	FORT WORTH TX 76102	1/31/2020
7019 1640 0001 6436 3771 (FROM 2020)	SRB I BPEOR NM, LLC	201 MAIN STREET SUITE 2700	FORT WORTH TX 76102	1/31/2020
7019 1640 0001 6436 3771 (FROM 2020)	SRB II BPEOR NM, LLC	201 MAIN STREET SUITE 2700	FORT WORTH TX 76102	1/31/2020
7019 1640 0001 6436 3771 (FROM 2020)	THE PHILECOLOGY FOUNDATION	201 MAIN STREET SUITE 2700	FORT WORTH TX 76102	1/31/2020
7019 1640 0001 6436 3771 (FROM 2020)	THRU LINE BPEOR NM, LLC	201 MAIN STREET SUITE 2700	FORT WORTH TX 76102	1/31/2020
7019 1640 0001 6436 3771 (FROM 2020)	TIMOTHY RICHARDSON BASS	201 MAIN STREET SUITE 2700	FORT WORTH TX 76102	1/31/2020
7019 1640 0001 6436 3771 (FROM 2020)	WD I BPEOR NM, LLC	201 MAIN STREET SUITE 2700	FORT WORTH TX 76102	1/31/2020
7019 1640 0001 6436 3771 (FROM 2020)	WD II BPEOR NM, LLC	201 MAIN STREET SUITE 2700	FORT WORTH TX 76102	1/31/2020
9589 0710 5270 1533 1766 10	ELLEN MARION SKYLARK	20350 MARSH CREEK RD	BRENTWOOD CA 94513	10/16/2025
9589 0710 5270 1533 1766 27	WING RESOURCES III, LLC	2100 MCKINNEY AVE., SUITE 1540	DALLAS TX 75201	10/16/2025
9589 0710 5270 1533 1766 34	WING RESOURCES IV, LLC	2100 MCKINNEY AVE., SUITE 1540	DALLAS TX 75201	10/16/2025
9589 0710 5270 1533 1766 41	WING RESOURCES VI, LLC	2100 MCKINNEY AVE., SUITE 1540	DALLAS TX 75201	10/16/2025
9589 0710 5270 1533 1766 58	WING RESOURCES VII, LLC	2100 MCKINNEY AVE., SUITE 1540	DALLAS TX 75201	10/16/2025
9589 0710 5270 1533 1766 65	ELK RANGE ROYALTIES II, LP	2110 FARRINGTON STREET	DALLAS TX 75207	10/16/2025
9589 0710 5270 1533 1766 72	XTO HOLDINGS LLC-RU5737	22777 SPRINGWOODS VILLAGE PKWA	SPRING TX 77389	10/16/2025
9589 0710 5270 1533 1766 89	XTO DELAWARE BASIN LLC-RU5766	22777 SPRINGWOODS VILLAGE PKWY	SPRING TX 77389	10/16/2025
9589 0710 5270 1533 1766 96	BRANDY M ROBERTS	2501 LAKEWOOD DR	CHICKASHA OK 73018	10/16/2025
9589 0710 5270 1533 1767 02	PERPETUAL RESOURCE ASSETS, LLC	2527 FAIRMONT STREET	DALLAS TX 75201	10/16/2025
9589 0710 5270 1533 1767 19	PALAMAR ENTERPRISES LLC	2655 BECKY AVE	MINDEN NV 89423	10/16/2025
9589 0710 5270 1533 1767 26	WALLACE W IRWIN PROPERTIES LLC	270 VILLAGE DRIVE APT 1427	DOWNERS GROVE IL 60516	10/16/2025
9589 0710 5270 1533 1767 33	ARICKA L GREEN	2714 COUNTY ST 2831	CHICKASHA OK 73018	10/16/2025
9589 0710 5270 1533 1767 40	DANNY ALLEN BARRETT	291 OAK ARBOR LN	COLDSPRING TX 77331	10/16/2025
9589 0710 5270 1533 1767 57	MICHAEL IRVIN WELCH, JR.	2912 138TH ST	LUBBOCK TX 79423	10/16/2025
9589 0710 5270 1533 1767 64	NEW MEXICO COMMISSIONER OF PUBLIC LANDS - NM State Land Office	310 OLD SANTA FE TRAIL	SANTA FE 87501	10/16/2025
9589 0710 5270 1533 1767 71	IMPERIAL MINERALS, LLC	3100 QUAIL CREEK ROAD	OKLAHOMA CITY OK 73120	10/16/2025
9589 0710 5270 1533 1767 88	JOHN DREW MILLER	340 E PARK DR	KELLOGG ID 83837	10/16/2025
9589 0710 5270 1533 1767 95	ICON MINERALS LLC	3515 DURNESS WAY	HOUSTON TX 77025	10/16/2025
9589 0710 5270 1533 1768 01	TRAVIS KELLY MELLARD	3620 JOSH LN	AUSTIN TX 78730	10/16/2025
9589 0710 5270 1533 1768 18	MSH FAMILY REAL ESTATE PARTNERSHIP II, LLC	4143 MAPLE AVENUE, SUITE 500	DALLAS TX 75201	10/16/2025
9589 0710 5270 1533 1768 25	SMP SIDECAR TITAN MINERAL HOLDINGS, LP	4143 MAPLE AVENUE, SUITE 500	DALLAS TX 75201	10/16/2025
9589 0710 5270 1533 1768 32	SMP TITAN FLEX, LP	4143 MAPLE AVENUE, SUITE 500	DALLAS TX 75201	10/16/2025
9589 0710 5270 1533 1768 49	SMP TITAN MINERAL HOLDING, LP	4143 MAPLE AVENUE, SUITE 500	DALLAS TX 75201	10/16/2025
9589 0710 5270 1533 1768 56	SARA ARN	4308 S HASSETT	MESA AZ 85212	10/16/2025
9589 0710 5270 1533 1768 63	ROGER KENT HALDEMAN	5 HERITAGE RD	EDGEWOOD NM 87015	10/16/2025
9589 0710 5270 1533 1768 70	LEA ANNE C KOCH	500 MILL CREEK CT	ROSEVILLE CA 95747	10/16/2025
9589 0710 5270 1533 1768 87	SLASH EXPLORATION LIMITED PARTNERSHIP	500 NORTH MAIN, SUITE 200	ROSWELL NM 88201	10/16/2025
9589 0710 5270 1533 1768 94	COG OPERATING, LLC	600 W. ILLINOIS AVE.	MIDLAND TX 79701	10/16/2025
9589 0710 5270 1533 1769 00	CONCHO OIL & GAS, LLC	600 W. ILLINOIS AVE.	MIDLAND TX 79701	10/16/2025

9589 0710 5270 1533 1769 17	MARATHON OIL PERMIAN, LLC	600 W. ILLINOIS AVE.	MIDLAND TX 79701	10/16/2025
9589 0710 5270 1533 1769 24	PHILLIPS PETROLEUM COMPANY	600 W. ILLINOIS AVE.	MIDLAND TX 79701	10/16/2025
9589 0710 5270 1533 1769 31	MAGNUM HUNTER PRODUCTION, INC.	6001 DEAUVILLE BLVD., SUITE N.3.047	MIDLAND TX 79706	10/16/2025
9589 0710 5270 1533 1769 48	BUREAU OF LAND MANAGEMENT ATTN: JONATHAN SHEPARD	620 E GREENE ST.	CARLSBAD NM 88220	10/16/2025
9589 0710 5270 1533 1769 55	EMMA LOU HARDIN	740405 S 3350 RD	PERKINS OK 74059	10/16/2025
9589 0710 5270 1533 1769 62	GEORGETTE C. NICHOLS	770 BOYLSTON STREET	BOSTON MA 12199	10/16/2025
9589 0710 5270 1533 1769 79	MMS BRENHAM FEDERAL	810 HOUSTON STREET	FORT WORTH TX 76102	10/16/2025
9589 0710 5270 1533 1769 86	MARGARET DELL BRIDGES	8130 CEDEL DRIVE	HOUSTON TX 77055	10/16/2025
9589 0710 5270 1533 1769 93	MELANIE MILES WALTERS	8815 TOWANA TRL	AUSTIN TX 78736	10/16/2025
9589 0710 5270 1533 1770 06	MARGARET ANNE MILLER CARRICO	C/O PLAINS CAPITAL BANK 2705 BEE CAVES ROAD	AUSTIN TX 78745	10/16/2025
9589 0710 5270 1533 1770 13	SHOW GOAT CAPITAL, L.P.	P.O. BOX 50576	AUSTIN TX 78763	10/16/2025
9589 0710 5270 1533 1770 20	CLAIRE ANN IVERSON REV LIV TR	PO BOX 10508	MIDLAND TX 797602	10/16/2025
9589 0710 5270 1533 1770 37	EGP REVOCABLE LIVING TRUST	PO BOX 10508	MIDLAND TX 797602	10/16/2025
9589 0710 5270 1533 1770 44	KIP REVOCABLE LIVING TRUST	PO BOX 10508	MIDLAND TX 797602	10/16/2025
9589 0710 5270 1533 1770 51	SIEGFRIED JAMES IVERSON III REV LIV TR	PO BOX 10508	MIDLAND TX 797602	10/16/2025
9589 0710 5270 1533 1770 68	TIG PROPERTIES LP	PO BOX 10508	MIDLAND TX 797602	10/16/2025
9589 0710 5270 1533 1770 75	PERMIAN BASIN GIF I LLC	PO BOX 131239	SPRING TX 77393	10/16/2025
9589 0710 5270 1533 1770 82	TAURUS ROYALTY LLC	PO BOX 1477	LITTLE ELM TX 75068	10/16/2025
9589 0710 5270 1533 1770 99	BECKY R COOPER	PO BOX 1482	SONOITA AZ 846377	10/16/2025
9589 0710 5270 1533 1771 05	DIANE M FARRELL	PO BOX 1600	SAN ANTONIO TX 78296	10/16/2025
9589 0710 5270 1533 1771 12	WILLIAM L FARRELL	PO BOX 1600	SAN ANTONIO TX 78296	10/16/2025
9589 0710 5270 1533 1771 29	STACY ANN WELCH GREEN	PO BOX 164	SONOITA AZ 846377	10/16/2025
9589 0710 5270 1533 1771 36	COLBURN OIL LP	PO BOX 2524	MIDLAND TX 79702	10/16/2025
9589 0710 5270 1533 1771 43	CULBERTSON MANAGEMENT TRUST	PO BOX 2918	MIDLAND TX 79702	10/16/2025
9589 0710 5270 1533 1771 50	PENASCO PETROLEUM LLC	PO BOX 4168	ROSWELL NM 88202	10/16/2025
9589 0710 5270 1533 1771 67	PEGASUS RESOURCES III NM CORPORATION	PO BOX 470698	FORT WORTH TX 76147	10/16/2025
9589 0710 5270 1533 1771 74	MCMULLEN MINERALS II LP	PO BOX 470857	FORT WORTH TX 76147	10/16/2025
9589 0710 5270 1533 1771 81	MCMULLEN MINERALS LLC	PO BOX 470857	FORT WORTH TX 76147	10/16/2025
9589 0710 5270 1533 1771 98	GEORGE RYAN INGRAM	PO BOX 512	CHICKASHA OK 73023	10/16/2025
9589 0710 5270 1533 1772 04	PEGASUS RESOURCES LLC	PO BOX 733980	DALLAS TX 75373	10/16/2025
9589 0710 5270 1533 1772 11	SHARBRO ENERGY LLC	PO BOX 840	ARTESIA NM 88211	10/16/2025
9589 0710 5270 1533 1772 28	EOG RESOURCES INC	PO BOX 840321	DALLAS TX 75284	10/16/2025
9589 0710 5270 1533 1772 35	JOHN A HOLMSTROM 2004 TR	PO BOX 90727	PASADENA CA 91109	10/16/2025
9589 0710 5270 1533 1772 42	KANSAS UNIVERSITY ENDOWMENT	PO BOX 928	LAWRENCE KS 66044	10/16/2025
N/A	HOMER NELSON HUBBARD	UNKNOWN	UNKNOWN DE 19801	N/A
N/A	JOSEPH W FLETCHER AND WIFE, BESSIE L. FLETCHER	UNKNOWN	DELAWARE DE 19801	N/A
N/A	R J HUBBARD	UNKNOWN	UNKNOWN DE 19801	N/A
N/A	ROBERT E. ANDERSON AND WIFE, GLENDA RAE ANERSON	UNKNOWN	UNKNOWN DE 19801	N/A

Affidavit of Publication

No. 68210

State of New Mexico Publisher

County of Eddy:

Adrian Hedden

being duly sworn, sayes that he is the **Publisher**

of the Carlsbad Current Argus, a weekly newspaper of general circulation, published in English at Carlsbad, said county and state, and that the hereto attached

Legal Ad

was published in a regular and entire issue of the said Carlsbad Current Argus, a weekly newspaper duly qualified for that purpose within the meaning of Chapter 167 of the 1937 Session Laws of the state of New Mexico for

1 Consecutive weeks/day on the same day as follows:

First Publication October 21, 2025

Second Publication

Third Publication

Fourth Publication

Fifth Publication

Sixth Publication

Seventh Publication

Eighth Publication

Subscribed ans sworn before me this

23rd day of October 2025

LATISHA ROMINE
Notary Public, State of New Mexico
Commission No. 1076338
My Commission Expires
05-12-2027

Latisha Romine

Latisha Romine

Notary Public, Eddy County, New Mexico

Copy of Publication:

TO: ALL AFFECTED PARTIES, INCLUDING: SARGAR LLC BRENDA KAY VINCENT MARILYN MIMI RITCHEY MATTHEW CARSON COTTINGHAM MILES JENNIE VUKSICH JULIA TERRI WELCH SANDERS THOMAS WELCH WEST BEND ENERGY PARTNERS LLC ZELMA MARTHA HUBBARD REUTER CHEVRON U.S.A. INC HARRY A. MILLER, III JOE ALLISON BATES SIERRA ENERGY ROYALTIES, LLC RACHELLE ARGYLE LJA CHARITABLE INVESTMENTS, LLC CHARLES WILLIAM HIVELY BRYAN WINSTON WELCH ROBERT KEITH LOVELACE & 2016 HYATT BASS FAM TR 2016 SAMANTHA BASS FAM TR CHRISTOPHER MADDOX BASS THE BASS SICKEL 2016 CHILDRENS TR 2016 SAMANTHA BASS FAMILY TRUST 2016 HYATT BASS FAMILY TRUST ANNE CHANDLER BASS EVANS BMT I BPEOR NM, LLC BMT II BPEOR NM, LLC CTAM O AND GAS LLC CTV-CTAM BPEOR NM, LLC CTV-LMB I BPEOR NM, LLC CTV-LMB II BPEOR NM, LLC CTV-SRB I BPEOR NM, LLC CTV-SRB I BPEOR NM, LLC CTV-SRB II BPEOR NM, LLC CTV-SRB II BPEOR NM, LLC GC OIL AND GAS LLC Goliad-LMB I BPEOR NM, LLC Goliad-LMB II BPEOR NM, LLC Goliad-SRB I BPEOR NM, LLC Goliad-SRB II BPEOR NM, LLC KEYSTONE (CTAM) BPEOR NM, LLC KEYSTONE (RMB) BPEOR NM, LLC LMB I BPEOR NM, LLC LMB II BPEOR NM, LLC LMB RSB GST EXEMPT DYNASTY 2016 TR LMB RSB NON EXEMPT 2016 TRUST LMB/RSB GST EXEMPT DYNASTY 2016 TRN SRB I BPEOR NM, LLC SRB II BPEOR NM, LLC THE PHILECOLOGY FOUNDATION THRU LINE BPEOR NM, LLC TIMOTHY RICHARDSON BASS WD I BPEOR NM, LLC WD II BPEOR NM, LLC ELLEN MARION SKYLARK WING RESOURCES III, LLC WING RESOURCES IV, LLC WING RESOURCES VI, LLC WING RESOURCES VII, LLC ELK RANGE ROYALTIES II, LP XTO HOLDINGS LLC-RU5737 XTO DELAWARE BASIN LLC-RU5766 BRANDY M ROBERTS PERPETUAL RESOURCE ASSETS, LLC PALAMAR ENTERPRISES LLC WALLACE W IRWIN PROPERTIES LLC ARICKA L GREEN DANNY ALLEN BARRETT MICHAEL IRVIN WELCH, JR. "NEW MEXICO COMMISSIONER OF PUBLIC LANDS - NM State Land Office" IMPERIAL MINERALS, LLC JOHN DREW MILLER ICON MINERALS LLC TRAVIS KELLY MELLARD MSH FAMILY REAL ESTATE PARTNERSHIP II, LLC SMP SIDECAR TITAN MINERAL HOLDINGS, LP SMP TITAN FLEX, LP SMP TITAN MINERAL HOLDING, LP SARA ARN ROGER KENT HALDEMAN LEA ANNE C KOCH SLASH EXPLORATION LIMITED PARTNERSHIP COG OPERATING, LLC CONCHO OIL & GAS, LLC MARATHON OIL PERMIAN, LLC PHILLIPS PETROLEUM COMPANY MAGNUM HUNTER PRODUCTION, INC. BUREAU OF LAND MANAGEMENT ATTN: JONATHAN SHEPARD EMMA LOU HARDIN GEORGETTE C. NICHOLS MMS BRENHAM FEDERAL MARGARET DELL BRIDGES MELANIE MILES WALTERS MARGARET ANNE MILLER CARRICO =SHOW GOAT CAPITAL, L.P. CLAIRE ANN IVERSON REV LIV TR EGP REVOCABLE LIVING TRUST KIP REVOCABLE LIVING TRUST SIEGFRIED JAMES IVERSON III REV LIV TR TIG PROPERTIES LP PERMIAN BASIN GIF I LLC TAURUS ROYALTY LLC BECKY R COOPER DIANE M FARRELL WILLIAM L FARRELL STACY ANN WELCH GREEN COLBURN OIL LP CULBERTSON MANAGEMENT TRUST PENASCO PETROLEUM LLC PEGASUS RESOURCES III NM CORPORATION MCMULLEN MINERALS II LP MCMULLEN MINERALS LLC GEORGE RYAN INGRAM PEGASUS RESOURCES LLC SHARBRO ENERGY LLC EOG RESOURCES INC JOHN A HOLMSTROM 2004 TR KANSAS UNIVERSITY ENDOWMENT

Application of XTO Permian Operating, LLC for administrative approval to surface commingle (lease) oil and gas production, off-lease storage and measure from leases comprised of Sections 15, 20, 21, and 22 Township 20 South, Range 31 East, NMPM, and participating area (PA) comprised of Sections 13, 14, 23, and 24; Eddy County, New Mexico.

Application of XTO Permian Operating, LLC for administrative approval to surface commingle VRU-Flash gas[1] from participating areas and lease comprised of Sections 13, 14, 15, 16, 17, 20, 21, 22, 23 and 24 of Township 20 South, Range 31 East, Eddy County, New Mexico (the "Lands")

XTO Permian Operating, LLC (OGRID No. 373075) ("XTO"), pursuant to 19.15.12.10 NMAC, seeks administrative approval to surface commingle (off lease) diversely owned oil and gas production at the Big Eddy Unit DI 30 Central Tank Battery ("CTB") insofar as all existing and future wells drilled in the following spacing units:

(a) The 9,355.64-acre, of participating area (PA) comprised of Section 13: All; Section 14: All; Section 22: S2SE; Section 23: All; Section 24: All; Section 25: All; Section 26: All; Section 27: E2; Township 22 South, Range 31 East Section 17: ALL; Section 18: Lots 1,2,3,4, E2W2, E2; Section 19: Lots 1,2,3,4, E2W2, E2; Section 20: All; Section 21: All; Section 28: All; Section 29: All; Section 30: Lots 1,2,3,4, E2W2, E2, Township 22 South, Range 32 East, in the [97650] **WC WILLIAMS SINK; BONE SPRING** currently dedicated to the following well:

30-015-46199	BIG EDDY UNIT 30E QUI GON	102H
30-015-48159	BIG EDDY UNIT 30E QUI-GON	103H
30-015-46244	BIG EDDY UNIT 30 REY	102H
30-015-48156	BIG EDDY UNIT 30E REY	103H
30-015-46194	BIG EDDY UNIT 30E SKYWALKER	100H
30-015-46195	BIG EDDY UNIT 30E SKYWALKER	101H
30-015-46933	BIG EDDY UNIT 30E SKYWALKER	102H
30-015-46935	BIG EDDY UNIT 30E SKYWALKER	103H
30-015-46937	BIG EDDY UNIT 30E SKYWALKER	104H
30-015-46938	BIG EDDY UNIT 30E SKYWALKER	105H

(b) The **160.00-acre** of Lease **NMLC0065944** comprised of Section 22: W2NE, W2NW; the 160.00-acre of Lease **NMLC0065944A** comprised of Section 22: E2NE, E2NW; the 320.00- acre of Lease **NMLC 0001083** comprised of Section 20: N2; the 240.00-acre of Lease **NMLC 0004082** comprised of Section 21: W2NE, NW4; the 80.00-acre of Lease **NMLC 0065874A** comprised of Section 21: E2NE Township 20 South, Range 31 East, in the [97650] **WC WILLIAMS SINK; BONE SPRING** currently dedicated to the following well:

30-015-55795	BIG EDDY UNIT DI 30 WEST 15 20	007H
30-015-55743	BIG EDDY UNIT DI 30 WEST 15 20	008H
30-015-55744	BIG EDDY UNIT DI 30 WEST 15 20	009H

(c) The **40.00-acre** of State Lease **B1-0621-0001** comprised of Section 16: SENE; the **360.00- acre** of State Lease **E0-0264-0007** comprised of Section 16: SE/4; N2NE; SWNE; E2NW; the **240.00-acre** of State Lease **E0-5230-0007** comprised of Section 16: SW/4; W2NW; the **480.00-acre** of Lease **NMNM 0063667** comprised of Section 15: E2; E2W2; the **480.00-acre** of Lease **NMNM 0004082** comprised of Section 17: E2; E2W2; the 320.00-acre of Lease NMLC 0070220 comprised of Section 17: W2W2; and comprised of Section 15: W2W2; Township 20 South, Range 31 East, in the [97650] **WC WILLIAMS SINK; BONE SPRING** currently dedicated to the following well:

30-015-55791	BIG EDDY UNIT DI 30 WEST 15 17	001H
30-015-55792	BIG EDDY UNIT DI 30 WEST 15 17	002H
30-015-55796	BIG EDDY UNIT DI 30 WEST 15 17	003H
30-015-55793	BIG EDDY UNIT DI 30 WEST 15 17	004H
30-015-55848	BIG EDDY UNIT DI 30 WEST 15 17	005H
30-015-55794	BIG EDDY UNIT DI 30 WEST 15 17	006H

(d) Pursuant to 19.15.12.10.C(4)(g), from all future additions of pools, leases or leases and pools to the Big Eddy Unit DI 30 Central Tank Battery with notice provided only to the owners of interests to be added.

Any objection to this application must be filed in writing within twenty (20) days from the date of publication with the New Mexico Oil Conservation Division, 1220 South St. Francis Drive, Santa Fe, New Mexico, 87505. If no objection is received within this twenty-day period, this application may be approved administratively by the Division. If you have any questions about this application, please contact Russell Young, XTO Energy, Inc., (832)-454-2857or Russell.young@exxonmobil.com.
68210-Published in Carlsbad Current Argus Oct. 21, 2025.

From: Florez, Marie E
To: Clelland, Sarah, EMNRD
Cc: Granillo, Lacey /C; Walker, Crystal L /C
Subject: RE: [EXTERNAL] BEU DI 30 - VRU application ACTION ID 520284
Date: Wednesday, December 10, 2025 4:24:16 PM
Attachments: BEU DI30 Facility Statement 20250703 removed VRU.pdf
DI 30 CTB_NMOCDApplicationLetter.1 new removed VRU.pdf
DI 30 CTB_NMOCDApplicationLetter.1 existing Removed VRU.pdf
DI 30 CTB_NMOCDApplicationLetter.1 VRU.pdf
VRU Facility - CORRECTED removed oil.pdf

Sarah,
See attached:

If you have any questions, please let me know.

Thanks,

Marie E. Florez
Regulatory Analyst
Permian Basin – Delaware Operations

ExxonMobil Upstream Company
A division of Exxon Mobil Corporation
6401 Holiday Hill Rd
Midland, TX 79707

505-419-8420 cell
432-894-4949 cell
Marie.florez@exxonmobil.com

From: Clelland, Sarah, EMNRD <Sarah.Clelland@emnrd.nm.gov>
Sent: Monday, December 8, 2025 8:08 AM
To: Florez, Marie E <marie.florez@exxonmobil.com>
Subject: Re: [EXTERNAL] BEU DI 30 - VRU application ACTION ID 520284

Hey,

Can we move this to 1:30?

Get Outlook for iOS

From: Clelland, Sarah, EMNRD
Sent: Friday, December 5, 2025 1:28:06 PM
To: Florez, Marie E <marie.florez@exxonmobil.com>
Subject: RE: [EXTERNAL] BEU DI 30 - VRU application ACTION ID 520284

So, we can obviously have this discussion on Monday, but I will forget if I don't say something now.
I am thinking we keep the VRU on the same application as the Oil and Gas order because XTO is going to be producing all at this CTB. The only reason Dean did a VRU only order is because that was the only thing being commingled at that battery.

Thanks,

Sarah Clelland

Petroleum Specialist
State of New Mexico
Energy, Minerals, and Natural Resources Department
Oil Conservation Division
Cell: (505) 537-0627
Sarah.Clelland@emnrd.nm.gov

From: Florez, Marie E <marie.florez@exxonmobil.com>
Sent: Friday, December 5, 2025 12:13 PM
To: Clelland, Sarah, EMNRD <Sarah.Clelland@emnrd.nm.gov>
Cc: Granillo, Lacey /C <lacey.granillo@exxonmobil.com>; Young, Russell <russell.young@exxonmobil.com>; Walker, Crystal L /C <crystal.l.walker@exxonmobil.com>; Rubio, Amber /C <amber.rubio@exxonmobil.com>
Subject: [EXTERNAL] BEU DI 30 - VRU application ACTION ID 520284

CAUTION: This email originated outside of our organization. Exercise caution prior to clicking on links or opening attachments.

Sarah,

Per our phone conversation, I'm requesting NMOCD to reject Action ID 520284 for BEU DI 30, since the VRU language is part of the existing order and the new application there's no need for a Standalone VRU submittal.

If you have any questions, please let me know.

Thank you,

Marie E. Florez
Regulatory Analyst
Permian Basin – Delaware Operations

ExxonMobil Upstream Company
A division of Exxon Mobil Corporation
6401 Holiday Hill Rd
Midland, TX 79707

505-419-8420 cell
432-894-4949 cell
Marie.florez@exxonmobil.com

Remove

Tracking Number:
9589071052701533177051
Copy Add to Informed Delivery

Latest Update
Your item was picked up at the post office at 12:48 pm on October 29, 2025 in MIDLAND, TX 79701.

Delivered
Delivered, Individual Picked Up at Post Office
MIDLAND, TX 79701
October 29, 2025, 12:48 pm
See All Tracking History
What Do USPS Tracking Statuses Mean?

Get More Out of USPS Tracking:
USPS Tracking Plus®

Text & Email Updates

USPS Tracking Plus®

Product Information

See Less

Tracking Number:
9589071052701533177068
Copy Add to Informed Delivery

Latest Update
Your item was picked up at the post office at 12:48 pm on October 29, 2025 in MIDLAND, TX 79701.

Delivered
Delivered, Individual Picked Up at Post Office
MIDLAND, TX 79701
October 29, 2025, 12:48 pm
See All Tracking History
What Do USPS Tracking Statuses Mean?

Get More Out of USPS Tracking:
USPS Tracking Plus®

See More

Tracking Number:
9589071052701533177075
Copy Add to Informed Delivery

Latest Update
Your item has been delivered and is available at a PO Box at 9:12 am on October 27, 2025 in SPRING, TX 77381.

Delivered
Delivered, PO Box
SPRING, TX 77381
October 27, 2025, 9:12 am
See All Tracking History
What Do USPS Tracking Statuses Mean?

Get More Out of USPS Tracking:
USPS Tracking Plus®

See More

Tracking Number:
9589071052701533177082
Copy Add to Informed Delivery

Latest Update
Your item has been delivered and is available at a PO Box at 12:23 pm on October 22, 2025 in LITTLE ELM, TX 75068.

Delivered
Delivered, PO Box
LITTLE ELM, TX 75068
October 22, 2025, 12:23 pm
See All Tracking History
What Do USPS Tracking Statuses Mean?

Get More Out of USPS Tracking:
USPS Tracking Plus®

See More

Tracking Number:
9589071052701533177099
Copy Add to Informed Delivery

Latest Update
Your item was picked up at the post office at 11:33 am on October 27, 2025 in SCHOFIELD, WI 54476.

Delivered
Delivered, Individual Picked Up at Post Office
SCHOFIELD, WI 54476
October 27, 2025, 11:33 am
See All Tracking History
What Do USPS Tracking Statuses Mean?

Get More Out of USPS Tracking:
USPS Tracking Plus®

See More

Tracking Number:
9589071052701533177105
Copy Add to Informed Delivery

Latest Update
Your item was picked up at the post office at 6:14 am on October 23, 2025 in SAN ANTONIO, TX 78205.

Delivered
Delivered, Individual Picked Up at Post Office
SAN ANTONIO, TX 78205
October 23, 2025, 6:14 am
See All Tracking History
What Do USPS Tracking Statuses Mean?

Get More Out of USPS Tracking:
USPS Tracking Plus®

See More

Tracking Number:
9589071052701533177112
Copy Add to Informed Delivery

Latest Update
Your item was picked up at the post office at 6:14 am on October 23, 2025 in SAN ANTONIO, TX 78205.

Delivered
Delivered, Individual Picked Up at Post Office
SAN ANTONIO, TX 78205
October 23, 2025, 6:14 am
See All Tracking History
What Do USPS Tracking Statuses Mean?

Get More Out of USPS Tracking:
USPS Tracking Plus®

See More

Tracking Number:
9589071052701533177129
Copy Add to Informed Delivery

Latest Update
Your item was picked up at the post office at 3:07 pm on October 23, 2025 in SCHOFIELD, WI 54476.

Delivered
Delivered, Individual Picked Up at Post Office
SCHOFIELD, WI 54476
October 23, 2025, 3:07 pm
See All Tracking History
What Do USPS Tracking Statuses Mean?

Get More Out of USPS Tracking:
USPS Tracking Plus®

See More

Tracking Number:
9589071052701533177136
Copy Add to Informed Delivery

Latest Update
Your item was picked up at the post office at 12:38 pm on October 23, 2025 in MIDLAND, TX 79701.

Delivered
Delivered, Individual Picked Up at Post Office
MIDLAND, TX 79701
October 23, 2025, 12:38 pm
See All Tracking History
What Do USPS Tracking Statuses Mean?

Get More Out of USPS Tracking:
USPS Tracking Plus®

See More

Tracking Number:
9589071052701533177143
Copy Add to Informed Delivery

Latest Update
Your item has been delivered to the original sender at 12:41 pm on December 1, 2025 in MIDLAND, TX 79707.

Delivered
Delivered, To Original Sender
MIDLAND, TX 79707
December 1, 2025, 12:41 pm
See All Tracking History
What Do USPS Tracking Statuses Mean?

Get More Out of USPS Tracking:
USPS Tracking Plus®

See More

Tracking Number:
9589071052701533177150
Copy Add to Informed Delivery

Latest Update
Your item was picked up at the post office at 12:01 pm on October 27, 2025 in ROSWELL, NM 88201.

Delivered
Delivered, Individual Picked Up at Post Office
ROSWELL, NM 88201
October 27, 2025, 12:01 pm
See All Tracking History
What Do USPS Tracking Statuses Mean?

Get More Out of USPS Tracking:
USPS Tracking Plus®

See More

Tracking Number:
9589071052701533177167
Copy Add to Informed Delivery

Latest Update
Your item was picked up at the post office at 9:32 am on October 24, 2025 in FORT WORTH, TX 76107.

Delivered
Delivered, Individual Picked Up at Post Office
FORT WORTH, TX 76107
October 24, 2025, 9:32 am
See All Tracking History
What Do USPS Tracking Statuses Mean?

Get More Out of USPS Tracking:
USPS Tracking Plus®

See More

Tracking Number:
9589071052701533177174
Copy Add to Informed Delivery

Latest Update
Your item was picked up at the post office at 1:20 pm on October 22, 2025 in FORT WORTH, TX 76107.

Delivered
Delivered, Individual Picked Up at Post Office
FORT WORTH, TX 76107
October 22, 2025, 1:20 pm
See All Tracking History
What Do USPS Tracking Statuses Mean?

Get More Out of USPS Tracking:
USPS Tracking Plus®

See More

Tracking Number:
9589071052701533177181
Copy Add to Informed Delivery

Latest Update
Your item was picked up at the post office at 1:20 pm on October 22, 2025 in FORT WORTH, TX 76107.

Delivered
Delivered, Individual Picked Up at Post Office
FORT WORTH, TX 76107
October 22, 2025, 1:20 pm
See All Tracking History
What Do USPS Tracking Statuses Mean?

Get More Out of USPS Tracking:
USPS Tracking Plus®

See More

Tracking Number:
9589071052701533177198
Copy Add to Informed Delivery

Latest Update
Your item arrived at our USPS facility in OKLAHOMA CITY OK DISTRIBUTION CENTER on December 10, 2025 at 10:33 am. The item is currently in transit to the destination.

Moving Through Network
Arrived at USPS Regional Facility
OKLAHOMA CITY OK DISTRIBUTION CENTER
December 10, 2025, 10:33 am

In Transit to Next Facility
November 30, 2025

See All Tracking History
What Do USPS Tracking Statuses Mean?

Get More Out of USPS Tracking:
USPS Tracking Plus®

See More

Tracking Number:
9589071052701533177204
Copy Add to Informed Delivery

Latest Update
Your item has been delivered and is available at a PO Box at 7:00 pm on October 21, 2025 in DALLAS, TX 75375.

Delivered
Delivered, PO Box
DALLAS, TX 75375
October 21, 2025, 7:00 pm
See All Tracking History
What Do USPS Tracking Statuses Mean?

Get More Out of USPS Tracking:
USPS Tracking Plus®

See More

Tracking Number:
9589071052701533177211
Copy Add to Informed Delivery

Latest Update
Your item was picked up at the post office at 11:02 am on October 22, 2025 in ARTESIA, NM 88210.

Delivered
Delivered, Individual Picked Up at Post Office
ARTESIA, NM 88210
October 22, 2025, 11:02 am
See All Tracking History
What Do USPS Tracking Statuses Mean?

Get More Out of USPS Tracking:
USPS Tracking Plus®

See More

Tracking Number:
9589071052701533177228
Copy Add to Informed Delivery

Latest Update
Your item has been delivered and is available at a PO Box at 9:47 pm on October 21, 2025 in DALLAS, TX 75254.

Delivered
Delivered, PO Box
DALLAS, TX 75254
October 21, 2025, 9:47 pm
See All Tracking History
What Do USPS Tracking Statuses Mean?

Get More Out of USPS Tracking:
USPS Tracking Plus®

See More

Tracking Number:
9589071052701533177235
Copy Add to Informed Delivery

Latest Update
Your item has been delivered to the original sender at 11:55 am on November 14, 2025 in MIDLAND, TX 79707.

Delivered
Delivered, To Original Sender
MIDLAND, TX 79707
November 14, 2025, 11:55 am
See All Tracking History
What Do USPS Tracking Statuses Mean?

Get More Out of USPS Tracking:
USPS Tracking Plus®

See More

Tracking Number:
9589071052701533177242
Copy Add to Informed Delivery

Latest Update
Your item was picked up at the post office at 10:33 am on October 27, 2025 in LAWRENCE, KS 66044.

Delivered
Delivered, Individual Picked Up at Post Office
LAWRENCE, KS 66044
October 27, 2025, 10:33 am
See All Tracking History
What Do USPS Tracking Statuses Mean?

Get More Out of USPS Tracking:
USPS Tracking Plus®

See More

Tracking Number:
9590971092731376450

Latest Update
Your item was delivered at an individual address at 10:00 am on October 28, 2025 in ELLICOTT CITY, MD 21043.

See More ✓

Delivered
Delivered, Left with Individual
ELLICOTT CITY, MD 21043
October 28, 2025, 10:00 am
See All Tracking History
What Do USPS Tracking Statuses Mean?

Tracking Number:
9590971092731376467

Latest Update
Your item was delivered to an individual at the address at 10:00 am on October 28, 2025 in ELLICOTT CITY, MD 21043.

See More ✓

Delivered
Delivered, Left with Individual
ELLICOTT CITY, MD 21043
October 28, 2025, 10:00 am
See All Tracking History
What Do USPS Tracking Statuses Mean?

Tracking Number:
9590971092731376115

Latest Update
Your item was delivered to an individual at the address at 12:00 pm on October 28, 2025 in ELLICOTT CITY, MD 21043.

See More ✓

Delivered
Delivered, Left with Individual
ELLICOTT CITY, MD 21043
October 28, 2025, 12:00 pm
See All Tracking History
What Do USPS Tracking Statuses Mean?

Tracking Number:
9590971092731376122

Latest Update
Your item was delivered to the front desk, reception area, or mail room at 10:41 am on October 1, 2025 in ELLICOTT CITY, MD 21043.

See More ✓

Delivered
Delivered, Front Desk/Reception/Mail Room
ELLICOTT CITY, MD 21043
October 1, 2025, 10:41 am
See All Tracking History
What Do USPS Tracking Statuses Mean?

Tracking Number:
9590971092731376481

Latest Update
Your item has been delivered to the original sender at 10:00 am on October 28, 2025 in ELLICOTT CITY, MD 21043.

See More ✓

Delivered
Delivered to Original Sender
ELLICOTT CITY, MD 21043
October 28, 2025, 10:00 am
See All Tracking History
What Do USPS Tracking Statuses Mean?

Tracking Number:
9590971092731376498

Latest Update
Your item was picked up at a postal facility at 7:21 am on October 28, 2025 in ELLICOTT CITY, MD 21043.

See More ✓

Delivered
Delivered to Pickup Point for Pickup by Customer
ELLICOTT CITY, MD 21043
October 28, 2025, 7:21 am
See All Tracking History
What Do USPS Tracking Statuses Mean?

Tracking Number:
9590971092731376504

Latest Update
Your item was picked up at a postal facility at 11:21 am on October 28, 2025 in ELLICOTT CITY, MD 21043.

See More ✓

Delivered
Delivered, Front Desk/Reception/Mail Room
ELLICOTT CITY, MD 21043
October 28, 2025, 11:21 am
See All Tracking History
What Do USPS Tracking Statuses Mean?

Tracking Number:
9590971092731376511

Latest Update
Your item was delivered at 11:00 am on October 28, 2025 in ELLICOTT CITY, MD 21043.

See More ✓

Delivered
Delivered, Left with Individual
ELLICOTT CITY, MD 21043
October 28, 2025, 11:00 am
See All Tracking History
What Do USPS Tracking Statuses Mean?

Tracking Number:
9590971092731376528

Latest Update
Your item was delivered to an agent at 10:00 am on October 28, 2025 in ELLICOTT CITY, MD 21043.

See More ✓

Delivered to Agent
Delivered to Agent, Forwarded
ELLICOTT CITY, MD 21043
October 28, 2025, 10:00 am
See All Tracking History
What Do USPS Tracking Statuses Mean?

Tracking Number:
9590971092731376535

Latest Update
Your item was delivered to an individual at the address at 9:19 pm on October 28, 2025 in AUSTIN, TX 78704.

See More ✓

Delivered
Delivered, Left with Individual
AUSTIN, TX 78704
October 28, 2025, 9:19 pm
See All Tracking History
What Do USPS Tracking Statuses Mean?

Tracking Number:
9590971092731376542

Latest Update
Your item was picked up at the post office at 12:13 pm on October 28, 2025 in ELLICOTT CITY, MD 21043.

See More ✓

Delivered
Delivered, Individual Picked Up at Post Office
ELLICOTT CITY, MD 21043
October 28, 2025, 12:13 pm
See All Tracking History
What Do USPS Tracking Statuses Mean?

Tracking Number:
9590971092731376559

Latest Update
Your item was delivered to the front desk, reception area, or mail room at 10:41 am on October 1, 2025 in ELLICOTT CITY, MD 21043.

See More ✓

Delivered
Delivered, Front Desk/Reception/Mail Room
ELLICOTT CITY, MD 21043
October 1, 2025, 10:41 am
See All Tracking History
What Do USPS Tracking Statuses Mean?

Tracking Number:
9590971092731376566

Latest Update
Your item was delivered to an individual at the address at 10:00 am on October 28, 2025 in ELLICOTT CITY, MD 21043.

See More ✓

Delivered
Delivered, Left with Individual
ELLICOTT CITY, MD 21043
October 28, 2025, 10:00 am
See All Tracking History
What Do USPS Tracking Statuses Mean?

Tracking Number:
9590971092731376573

Latest Update
Your item was delivered to the front desk, reception area, or mail room at 1:01 pm on October 28, 2025 in ARGUTHA, NJ 08360.

See More ✓

Delivered
Delivered, Front Desk/Reception/Mail Room
ARGUTHA, NJ 08360
October 28, 2025, 1:01 pm
See All Tracking History
What Do USPS Tracking Statuses Mean?

Tracking Number:
9590971092731376580

Latest Update
Your item was delivered to an individual at the address at 12:00 pm on October 28, 2025 in ELLICOTT CITY, MD 21043.

See More ✓

Delivered
Delivered, Left with Individual
ELLICOTT CITY, MD 21043
October 28, 2025, 12:00 pm
See All Tracking History
What Do USPS Tracking Statuses Mean?

Tracking Number:
9590971092731376597

Latest Update
Your item was delivered to an individual at the address at 12:00 pm on October 28, 2025 in ELLICOTT CITY, MD 21043.

See More ✓

Delivered
Delivered, Left with Individual
ELLICOTT CITY, MD 21043
October 28, 2025, 12:00 pm
See All Tracking History
What Do USPS Tracking Statuses Mean?

Tracking Number:
9590971092731376603

Latest Update
Your item was delivered to an individual at the address at 10:00 am on October 28, 2025 in ELLICOTT CITY, MD 21043.

See More ✓

Delivered
Delivered, Left with Individual
ELLICOTT CITY, MD 21043
October 28, 2025, 10:00 am
See All Tracking History
What Do USPS Tracking Statuses Mean?

Tracking Number:
9590971092731376610

Latest Update
Your item has been delivered to the original sender at 1:00 pm on October 28, 2025 in ELLICOTT CITY, MD 21043.

See More ✓

Delivered
Delivered to Original Sender
ELLICOTT CITY, MD 21043
October 28, 2025, 1:00 pm
See All Tracking History
What Do USPS Tracking Statuses Mean?

Tracking Number:
9590971092731376627

Latest Update
Your item was delivered to an individual at the address at 9:00 am on October 28, 2025 in DALLAS, TX 75201.

See More ✓

Delivered
Delivered, Left with Individual
DALLAS, TX 75201
October 28, 2025, 9:00 am
See All Tracking History
What Do USPS Tracking Statuses Mean?

Tracking Number:
9590971092731376634

Latest Update
Your item was delivered to an individual at the address at 10:00 am on October 28, 2025 in ELLICOTT CITY, MD 21043.

See More ✓

Delivered
Delivered, Left with Individual
ELLICOTT CITY, MD 21043
October 28, 2025, 10:00 am
See All Tracking History
What Do USPS Tracking Statuses Mean?

Tracking Number:
9590971092731376641

Latest Update
Your item was delivered to an individual at the address at 10:00 am on October 28, 2025 in ELLICOTT CITY, MD 21043.

See More ✓

Delivered
Delivered, Left with Individual
ELLICOTT CITY, MD 21043
October 28, 2025, 10:00 am
See All Tracking History
What Do USPS Tracking Statuses Mean?

Tracking Number:
9590971092731376658

Latest Update
Your item was delivered to an individual at the address at 10:00 am on October 28, 2025 in ELLICOTT CITY, MD 21043.

See More ✓

Delivered
Delivered, Left with Individual
ELLICOTT CITY, MD 21043
October 28, 2025, 10:00 am
See All Tracking History
What Do USPS Tracking Statuses Mean?

Tracking Number:
9590971092731376665

Latest Update
Your item is arriving within the USPS network and is expected to be delivered to your address. We'll update when it reaches the next facility.

See More ✓

Delivered
Out for Delivery
ELLICOTT CITY, MD 21043
October 28, 2025, 8:00 am
See All Tracking History
What Do USPS Tracking Statuses Mean?

Tracking Number:
9590971092731376672

Latest Update
Your item was delivered to an individual at the address at 9:00 am on October 28, 2025 in GERMAN, TX 77345.

See More ✓

Delivery Attempted - No Mail Receptacle
Missing Through Network
Arrived at USPS Regional Facility
HOUSTON NORTH PROCESSING CENTER
October 25, 2025, 10:30 am
See All Tracking History
What Do USPS Tracking Statuses Mean?

Tracking Number:
9590971092731376689

Latest Update
Your item was delivered to an individual at the address at 10:00 am on October 28, 2025 in ELLICOTT CITY, MD 21043.

See More ✓

Delivered
Delivered, Left with Individual
ELLICOTT CITY, MD 21043
October 28, 2025, 10:00 am
See All Tracking History
What Do USPS Tracking Statuses Mean?

Tracking Number:
9590971092731376696

Latest Update
Your item has been delivered to the original sender at 10:00 am on October 28, 2025 in ELLICOTT CITY, MD 21043.

See More ✓

Delivered
Delivered, To Original Sender
ELLICOTT CITY, MD 21043
October 28, 2025, 10:00 am
See All Tracking History
What Do USPS Tracking Statuses Mean?

Tracking Number:
9590971092731376702

Latest Update
Your item was delivered to an individual at the address at 10:00 am on October 28, 2025 in ELLICOTT CITY, MD 21043.

See More ✓

Delivered
Delivered, Left with Individual
ELLICOTT CITY, MD 21043
October 28, 2025, 10:00 am
See All Tracking History
What Do USPS Tracking Statuses Mean?

Tracking Number:
9590971092731376719

Latest Update
Your item was delivered to an individual at the address at 10:00 am on October 28, 2025 in ELLICOTT CITY, MD 21043.

See More ✓

Delivered
Delivered, Left with Individual
ELLICOTT CITY, MD 21043
October 28, 2025, 10:00 am
See All Tracking History
What Do USPS Tracking Statuses Mean?

Tracking Number:
9590971092731376726

Latest Update
Your item was delivered to an individual at the address at 10:00 am on October 28, 2025 in ELLICOTT CITY, MD 21043.

See More ✓

Delivered
Delivered, Left with Individual
ELLICOTT CITY, MD 21043
October 28, 2025, 10:00 am
See All Tracking History
What Do USPS Tracking Statuses Mean?

Tracking Number:
9590971092731376733

Latest Update
Your item was delivered to an individual at the address at 10:00 am on October 28, 2025 in ELLICOTT CITY, MD 21043.

See More ✓

Delivered
Delivered, Left with Individual
ELLICOTT CITY, MD 21043
October 28, 2025, 10:00 am
See All Tracking History
What Do USPS Tracking Statuses Mean?

Tracking Number:
9590971092731376740

Latest Update
Your item was delivered to an individual at the address at 12:00 pm on October 28, 2025 in ELLICOTT CITY, MD 21043.

See More ✓

Delivered
Delivered, Left with Individual
ELLICOTT CITY, MD 21043
October 28, 2025, 12:00 pm
See All Tracking History
What Do USPS Tracking Statuses Mean?

Tracking Number:
9590971092731376757

Latest Update
Your item was picked up at the post office at 7:00 am on October 28, 2025 in ELLICOTT CITY, MD 21043.

See More ✓

Delivered
Delivered, Individual Picked Up at Post Office
ELLICOTT CITY, MD 21043
October 28, 2025, 7:00 am
See All Tracking History
What Do USPS Tracking Statuses Mean?

Tracking Number:
9590971092731376764

Latest Update
Your item was picked up at the post office at 7:00 am on October 28, 2025 in ELLICOTT CITY, MD 21043.

See More ✓

Delivered
Delivered, Individual Picked Up at Post Office
ELLICOTT CITY, MD 21043
October 28, 2025, 7:00 am
See All Tracking History
What Do USPS Tracking Statuses Mean?

Tracking Number:
9586971052703353376771
Copy Add to Informed Delivery

Latest Update
Your item was picked up at the post office at 9:34 am on November 6, 2025 in SACRAMENTO, CA 95826.

Delivered
Delivered, Left with Individual
SACRAMENTO, CA 95826
November 6, 2025, 9:34 am

See More Tracking Events

What Do USPS Tracking Statuses Mean?

Get Real-Time Get of USPS Tracking
USPS Tracking Plus®

See More

Remove

Tracking Number:
9586971052703353376788
Copy Add to Informed Delivery

Latest Update
Your item was delivered to an individual at the address at 1:00 pm on October 29, 2025 in DALLAS, TX 75201.

Delivered
Delivered, Left with Individual
DALLAS, TX 75201
October 29, 2025, 1:00 pm

See More Tracking Events

What Do USPS Tracking Statuses Mean?

Get Real-Time Get of USPS Tracking
USPS Tracking Plus®

See More

Remove

Tracking Number:
9586971052703353376795
Copy Add to Informed Delivery

Latest Update
Your item was delivered to an individual at the address at 1:00 pm on October 29, 2025 in AUSTIN, TX 78759.

Delivered
Delivered, Left with Individual
AUSTIN, TX 78759
October 29, 2025, 1:00 pm

See More Tracking Events

What Do USPS Tracking Statuses Mean?

Get Real-Time Get of USPS Tracking
USPS Tracking Plus®

See More

Remove

Tracking Number:
9586971052703353376801
Copy Add to Informed Delivery

Latest Update
Your item was delivered to an individual at the address at 12:15 pm on October 29, 2025 in AUSTIN, TX 78759.

Delivered
Delivered, Left with Individual
AUSTIN, TX 78759
October 29, 2025, 12:15 pm

See More Tracking Events

What Do USPS Tracking Statuses Mean?

Get Real-Time Get of USPS Tracking
USPS Tracking Plus®

See More

Remove

Tracking Number:
9586971052703353376818
Copy Add to Informed Delivery

Latest Update
Your item was delivered to an individual at the address at 12:15 pm on October 29, 2025 in DALLAS, TX 75219.

Delivered
Delivered, Left with Individual
DALLAS, TX 75219
October 29, 2025, 12:15 pm

See More Tracking Events

What Do USPS Tracking Statuses Mean?

Get Real-Time Get of USPS Tracking
USPS Tracking Plus®

See More

Remove

Tracking Number:
9586971052703353376825
Copy Add to Informed Delivery

Latest Update
Your item was delivered to an individual at the address at 10:34 am on October 29, 2025 in DALLAS, TX 75219.

Delivered
Delivered, Left with Individual
DALLAS, TX 75219
October 29, 2025, 10:34 am

See More Tracking Events

What Do USPS Tracking Statuses Mean?

Get Real-Time Get of USPS Tracking
USPS Tracking Plus®

See More

Remove

Tracking Number:
9586971052703353376832
Copy Add to Informed Delivery

Latest Update
Your item was delivered to an individual at the address at 10:10 pm on October 29, 2025 in DALLAS, TX 75219.

Delivered
Delivered, Left with Individual
DALLAS, TX 75219
October 29, 2025, 10:10 pm

See More Tracking Events

What Do USPS Tracking Statuses Mean?

Get Real-Time Get of USPS Tracking
USPS Tracking Plus®

See More

Remove

Tracking Number:
9586971052703353376849
Copy Add to Informed Delivery

Latest Update
Your item was delivered to the front desk, reception area, or mail room at 11:47 am on October 29, 2025 in DALLAS, TX 75219.

Delivered
Delivered, Front Desk/Reception/Mail Room
DALLAS, TX 75219
October 29, 2025, 11:47 am

See More Tracking Events

What Do USPS Tracking Statuses Mean?

Get Real-Time Get of USPS Tracking
USPS Tracking Plus®

See More

Remove

Tracking Number:
9586971052703353376856
Copy Add to Informed Delivery

Latest Update
Your item was delivered at the post office at 11:00 am on October 27, 2025 in MESA, AZ 85209.

Delivered
Delivered, Individual Picked Up at Post Office
MESA, AZ 85209
October 27, 2025, 11:00 am

See More Tracking Events

What Do USPS Tracking Statuses Mean?

Get Real-Time Get of USPS Tracking
USPS Tracking Plus®

See More

Remove

Tracking Number:
9586971052703353376863
Copy Add to Informed Delivery

Latest Update
Your item was picked up at a postal facility at 12:07 am on October 29, 2025 in ESSANDAYAN, NM 87570.

Delivered
Delivered, Individual Picked Up at Postal Facility
ESSANDAYAN, NM 87570
October 29, 2025, 12:07 am

See More Tracking Events

What Do USPS Tracking Statuses Mean?

Get Real-Time Get of USPS Tracking
USPS Tracking Plus®

See More

Remove

Tracking Number:
9586971052703353376870
Copy Add to Informed Delivery

Latest Update
Your item was delivered to an individual at the address at 9:49 am on October 27, 2025 in ROSEVILLE, CA 95747.

Delivered
Delivered, Left with Individual
ROSEVILLE, CA 95747
October 27, 2025, 9:49 am

See More Tracking Events

What Do USPS Tracking Statuses Mean?

Get Real-Time Get of USPS Tracking
USPS Tracking Plus®

See More

Remove

Tracking Number:
9586971052703353376887
Copy Add to Informed Delivery

Latest Update
Your item was delivered to the front desk, reception area, or mail room at 11:47 am on October 29, 2025 in HOUSTON, TX 77079.

Delivered
Delivered, Front Desk/Reception/Mail Room
HOUSTON, TX 77079
October 29, 2025, 11:47 am

See More Tracking Events

What Do USPS Tracking Statuses Mean?

Get Real-Time Get of USPS Tracking
USPS Tracking Plus®

See More

Remove

Tracking Number:
9586971052703353376894
Copy Add to Informed Delivery

Latest Update
Your item was picked up at a postal facility at 7:40 am on October 31, 2025 in MIDLAND, TX 79701.

Delivered
Delivered, Individual Picked Up at Postal Facility
MIDLAND, TX 79701
October 31, 2025, 7:40 am

See More Tracking Events

What Do USPS Tracking Statuses Mean?

Get Real-Time Get of USPS Tracking
USPS Tracking Plus®

See More

Remove

Tracking Number:
9586971052703353376900
Copy Add to Informed Delivery

Latest Update
Your item was picked up at a postal facility at 7:40 am on October 31, 2025 in MIDLAND, TX 79701.

Delivered
Delivered, Individual Picked Up at Postal Facility
MIDLAND, TX 79701
October 31, 2025, 7:40 am

See More Tracking Events

What Do USPS Tracking Statuses Mean?

Get Real-Time Get of USPS Tracking
USPS Tracking Plus®

See More

Remove

Tracking Number:
9586971052703353376917
Copy Add to Informed Delivery

Latest Update
Your item was picked up at a postal facility at 7:40 am on October 31, 2025 in MIDLAND, TX 79701.

Delivered
Delivered, Individual Picked Up at Postal Facility
MIDLAND, TX 79701
October 31, 2025, 7:40 am

See More Tracking Events

What Do USPS Tracking Statuses Mean?

Get Real-Time Get of USPS Tracking
USPS Tracking Plus®

See More

Remove

Tracking Number:
9586971052703353376924
Copy Add to Informed Delivery

Latest Update
Your item was picked up at a postal facility at 7:45 am on October 31, 2025 in MIDLAND, TX 79701.

Delivered
Delivered, Individual Picked Up at Postal Facility
MIDLAND, TX 79701
October 31, 2025, 7:45 am

See More Tracking Events

What Do USPS Tracking Statuses Mean?

Get Real-Time Get of USPS Tracking
USPS Tracking Plus®

See More

Remove

Tracking Number:
9586971052703353376931
Copy Add to Informed Delivery

Latest Update
Your item has been delivered to an agent at the front desk, reception area, or mail room at 10:20 am on October 22, 2025 in CARLSBAD, NM 88220.

Delivered to Agent
Delivered to Agent, Front Desk/Reception/Mail Room
CARLSBAD, NM 88220
October 22, 2025, 10:20 am

See More Tracking Events

What Do USPS Tracking Statuses Mean?

Get Real-Time Get of USPS Tracking
USPS Tracking Plus®

See More

Remove

Tracking Number:
9586971052703353376948
Copy Add to Informed Delivery

Latest Update
Your item has been delivered to the original sender at 12:41 pm on December 1, 2025 in MIDLAND, TX 79707.

Delivered
Delivered, To Original Sender
MIDLAND, TX 79707
December 1, 2025, 12:41 pm

See More Tracking Events

What Do USPS Tracking Statuses Mean?

Get Real-Time Get of USPS Tracking
USPS Tracking Plus®

See More

Remove

Tracking Number:
9586971052703353376955
Copy Add to Informed Delivery

Latest Update
Your item has been delivered to the original sender at 9:49 pm on December 31, 2025 in MIDLAND, TX 79707.

Delivered
Delivered, To Original Sender
MIDLAND, TX 79707
December 31, 2025, 9:49 pm

See More Tracking Events

What Do USPS Tracking Statuses Mean?

Get Real-Time Get of USPS Tracking
USPS Tracking Plus®

See More

Remove

Tracking Number:
9586971052703353376962
Copy Add to Informed Delivery

Latest Update
Your item was delivered to an individual at the address at 10:00 am on October 29, 2025 in AUSTIN, TX 78759.

Delivered
Delivered, Left with Individual
AUSTIN, TX 78759
October 29, 2025, 10:00 am

See More Tracking Events

What Do USPS Tracking Statuses Mean?

Get Real-Time Get of USPS Tracking
USPS Tracking Plus®

See More

Remove

Tracking Number:
9586971052703353376979
Copy Add to Informed Delivery

Latest Update
Your item has been delivered to the original sender at 9:49 pm on December 31, 2025 in MIDLAND, TX 79707.

Delivered
Delivered, To Original Sender
MIDLAND, TX 79707
December 31, 2025, 9:49 pm

See More Tracking Events

What Do USPS Tracking Statuses Mean?

Get Real-Time Get of USPS Tracking
USPS Tracking Plus®

See More

Remove

Tracking Number:
9586971052703353376986
Copy Add to Informed Delivery

Latest Update
Your item was delivered to an individual at the address at 10:00 am on October 29, 2025 in AUSTIN, TX 78759.

Delivered
Delivered, Left with Individual
AUSTIN, TX 78759
October 29, 2025, 10:00 am

See More Tracking Events

What Do USPS Tracking Statuses Mean?

Get Real-Time Get of USPS Tracking
USPS Tracking Plus®

See More

Remove

Tracking Number:
9586971052703353376993
Copy Add to Informed Delivery

Latest Update
Your item has been delivered and is available at a PO Box at 10:57 am on October 29, 2025 in AUSTIN, TX 78704.

Delivered
Delivered, PO Box
AUSTIN, TX 78704
October 29, 2025, 10:57 am

See More Tracking Events

What Do USPS Tracking Statuses Mean?

Get Real-Time Get of USPS Tracking
USPS Tracking Plus®

See More

Remove

Tracking Number:
9586971052703353377006
Copy Add to Informed Delivery

Latest Update
Your item has been picked up at the post office at 12:45 pm on October 29, 2025 in MIDLAND, TX 79701.

Delivered
Delivered, Individual Picked Up at Post Office
MIDLAND, TX 79701
October 29, 2025, 12:45 pm

See More Tracking Events

What Do USPS Tracking Statuses Mean?

Get Real-Time Get of USPS Tracking
USPS Tracking Plus®

See More

Remove

Tracking Number:
9586971052703353377013
Copy Add to Informed Delivery

Latest Update
Your item has been delivered to the front desk, reception area, or mail room at 11:47 am on November 10, 2025 in MIDLAND, TX 79707.

Delivered
Delivered, Front Desk/Reception/Mail Room
MIDLAND, TX 79707
November 10, 2025, 11:47 am

See More Tracking Events

What Do USPS Tracking Statuses Mean?

Get Real-Time Get of USPS Tracking
USPS Tracking Plus®

See More

Remove

Tracking Number:
9586971052703353377020
Copy Add to Informed Delivery

Latest Update
Your item has been picked up at the post office at 12:45 pm on October 29, 2025 in MIDLAND, TX 79701.

Delivered
Delivered, Individual Picked Up at Post Office
MIDLAND, TX 79701
October 29, 2025, 12:45 pm

See More Tracking Events

What Do USPS Tracking Statuses Mean?

Get Real-Time Get of USPS Tracking
USPS Tracking Plus®

See More

Remove

Tracking Number:
9586971052703353377037
Copy Add to Informed Delivery

Latest Update
Your item has been picked up at the post office at 12:45 pm on October 29, 2025 in MIDLAND, TX 79701.

Delivered
Delivered, Individual Picked Up at Post Office
MIDLAND, TX 79701
October 29, 2025, 12:45 pm

See More Tracking Events

What Do USPS Tracking Statuses Mean?

Get Real-Time Get of USPS Tracking
USPS Tracking Plus®

See More

Remove

Tracking Number:
9586971052703353377044
Copy Add to Informed Delivery

Latest Update
Your item has been picked up at the post office at 12:45 pm on October 29, 2025 in MIDLAND, TX 79701.

Delivered
Delivered, Individual Picked Up at Post Office
MIDLAND, TX 79701
October 29, 2025, 12:45 pm

See More Tracking Events

What Do USPS Tracking Statuses Mean?

Get Real-Time Get of USPS Tracking
USPS Tracking Plus®

See More

STATE OF NEW MEXICO
ENERGY, MINERALS AND NATURAL RESOURCES DEPARTMENT
OIL CONSERVATION DIVISION

APPLICATION FOR SURFACE COMMINGLING
SUBMITTED BY XTO PERMIAN OPERATING, LLC **ORDER NO. CTB-1179**

ORDER

The Director of the New Mexico Oil Conservation Division ("OCD"), having considered the application and the recommendation of the OCD Engineering Bureau, issues the following Order.

FINDINGS OF FACT

1. XTO Permian Operating, LLC ("Applicant") submitted a complete application to surface commingle the gas production recovered using vapor recovery units ("VRU gas") from the pools, leases, and wells as described in Exhibit A ("Application").
2. Applicant proposed a method to allocate the VRU gas production to the pools, leases, and wells to be commingled based upon measuring the oil production from each pool, lease, and well.
3. Applicant provided notice of the Application to all persons owning an interest in the VRU gas production to be commingled, including the owners of royalty and overriding royalty interests, regardless of whether they have a right or option to take their interests in kind, and those persons either submitted a written waiver or did not file an objection to the Application.
4. Applicant provided notice of the Application to the Bureau of Land Management ("BLM") or New Mexico State Land Office ("NMSLO"), as applicable.
5. Applicant in the notice for the Application stated that it sought authorization to prospectively include additional pools, leases, and wells in accordance with 19.15.12.10 C.(4)(g) NMAC.
6. Applicant stated that it sought authorization to surface commingle and off-lease measure, as applicable, VRU gas production from wells which have not yet been approved to be drilled, but will produce from a pool and lease as described in Exhibit A.
7. This Order is associated with Order PLC-652-A and CTB-1176 which authorizes in-full or in-part the commingling of Oil production from the pools, leases, and wells as described in Exhibit A.

CONCLUSIONS OF LAW

8. OCD has jurisdiction to issue this Order pursuant to the Oil and Gas Act, NMSA 1978, §§ 70-2-6, 70-2-11, 70-2-12, 70-2-16, and 70-2-17, 19.15.12. NMAC, and 19.15.23. NMAC.

Released to Imaging: 12/23/2025 11:02:43 AM

9. Applicant satisfied the notice requirements for the Application in accordance with 19.15.12.10 A.(2) NMAC, 19.15.12.10 C.(4)(c) NMAC, and 19.15.12.10 C.(4)(e) NMAC, as applicable.

10. Applicant satisfied the notice requirements for the Application in accordance with 19.15.23.9 A.(5) NMAC and 19.15.23.9 A.(6) NMAC, as applicable.

11. Applicant's proposed method of allocation, as modified herein, complies with 19.15.12.10 B.(1) NMAC or 19.15.12.10 C.(1) NMAC, as applicable.

12. Commingling of VRU gas production from state, federal, or tribal leases shall not commence until approved by the BLM or NMSLO, as applicable, in accordance with 19.15.12.10 B.(3) NMAC and 19.15.12.10 C.(4)(h) NMAC.

13. Applicant satisfied the notice requirements for the subsequent addition of pools, leases, and wells in the notice for the Application, in accordance with 19.15.12.10 C.(4)(g) NMAC. Subsequent additions of pools, leases, and wells within Applicant's defined parameters, as modified herein, will not, in reasonable probability, reduce the commingled production's value or otherwise adversely affect the interest owners in the production to be added.

14. By granting the Application with the conditions specified below, this Order prevents waste and protects correlative rights, public health, and the environment.

ORDER

1. Applicant is authorized to surface commingle VRU gas production from the pools, leases, and wells as described in Exhibit A.

   Applicant is authorized to store and measure VRU gas production off-lease from the pools, leases, and wells as described in Exhibit A at a central tank battery or gas title transfer meter described in Exhibit A.

   Applicant is authorized to surface commingle VRU gas production from wells not included in Exhibit A but that produce from a pool and lease as described in Exhibit A.

   Applicant is authorized to store and measure VRU gas production off-lease from wells not included in Exhibit A but that produce from a pool and lease as described in Exhibit A at a central tank battery or gas title transfer meter described in Exhibit A.

2. The allocation of VRU gas production to wells not included in Exhibit A but that produce from a pool and lease as described in Exhibit A shall be determined in the same manner as to wells identified in Exhibit A that produce from that pool and lease, provided that if more than one allocation method is being used or if there are no wells identified in Exhibit A that produce from the pool and lease, then allocation of VRU gas production to each well not included in Exhibit A shall be determined by OCD prior to commingling production from it with the production from another well.

3. The allocation of VRU gas production shall be based on the production life of each well as measured for three periods: (a) the initial production period shall be measured from the first production until the earlier of either the peak production rate or thirty (30) days after the first production; (b) the plateau period shall be measured from the end of the initial production period to the peak decline rate; and (c) the decline period shall be measured from the end of the plateau period until the well is plugged and abandoned.

   During the initial production period, the VRU gas production for each well identified in Exhibit A shall be allocated using an oil production curve calculated from a minimum of ten (10) well tests per month, except that any day in which a well test cannot achieve an accurate result due to a temporary change in oil production shall not be included in the computation of time determining the well test schedule. The production curve shall be calculated by interpolating daily oil production for each day using the known daily oil production obtained by well tests and shall use a method of interpolation that is at minimum as accurate as maintaining a constant rate of change for each day's oil production between the known daily oil production values.

   During the plateau period, the VRU gas production for each well identified in Exhibit A shall be allocated using a minimum of three (3) well tests per month.

   During the decline period, the VRU gas production for each well identified in Exhibit A shall be allocated as follows: (a) a minimum of three (3) well tests per month when the decline rate is greater than twenty-two percent (22%) per month; (b) a minimum of two (2) well tests per month when the decline rate is between twenty-two percent (22%) and ten percent (10%) per month; and (c) a minimum of one (1) well test per month when the decline rate is less than ten percent (10%) per month.

   Upon OCD's request, Applicant shall submit a Form C-103 to the OCD Engineering Bureau that contains the decline rate curve and other relevant information demonstrating the production life of a well.

   Applicant shall conduct a well test by separating and metering the oil production from that well for either (a) a minimum of twenty-four (24) consecutive hours; or (b) a combination of nonconsecutive periods that meet the following conditions: (i) each period shall be a minimum of six (6) hours; and (ii) the total duration of the nonconsecutive periods shall be a minimum of eighteen (18) hours.

   The well test requirements of this Order shall be suspended for any well shut-in for a period that continues for more than fifteen (15) days until the well commences production.

4. Applicant shall measure and market the commingled gas at a well pad, central delivery point, central tank battery, or gas title transfer meter described in Exhibit A in accordance with this Order and 19.15.19.9. NMAC, provided however that if the gas is vented or flared, and regardless of the reason or authorization pursuant to 19.15.28.8 B. NMAC for such venting

or flaring, Applicant shall measure or estimate the gas in accordance with 19.15.28.8 E. NMAC.

5. Applicant shall calibrate the meters used to measure or allocate oil production in accordance with 19.15.12.10 C.(2) NMAC.

6. If the commingling of VRU gas production from any pool, lease, or well reduces the value of the commingled VRU gas production to less than if it had remained segregated, no later than sixty (60) days after the decrease in value has occurred Applicant shall submit a new surface commingling application to OCD to amend this Order to remove the pool, lease, or well whose VRU gas production caused the decrease in value. If Applicant fails to submit a new application, this Order shall terminate on the following day, and if OCD denies the application, this Order shall terminate on the date of such action.

7. Applicant may submit an application to amend this Order to add pools, leases, and subsequently drilled wells with spacing units adjacent to or within the tracts commingled by this Order by submitting a Form C-107-B in accordance with 19.15.12.10 C.(4)(g) NMAC, provided the pools, leases, and subsequently drilled wells are within the identified parameters included in the Application.

8. If a well is not included in Exhibit A but produces from a pool and lease as described in Exhibit A, then Applicant shall submit Forms C-102 and C-103 to the OCD Engineering Bureau after the well has been approved to be drilled and prior to off-lease measuring or commingling oil or gas production from it with the production from another well. The Form C-103 shall reference this Order and identify the well, proposed method to determine the allocation of VRU gas production to it, and the location(s) that commingling of its production will occur.

9. Applicant shall not commence commingling oil or gas production from state, federal, or tribal leases until approved by the BLM or NMSLO, as applicable.

10. If OCD determines that Applicant has failed to comply with any provision of this Order, OCD may take any action authorized by the Oil and Gas Act or the New Mexico Administrative Code (NMAC).

11. OCD retains jurisdiction of this matter and reserves the right to modify or revoke this Order as it deems necessary.

STATE OF NEW MEXICO
OIL CONSERVATION DIVISION

Albert Chang

ALBERT C. S. CHANG
DIRECTOR

DATE: 12/20/2025

State of New Mexico
Energy, Minerals and Natural Resources Department

Exhibit A

Order: CTB-1179
Operator: XTO Permian Operating, LLC (373075)
Central Tank Battery: Big Eddy Unit DI 30 Central Tank Battery - VRU ONLY
Central Tank Battery Location: UL I, Section 15, Township 20 South, Range 31 East
Gas Title Transfer Meter Location: UL I, Section 15, Township 20 South, Range 31 East

Pools

Pool Name	Pool Code
WC WILLIAMS SINK; BONE SPRING	97650

Leases as defined in 19.15.12.7(C) NMAC

Lease	UL or Q/Q	S-T-R
PA Bone Spring NMNM 105693911 (068294T)	ALL	13-20S-31E
	ALL	14-20S-31E
	S2SE	22-20S-31E
	ALL	23-20S-31E
	ALL	24-20S-31E
	ALL	25-20S-31E
	ALL	26-20S-31E
	E2	27-20S-31E
	ALL	17-20S-32E
	ALL	18-20S-32E
	ALL	19-20S-32E
	ALL	20-20S-32E
	ALL	21-20S-32E
	ALL	28-20S-32E
	ALL	29-20S-32E
	ALL	30-20S-32E
BLM Lease NMNM 105450686 (NMLC 0065944)	W2NE, W2NW	22-20S-31E
BLM Lease NMNM 105462650 (NMLC 0065944A)	E2NE, E2NW	22-20S-31E
BLM Lease NMNM 105465561 (0001083)	N2	20-20S-31E
BLM Lease NMNM 105443675 (0004082)	E2, E2W2	17-20S-31E
	W2NE, NW4	21-20S-31E
BLM Lease NMNM 105647601 (NMLC 0065874A)	E2NE	21-20S-31E
SLO Lease B1-0621-0001	SENE	16-20S-31E
SLO Lease E0-0264-0007	N2NE, E2NW, SWNE, SE4	16-20S-31E
SLO Lease E0-5230-0007	W2NW, SW4	16-20S-31E
BLM Lease NMNM 105507748 (NMLC 0063667)	E2, E2W2	15-20S-31E
BLM Lease NMNM 105509624 (NMLC 0070220)	W2W2	15-20S-31E
	W2W2	17-20S-31E

Wells

Well API	Well Name	UL or Q/Q	S-T-R	Pool
30-015-46199	BIG EDDY UNIT 30E QUI GON #102H	S2 S2	13-20S-31E 14-30S-31E	97650
30-015-48159	BIG EDDY UNIT 30E QUI-GON #103H	N2 N2	23-20S-31E 24-20S-31E	97650
30-015-46244	BIG EDDY UNIT 30 REY #102H	S2S2 S2S2	13-20S-31E 14-30S-31E	97650
30-015-46196	BIG EDDY UNIT 30E OBI WAN #102H	N2S2 N2S2	13-20S-31E 14-30S-31E	97650
30-015-48156	BIG EDDY UNIT 30E REY #103H	N2 N2	23-20S-31E 24-20S-31E	97650
30-015-46194	BIG EDDY UNIT 30E SKYWALKER #100H	N2 N2	13-20S-31E 14-30S-31E	97650
30-015-46195	BIG EDDY UNIT 30E SKYWALKER #101H	N2 N2	13-20S-31E 14-30S-31E	97650
30-015-46933	BIG EDDY UNIT 30E SKYWALKER #102H	N2 N2	13-20S-31E 14-30S-31E	97650
30-015-46935	BIG EDDY UNIT 30E SKYWALKER #103H	S2 S2	13-20S-31E 14-30S-31E	97650
30-015-46937	BIG EDDY UNIT 30E SKYWALKER #104H	N2 N2	23-20S-31E 24-20S-31E	97650
30-015-46938	BIG EDDY UNIT 30E SKYWALKER #105H	N2 N2	23-20S-31E 24-20S-31E	97650
30-015-55795	BIG EDDY UNIT DI 30 WEST 15 20 #007H	N2 N2 N2	20-20S-31E 21-20S-31E 22-20S-31E	97650
30-015-55743	BIG EDDY UNIT DI 30 WEST 15 20 #008H	N2 N2 N2	20-20S-31E 21-20S-31E 22-20S-31E	97650
30-015-55744	BIG EDDY UNIT DI 30 WEST 15 20 #009H	N2 N2 N2	20-20S-31E 21-20S-31E 22-20S-31E	97650
30-015-55791	BIG EDDY UNIT DI 30 WEST 15 17 #001H	N2 N2 N2	15-20S-31E 16-20S-31E 17-20S-31E	97650
30-015-55792	BIG EDDY UNIT DI 30 WEST 15 17 #002H	N2 N2 N2	15-20S-31E 16-20S-31E 17-20S-31E	97650
30-015-55796	BIG EDDY UNIT DI 30 WEST 15 17 #003H	N2 N2 N2	15-20S-31E 16-20S-31E 17-20S-31E	97650
30-015-55793	BIG EDDY UNIT DI 30 WEST 15 17 #004H	S2 S2 S2	15-20S-31E 16-20S-31E 17-20S-31E	97650

30-015-55848	BIG EDDY UNIT DI 30 WEST 15 17 #005H	S2 S2 S2	15-20S-31E 16-20S-31E 17-20S-31E	97650
30-015-55794	BIG EDDY UNIT DI 30 WEST 15 17 #006H	S2 S2 S2	15-20S-31E 16-20S-31E 17-20S-31E	97650

Sante Fe Main Office
Phone: (505) 476-3441

General Information
Phone: (505) 629-6116

Online Phone Directory
https://www.emnrd.nm.gov/ocd/contact-us

State of New Mexico
Energy, Minerals and Natural Resources
Oil Conservation Division
1220 S. St Francis Dr.
Santa Fe, NM 87505

CONDITIONS

Action 520284

CONDITIONS

Operator: XTO PERMIAN OPERATING LLC. 6401 HOLIDAY HILL ROAD MIDLAND, TX 79707	OGRID: 373075
	Action Number: 520284
	Action Type: [C-107] Surface Commingle or Off-Lease (C-107B)

CONDITIONS

Created By	Condition	Condition Date
sarah.clelland	Please review the content of the order to ensure you are familiar with the authorities granted and any conditions of approval. If you have any questions regarding this matter, please email us at OCD.Engineer@emnrd.nm.gov.	12/23/2025