Case No.

1210

Application, Transcript,
Small Exhibits, Etc.

BEFORE THE
OIL CONSERVANTION COMMISSION
SANTA FE, NEW MEXICO

IN THE MATTER OF:

Case No. 1210

TRANSCRIPT OF PROCEEDINGS

DEARNLEY - MEIER & ASSOCIATES
GENERAL LAW REPORTERS
ALBUQUERQUE - SANTA FE
3-6691 2-2211

February 20, 1957

[illegible]

[illegible]:

[illegible]
[illegible]
10 Well in the Blinebry Oil Pool and the [illegible]
Gas Pool, Lea County, New Mexico, [illegible]
[illegible]
[illegible]
Applicant, [illegible]
[illegible]
[illegible]
[illegible]
[illegible]
[illegible]
[illegible]
[illegible]
[illegible]
[illegible]
[illegible]
casing-tubing [illegible] similar [illegible]
of a cross-over assembly.

Case No. 1210

[illegible]:

[illegible]

[illegible]

[illegible]

[illegible]

[illegible]

[illegible]

MR. CAMPBELL: Mr. Examiner, I am Jack M. Campbell of Campbell and Russell, Roswell, New Mexico, appearing on behalf of the applicant, Neville G. Penrose, Case No. 1210. I have one witness to be sworn, Mr. McLaughlin.

MR. NUTTER: Mr. Campbell, before proceeding into this case, Paragraph Two in the application states that applicant proposes to dually complete the above described well, producing Blinebry well, through the casing-annulus, and Tubb gas through the tubing. However, Exhibit B attached to the application indicates that the production would be otherwise. Do you care to make a comment on that statement?

MR. CAMPBELL: Mr. Examiner, I would like request to amend the application on Paragraph Two to reflect the same proposed completion as is indicated in the diagrammatic sketch attached to the application, which is to produce oil from Blinebry Oil Pool through the tubing by means of a cross-over assembly, and gas from the Tubb Gas Pool through the tubing to the producing zone of the Blinebry Oil Pool, and flowing through the casing-tubing annulus to the surface.

MR. NUTTER: Your amendment is satisfactory. Thank you.

(Witness sworn.)

[illegible]

[illegible], testified as follows:

DIRECT EXAMINATION

BY: MR. CAMPBELL:

Q Will you state your name, please?

A John P. McNaughle.

Q And by whom are you employed, Mr. McNaughle?

A Neville G. Penrose, Inc.

Q In what capacity?

A Vice president and engineer.

Q In your capacity as an engineer, professional capacity, have you testified previously before the New Mexico Oil Conservation Commission? A Yes, sir.

Q Are you acquainted with the application of Neville G. Penrose, Inc., in case No. 1210, relating to proposed dual completing of your Hinton No. 10 Well? A I am.

Q Will you state to the Examiner generally what you propose to do?

A Our Hinton No. 10 currently is producing through perforations opposite the Blinebry oil zone, and we propose to perforate the casing opposite the [illegible] and by means of a cross-over assembly, produce the [illegible] through the tubing-casing annulus, and the Blinebry oil through the tubing.

MR. CAMPBELL: Will you please mark this as Exhibit No. [illegible]

(Penrose's Exhibits Nos. 1 and 2 marked for identification.)

Q Will you please, Mr. McNaughle, give for the record, some completion data and producing history on the Hinton No. 10 Well, please?

A The Hinton No. 10 was spudded on October 6, 1948 and was completed on November 28, 1948. It was drilled to the Drinkard section, and attempt was made at that time to complete the well in the Drinkard section, but this attempt was unsuccessful and the well was plugged back into the five and a half inch casing, which is set at 6327. Casing was then perforated opposite the Blinebry section as so noted on the exhibit, and the well was brought into production from that zone. Currently, the well is producing approximately six barrels of oil with a small fraction of a barrel of water per day. In 1956, there was a total of 2178 barrels of oil sold from this one well. The gas-oil ratio on recent test, was 16,831, and on that test, it calculated approximately one hundred and ten thousand cubic feet of gas per day from the Blinebry section. The gravity of the oil is thirty-eight degrees, this Blinebry oil is thirty-eight degrees. The total depth of the well is 6555.

Q I hand you what has been marked as Penrose's Exhibit No. 1 in this case, and ask you to state what this is?

A This is a diagrammatic sketch indicating the present

status of the well after the dual completion equipment had been installed.

Q Will you state generally and briefly what that diagrammatic sketch indicates and what you propose to do?

A This indicates that we plan to set production packers at approximately forty-five hundred, and fifty-seven fifty, a tubing extending through both packers, and with a cross-over assembly which probably will include a two-zone flow tube, as indicated in the sketch in the upper packer. This will allow oil to be produced from the Blinebry section through this two-zone flow tube and a cross-over choke assembly into the tubing, and thence through the tubing, to the surface. It also shows that the Tubb gas will be produced through the tubing up through the cross-over assembly at approximately fifty-four hundred, and from thence into the tubing-casing annulus and into the surface.

Q I hand you what has been identified as [illegible]'s Exhibit No. 2 and ask you, for the purpose of identification, to state what that is?

A This is a proposed procedure in the completion [illegible] for dual completion.

Q That is the procedure you have outlined, is it [illegible]?

A That's correct.

[illegible]: I would like to offer exhibits [illegible]. I and

and 2 into evidence in this case.

MR. NUTTER: Without objection, these exhibits will be received.

Q Mr. McNaughle, in your opinion, if this application is approved, and the procedures which you contemplated are used, do you believe that this dual completion can be made and produced without waste? A Yes, sir.

Q You believe that the two separate zones of Blinebry oil zone, and the Tubb gas will be completely separated?

A Yes, sir.

MR. CAMPBELL: That's all.

MR. NUTTER: Does anyone have any questions of the witness?

MR. MANKIN: Yes, I do.

MR. NUTTER: Mr. Mankin.

CROSS EXAMINATION

BY: MR. MANKIN:

Q Mr. McNaughle, have you performed any kind of test on the Tubb to determine its flowing characteristics or the amount of liquids produced? A No, sir.

Q Has it been -- How do you know that it will produce, then?

A We anticipate that it will produce from the Tubb section inasmuch as the northeast offset to this well is currently producing

from the Tubb section. Our Hinton No. 3 located in the SE/4 of the SW/4 of Section 12, 22, 37, is currently producing as a dual gas well, producing from the Blinebry and the Tubb gas sections, and on the recommendation of the geologist, who worked for us, we feel that we can produce a commercial well from the Tubb section.

Q The reason I am asking that question is because you propose to move this gas through the casing -- I mean through the tubing, apparently to the -- approximately to the Blinebry, and thence to the casing-tubing annulus, is that correct?

A That's correct.

Q My question is, if it is producing any quantities of liquid, do you feel that you will get proper flow after it reaches the annulus flow, do you have any knowledge of it?

A The amount of the liquid?

Q Amount of liquid that will have to be lifted with this gas.

A Our Hinton No. 3 produces approximately ten barrels of liquid per million cubic feet of gas, and I am hopeful that we can produce as much, or more than that from this well.

Q Do you feel that in this neighborhood of ten barrels per million, that you will be able to produce [illegible] the liquid [illegible]

A I think we can produce it, yes, sir. I hope that [illegible] it will be as efficient as it would be [illegible]

gas through the tubing, but we made an attempt to do that last August, and the Commission denied our request, and that is the reason we are requesting the cross-over packer.

Q You mentioned some other wells in the area, one which you had in Section 12, which was a gas-oil dual from the Blinebry.

A No, it is gas-gas.

Q I mean gas-gas. Was that producing around ten barrels per million, that particular well?

A Approximately that amount.

Q From the Tubb?

A From the Tubb, and also from the Blinebry.

Q What kind of completion is that gas well, is it tubing-tubing, or --

A Tubing-casing annulus.

Q But the Tubb gas is being produced through the tubing?

A Yes, sir, that's correct, and the Blinebry is being produced [illegible]

[illegible]

[illegible]

[illegible]

linetry in that particular well?

A We have some tests on those wells, but, of course, they are not under consideration here and I didn't [illegible] information with me, [illegible] usually use ten barrels per [illegible] pretty close to being correct. Actually, [illegible]

[illegible]

[illegible]

[illegible] to [illegible]

pressure. The equipment [illegible] a [illegible] to [illegible]

a [illegible] [illegible], but [illegible]

[illegible].

[illegible]

[illegible]

[illegible] reverse [illegible]

[illegible]

[illegible]

MR. MANKIN: That's all.

BY: MR. NUTTER:

Q Mr. McNaughle, when that five and a half inch pipe was set at 6372 feet, how many sacks were used in cementing it?

A 352 sacks of cement.

Q How far up the casing annulus did that cement come?

A We don't have the temperature survey, and I haven't calculated how far it would come. However, you will note on Exhibit No. 2, that we intend to run a dowell spinner survey in an attempt to check any possible choking leaks, and also to test the bottom hole pressure in the casing, and also if there is any indication that the casing is in bad condition, it most certainly will be repaired before the completion attempt is finished.

Q Running the dowell spinner survey would not necessarily give any indication of any communication on the outside of the casing between the two zones, however, would it?

A No, sir, not necessarily. The proposal is that we run that dowell spinner survey before the [illegible] is performed. I think probably I got [illegible] the question you asked me. We have no way of knowing exactly [illegible] the five and a half inch casing, except by calculation, and without calculating it, I feel sure that the 352 sacks has completely covered the liner [illegible]

and the Tubb section is below that section, so all we can do is assume that the casing is adequate and cemented around the Tubb section. However, if in this completion we do find that there is an indication of a bad cement job, well, we will just have to take that problem as it comes to us.

Q If there is an indication that the cement job between the Blinebry and Tubb Formations is not adequate, it can be perforated and squeezed, cemented?

A That is correct. In the process of completion, it will be necessary for us to take packer leakage test, and in some way prove that the zones are separated, and we, of course, will do that. I believe that's a requirement of the Commission in all dual completions.

MR. NUTTER: I think that is all. Does anyone else have a question of the witness?

MR. UTZ: Yes, sir, I have one.

MR. NUTTER: Mr. Utz.

BY: MR. UTZ:

Q Mr. McHaughle, maybe you stated this and I didn't catch it if you did. What size tube is the well being completed in?

A Two inches.

Q Two inches? A Yes, sir.

Q The cross-sectional area of the tubing-casing annulus

is much greater than the cross-sectional area of the two inch tubing, is that right? A That is correct, sir.

Q Therefore, your Tubbs Formation producing through the annulus will have to produce at a much higher rate in order to maintain enough velocity, will it not, if it were -- than it would with a two inch tube? A Yes, sir.

Q With five inch casing you couldn't run two strings of casing, could you?

A We could, but it would complicate the situation materially. As I stated a moment ago, we had previously requested permission to produce the zone parallel, in other words, let the Blinebry section produce through the tubing-casing annulus because of the fact that we didn't feel that there would be waste, and because of the small amount of oil being produced from the Blinebry section. Now, we feel it is necessary to keep down the cost where ever possible, and I believe that the cost of running two strings would almost be prohibitive, and probably would preclude our completing this job as indicated. We feel that this is a second-best way to do it, and we were denied the first way, the best way we thought we could do it.

Q A gas line plugged up with drilling mud does not produce much gas, does it?

A That's correct, sir, and that's one reason for having

our control system whereby we can reverse the flow and bring out any liquid from the surface from the tubing-casing annulus if necessary.

MR. UTZ: That's all I have.

MR. NUTTER: That reversing would be merely for cleaning out the well? A That's correct, yes.

MR. NUTTER: Anyone else have any questions? If not, the witness may be excused. Does anyone have anything further in this case? If not, we will take the case under advisement and proceed to Case No. 1211.

****

STATE OF NEW MEXICO)
) ss
COUNTY OF BERNALILLO)

I, J. A. Trujillo, Notary Public in and for the County of Bernalillo, State of New Mexico, do hereby certify that the foregoing and attached Trnascript of Hearing before the New Mexico Oil Conservation Commission was reported by me in Stenotype and reduced to typewritten transcript by me; and that same is a true and correct record to the best of my knowledge, skill, and ability.

WITNESS my Hand and seal, this the 1st day of March, 1957, in the City of Albuquerque, County of Bernalillo, State of New Mexico.

J. A. Trujillo
NOTARY PUBLIC

My Commission Expires:

October 5, 1960

OIL CONSERVATION COMMISSION
P. O. BOX 871
SANTA FE, NEW MEXICO

March 11, 1957

COPY

Mr. Jack M. Campbell
Campbell & Russell
P.O. Box 721
Roswell, New Mexico

Dear Sir:

On behalf of your client, Neville G. Penrose, Inc., we enclose two copies of Order R-960 issued March 8, 1957, by the Oil Conservation Commission in Case 1210, which was heard on February 20th at Santa Fe.

Very truly yours,

A. L. Porter, Jr.
Secretary - Director

bp
Encls.

BEFORE THE OIL CONSERVATION COMMISSION
OF THE STATE OF NEW MEXICO

IN THE MATTER OF THE HEARING CALLED BY THE OIL CONSERVATION COMMISSION OF THE STATE OF NEW MEXICO FOR THE PURPOSE OF CONSIDERING:

CASE NO. 1210
Order No. R-960

IN THE MATTER OF THE APPLICATION OF NEVILLE G. PENROSE, INC. FOR AN ORDER AUTHORIZING A DUAL COMPLETION IN THE BLINEBRY OIL POOL AND TUBB GAS POOL IN LEA COUNTY, NEW MEXICO.

ORDER OF THE COMMISSION

BY THE COMMISSION:

This cause came on for hearing at 10:00 o'clock a.m. on February 20, 1957, at Santa Fe, New Mexico, before Daniel S. Nutter, Examiner duly appointed by the Oil Conservation Commission of New Mexico, hereinafter referred to as the "Commission," in accordance with Rule 1214 of the Commission Rules and Regulations.

NOW, on this 8th day of March, 1957, the Commission, a quorum being present, having considered the application, the evidence adduced and the recommendations of the Examiner Daniel S. Nutter, and being fully advised in the premises,

FINDS:

(1) That due notice having been given as required by law, the Commission has jurisdiction of this case and the subject matter thereof.

(2) That the applicant is the owner and operator of the Hinton No. 10 Well, located 660 feet from the North line and 330 feet from the West line of Section 13, Township 22 South, Range 37 East, NMPM, Lea County, New Mexico.

(3) That the applicant proposes to dually complete the said Hinton No. 10 Well so as to permit the production of oil from the Blinebry Oil Pool through the tubing by means of a cross-over assembly and the production of gas from the Tubb Gas Pool through the tubing to the producing horizon of the Blinebry Oil Pool and thence through the casing-tubing annulus to the surface by means of a cross-over assembly.

(4) That the mechanics of the proposed dual completion are feasible and consonant with good conservation practices.

(5) That the dual completion of the said Hinton No. 10 Well as outlined above will not cause waste or impair correlative rights.

IT IS THEREFORE ORDERED:

1. That the applicant, Neville G. Penrose, Inc., be and it is hereby authorized to dually complete its Hinton No. 10 Well located 660 feet from the North line and 330 feet from the West line of Section 13, Township 22 South, Range 37 East, NMPM, Lea County, New Mexico, [illegible]

the Blinebry Oil Pool through the tubing by means of a cross-over assembly and the production of gas from the Tubb Gas Pool through the tubing to the producing horizon of the Blinebry Oil Pool and thence through the casing-tubing annulus to the surface by means of a cross-over assembly.

PROVIDED HOWEVER, That upon the actual dual completion of said subject well, applicant shall submit to the district office of the Commission in which the subject well is located Form C-104, Form C-110 and Form C-122, outlining the information required on these forms by existing Rules and Regulations.

PROVIDED HOWEVER, That subject well shall be completed and thereafter produced in such a manner that there will be no commingling within the well bore either within or outside the casing of gas, oil, or gas and oil produced from either or both of the separate strata, and

PROVIDED FURTHER, That said subject well for dual completion and production shall be equipped in such a way that reservoir pressures may be determined separately for each of the two specified strata and further be equipped with all necessary connections required to permit recording meters to be installed and used at any time as may be required by the Commission or its representatives in order that natural gas, or oil and gas from each separate stratum may be accurately measured and the gas-oil ratio thereof determined, and

PROVIDED FURTHER, That the operator-applicant shall make any and all tests, including segregation tests and packer leakage tests on completion and annually thereafter during the first GOR Test period each year for the Blinebry Oil Pool, commencing with the First-Half Test Period for 1958, but not excluding other tests and/or determinations at any convenient time and in such manner as deemed necessary by the Commission; the original and all subsequent tests shall be witnessed by representatives of offset operators if any there be at their election, and the results of each test properly attested to by the applicant herein, and all witnesses and shall be filed with the Commission within fifteen (15) days after the completion of such test and further, that operator shall submit a packer-setting affidavit within 15 days of completion, after remedial work, or whenever the packer is disturbed, and

PROVIDED FURTHER, That upon the actual dual completion of such subject well, applicant shall submit to the Commission a diagrammatic sketch of the mechanical installation which was actually used to complete and produce the zone between the strata and a special report on production gas-oil ratio and reservoir pressure determination of each producing zone or stratum immediately following completion.

IT IS FURTHER ORDERED: That jurisdiction of this cause is hereby retained by the Commission for such further order or orders as may seem necessary or convenient for the prevention of waste and/or protection of correlative rights. Upon full [illegible]

applicant to comply with any requirement of this order after proper notice and hearing, the Commission may terminate the authority hereby granted and require applicant or its successors and assigns to limit its activities to regular single-zone production in the interests of conservation.

DONE at Santa Fe, New Mexico, on the day and year hereinabove designated.

STATE OF NEW MEXICO
OIL CONSERVATION COMMISSION

EDWIN L. MECHEM, Chairman

MURRAY E. MORGAN, Member

A. L. PORTER, Jr., Member & Secretary

ir/

BEFORE THE OIL CONSERVATION COMMISSION
OF THE STATE OF NEW MEXICO

IN THE MATTER OF THE HEARING
CALLED BY THE OIL CONSERVATION
COMMISSION OF THE STATE OF NEW
MEXICO FOR THE PURPOSE OF
CONSIDERING:

CASE NO. 1059
Order No. R-808

THE APPLICATION OF THE TEXAS
COMPANY FOR AN ORDER GRANTING
PERMISSION TO DUALLY COMPLETE
ITS A. H. BLINEBRY (NCT-1) WELL
NO. 7 IN THE BLINEBRY OIL POOL
AND TUBB GAS POOL, SAID WELL BEING
LOCATED IN THE SW/4 NE/4 OF SECTION
19, TOWNSHIP 22 SOUTH, RANGE 38
EAST, NMPM, LEA COUNTY, NEW MEXICO.

ORDER OF THE COMMISSION

BY THE COMMISSION:

This cause came on for hearing at 9 a.m. on April 25, 1956 at Hobbs, New Mexico, before Warren W. Mankin, Examiner duly appointed by the Oil Conservation Commission of New Mexico, in accordance with Rule 1214 of the Commission's Statewide Rules and Regulations.

NOW, on this 28th day of May 1956, the Oil Conservation Commission of New Mexico, hereinafter referred to as the "Commission", a quorum being present, having considered said application, the evidence adduced, and the recommendations of the Examiner, Warren W. Mankin and being fully advised in the premises,

FINDS:

(1) That due notice of the time and place of hearing and the purpose thereof having been given as required by law, the Commission has jurisdiction of this case and the subject matter thereof.

(2) That the applicant, The Texas Company is the owner and operator of its A. H. Blinebry (NCT-1) Federal Lease, comprising among lands, the E/2 of Section 19, Township 22 South, Range 38 East, and containing 320 acres more or less and lying within the horizontal limits of the Tubb Gas Pool and the Blinebry Oil Pool, Lea County, New Mexico. That applicant's well, A. H. Blinebry (NCT-1) Well No. 7, is located 1980 feet from the North line and 1974 feet from the East line of Section 19, Township 22 South, Range 38 East, and is presently producing from the Blinebry Oil Pool.

(3) That the applicant proposes to produce gas from the Tubb Gas Pool through casing-tubing annulus and oil from the Blinebry Oil Pool through the tubing.

(4) That the methods of the proposed dual completion as outlined by applicant are [illegible] and in good practice.

Not federal on wells

IT IS THEREFORE ORDERED:

That the applicant herein, the Texas Company, be and it is hereby authorized to dually complete and produce the [illegible] Blinebry (NGPA-1) Well No. 7, located [illegible] feet from the North line and 1871 feet from the East line of Section 15, Township 22 South, Range 36 East, Lea County, New Mexico, in such a manner that the gas from the Tubb formation of the Tubb Gas Pool by proper perforations of the casing shall be produced through tubing to the crossover nipple and then through the casing-tubing annulus to the surface; and oil from the Blinebry formation of the Blinebry Oil Pool may be produced by proper perforations of the casing through the casing-tubing annulus through a crossover nipple and through the tubing to the surface.

copy

PROVIDED HOWEVER That upon the actual dual completion of said subject well, applicant shall submit to the district office of the Commission in which the subject well is located, Form C-105, Form C-104, Form C-110 and Form C-1[illegible], outlining the information required on these forms by existing Rules and Regulations.

PROVIDED HOWEVER, That subject well shall be completed and thereafter produced in such a manner that there will be no commingling within the well bore either within or outside the casing of gas, oil and gas or oil produced from either or both of the separate strata, and

PROVIDED FURTHER That said subject well for dual completion and production shall be equipped in such a way that reservoir pressures may be determined separately for each of the two specified strata and further be equipped with all necessary connections required to permit the recording meters to be installed and used at any time as may be required by the Commission or its representative in order that natural gas, oil and gas from each separate stratum may be accurately measured and the gas-oil ratio thereof determined.

PROVIDED FURTHER That the operator-applicant shall make any and all tests, including segregation tests, ~~and submitting affidavit~~ and packer leakage tests on [illegible] annually thereafter during the annual [illegible] of the [illegible] excluding other tests and/or [illegible] as deemed necessary by the Commission. [illegible] subsequent tests shall be witnessed by [illegible] if any there be at their election, and be required [illegible] attested to by the applicant herein. [illegible] in the Commission within ten ([illegible]) days after the completion, the [illegible] a packer setting affidavit with [illegible] completion, the [illegible] or whether the packer is in the hole [illegible] completion of such subject [illegible] diagrammatic sketch [illegible] used to complete and produce the [illegible] production gas-oil [illegible] pressure determination of each producing zone

or stratum immediately following completion.

IT IS FURTHER ORDERED: That jurisdiction of this cause is hereby retained by the Commission for such further order or orders as may seem necessary or convenient for the prevention of waste and/or protection of correlative rights. Upon failure of applicant to comply with any requirement of this order after proper notice and hearing, the Commission may terminate the authority hereby granted and require applicant or its successors and assigns to limit its activities to regular single-zone production in the interests of conservation.

DONE at Santa Fe, New Mexico, on the day and year hereinabove designated.

STATE OF NEW MEXICO
OIL CONSERVATION COMMISSION

JOHN F. SIMMS, Chairman

E. S. WALKER, Member

A. L. PORTER, Jr., Member and Secretary

S E A L

ir/

Hau 2/20/57

OIL CONSERVATION COMMISSION
SANTA FE, NEW MEXICO

Date 2/20/57

CASE 1210 Hearing Date 10 am on 2/20/57

My recommendations for an order in the above numbered cases are as follows:

Recommend approval of dual as applied for.

Warren W Mankin
Staff Member

OIL CONSERVATION COMMISSION
SANTA FE, NEW MEXICO

Date 2/21/57

CASE 1210 Hearing Date 2/20/57

My recommendations for an order in the above numbered cases are as follows:

Enter an order approving the dual completion sought by N. G. Penrose in this case.

While the applicant was previously denied permission for the dual completion principally because he planned to produce the Blinebry Oil thru the tubing casing annulus and the Tubb Gas thru the tubing, this presently proposed dual would reverse the flow and allow the oil to be produced thru the tubing. There is basically nothing wrong with this procedure.

The questionable fact in the consideration of this dual lies in the question as to the top of the cement around the 7" casing. No temp survey was run. However 350 sx were used in cementing this string and by the most conservative methods of calculation, it would appear that this was ample cement to adequately separate the Tubb and Blinebry formations. Further there is sufficient pressure control in the area that it should be possible to detect any variation from the normal pressures for either zone should leakage between the zones occur outside the pipe within the well-bore.

Staff Member

Daniel S. Nutter
Examiner

BEFORE THE OIL CONSERVATION COMMISSION

STATE OF NEW MEXICO

IN THE MATTER OF THE APPLICATION OF NEVILLE G. PENROSE, INC., FOR AN ORDER PERMITTING DUAL COMPLETION OF ITS HINTON #10 WELL IN THE BLINEBRY OIL POOL AND THE TUBB GAS POOL, SAID WELL BEING LOCATED IN THE NW¼NW¼, SECTION 13, TOWNSHIP 22 SOUTH, RANGE 37 EAST, N.M.P.M., LEA COUNTY, NEW MEXICO.	No. 1210

APPLICATION

COMES NOW, NEVILLE G. PENROSE, INC., by its attorneys, CAMPBELL & RUSSELL, Roswell, New Mexico, and applies to the Commission for permission to dually complete its Hinton #10 Well, located NW¼NW¼, Section 13, Township 22 South, Range 37 East, Lea County, New Mexico, as an oil well producing oil in the Blinebry Oil Pool and a gas we[illegible] Tubb Gas Pool, Lea County, New Mexico, an[illegible] es:

1. Applica[illegible] is [illegible] of its Hinton #10 Well situated in the NW¼NW [illegible] 22 South, Range 37 East, Lea County, New Mexico.

amended as heretofore on file in Ex. "B"

2. Applicant proposes to d[illegible] above described well producing Blinebry oil through [illegible] and Tubb Gas through the tubing.

3. Applicant submits with th[illegible] Exhibit "A", showing the location of wells on Appl[illegible] and a[illegible] offset wells on offset leases.

4. Applicant submits herewith [illegible] "[illegible]", [illegible] a [illegible] grammatic sketch of the present status [illegible] status of [illegible] Hinton #10 Well.

5. Applicant can produce the [illegible] that there will be no commingling wit[illegible]

or outside the casing, of oil or gas produced from either or both of the separate strata involved.

6. If this application be granted, Applicant will make all required tests, and furnish all required information to the Commission concerning the operation of the proposed dually completed well.

WHEREFORE, Applicant requests that the Commission set this matter down before an Examiner in Santa Fe, New Mexico, and after hearing, enter its Order permitting Applicant to dually complete its Hinton #10 Well as a Blinebry Oil Well and Tubb Gas Well.

Respectfully submitted,

NEVILLE G. PENROSE, INC.

By: _____
CAMPBELL & RUSSELL, Attorneys

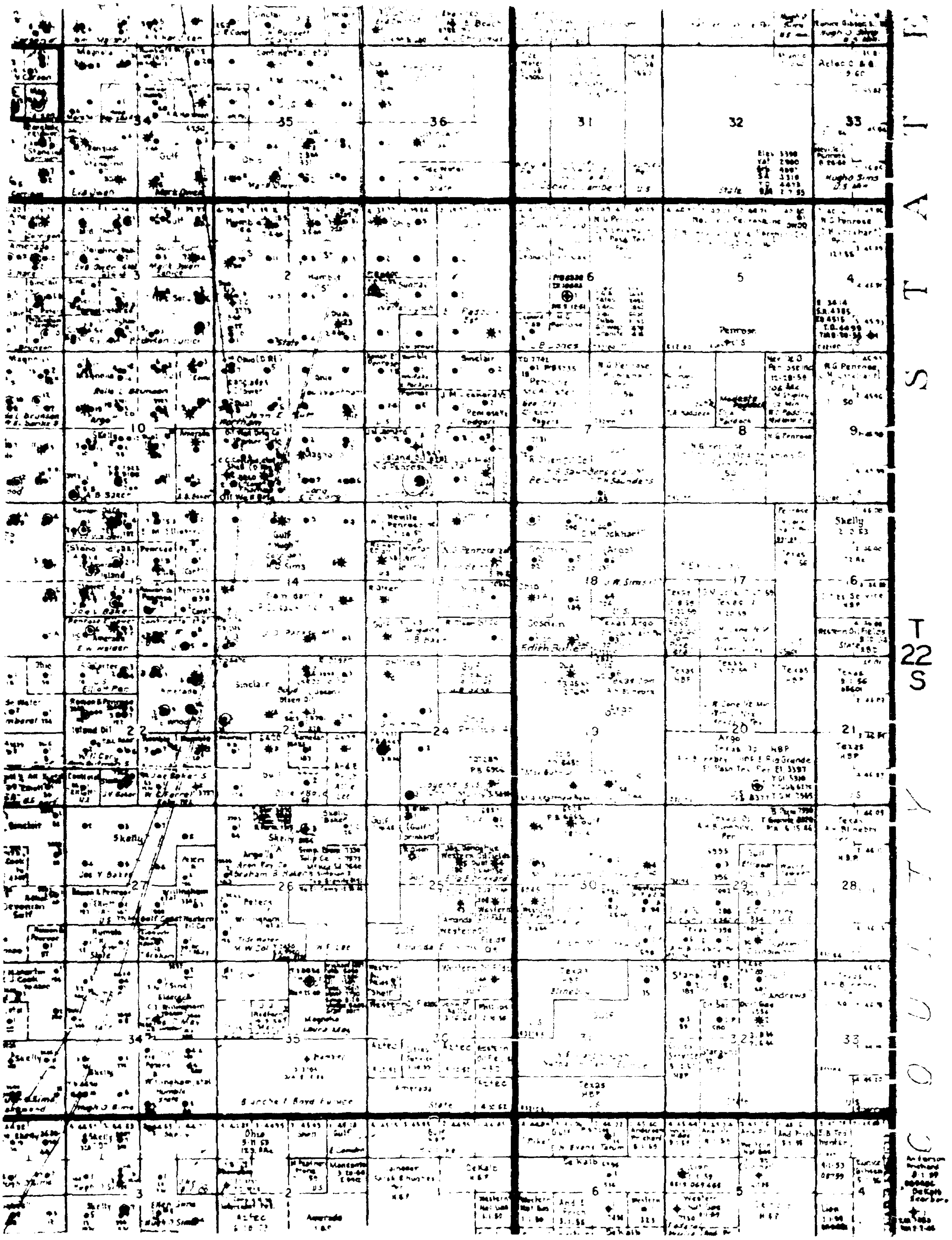

T 22 S
34
35
36
31
32
33
Gulf
Aztec
Hugh D. Sims
State
3
2
1
6
5
4
Humble
Penrose
R G Penrose
Sinclair
10
11
12
7
8
9
Argo
Shell
Magnolia
Amerada
15
14
13
18
17
16
Skelly
Texas
22
23
24
19
20
21
Sinclair
Ohio
27
26
25
30
29
28
Skelly
Western Oil Fields
Gulf
34
35
36
31
32
33
Texas
Amerada
State
3
2
6
5
4
Aztec
DeKalb

NEVILLE G. PENROSE, INC.

Hinton 10, NW/4 NW/4, Section 13, T22S-R37E

PRESENT STATUS

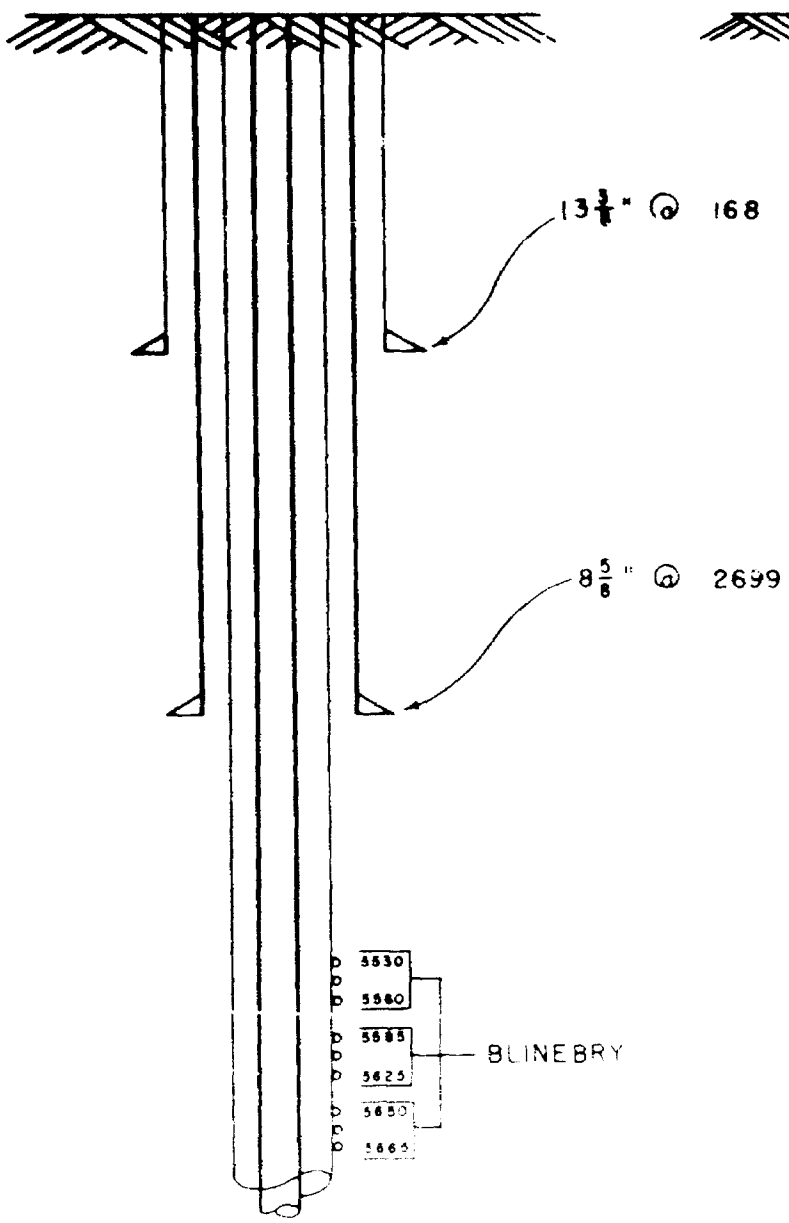

PROPOSED STATUS

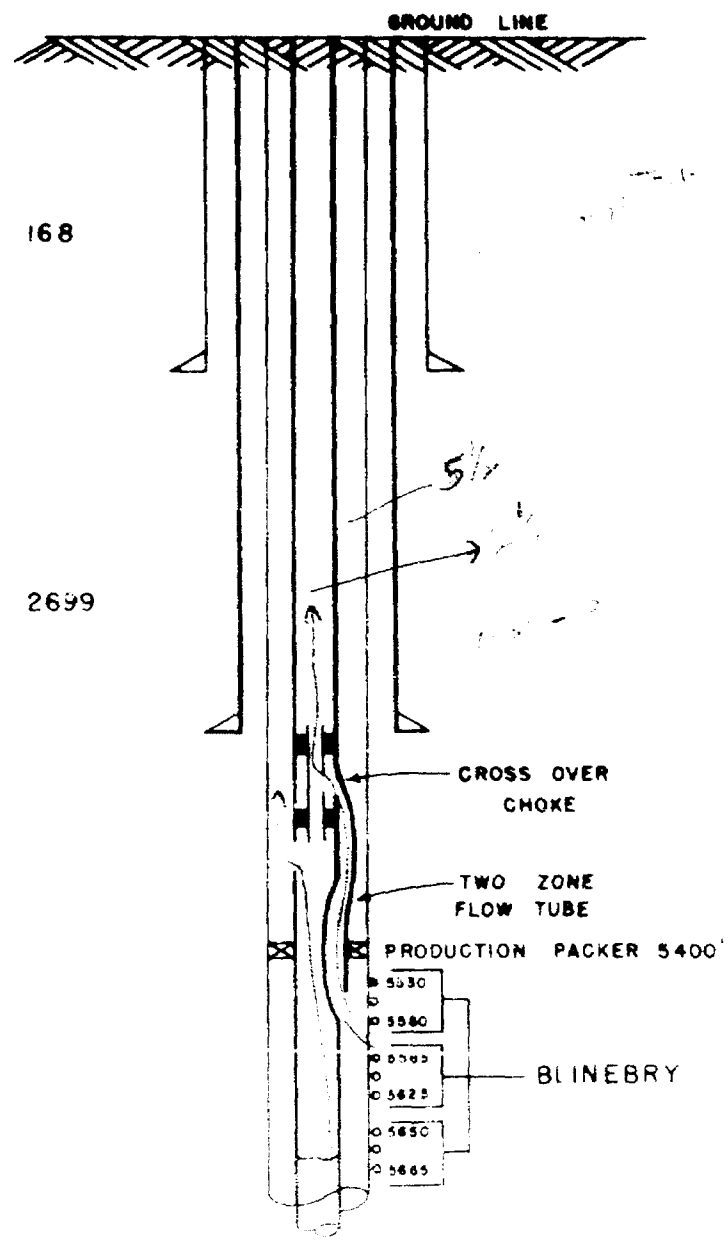

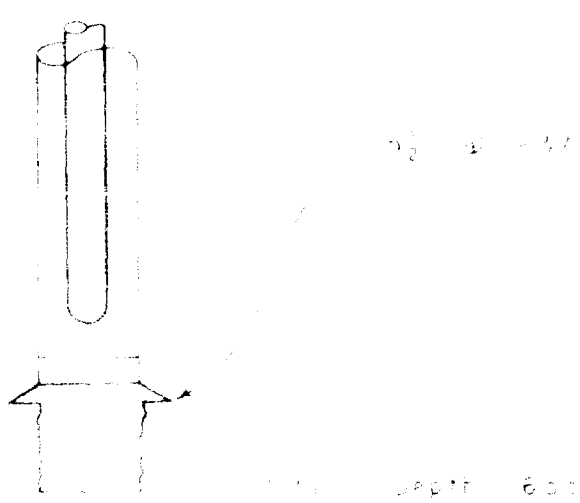

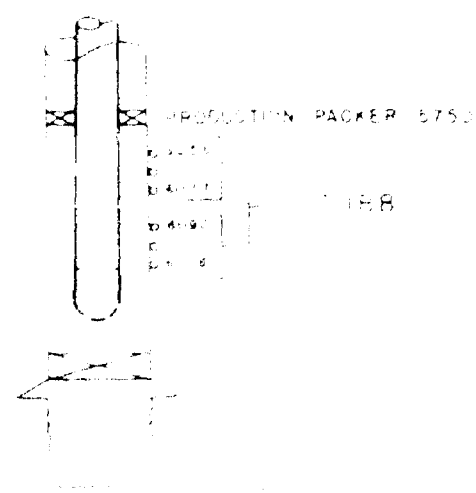

NEVILLE G. PENROSE, INC.

Hinton NW/4 NW/4, Section 13, T22S-R37E

PRESENT STATUS

PROPOSED STATUS

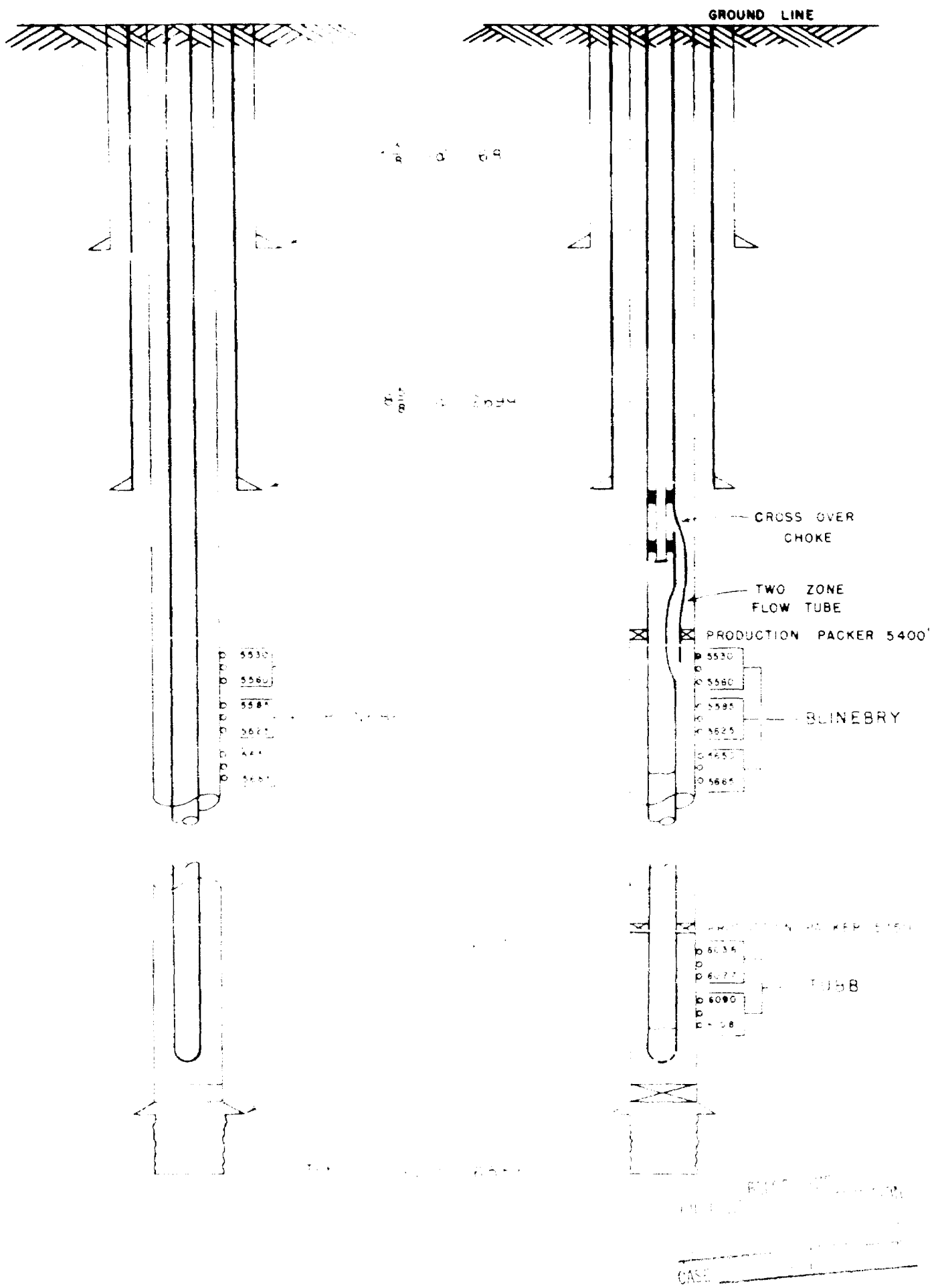

CASE

PROCEDURE

HINTON #10 DUAL COMPLETION

1. Pull tubing and clean out to 6200'.

2. Run Dowell spinner survey to 6200' to check for any possible casing leaks and to accurately locate all perforations.

3. If plug at total depth is found to be leaking, a new bridge plug will be set at 6200'.

4. With salt water in hole perforate opposite Tubb Section @ 6036-6077' and 6090-6108'. Measurements are from Electric Log indicating zero is 8' above ground level.

5. Baker production packer will be set on a wire line @ 5750' and 5400'.

6. Tubing will be re-run with dual zone flow tube in top packer. Choke permitting parallel flow will be installed in flow tube before running tubing.

7. After setting tubing in packers, Tubb zone will be treated and swabbed into production.

8. Choke will be pulled and a cross-over choke re-run.

9. Blinebry section will be treated and swabbed into production through tubing. Tubb will produce through tubing casing annulus.