HARVEY E. YATES COMPANY

Well History Summary Sheet

Operator Harvey E. Yates Co. Well Name & # McDonald #1 Lease # Fee

District Roswell Made By Ray F. Nokes Date 7-28-83

Location P, 660' FSL & 990' FEL, Sec. 33, T-13S, R-36E, Lea County, NM

Spud Date 6-13-81 Compl. Date 3-23-82 TD 14,593' PBTD 12,965'

Type Well: Oil ____ Gas X Other ____ Field McDonald Atoka

I P 3.104 MMCF , BO -0-, BW -0- Zone Atoka

Perfs.: 12,740'-12,782' (4 jspf) Total Holes 168 holes

Stimulation 20,500 gal 7-1/2% MFM

Cumul. Oil ____ MCF ____ Water ____

Recent Test ____ Lift Equipment ____

Misc. Elevation 3966.4' KB 3951' GR

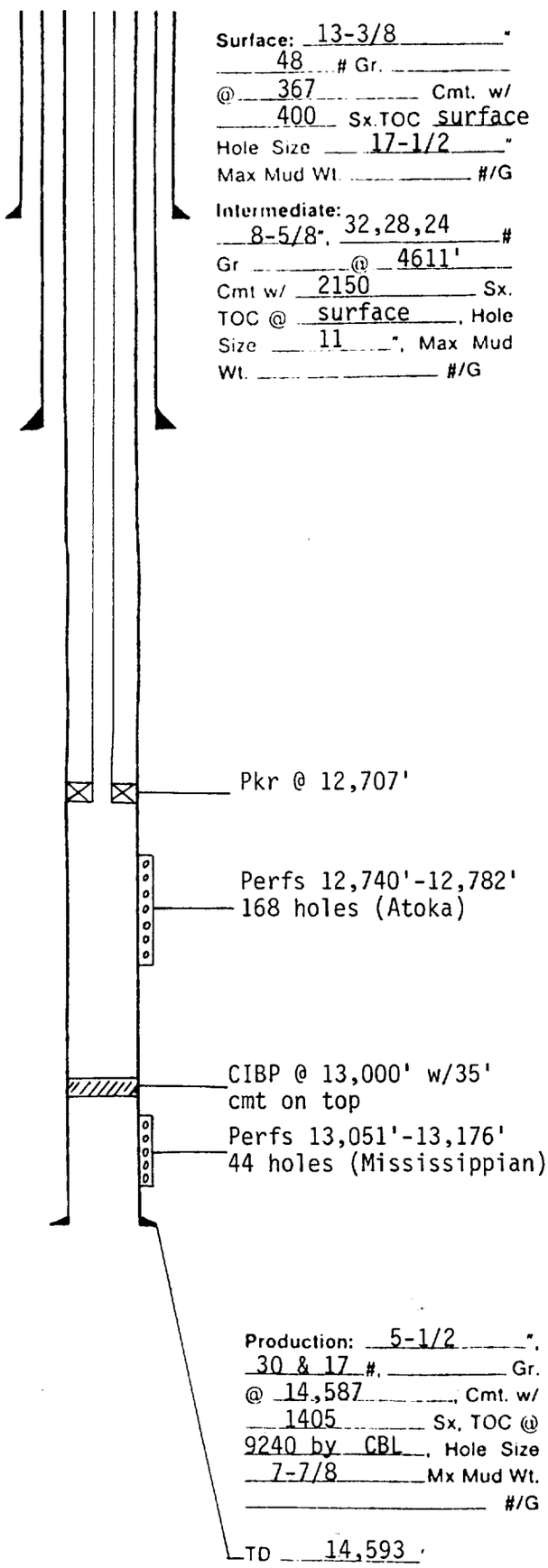

WELL HISTORY

Tubing ____ ", ____ #, ____ Gr. @ ____

Tubing ____ ", ____ #, ____ Gr. @ ____

Packer @ ____