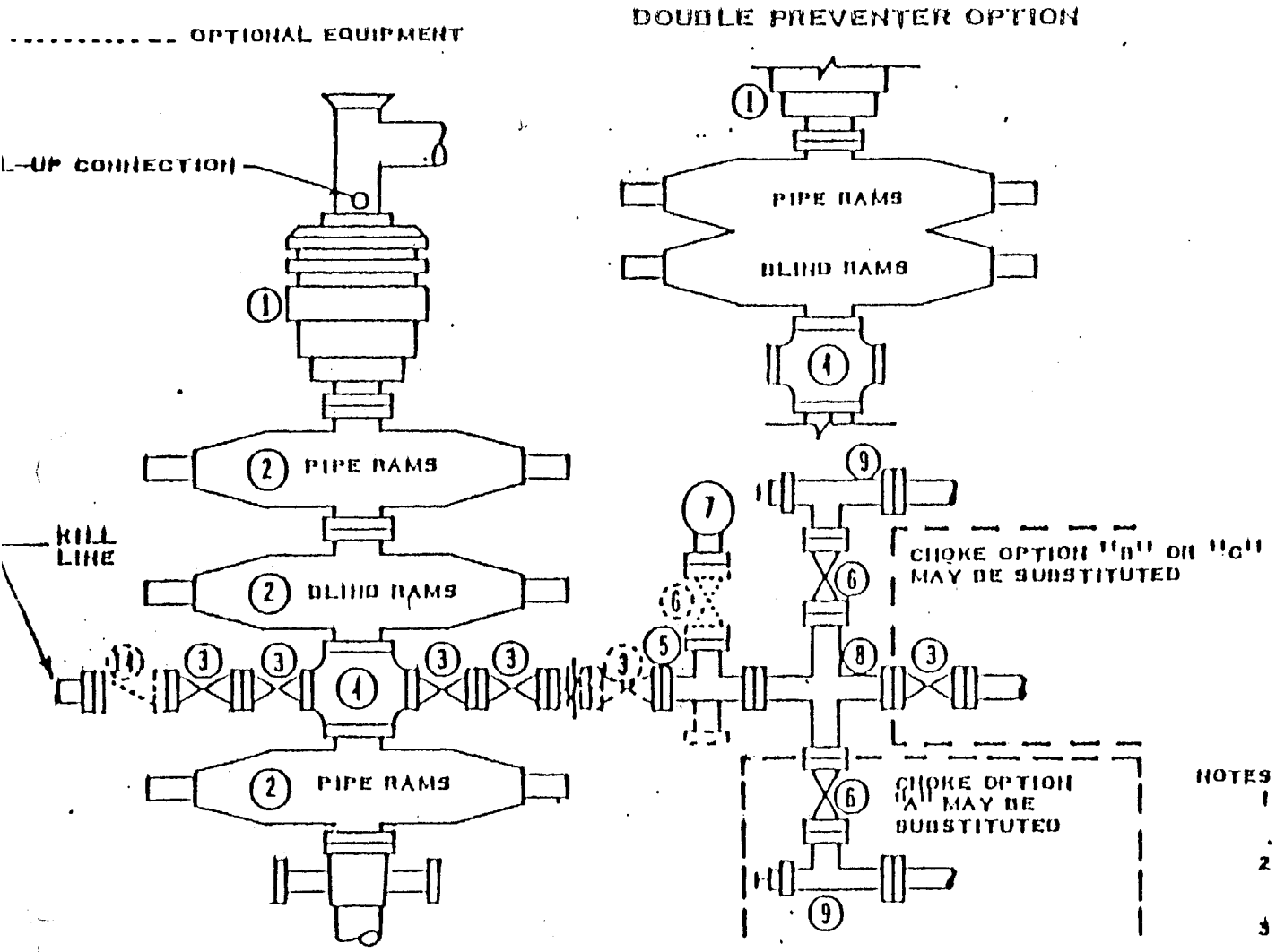

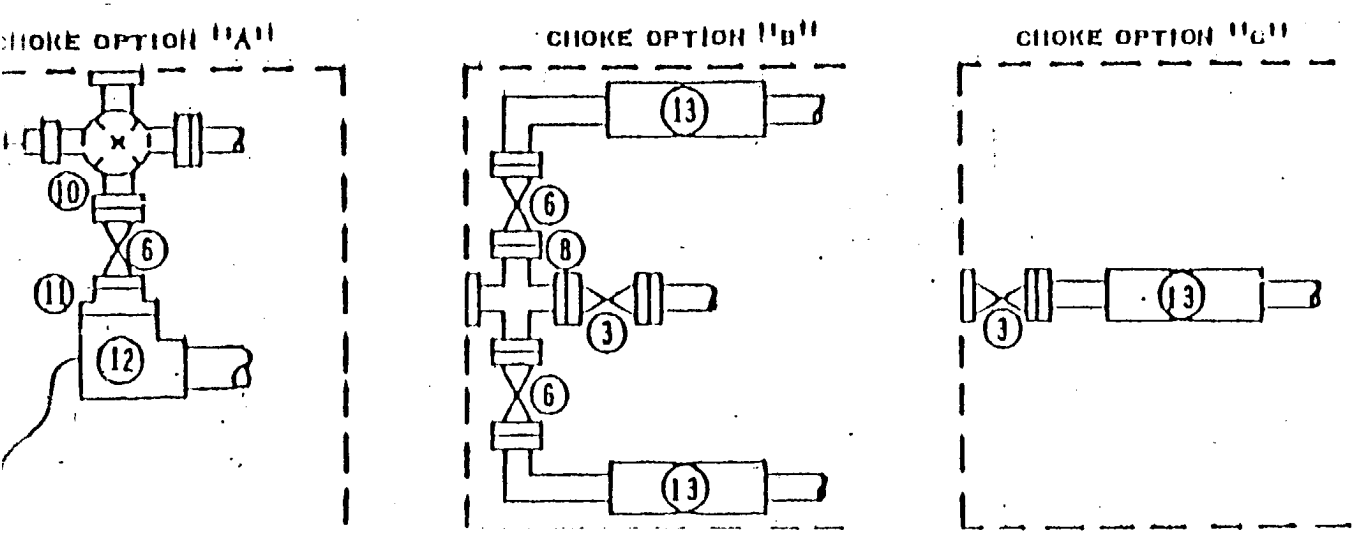

(1) SER. 1500 HYDRIL GK

(2) SER. 1500 RAM-TYPE BOP (8)

(3) 3" SER. 1500 VALVE

(4) SER. 1500 DRILLING SPOOL

(5) 3" SER. 1500 X 2" SER. 1500 STEEL TEE

(6) 2" SER. 1500 VALVE

(7) 2" MUD PRESSURE GUAGE

(8) 3" SER. 1500 X 2" SER. 1500 STEEL CROSS

(9) 2" SER. 1500 ADJ. CHOKE

(10) 2" SER. 1500 ADJ. CHOKE ON 2" SER. 1500 RISER VALVE ON SIDE OUTLET OF 2" SER. 1500 STEEL TEE

(11) ADAPTER, 2" SER. 1500 X 10,000 LB WP FLANGE MATING (12) INLET

(12) 10,000 LB WP REMOTE CHOKE

(13) HYDRAULIC CHOKE, 2500 LB WP OR BETTER

(14) 3" SER. 1500 CHECK VALVE

NOTES

1. 5000 PSI WP OR BETTER CLAMP HUBS MAY BE SUBSTITUTED FOR FLANGES
2. ONE ADJUSTABLE CHOKE MAY BE REPLACED WITH A POSITIVE CHOKE
3. VALVES MAY BE EITHER HAND OR POWER OPERATED BUT, IF POWER OPERATED, THE VALVES FLANGED TO THE BOP RUN MUST BE CAPABLE OF BEING OPENED AND CLOSED MANUALLY OR CLOSE ON POWER FAILURE AND BE CAPABLE OF BEING OPENED MANUALLY

5000 PSI WORKING PRESSURE BLOWOUT PREVENTER HOOK-UP

(SERIES 1500 FLANGES OR BETTER)

RECEIVED
OCT 18 1985
O.C.D.
HOBBS OFFICE