District I
1625 N. French Drive, Hobbs, NM 88240
District II
811 S. First St., Artesia, NM 88210
District III
1000 Rio Brazos Road, Aztec, NM 87410
District IV
1220 S. St Francis Dr, Santa Fe, NM 87505

State of New Mexico
Energy, Minerals and Natural Resources Department

OIL CONSERVATION DIVISION
1220 S. St Francis Drive
Santa Fe, New Mexico 87505

Form C-107-B
Revised August 1, 2011

Submit the original application to the Santa Fe office with one copy to the appropriate District Office.

APPLICATION FOR SURFACE COMMINGLING (DIVERSE OWNERSHIP)

OPERATOR NAME: OXY USA INC
OPERATOR ADDRESS: PO BOX 4294 HOUSTON, TX 77210
APPLICATION TYPE:

☐ Pool Commingling ☐ Lease Commingling ☒ Pool and Lease Commingling ☐ Off-Lease Storage and Measurement (Only if not Surface Commingled)

LEASE TYPE: ☒ Fee ☐ State ☒ Federal

Is this an Amendment to existing Order? ☒ Yes ☐ No If "Yes", please include the appropriate Order No. PLC-898C
Have the Bureau of Land Management (BLM) and State Land office (SLO) been notified in writing of the proposed commingling
☒ Yes ☐ No

(A) POOL COMMINGLING
Please attach sheets with the following information

(1) Pool Names and Codes	Gravities / BTU of Non-Commingled Production	Calculated Gravities / BTU of Commingled Production		Calculated Value of Commingled Production	Volumes
SEE ATTACHED					

(2) Are any wells producing at top allowables? ☐ Yes ☒ No
(3) Has all interest owners been notified by certified mail of the proposed commingling? ☒ Yes ☐ No.
(4) Measurement type: ☐ Metering ☒ Other (Specify) : ALLOCATION BY WELL TEST
(5) Will commingling decrease the value of production? ☐ Yes ☒ No If "yes", describe why commingling should be approved

(B) LEASE COMMINGLING
Please attach sheets with the following information

(1) Pool Name and Code.
(2) Is all production from same source of supply? ☐ Yes ☐ No
(3) Has all interest owners been notified by certified mail of the proposed commingling? ☐ Yes ☐ No
(4) Measurement type: ☐ Metering ☐ Other (Specify)

(C) POOL and LEASE COMMINGLING
Please attach sheets with the following information

(1) Complete Sections A and E.

(D) OFF-LEASE STORAGE and MEASUREMENT
Please attached sheets with the following information

(1) Is all production from same source of supply? ☐ Yes ☐ No
(2) Include proof of notice to all interest owners.

(E) ADDITIONAL INFORMATION (for all application types)
Please attach sheets with the following information

(1) A schematic diagram of facility, including legal location.
(2) A plat with lease boundaries showing all well and facility locations. Include lease numbers if Federal or State lands are involved.
(3) Lease Names, Lease and Well Numbers, and API Numbers.

I hereby certify that the information above is true and complete to the best of my knowledge and belief.

SIGNATURE:_____ TITLE:_REGULATORY ENGINEER__ DATE:__10/30/2025

TYPE OR PRINT NAME___SANDRA MUSALLAM_____ TELEPHONE NO.:___713-366-5106_____

E-MAIL ADDRESS:___SANDRA_MUSALLAM@OXY.COM_____

Revised March 23, 2017

RECEIVED:	REVIEWER:	TYPE:	APP NO:

ABOVE THIS TABLE FOR OCD DIVISION USE ONLY

NEW MEXICO OIL CONSERVATION DIVISION
- Geological & Engineering Bureau –
1220 South St. Francis Drive, Santa Fe, NM 87505

ADMINISTRATIVE APPLICATION CHECKLIST

THIS CHECKLIST IS MANDATORY FOR ALL ADMINISTRATIVE APPLICATIONS FOR EXCEPTIONS TO DIVISION RULES AND REGULATIONS WHICH REQUIRE PROCESSING AT THE DIVISION LEVEL IN SANTA FE

Applicant: OXY USA INC. **OGRID Number:** 16696
Well Name: CHUCK SMITH MDP1 8_17 FED COM 2H & MULTIPLE **API:** 30-015-54049 & MULTIPLE
Pool: PURPLE SAGE;WOLFCAMP (GAS) & MULTIPLE **Pool Code:** 98220 & MULTIPLE

SUBMIT ACCURATE AND COMPLETE INFORMATION REQUIRED TO PROCESS THE TYPE OF APPLICATION INDICATED BELOW

1) **TYPE OF APPLICATION:** Check those which apply for [A]
A. Location – Spacing Unit – Simultaneous Dedication
☐ NSL ☐ NSP (PROJECT AREA) ☐ NSP (PRORATION UNIT) ☐ SD

B. Check one only for [I] or [II]
[I] Commingling – Storage – Measurement
☐ DHC ☐ CTB ☒ PLC ☐ PC ☐ OLS ☐ OLM
AMENDMENT TO PLC 898C
[II] Injection – Disposal – Pressure Increase – Enhanced Oil Recovery
☐ WFX ☐ PMX ☐ SWD ☐ IPI ☐ EOR ☐ PPR

FOR OCD ONLY
☐ Notice Complete
☐ Application Content Complete

2) **NOTIFICATION REQUIRED TO:** Check those which apply.
A. ☐ Offset operators or lease holders
B. ☒ Royalty, overriding royalty owners, revenue owners
C. ☐ Application requires published notice
D. ☐ Notification and/or concurrent approval by SLO
E. ☒ Notification and/or concurrent approval by BLM
F. ☐ Surface owner
G. ☒ For all of the above, proof of notification or publication is attached, and/or,
H. ☐ No notice required

3) **CERTIFICATION:** I hereby certify that the information submitted with this application for administrative approval is **accurate** and **complete** to the best of my knowledge. I also understand that **no action** will be taken on this application until the required information and notifications are submitted to the Division.

Note: Statement must be completed by an individual with managerial and/or supervisory capacity.

SANDRA MUSALLAM
Print or Type Name

10/30/2025
Date

713-366-5106
Phone Number

Signature

SANDRA_MUSALLAM@OXY.COM
e-mail Address

APPLICATION FOR POOL AND LEASE COMMINGLE, OFF-LEASE MEASUREMENT, SALES AND STORAGE
Commingling proposal for oil production at Sand Dunes South Corridor Facility Train 1

OXY USA INC requests to amend PLC 898C for oil production at the Sand Dunes South Corridor Facility (B 18 T24S R31E) Train 1. The wells to be added to Train 1 and also existing wells at Train 1 are listed below. This commingling proposal will supersede PLC 552B which is the current commingle order for the wells to be added to Train 1.

This commingle permit request includes the existing and future wells of the leases/CAs and pools listed below.

Wells to add to Train 1
POOL : COTTON DRAW; BONE SPRING (13367)

LEASE NUMBER	WELL NAME	API	SURFACE LOCATION	DATE ONLINE	OIL (BPD)	GRAVITY API	GAS (MSCFD)	BTU/CF	WATER (BPD)
CA NMNM139920 NMNM97133 NMNM82896 FEE	NIMITZ MDP1 12 FEDERAL COM 6H	30-015-44528	P-12-24S-30E	Aug-2018	31	45.2	377	1269	228
CA NMNM139920 NMNM97133 NMNM82896 FEE	NIMITZ MDP1 12 FEDERAL COM 7H	30-015-44529	P-12-24S-30E	Aug-2018	65	45.2	478	1250	335
CA NMNM137687 NMNM82904 NMNM57273 FEE	PALLADIUM MDP1 7-6 FEDERAL COM 5H	30-015-44294	P-07-24S-31E	Nov-2017	29	45.2	191	1268	134

POOL : PURPLE SAGE; WOLFCAMP (98220)

LEASE NUMBER	WELL NAME	API	SURFACE LOCATION	DATE ONLINE	OIL (BPD)	GRAVITY API	GAS (MSCFD)	BTU/CF	WATER (BPD)
CA NMNM105777379 NMNM89819 NMNM57273 FEE	JEFF SMITH MDP1 7_18 FED COM 174H	30-015-47241	N-06-24S-31E	Aug-2022	79	45.2	348	1242	432

Existing wells at Train 1
POOL : COTTON DRAW; BONE SPRING (13367)

LEASE NUMBER	WELL NAME	API	SURFACE LOCATION	DATE ONLINE	OIL (BPD)	GRAVITY API	GAS (MSCFD)	BTU/CF	WATER (BPD)
CA NMNM 138992 NMNM82896 NMNM97133	NIMITZ MDP1 12 FEDERAL 1H	30-015-44526	M-12-24S-30E	Jun-2018	145	46.8	207	1245	304
CA NMNM 138992 NMNM82896 NMNM97133	NIMITZ MDP1 12 FEDERAL 2H	30-015-44580	C-13-24S-30E	Jun-2018	53	46.8	136	1252	185
CA NMNM 138995 NMNM82896 NMNM97133	NIMITZ MDP1 12 FEDERAL 9H	30-015-44581	C-13-24S-30E	Jun-2018	99	46.8	336	1249	254
CA NMNM 138996 NMNM82896 NMNM120897	NIMITZ MDP1 13 FEDERAL COM 2H	30-015-44498	P-12-24S-30E	Aug-18	28	46.8	93	1242	111
CA NMNM 138997 NMNM82896 NMNM136214	NIMITZ MDP1 13 FEDERAL COM 3H	30-015-44525	M-07-24S-31E	Aug-18	35	46.8	217	1272	140
CA NMNM137968 NMNM82904 NMNM57273	PALLADIUM MDP1 7-6 FEDERAL COM 1H	30-015-44298	M-07-24S-31E	Feb-18	36	46.8	215	1270	186
CA NMNM137968 NMNM82904 NMNM57273	PALLADIUM MDP1 7-6 FEDERAL COM 2H	30-015-44299	C-18-24S-31E	Feb-18	41	46.8	295	1268	242
CA NMNM137685 NMNM82904 NMNM57273	PALLADIUM MDP1 7-6 FEDERAL COM 3Y	30-015-44457	C-18-24S-31E	Dec-17	33	46.8	460	1292	184
CA NMNM137601 NMNM82904 NMNM57273	PALLADIUM MDP1 7-6 FEDERAL COM 6H	30-015-44293	M-08-24S-31E	Nov-17	38	46.8	336	1277	224
NMNM89172	PATTON MDP1 17 FEDERAL 1H	30-015-44459	N-08-24S-31E	Apr-2018	13	46.8	213	1267	64
NMNM89172	PATTON MDP1 17 FEDERAL 2H	30-015-44460	N-08-24S-31E	Apr-2018	28	46.8	131	1250	81
NMNM89172	PATTON MDP1 17 FEDERAL 3H	30-015-44496	N-08-24S-31E	Apr-2018	49	46.8	219	1263	131
NMNM89172	PATTON MDP1 17 FEDERAL 4H	30-015-44497	O-08-24S-31E	Apr-2018	27	46.8	105	1259	74
NMNM89172	PATTON MDP1 17 FEDERAL 5H	30-015-44444	P-08-24S-31E	Mar-2018	2	46.8	0	1288	0
NMNM89172	PATTON MDP1 17 FEDERAL 6H	30-015-44445	B-18-24S-31E	Mar-2018	43	46.8	115	1293	152
NMNM89172	PATTON MDP1 17 FEDERAL 176H	30-015-45079	A-17-24S-31E	Nov-2018	20	46.8	367	1161	28
NMNM89819	PATTON MDP1 18 FED 23H	30-015-44316	B-18-24S-31E	Dec-2017	17	46.8	96	1296	45
NMNM89819	PATTON MDP1 18 FED 33H	30-015-44338	B-18-24S-31E	Dec-2017	11	46.8	507	1295	27
NMNM89819	PATTON MDP1 18 FED 73H	30-015-44318	M-07-24S-31E	Dec-2017	35	46.8	82	1272	207
NMNM89819	PATTON MDP1 18 FEDERAL 1H	30-015-44317	C-18-24S-31E	Feb-2018	24	46.8	191	1247	101

LEASE NUMBER	WELL NAME	API	SURFACE LOCATION	DATE ONLINE	OIL (BPD)	GRAVITY API	GAS (MSCFD)	BTU/CF	WATER (BPD)
NMNM89819	PATTON MDP1 18 FEDERAL 2H	30-015-44337	C-18-24S-31E	Dec-2017	32	46.8	173	1282	148
NMNM89819	PATTON MDP1 18 FEDERAL 3H	30-015-44333	A-18-24S-31E	Dec-2017	15	46.8	350	1254	43
NMNM89819	PATTON MDP1 18 FEDERAL 5H	30-015-44272	A-18-24S-31E	Dec-2017	29	46.8	171	1255	71
NMNM89819	PATTON MDP1 18 FEDERAL 7H	30-015-44273	M-18-24S-31E	Dec-2017	19	46.8	138	1287	67
CA NMNM138291 NMNM104730 NMNM82904 NMNM142143 (former NMNM29234) NMNM142692 (former NMNM63757)	SUNRISE MDP1 8-5 FEDERAL COM 1H	30-015-44369	M-08-24S-31E	Mar-2018	28	46.8	234	1279	94
CA NMNM138291 NMNM104730 NMNM82904 NMNM142143 (former NMNM29234) NMNM142692 (former NMNM63757)	SUNRISE MDP1 8-5 FEDERAL COM 2H	30-015-44395	N-08-24S-31E	Mar-2018	46	46.8	244	1269	115
CA NMNM138294 NMNM142143 (former NMNM29234) NMNM104730	SUNRISE MDP1 8-5 FEDERAL COM 3H	30-015-44474	N-08-24S-31E	Apr-2018	57	46.8	307	1264	135
CA NMNM138295 NMNM142696 (former NMNM31963) NMNM104730	SUNRISE MDP1 8-5 FEDERAL COM 4H	30-015-44475	N-08-24S-31E	Apr-2018	53	46.8	260	1282	125
CA NMNM138296 NMNM142696 (former NMNM31963) NMNM104730	SUNRISE MDP1 8-5 FEDERAL COM 5H	30-015-44476	N-08-24S-31E	Mar-2018	52	46.8	298	1267	190
CA NMNM138296 NMNM142696 (former NMNM31963) NMNM104730	SUNRISE MDP1 8-5 FEDERAL COM 6H	30-015-44473	N-08-24S-31E	Mar-2018	58	46.8	1025	1288	195
CA NMNM106385694 NMNM089172 NMNM142696	CHUCK SMITH MDP1 8 17 FED COM 4H	30-015-54092	B-08-24S-31E	Feb-2024	154	46.8	957	1253	368
CA NMNM106385694 NMNM089172 NMNM142696	CHUCK SMITH MDP1 8 17 FED COM 5H	30-015-54050	B-08-24S-31E	Feb-2024	236	46.8	1534	1266	483
CA NMNM106385694 NMNM089172 NMNM142696	CHUCK SMITH MDP1 8 17 FED COM 44H	30-015-54091	O-05-24S-31E	TBD	Est. 797	46.8	Est. 1884	Est. 1270	Est. 1416
CA NMNM106385693 NMNM089172 NMNM142692 NMNM142143	CHUCK SMITH MDP1 8 17 FED COM 21H	30-015-54093	M-05-24S-31E	Feb-2024	132	46.8	1232	1276	144
CA NMNM106385693 NMNM089172 NMNM142692 NMNM142143	CHUCK SMITH MDP1 8 17 FED COM 22H	30-015-54097	N-08-24S-31E	Feb-2024	135	46.8	1270	1281	189
CA NMNM106385693 NMNM089172 NMNM142692 NMNM142143	CHUCK SMITH MDP1 8 17 FED COM 23H	30-015-54260	N-05-24S-31E	Feb-2024	134	46.8	1150	1261	118

LEASE NUMBER	WELL NAME	API	SURFACE LOCATION	DATE ONLINE	OIL (BPD)	GRAVITY API	GAS (MSCFD)	BTU/CF	WATER (BPD)
CA NMNM106737144 NMNM082904 NMNM0544986B NMNM0546732A	NUGGET 6_31 FED COM 07H	30-015-56037	P-06-24S-31E	Aug-2025	215	46.8	392	1297	3027
CA NMNM106737144 NMNM082904 NMNM0544986B NMNM0546732A	NUGGET 6_31 FED COM 13H	30-015-56038	P-06-24S-31E	Aug-2025	714	46.8	1331	1257	4217
CA NMNM106737144 NMNM082904 NMNM0544986B NMNM0546732A	NUGGET 6_31 FED COM 14H	30-015-56039	P-06-24S-31E	Aug-2025	322	46.8	847	1263	3989
CA NMNM106737142 NMNM082904 NMNM0546732A	NUGGET 6_31 FED COM 11H	30-015-55865	C-07-24S-31E	Aug-2025	278	46.8	496	1234	2615
CA NMNM106737142 NMNM082904 NMNM0546732A	NUGGET 6_31 FED COM 12H	30-015-56047	C-07-24S-31E	Aug-2025	624	46.8	965	1274	3842
CA NMNM137686 NMNM82904 NMNM57273 FEE	PALLADIUM MDP1 7-6 FEDERAL COM 4H	30-015-44295	P-07-24S-31E	Dec-2017	18	46.8	294	1250	163

POOL : PURPLE SAGE; WOLFCAMP (98220)

LEASE NUMBER	WELL NAME	API	SURFACE LOCATION	DATE ONLINE	OIL (BPD)	GRAVITY API	GAS (MSCFD)	BTU/CF	WATER (BPD)
NMNM89819	PATTON MDP1 18 FEDERAL 6H	30-015-43854	A-18-24S-31E	Nov-2016	27	46.8	267	1294	131
NMNM89172	PATTON MDP1 17 FEDERAL 171H	30-015-44989	C-17-24S-31E	Nov-2018	26	46.8	99	1255	170
NMNM89172	PATTON MDP1 17 FEDERAL 172H	30-015-44990	C-17-24S-31E	Nov-2018	41	46.8	49	1289	249
NMNM89172	PATTON MDP1 17 FEDERAL 173H	30-015-44991	C-17-24S-31E	Nov-2018	28	46.8	55	1278	178
NMNM89172	PATTON MDP1 17 FEDERAL 174H	30-015-45077	B-17-24S-31E	Nov-2018	34	46.8	83	1283	211
NMNM89172	PATTON MDP1 17 FEDERAL 175H	30-015-45078	B-17-24S-31E	Nov-2018	38	46.8	137	1278	208
CA NMNM105766133 NMNM104730 NMNM82904 NMNM142143 NMNM142692 (former NMNM63757)	SUNRISE MDP1 8-5 Fed 171H	30-015-44930	C-17-24S-31E	Jun-2019	66	46.8	268	1297	463
CA NMNM105766133 NMNM104730 NMNM82904 NMNM142143 NMNM142692 (former NMNM63757)	SUNRISE MDP1 8-5 Fed 172H	30-015-44977	C-17-24S-31E	Jun-2019	70	46.8	263	1296	324
CA NMNM105766133 NMNM104730 NMNM82904 NMNM142143 NMNM142692 (former NMNM63757)	SUNRISE MDP1 8-5 Fed 173H	30-015-44931	C-17-24S-31E	Jun-2019	63	46.8	154	1291	225

LEASE NUMBER	WELL NAME	API	SURFACE LOCATION	DATE ONLINE	OIL (BPD)	GRAVITY API	GAS (MSCFD)	BTU/CF	WATER (BPD)
CA NMNM105766134 NMNM142696 (former NMNM31963) NMNM104730	SUNRISE MDP1 8-5 Fed 174H	30-015-45112	B-17-24S-31E	Sep-2019	58	46.8	309	1283	389
CA NMNM105766134 NMNM142696 (former NMNM31963) NMNM104730	SUNRISE MDP1 8-5 Fed 175H	30-015-45152	B-17-24S-31E	Sep-2019	58	46.8	169	1290	176
CA NMNM105766134 NMNM142696 (former NMNM31963) NMNM104730	SUNRISE MDP1 8-5 Fed 176H	30-015-45153	A-17-24S-31E	Sep-2019	99	46.8	198	1291	405
CA NMNM105777378 NMNM57273 NMNM89819	JEFF SMITH MDP1 7_18 FED COM 171H	30-015-47258	M-06-24S-31E	Jun-2022	120	46.8	596	1265	446
CA NMNM105777378 NMNM57273 NMNM89819	JEFF SMITH MDP1 7_18 FED COM 172H	30-015-47249	M-06-24S-31E	Jul-2022	141	46.8	311	1280	701
CA NMNM105777378 NMNM57273 NMNM89819	JEFF SMITH MDP1 7_18 FED COM 173H	30-015-47247	N-06-24S-31E	Aug-2022	140	46.8	562	1272	478
CA NMNM106359462 NMNM097133 NMNM082896 NMNM120897	NIMITZ MDP1 13_1 FED COM 1H	30-015-48588	O-13-24S-30E	Aug-2023	181	46.8	759	1273	721
CA NMNM106359462 NMNM097133 NMNM082896 NMNM120897	NIMITZ MDP1 13_1 FED COM 172H	30-015-48613	M-13-24S-30E	Aug-2023	177	46.8	538	1251	648
CA NMNM106359462 NMNM097133 NMNM082896 NMNM120897	NIMITZ MDP1 13_1 FED COM 173H	30-015-48589	O-13-24S-30E	Aug-2023	206	46.8	598	1252	1076
CA NMNM106359462 NMNM097133 NMNM082896 NMNM120897	NIMITZ MDP1 13_1 FED COM 312H	30-015-48590	O-13-24S-30E	Aug-2023	189	46.8	537	1257	977
CA NMNM106359460 NMNM120897 NMNM082896 NMNM097133	NIMITZ MDP1 13_1 FED COM 171H	30-015-48578	M-13-24S-30E	Aug-2023	185	46.8	584	1284	793
CA NMNM106359460 NMNM120897 NMNM082896 NMNM097133	NIMITZ MDP1 13_1 FED COM 311H	30-015-48586	M-13-24S-30E	Aug-2023	245	46.8	656	1267	1297

LEASE NUMBER	WELL NAME	API	SURFACE LOCATION	DATE ONLINE	OIL (BPD)	GRAVITY API	GAS (MSCFD)	BTU/CF	WATER (BPD)
CA NMNM106744570 NMNM089172 NMNM142692 NMNM142143	CHUCK SMITH MDP1 8 17 FED COM 1H	30-015-54261	C-8-24S-31E	May-2025	588	46.8	3273	1245	2465
CA NMNM106744570 NMNM089172 NMNM142692 NMNM142143	CHUCK SMITH MDP1 8 17 FED COM 2H	30-015-54049	C-8-24S-31E	May-2025	560	46.8	3473	1234	2586
CA NMNM106744570 NMNM089172 NMNM142692 NMNM142143	CHUCK SMITH MDP1 8 17 FED COM 31H	30-015-55468	M-5-24S-31E	May-2025	640	46.8	3274	1256	2732
CA NMNM106744570 NMNM089172 NMNM142692 NMNM142143	CHUCK SMITH MDP1 8 17 FED COM 32H	30-015-55469	M-5-24S-31E	May-2025	601	46.8	3462	1250	2652
CA NMNM106392073 PENDING NMNM089172 NMNM142696	CHUCK SMITH MDP1 8 17 FED COM 3H	30-015-54096	C-8-24S-31E	May-2025	518	46.8	3619	1266	2885
CA NMNM106392073 PENDING NMNM089172 NMNM142696	CHUCK SMITH MDP1 8 17 FED COM 24H	30-015-54047	O-05-24S-31E	Feb-2024	88	46.8	1262	1279	1149
CA NMNM106392073 PENDING NMNM089172 NMNM142696	CHUCK SMITH MDP1 8 17 FED COM 25H	30-015-54094	O-05-24S-31E	Feb-2024	207	46.8	2072	1256	1634
CA NMNM106392073 PENDING NMNM089172 NMNM142696	CHUCK SMITH MDP1 8 17 FED COM 26H	30-015-54095	O-05-24S-31E	Feb-2024	202	46.8	2100	1258	970
CA NMNM106359464 NMNM97133 NMNM82896 NMNNM136214 FEE	NIMITZ MDP1 13_1 FEDERAL COM 175H	30-015-53777	P-13-24S-30E	Nov-2023	269	46.8	1083	1283	1370
CA NMNM106359464 NMNM97133 NMNM82896 NMNNM136214 FEE	NIMITZ MDP1 13_1 FEDERAL COM 313H	30-015-53778	P-13-24S-30E	Nov-2023	243	46.8	888	1280	1166

POOL: POKER LAKE; DELAWARE, NORTHWEST (96046)

LEASE NUMBER	WELL NAME	API	SURFACE LOCATION	DATE ONLINE	OIL (BPD)	GRAVITY API	GAS (MSCFD)	BTU/CF	WATER (BPD)
NMNM82896	GILA 12 FEDERAL 2H	30-015-36401	O-12-24S-30E	Dec-2008	0	42.7	17	1281	0
NMNM82896	NIMITZ 12 FEDERAL 3H	30-015-41011	B-12-24S-30E	Jul-2013	0	42.7	35	1292	0
NMNM82896	NIMITZ 12 FEDERAL 4H	30-015-41506	N-12-24S-30E	Sep-2014	0	42.7	20	1292	0
NMNM82896	NIMITZ 12 FEDERAL 5H	30-015-41657	M-12-24S-30E	Aug-2014	0	42.7	13	1292	0

Process Description:

Sand Dunes Battery Train 1 has two 10' X 40' and one 6' X 20' three-phase production separators with turbine meters for oil and water and orifice meters for gas.

After separation, the oil stream flows through heater treaters, vertical recovery towers and LACT units. The aforementioned LACT units serve as the oil FMPs. The existing tanks will remain onsite and are incorporated into the design as emergency backup storage in the event of system upsets and power outages.

Oil production is allocated back to each well from the train's oil LACT (FMP) based on well test. For testing purposes, Train 1 is equipped with nine 6' x 20' three-phase test separators. Each test vessel is equipped with an oil turbine meter, gas orifice meter and water turbine meter.

Wells are tested daily prior to Range 1 of decline and are tested at least three times per month during Range 1 of decline. When Range 2 decline is started, the wells are tested at least twice per month. Wells are tested at least once per month when Range 3 of decline is started. The Nugget wells are in Range 1 of decline, and the Chuck Smith MDP1 8_17 Fed Com 1H, 2H, 31H, 32H, and 3H are in Range 2 of decline. All other wells are in Range 3 of decline.

The gas orifice meters on each production and test separator continuously measure and serve as the BLM gas FMPs. Gas is combined after being measured at the gas FMPs and flows through a gas scrubber then is sent to sales. Gas production is allocated back to each well based on the aforementioned well tests. Gas commingling downstream of the aforementioned facility gas FMP meters is handled through PLC 749H.

All water generated at the facility is sent to the Sand Dunes SWD Integration System.

Additional Application Components:

The flow of production is shown in detail in the enclosed facility diagram. Also enclosed is a map detailing the lease boundaries, well and battery locations.

The oil and gas meters will be calibrated on a regular basis per API, NMOCD and BLM specifications.

Pursuant to Statewide rule 19.15.12.10(C)(4)(g) OXY USA INC requests the option to include additional pools or leases within the defined parameters set forth in the Order for future additions.

Commingling will not reduce the individual wells' production value or otherwise adversely affect the interest owners. It is the most effective means of producing the reserves.

The surface commingle application will be submitted separately for approval per NMOCD and BLM regulations.

OXY USA INC understands the requested approval will not constitute the granting of any right-of-way or construction rights not granted by the lease instrument.

SAND DUNES SOUTH CORRIDOR FACILITY

EDDY COUNTY, NM

Project: NAD27
Scale: 1:21,000
Last Update: 2/14/2025
Author: vym

Disclaimer - These illustration(s), aerial photo(s), all notations and depictions thereon, and any related information ("data") are the confidential property of Occidental Petroleum Corporation and/or its affiliates and may not be reproduced, used, or distributed without prior written permission. THE DATA IS PROVIDED AS A COURTESY AND IS INTENDED TO BE USED FOR GENERAL INFORMATIONAL PURPOSES ONLY. OCCIDENTAL PETROLEUM CORPORATION MAKES NO REPRESENTATIONS REGARDING THE DATA AND DISCLAIMS ANY AND ALL IMPLIED AND EXPRESS WARRANTIES REGARDING THE ACCURACY, COMPLETENESS, SUITABILITY, OR FITNESS FOR A PARTICULAR PURPOSE OF THE DATA. ANYONE VIEWING THE DATA SHOULD INDEPENDENTLY VERIFY IT PRIOR TO TAKING ANY ACTION. ANY RELIANCE ON THE DATA FOR ANY PURPOSE WHATSOEVER IS AT THE SOLE RISK OF THE PARTY SO RELYING.

CA NMNM106737144 - BS
NUGGET 6 31 FEDERAL COM #07H
NUGGET 6 31 FEDERAL COM #13H
NUGGET 6 31 FEDERAL COM #14H

CA NMNM106737142 - BS
NUGGET 6 31 FEDERAL COM #11
NUGGET 6 31 FEDERAL COM #12H

CA NMNM106359464 - WC
NIMITZ MDP1 13 FED COM 175H
NIMITZ MDP1 13 FED COM 313H

CA NMNM137686 - BS
PALLADIUM MDP1
7_6 FED COM 4H

CA NMNM137687 BS
PALLADIUM MDP1
7-6 FED COM 5H

CA NMNM105766133 - WC
SUNRISE MDP1 8-5 FED COM 171H
SUNRISE MDP1 8-5 FED COM 172H
SUNRISE MDP1 8-5 FED COM 173H

CA NMNM105766134 - WC
SUNRISE MDP1 8-5 FED COM 174H
SUNRISE MDP1 8-5 FED COM 175H
SUNRISE MDP1 8-5 FED COM 176H

CA NMNM139920 - BS
NIMITZ MDP1 12 FED COM 6H
NIMITZ MDP1 12 FED COM 7H

CA NMNM 138992 BS
CA NMNM 138995 BS
CA NMNM 137986 BS
CA NMNM 137685 BS
CA NMNM 138291 BS
CA NMNM 138294 BS
CA NMNM 138295 BS
CA NMNM 138296 BS
CA NMNM 137601 BS
CA NMNM 138996 BS
CA NMNM 138997 BS

CA NMNM106359460 - WC
NIMITZ MDP1 13_1 FED COM 171H, 311H

CA NMNM106359462 - WC
NIMITZ MDP1 13_1 FED COM 1H, 172H, 173H, 312H

PATTON MDP1 17 FED 1H
PATTON MDP1 17 FED 2H
PATTON MDP1 17 FED 3H
PATTON MDP1 17 FED 4H
PATTON MDP1 17 FED 5H
PATTON MDP1 17 FED 6H
PATTON MDP1 18 FED 23H
PATTON MDP1 18 FED 33H
PATTON MDP1 18 FED 73H
PATTON MDP1 18 FED 1H
PATTON MDP1 18 FED 2H
PATTON MDP1 18 FED 3H
PATTON MDP1 18 FED 5H
PATTON MDP1 18 FED 7H
PATTON MDP1 18 FED 6H
PATTON MDP1 17 FED 171H
PATTON MDP1 17 FED 172H
PATTON MDP1 17 FED 173H
PATTON MDP1 17 FED 174H
PATTON MDP1 17 FED 175H
PATTON MDP1 17 FED 176H

CA NM138992
NIMITZ MDP1 12 FED 1H
NIMITZ MDP1 12 FED 2H
CA NM138995
NIMITZ MDP1 12 FED 9H
CA NM138996
NIMITZ MDP1 13 FED 2H
CA NM138997
NIMITZ MDP1 13 FED 3H
CA NM137968
PALLADIUM MDP1 7-6 FED COM 1H
PALLADIUM MDP1 7-6 FED COM 2H
CA NM137685
PALLADIUM MDP1 7-6 FED COM 3Y
CA NM137601
PALLADIUM MDP1 7-6 FED COM 6H
CA NM138291
SUNRISE MDP1 8-5 FED COM 1H
SUNRISE MDP1 8-5 FED COM 2H
CA NM138294
SUNRISE MDP1 8-5 FED COM 3H
CA NM138295
SUNRISE MDP1 8-5 FED COM 4H
CA NM138296
SUNRISE MDP1 8-5 FED COM 5H
SUNRISE MDP1 8-5 FED COM 6H

CA NMNM106392073 - WC
APPROVAL PENDING
CHUCK SMITH MDP1 8_17 FED COM 3H
CHUCK SMITH MDP1 8_17 FED COM 24H
CHUCK SMITH MDP1 8_17 FED COM 25H
CHUCK SMITH MDP1 8_17 FED COM 26H

CA NMNM106385693 - BS
CHUCK SMITH MDP1 8_17 FED COM 21H
CHUCK SMITH MDP1 8_17 FED COM 22H
CHUCK SMITH MDP1 8_17 FED COM 23H

CA NMNM106744570 - WC
CHUCK SMITH MDP1 8_17 FED COM 2H
CHUCK SMITH MDP1 8 17 FED COM 31H
CHUCK SMITH MDP1 8 17 FED COM 32H
CHUCK SMITH MDP1 8 17 FED COM 1H

Sand Dunes South Corridor CTB

OIL FMP &
PRIMARY GAS
FMP &
SECONDARY
GAS FMP (VRU
FLASH GAS)
LOCATION

GILA 12 FED 2H
NIMITZ 12 FED 3H
NIMITZ 12 FED 4H
NIMITZ 12 FED 5H

CA NMNM105777379 - WC
JEFF SMITH MDP1 7-18 FED COM 174H

CA NMNM105777378 - WC
JEFF SMITH MDP1 7_18 FED COM
171H, 172H, 173H

CA NMNM106385694 - BS
CHUCK SMITH MDP1 8_17 FED COM 4H
CHUCK SMITH MDP1 8_17 FED COM 5H
CHUCK SMITH MDP1 8_17 FED COM 44H

Legend:
Sand Dunes South Corridor CTB
Wells

File: M:\Land\Permian_GOM\New_Mexico\ArcPro Maps\PEOR Regulatory Map\Projects\South Corridor CTB.aprx

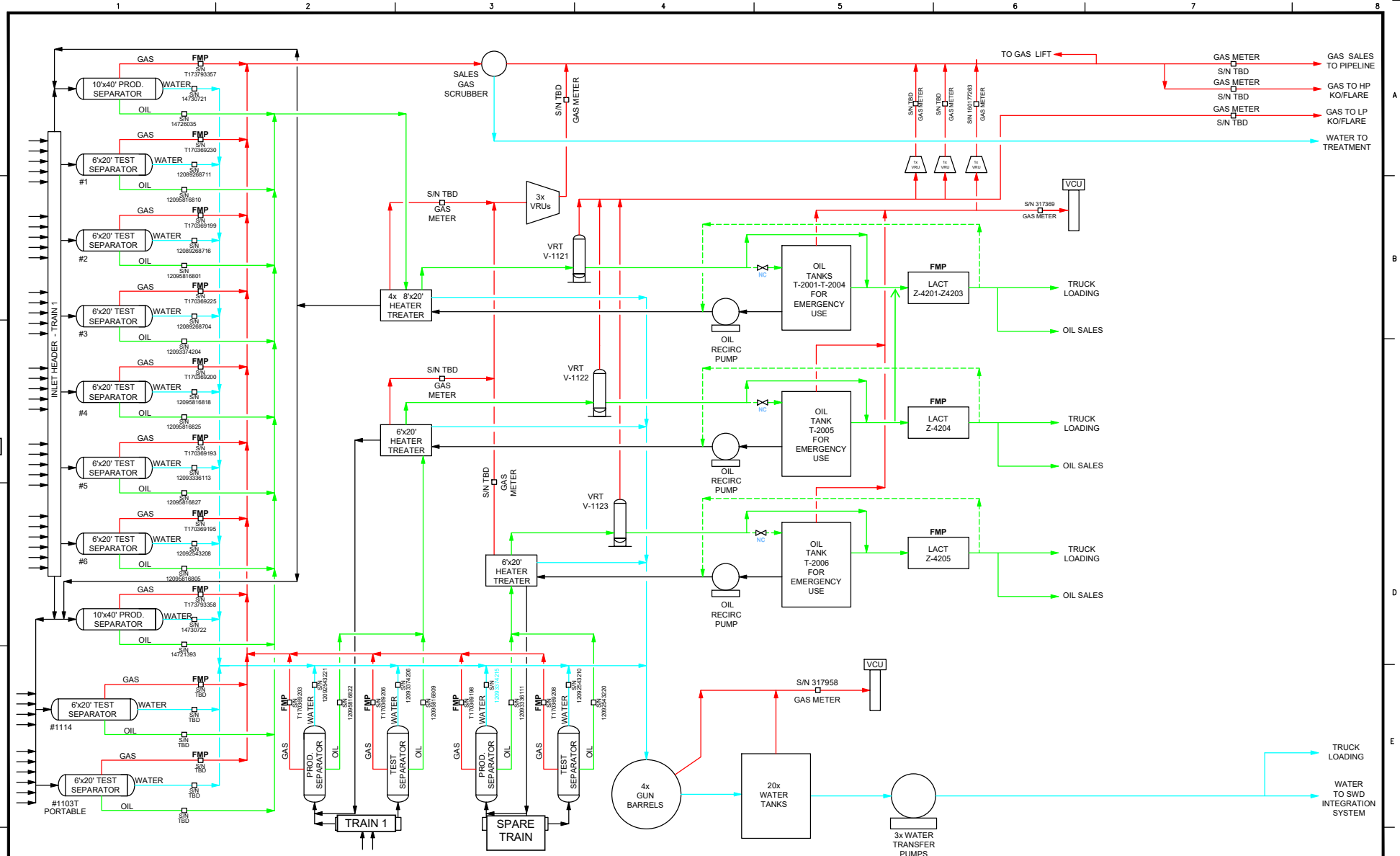

REV	DATE	DRAWN BY	CHECKED BY	DESCRIPTION	ONEOXY PROJECT #	PROJ. ENG.	SIGNATURE
A	02-22-23	CGW	SM	ISSUED FOR REVIEW	–	–	–

OXY APPROVAL

PROJECT DRAWING REVISION

IN CASE OF DEVIATIONS A MARKED UP PRINT SHALL BE SENT TO THE PROJECT ENGINEER

REV	DATE	APP. BY	DESCRIPTION	PROJECT NUMBER	PROJ.ENG.	SPEC.ENG.
G	8-2-22		ISSUED FOR REVIEW	–	–	–

OXY APPROVAL

MASTER DRAWING REVISION

NOTES/REFERENCE DRAWINGS

FACILITY CODE: SAND DUNES SOUTH CORRIDOR CTB

FACILITY TYPE: CTB

DISC. CODE: OP-L0901-BT002

DWG.TYPE : LICENSE – PERMIT

DESCRIPTION: SAND DUNES COMMINGLE CTB

SCALE : SCALE CAD DRAWING

Oxy USA Inc.- Permian Resources
A subsidiary of Occidental Petroleum Corporation

DWG NO	ASSET	FACILITY CODE	DISC. CODE	SERIAL NUMBER	SHEET NUMBER	REV
	PER	OPL0901BT002	HES	00001	001	G

File Path:\\OHOASDR1\Data\atlas\Primary F&C Folder\DESIGN AND DRAFTING\STD ENGINEERING INFORMATION\REGULATORY\SAND DUNES SOUTH CORRIDOR CTB BATTERY - 300158T0854\PER-OPL0901BT002-HES-00001-001.dwg Saved by: WARDCH on: Feb. 22, 23 - 3:46 PM

1625 N. French Dr., Hobbs, NM 88240
Phone: (575) 393-6161 Fax: (575) 393-0720
District II
811 S. First St., Artesia, NM 88210
Phone: (575) 748-1283 Fax: (575) 748-9720
District III
1000 Rio Brazos Road, Aztec, NM 87410
Phone: (505) 334-6178 Fax: (505) 334-6170
District IV
1220 S. St. Francis Dr., Santa Fe, NM 87505
Phone: (505) 476-3460 Fax: (505) 476-3462

State of New Mexico
Energy, Minerals & Natural Resources Department
OIL CONSERVATION DIVISION
1220 South St. Francis Dr.
Santa Fe, NM 87505

Form C-102
Revised August 1, 2011
Submit one copy to appropriate District Office

☒ AMENDED REPORT

WELL LOCATION AND ACREAGE DEDICATION AS-DRILLED PLAT

[1] API Number	[2] Pool Code	[3] Pool Name
30-015-47241	98220	PURPLE SAGE; WOLFCAMP

[4] Property Code	Property Name	[6] Well Number
328304	JEFF SMITH MDP1 7_18 FED COM	174H

[7] OGRID No.	[8] Operator Name	[9] Elevation
16696	OXY USA INC.	3460'

[10] Surface Location

UL or lot no.	Section	Township	Range	Lot Idn	Feet from the	North/South line	Feet from the	East/West line	County
N	6	24S	31E		275	SOUTH	2291	WEST	EDDY

[11] Bottom Hole Location If Different From Surface

UL or lot no.	Section	Township	Range	Lot Idn	Feet from the	North/South line	Feet from the	East/West line	County
O	18	24S	31E		180	SOUTH	1766	EAST	EDDY

[12] Dedicated Acres	[13] Joint or Infill	[14] Consolidation Code	[15] Order No.
640.0			NSL-8345

No allowable will be assigned to this completion until all interests have been consolidated or a non-standard unit has been approved by the division.

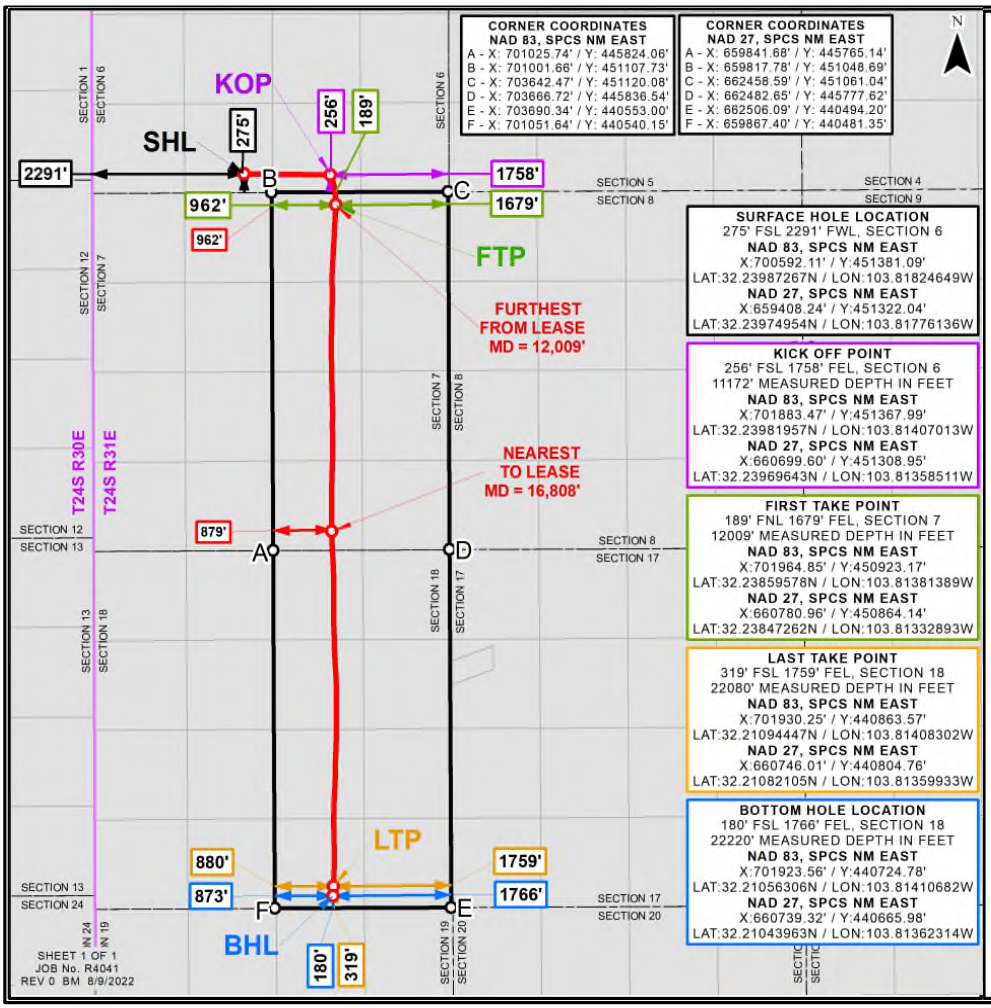

[17] OPERATOR CERTIFICATION

I hereby certify that the information contained herein is true and complete to the best of my knowledge and belief, and that this organization either owns a working interest or unleased mineral interest in the land including the proposed bottom hole location or has a right to drill this well at this location pursuant to a contract with an owner of such a mineral or working interest, or to a voluntary pooling agreement or a compulsory pooling order heretofore entered by the division.

Signature: [signature] Date: 8/10/22

JANA MENDIOLA
Printed Name

janalyn_mendiola@oxy.com
E-mail Address

[18] SURVEYOR CERTIFICATION

I hereby certify that the well surface location shown on this plat was plotted from field notes of the as-staked surveys made by me or under my supervision, and that the same is true and correct to the best of my belief. Data used for underground measurements were provided by others for reference only and does not constitute field measurements performed by R-Squared Global.

AUGUST 9, 2022
Date of Survey

Signature and Seal of Professional Surveyor: [signature]

LLOYD P. SHORT NEW MEXICO 21653 PROFESSIONAL SURVEYOR

Certificate Number
LLOYD P. SHORT 21653

Distances/areas relative to NAD 83 Combined Scale Factor: 0.99977704 Convergence Angle: 00°16'56.57999"

NM OIL CONSERVATION
ARTESIA DISTRICT

NOV 16 2018

RECEIVED

District I
1625 N. French Dr., Hobbs, NM 88240
Phone: (575) 393-6161 Fax: (575) 393-0720
District II
811 S. First St., Artesia, NM 88210
Phone: (575) 748-1283 Fax: (575) 748-9720
District III
1000 Rio Brazos Road, Aztec, NM 87410
Phone: (505) 334-6178 Fax: (505) 334-6170
District IV
1220 S. St. Francis Dr., Santa Fe, NM 87505
Phone: (505) 476-3460 Fax: (505) 476-3462

State of New Mexico
Energy, Minerals & Natural Resources Department
OIL CONSERVATION DIVISION
1220 South St. Francis Dr.
Santa Fe, NM 87505

Form C-102
Revised August 1, 2011
Submit one copy to appropriate District Office

☒ AMENDED REPORT

WELL LOCATION AND ACREAGE DEDICATION PLAT

API Number	Pool Code	Pool Name
30-015-44528	13367	Cotton Draw Bone Spring

Property Code	Property Name	Well Number
319812	NIMITZ MDP1 "12" FEDERAL COM	6H

OGRID No.	Operator Name	Elevation
14696	OXY USA INC.	3526.0'

Surface Location

UL or lot no.	Section	Township	Range	Lot Idn	Feet from the	North/South line	Feet from the	East/West line	County
P	12	24 SOUTH	30 EAST, N.M.P.M.		379'	SOUTH	778'	EAST	EDDY

Bottom Hole Location If Different From Surface

UL or lot no.	Section	Township	Range	Lot Idn	Feet from the	North/South line	Feet from the	East/West line	County
1	1	24 SOUTH	30 EAST, N.M.P.M.		20	NORTH	511'	EAST	EDDY

Dedicated Acres	Joint or Infill	Consolidation Code	Order No.
640			Infill Well

No allowable will be assigned to this completion until all interests have been consolidated or a non-standard unit has been approved by the division.

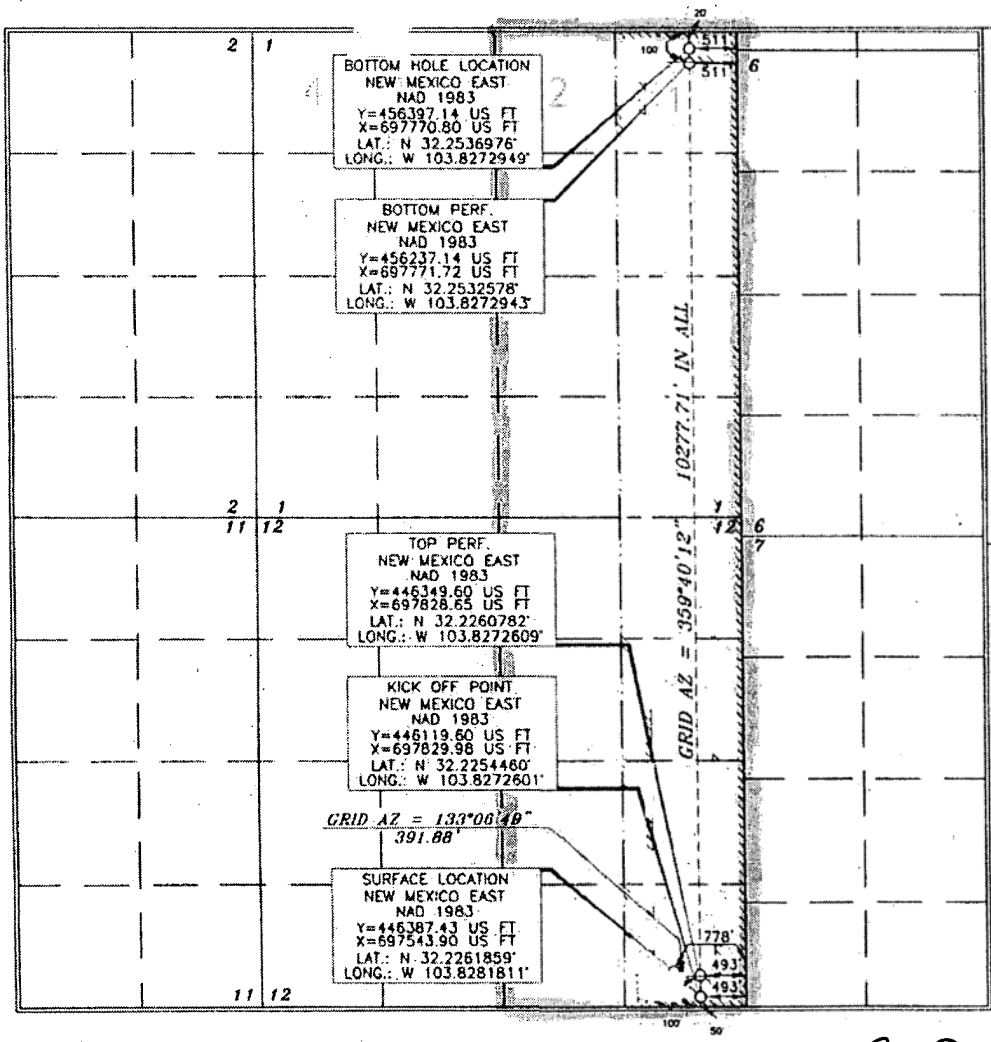

OPERATOR CERTIFICATION

I hereby certify that the information contained herein is true and complete to the best of my knowledge and belief, and that this organization either owns a working interest or unleased mineral interest in the land including the proposed bottom hole location or has a right to drill this well at this location pursuant to a contract with an owner of such a mineral or working interest, or to a voluntary pooling agreement or a compulsory pooling order heretofore entered by the division.

Sarah Chapman 11/14/18
Signature Date

Sarah Chapman
Printed Name

sarah_chapman@oxy.com
E-mail Address

SURVEYOR CERTIFICATION

I hereby certify that the well location shown on this plat was plotted from field notes of actual surveys made by me or under my supervision, and that the same is true and correct to the best of my belief.

APRIL 10, 2017
Date of Survey

Signature and Seal of Professional Surveyor:

Terry J. Asel 8/24/2017
Certificate Number 15079

WO# 160114WL-c (Rev. C) (KA)

RVP 10-9-19

NM OIL CONSERVATION
ARTESIA DISTRICT

NOV 16 2018

RECEIVED

District I
1625 N. French Dr., Hobbs, NM 88240
Phone: (575) 393-6161 Fax: (575) 393-0720
District II
811 S. First St., Artesia, NM 88210
Phone: (575) 748-1283 Fax: (575) 748-9720
District III
1000 Rio Brazos Road, Aztec, NM 87410
Phone: (505) 334-6178 Fax: (505) 334-6170
District IV
1220 S. St. Francis Dr., Santa Fe, NM 87505
Phone: (505) 476-3460 Fax: (505) 476-3462

State of New Mexico
Energy, Minerals & Natural Resources Department
OIL CONSERVATION DIVISION
1220 South St. Francis Dr.
Santa Fe, NM 87505

Form C-102
Revised August 1, 2011
Submit one copy to appropriate District Office

☒ AMENDED REPORT

WELL LOCATION AND ACREAGE DEDICATION PLAT

API Number	Pool Code	Pool Name
30-015-44529	13367	Cotton Draw Bone Spring

Property Code	Property Name	Well Number
319812	NIMITZ MDP1 "12" FEDERAL COM	7H

OGRID No.	Operator Name	Elevation
16696	OXY USA INC.	3525.9'

Surface Location

UL or lot no.	Section	Township	Range	Lot Idn	Feet from the	North/South line	Feet from the	East/West line	County
P	12	24 SOUTH	30 EAST, N.M.P.M.		379'	SOUTH	868'	EAST	EDDY

Bottom Hole Location If Different From Surface

UL or lot no.	Section	Township	Range	Lot Idn	Feet from the	North/South line	Feet from the	East/West line	County
1	1	24 SOUTH	30 EAST, N.M.P.M.		20'	NORTH	1270'	EAST	EDDY

Dedicated Acres	Joint or Infill	Consolidation Code	Order No.
640 - 639.95			

No allowable will be assigned to this completion until all interests have been consolidated or a non-standard unit has been approved by the division.

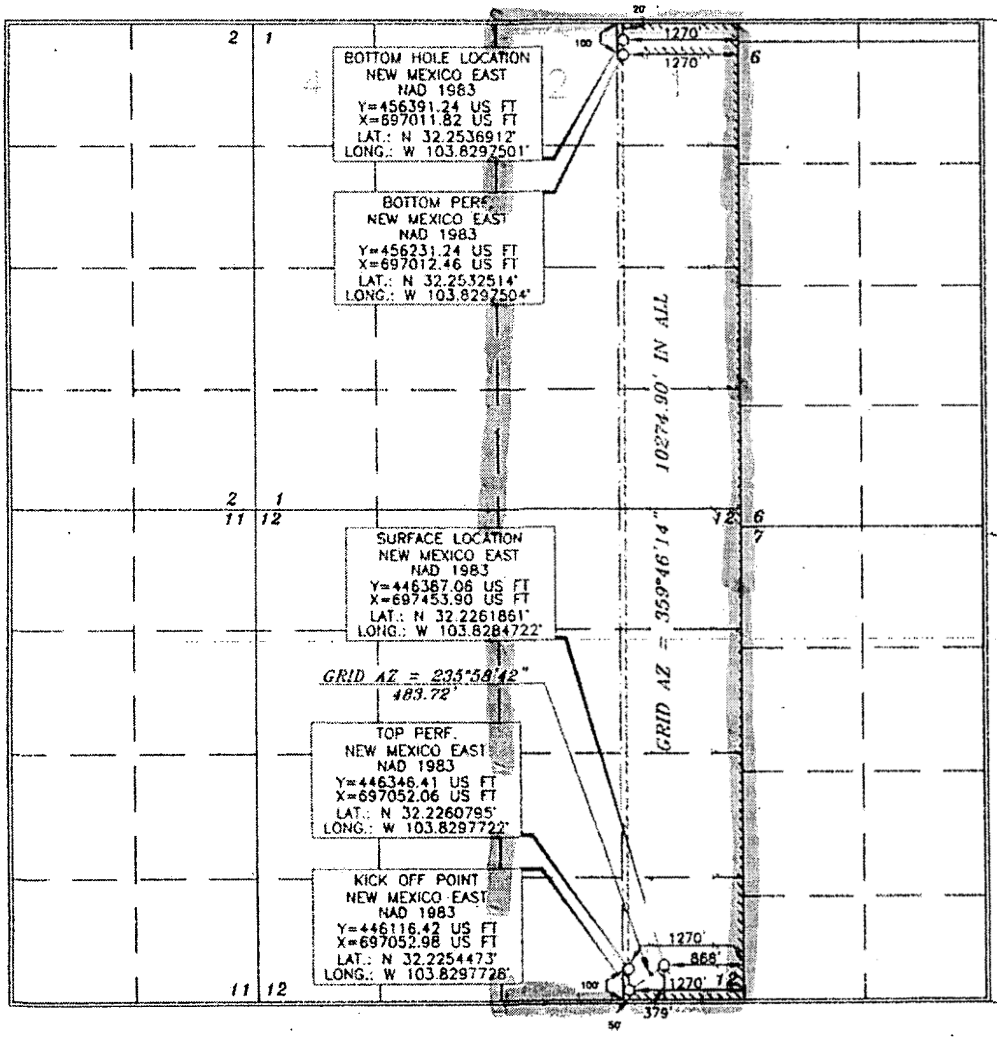

OPERATOR CERTIFICATION

I hereby certify that the information contained herein is true and complete to the best of my knowledge and belief, and that this organization either owns a working interest or unleased mineral interest in the land including the proposed bottom hole location or has a right to drill this well at this location pursuant to a contract with an owner of such a mineral or working interest, or to a voluntary pooling agreement or a compulsory pooling order heretofore entered by the division.

Signature Date 11/8/18

Justin Morris
Printed Name

Justin_Morris@oxy.com
E-mail Address

SURVEYOR CERTIFICATION

I hereby certify that the well location shown on this plat was plotted from field notes of actual surveys made by me or under my supervision, and that the same is true and correct to the best of my belief.

APRIL 10, 2017
Date of Survey

Signature and Seal of Professional Surveyor:

TERRY J. ASEL
15079
NEW MEXICO
PROFESSIONAL LAND SURVEYOR

Certificate Number 15079

WO# 151015WL-d (Rev. D) (KA)

10-9-19 RLB

C-102 Submit Electronically Via OCD Permitting	State of New Mexico Energy, Minerals, & Natural Resources Department OIL CONSERVATION DIVISION	Revised July 9, 2024 PAGE 1 OF 2 Submittal Type: ☐ Initial Submittal ☐ Amended Report ☒ As Drilled

WELL LOCATION INFORMATION

API Number	Pool Code	Pool Name
30-015-44294	13367	COTTON DRAW; BONE SPRING

Property Code	Property Name	Well Number
317687	PALLADIUM MDP1 7-6 FEDERAL COM	5H

OGRID No.	Operator Name	Ground Level Elevation
16696	OXY USA INC.	3526'

Surface Owner: ☐ State ☐ Fee ☐ Tribal ☑ Federal

Mineral Owner: ☐ State ☐ Fee ☐ Tribal ☑ Federal

Surface Location

UL	Section	Township	Range	Lot	Ft. from N/S	Ft. from E/W	Latitude (NAD83)	Longitude (NAD83)	County
P	07	24S	31E		295' FSL	591' FEL	32.22540084	-103.81030005	EDDY

Bottom Hole Location

UL	Section	Township	Range	Lot	Ft. from N/S	Ft. from E/W	Latitude (NAD83)	Longitude (NAD83)	County
	06	24S	31E	1	50' FNL	1241' FEL	32.25351903	-103.81235908	EDDY

Dedicated Acres	Infill or Defining Well	Defining Well API	Overlapping Spacing Unit (Y/N)	Consolidation Code
640.41	DEFINING		N	N/A

Order Numbers: NSL-7549

Well setbacks are under Common Ownership: ☐ Yes ☐ No

Kick Off Point (KOP)

UL	Section	Township	Range	Lot	Ft. from N/S	Ft. from E/W	Latitude (NAD83)	Longitude (NAD83)	County
P	07	24S	31E		91' FSL	1158' FEL	32.22484124	-103.81213500	EDDY

First Take Point (FTP)

UL	Section	Township	Range	Lot	Ft. from N/S	Ft. from E/W	Latitude (NAD83)	Longitude (NAD83)	County
P	07	24S	31E		350' FSL	1267' FEL	32.22555297	-103.81248840	EDDY

Last Take Point (LTP)

UL	Section	Township	Range	Lot	Ft. from N/S	Ft. from E/W	Latitude (NAD83)	Longitude (NAD83)	County
	06	24S	31E	1	359' FNL	1238' FEL	32.25266974	-103.81235186	EDDY

Unitized Area or Area of Uniform Interest	Spacing Unit Type:	Ground Floor Elevation
N/A	☒ Horizontal ☐ Vertical	3526'

OPERATOR CERTIFICATIONS

I hereby certify that the information contained herein is true and complete to the best of my knowledge and belief, and, if the well is a vertical or directional well, that this organization either owns a working interest or unleased mineral interest in the land including the proposed bottom hole location or has a right to drill this well at this location pursuant to a contract with an owner of a working interest or unleased mineral interest, or to a voluntary pooling agreement or a compulsory pooling order heretofore entered by the division.

If this well is a horizontal well, I further certify that this organization has received the consent of at least one lessee or owner of a working interest or unleased mineral interest in each tract (in the target pool or formation) in which any part of the well's completed interval will be located or obtained a compulsory pooling order from the division.

Sara Guthrie — 8/27/2025

Signature — Date

Sara Guthrie

Printed Name

sara_guthrie@oxy.com

Email Address

SURVEYOR CERTIFICATIONS

I hereby certify that the well location shown on this plat was plotted from field notes of actual surveys made by me or under my supervision, and that the same is true and correct to the best of my belief. Data used for underground measurements were provided by others for reference only and does not constitute field measurements performed by Delta Field Services

LLOYD P. SHORT NEW MEXICO 21653 PROFESSIONAL SURVEYOR

Signature and Seal of Professional Surveyor

Certificate Number	Date of Survey
21653	AUG 25, 2025

Note: No allowable will be assigned to this completion until all interests have been consolidated or a non-standard unit has been approved by the division.

ACREAGE DEDICATION PLATS

PALLADIUM MDP1 7-6 FEDERAL COM 5H

BHL (NAD83)
X:702388.32' / Y:456354.26'
LAT:32.25351903 / LON:-103.81235908

BHL (NAD27)
X:661204.61' / Y:456295.10'
LAT:32.25339600 / LON:-103.81187349

LTP (NAD83)
X:702392.05' / Y:456045.31'
LAT:32.25266974 / LON:-103.81235186

LTP (NAD27)
X:661208.33' / Y:455986.16'
LAT:32.25254670 / LON:-103.81186631

PPP-1 (NAD83)
X:702391.89' / Y:451114.23'
LAT:32.23911527 / LON:-103.81242974

PPP-1 (NAD27)
X:661208.01' / Y:451055.19'
LAT:32.23899211 / LON:-103.81194480

FTP (NAD83)
X:702397.68' / Y:446180.34'
LAT:32.22555297 / LON:-103.81248840

FTP (NAD27)
X:661213.63' / Y:446121.41'
LAT:32.22542969 / LON:-103.81200408

KOP (NAD83)
X:702508.22' / Y:445921.95'
LAT:32.22484124 / LON:-103.81213500

KOP (NAD27)
X:661324.16' / Y:445863.03'
LAT:32.22471794 / LON:-103.81165072

SHL (NAD83)
X:703074.66' / Y:446128.28'
LAT:32.22540084 / LON:-103.81030005

SHL (NAD27)
X:661890.60' / Y:446069.36'
LAT:32.22527754 / LON:-103.80981580

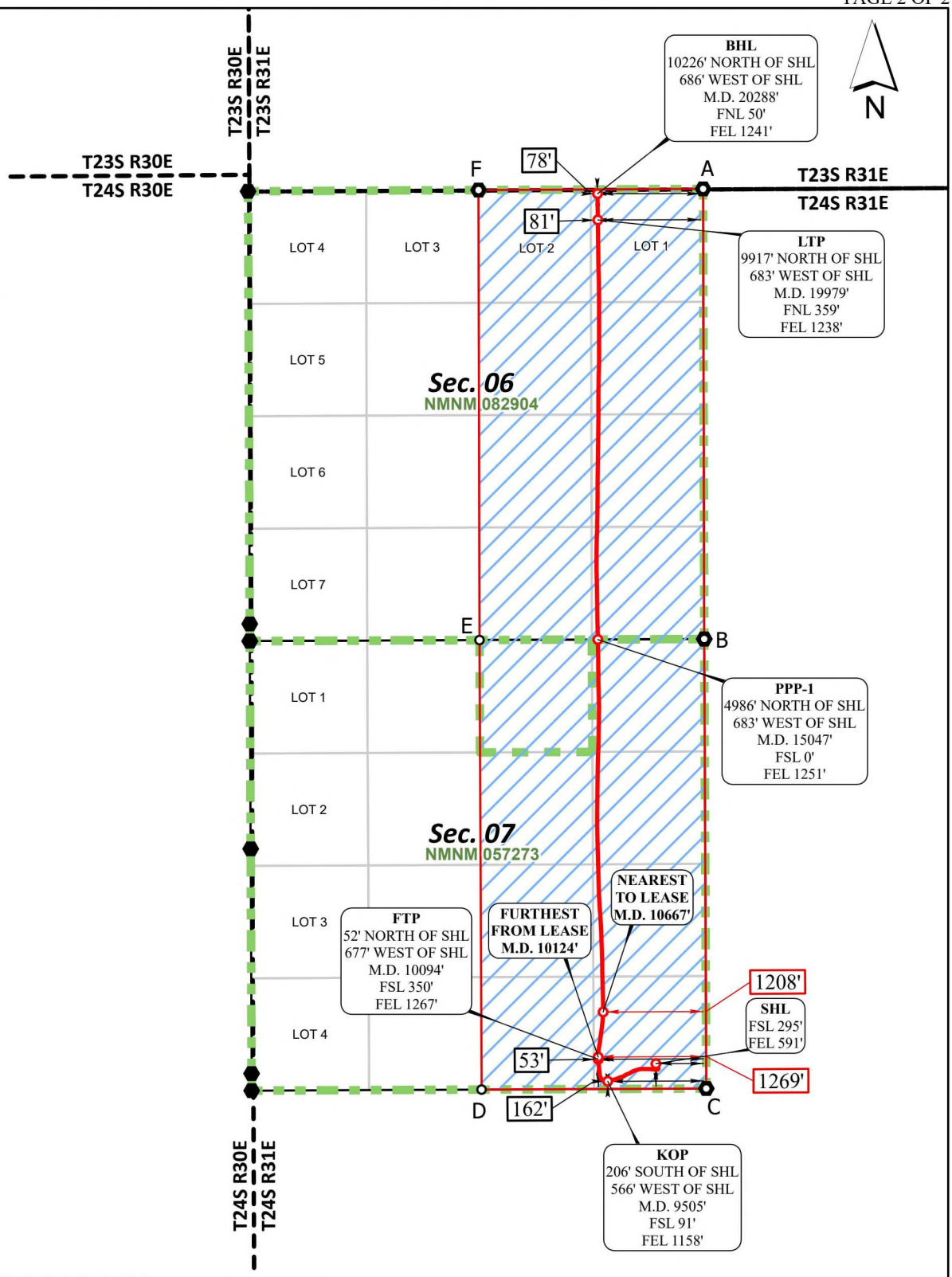

CORNER COORDINATES NAD 83, SPCS NM EAST	CORNER COORDINATES NAD 27, SPCS NM EAST
A - X: 703629.20' / Y:456410.90'	A - X: 662445.49' / Y:456351.74'
B - X: 703642.47' / Y:451120.08'	B - X: 662458.59' / Y:451061.04'
C - X: 703666.72' / Y:445836.54'	C - X: 662482.65' / Y:445777.62'
D - X: 701025.74' / Y:445824.06'	D - X: 659841.68' / Y:445765.14'
E - X: 701001.66' / Y:451107.73'	E - X: 659817.78' / Y:451048.69'
F - X: 700990.29' / Y:456396.89'	F - X: 659806.58' / Y:456337.73'

*FTP TO LTP LEASE DISTANCES

TRACT	DISTANCE
NMNM 057273	4939.26'
NMNM 082904	4931.56'
TOTAL	9870.82'

DELTA FIELD SERVICES

Drill Line Events · Section Corners · Drill Line · Dimension Lines · Federal Leases · HSU · HSU Corners

JOB No. 20251248
REV 0 NDS 8/25/2025

All bearings and coordinates refer to New Mexico State Plane Coordinate System, East Zone, U.S. Survey Feet.

Distances/areas relative to NAD 83 grid measurements. Combined Scale Factor: 0.99977070 and a Convergence Angle: 0.27992612°

MAILED 11/05/2025

To Company Name	To Name	To Address Line 1	To City	To State	To ZIP	Tracking Number
	RIVERBEND OIL GAS IX INVEST LLC	1200 SMITH STREET SUITE 1950	HOUSTON	TX	77002	_9414811898765476150734
	WEST BEND ENERGY PARTNERS III LLC	1320 SOUTH UNIVERSITY DR STE 701	FORT WORTH	TX	76107	_9414811898765476150918
	MARY TAYLOR MORGAN CRAIGHEAD	13350 CR 100 W	VERNON	TX	76384	_9414811898765476150956
	SITIO PERMIAN LP	1401 LAWRENCE ST STE 1750	DENVER	CO	80202	_9414811898765476150901
LJA CHARITABLE INVESTMENTS LLC	LAURA AND JOHN ARNOLD FDN	1717 WEST LOOP SOUTH STE 1800	HOUSTON	TX	77027	_9414811898765476150994
PIVOTAL ROYALTIES PARTNERS LP	PRP DELAWARE BASIN LLC	2021 MCKINNEY AVE STE 1250	DALLAS	TX	75201	_9414811898765476150949
	COLGATE ENERGY MANAGEMENT LLC	300 N MARIENFELD ST STE 1000	MIDLAND	TX	79701	_9414811898765476150987
	PERMIAN BASIN INVESTMENT CORP	4010 CHAINHURST DR	RICHARDSON	TX	75082	_9414811898765476150932
	MSH FAMILY REAL ESTATE PARTNERSHIP II LLC	4143 MAPLE AVE SUITE 500	DALLAS	TX	75219	_9414811898765476150970
	SMP SIDECAR TITAN MINERAL HOLDINGS LP	4143 MAPLE AVE SUITE 500	DALLAS	TX	75219	_9414811898765476150611
	SMP TITAN FLEX LP	4143 MAPLE AVE SUITE 500	DALLAS	TX	75219	_9414811898765476150659
	SMP TITAN MINERAL HOLDINGS LP	4143 MAPLE AVE SUITE 500	DALLAS	TX	75219	_9414811898765476150666
	SMP PATRIOT MINERAL HOLDINGS LLC	4143 MAPLE AVE SUITE 500	DALLAS	TX	75219	_9414811898765476150628
	MITCHELL EXPLORATION	6902 HOMESTEAD BLVD	MIDLAND	TX	79707	_9414811898765476150604
	MCCOMBS ENERGY LTD	755 MULBERRY AVE STE 600	SAN ANTONIO	TX	78212	_9414811898765476150680
PRESTON MARSHALL	RUSK CAPITAL MANAGEMENT LLC	7600 W TIDWELL RD STE 800	HOUSTON	TX	77040	_9414811898765476150673
	KRINGEN OIL LLC	8540 E MCDOWELL RD UNIT 59	MESA	AZ	85207	_9414811898765476150116
	KRP LEGACY ISLES LLC	DEPT 300 PO BOX 59000	LAFAYETTE	LA	70505	_9414811898765476150109

To Company Name	To Name	To Address Line 1	To City	To State	To ZIP	Tracking Number
	BUTKIN INVESTMENT CO LLC	P O BOX 2090	DUNCAN	OK	73534	_9414811898765476150147
	PAUL R BARWIS	P O BOX 230	MIDLAND	TX	79702	_9414811898765476150185
WILLIAM N SUSAN E HEISS TTEE CO MIDHILL	WILLIAM N HEISS PROFIT SHARING	P O BOX 2680	CASPER	WY	82602	_9414811898765476150130
	PEGASUS RESOURCES NM LLC	P O BOX 470698	FORT WORTH	TX	76147	_9414811898765476150178
	ROEC INC	P O BOX 490	GRAND JUNCTION	CO	81502	_9414811898765476150352
	ENERGY PROPERTIES LIMITED LP	P O BOX 51408	CASPER	WY	82605	_9414811898765476150321
	JAREED PARTNERS LTD	P O BOX 51451	MIDLAND	TX	79710	_9414811898765476150307
JOHN KYLE THOMA TTEE	CORNERSTONE FAMILY TRUST	P O BOX 558	PEYTON	CO	80831	_9414811898765476150390
	ROBIN OIL AND GAS CORPORATION	P O BOX 720420	OKLAHOMA CITY	OK	73172	_9414811898765476150345
	SNYDER RANCH INC	PO BOX 2158	HOBBS	NM	88241	_9414811898765476150383
	C MARK WHEELER	PO BOX 248	ROUND ROCK	TX	78680	_9414811898765476150338
	SANTA ELENA MINERALS IV LP	PO BOX 470788	FORT WORTH	TX	76147	_9414811898765476150017
	MILESTONE OIL LLC	PO BOX 52650	TULSA	OK	74137	_9414811898765476150062
EILEEN M GROOMS TRUSTEE	EMG REVOC TRUST	PO BOX 70	ROSWELL	NM	88202	_9414811898765476150000
	CHISOS MINERALS LLC	PO BOX 731112	DALLAS	TX	75373	_9414811898765476150048
	SANTA ELENA MINERALS V LP	PO BOX 732885	DALLAS	TX	75373	_9414811898765476150086

OXY USA WTP Limited Partnership / OXY USA INC / OCCIDENTAL PERMIAN LTD
A subsidiary of Occidental Petroleum Corporation

5 Greenway Plaza, Suite 110, Houston, Texas 77046
P.O. Box 4294, Houston, Texas 77210-4294
Direct: 713.366.5106
Sandra_Musallam@oxy.com

November 5, 2025

Re: Request for Pool and Lease Surface Commingling, Off-lease Measurement, Sales, & Storage for Oil Production at the Sand Dunes South Corridor Battery Train 1

Dear Interest Owner:

This is to advise you that OXY USA INC is filing an application with NMOCD to amend previously approved Order PLC 898C for oil production at the Sand Dunes South Corridor Battery Train 1. A copy of the application is attached. This request is for existing and future wells in the Lease / Communitization Agreements and Pools in the attached application.

Any objections or requests for a hearing regarding this application must be submitted to the New Mexico Oil Conservation Division Santa Fe Office within 20 Days from the date of this letter.

Pursuant to Statewide rule 19.15.12.10(C)(4)(g) OXY USA INC requests the option to include additional pools or leases within the defined parameters set forth in the order for future additions.

For questions regarding this application, please contact Sandra Musallam at (713) 366-5106.

Respectfully,

OXY USA INC
Sandra Musallam
Regulatory Engineer
Sandra_Musallam@oxy.com

Affidavit of Publication

No. 71050

State of New Mexico

County of Eddy:

Publisher

Adrian Hedden

being duly sworn, sayes that he is the **Publisher**

of the Carlsbad Current Argus, a weekly newspaper of general circulation, published in English at Carlsbad, said county and state, and that the hereto attached

Legal Ad

was published in a regular and entire issue of the said Carlsbad Current Argus, a weekly newspaper duly qualified for that purpose within the meaning of Chapter 167 of the 1937 Session Laws of the state of New Mexico for

1 Consecutive weeks/day on the same day as follows:

First Publication	November 1, 2025
Second Publication	
Third Publication	
Fourth Publication	
Fifth Publication	
Sixth Publication	
Seventh Publication	
Eighth Publication	

Subscribed ans sworn before me this

3rd day of November 2025

LATISHA ROMINE
Notary Public, State of New Mexico
Commission No. 1076338
My Commission Expires
05-12-2027

Latisha Romine

Latisha Romine

Notary Public, Eddy County, New Mexico

Copy of Publication:

Notice of Application for Surface Commingling

OXY USA INC located at 5 Greenway Plaza, Suite 110 Houston TX 77046 is applying to the NMOCD to amend surface commingle permit PLC 898C for oil production at the Sand Dunes South Corridor Battery. The battery is located in Eddy County in Section 18 in T24S R31E. Wells going to this battery are located in Section 31 in T23S R31E, Sections 5, 6, 7, 8, 17 and 18 in T24S R31E and Sections 1, 12 and 13 in T24S R30E. Production is from the Cotton Draw; Bone Spring, Poker Lake; Delaware Northwest and Purple Sage; Wolfcamp Gas.

Pursuant to NMAC 19.15.12.10, interested parties must file objections or requests for hearing in writing with the divisions Santa Fe office within 20 days after publication, or the NMOCD may approve the application.

For questions pertaining to the application, please contact Sandra Musallam at (713) 366-5106.

71050-Published in Carlsbad Current Argus Nov. 1, 2025.

Tracking Number:
9405511899563567510734

Flags: Proof of Delivery Enhanced

Latest Update
Your item was delivered at an individual at the address of 1 Jefferson Ln Bedford, MA 01730 at 11:00 am on November 4, 2021.

See More Live USPS Tracking
See More Delivery Options

Delivered
Delivered, Left with Individual
Bedford, MA 01730
November 4, 2021, 11:00 am

See All Tracking Events
What Do USPS Tracking Statuses Mean?

Rate:

Tracking Number:
9405511899563567510681

Flags: Proof of Delivery Enhanced

Latest Update
Your item was delivered at an individual at the address of 1 Jefferson Ln Bedford, MA 01730 at 11:00 am on November 4, 2021.

See More Live USPS Tracking
See More Delivery Options

Delivered
Delivered, Left with Individual
Bedford, MA 01730
November 4, 2021, 11:00 am

See All Tracking Events
What Do USPS Tracking Statuses Mean?

Rate:

Tracking Number:
9405511899563567510658

Flags: Proof of Delivery Enhanced

Latest Update
Your item was delivered at an individual at the address of 1 Jefferson Ln Bedford, MA 01730 at 11:00 am on November 4, 2021.

See More Live USPS Tracking
See More Delivery Options

Delivered
Delivered, Left with Individual
Bedford, MA 01730
November 4, 2021, 11:00 am

See All Tracking Events
What Do USPS Tracking Statuses Mean?

Rate:

Tracking Number:
9405511899563567510641

Flags: Proof of Delivery Enhanced

Latest Update
Your item was delivered at the front door, reception area, or mail room at 9:00 am on November 4, 2021 in BEDFORD, MA 01730.

See More Live USPS Tracking
See More Delivery Options

Delivered
Delivered, Front Door/Porch/Mailbox Well Room
BEDFORD, MA 01730
November 4, 2021, 9:00 am

See All Tracking Events
What Do USPS Tracking Statuses Mean?

Rate:

Tracking Number:
9405511899563567510627

Flags: Proof of Delivery Enhanced

Latest Update
Your item was delivered at an individual at the address of 1 Jefferson Ln Bedford, MA 01730 at 11:00 am on November 4, 2021.

See More Live USPS Tracking
See More Delivery Options

Delivered
Delivered, Left with Individual
Bedford, MA 01730
November 4, 2021, 11:00 am

See All Tracking Events
What Do USPS Tracking Statuses Mean?

Rate:

Tracking Number:
9405511899563567510610

Flags: Proof of Delivery Enhanced

Latest Update
Your item was delivered at the front door, reception area, or mail room at 9:00 am on November 4, 2021 in BEDFORD, MA 01730.

See More Live USPS Tracking
See More Delivery Options

Delivered
Delivered, Front Door/Porch/Mailbox Well Room
BEDFORD, MA 01730
November 4, 2021, 9:00 am

See All Tracking Events
What Do USPS Tracking Statuses Mean?

Rate:

Tracking Number:
9405511899563567510611

Flags: Proof of Delivery Enhanced

Latest Update
Your item was delivered at the front door, reception area, or mail room at 9:00 am on November 4, 2021 in BEDFORD, MA 01730.

See More Live USPS Tracking
See More Delivery Options

Delivered
Delivered, Front Door/Porch/Mailbox Well Room
BEDFORD, MA 01730
November 4, 2021, 9:00 am

See All Tracking Events
What Do USPS Tracking Statuses Mean?

Rate:

Tracking Number:
9405511899563567510669

Flags: Proof of Delivery Enhanced

Latest Update
Your item was delivered at the front door, reception area, or mail room at 9:00 am on November 4, 2021 in BEDFORD, MA 01730.

See More Live USPS Tracking
See More Delivery Options

Delivered
Delivered, Front Door/Porch/Mailbox Well Room
BEDFORD, MA 01730
November 4, 2021, 9:00 am

See All Tracking Events
What Do USPS Tracking Statuses Mean?

Rate:

Tracking Number:
9405511899563567510666

Flags: Proof of Delivery Enhanced

Latest Update
Your item was delivered at the front door, reception area, or mail room at 9:00 am on November 4, 2021 in BEDFORD, MA 01730.

See More Live USPS Tracking
See More Delivery Options

Delivered
Delivered, Front Door/Porch/Mailbox Well Room
BEDFORD, MA 01730
November 4, 2021, 9:00 am

See All Tracking Events
What Do USPS Tracking Statuses Mean?

Rate:

Tracking Number:
9405511899563567510628

Flags: Proof of Delivery Enhanced

Latest Update
Your package will arrive later than expected, but is still on time. It is currently in transit to the next facility.

See More Live USPS Tracking
See More Delivery Options

In Transit
Delivered
Out for Delivery
Expected by Monday

Moving Through Network
In Transit to Next Facility
Jacksonville, FL
Expected USPS Regional Facility
JACKSONVILLE NORTH DISTRIBUTION CENTER
Monday, November 8, 2021

See All Tracking Events
What Do USPS Tracking Statuses Mean?

Rate:

Tracking Number:
9405511899563567510604

Flags: Proof of Delivery Enhanced

Latest Update
Your item was delivered at an individual at the address of 1 Jefferson Ln Bedford, MA 01730 at 11:00 am on November 4, 2021.

See More Live USPS Tracking
See More Delivery Options

Delivered
Delivered, Left with Individual
Bedford, MA 01730
November 4, 2021, 11:00 am

See All Tracking Events
What Do USPS Tracking Statuses Mean?

Rate:

Tracking Number:
9405511899563567510580

Flags: Proof of Delivery Enhanced

Latest Update
Your item was delivered at an individual at the address of 1 Jefferson Ln Bedford, MA 01730 at 11:00 am on November 4, 2021.

See More Live USPS Tracking
See More Delivery Options

Delivered
Delivered, Left with Individual
Bedford, MA 01730
November 4, 2021, 11:00 am

See All Tracking Events
What Do USPS Tracking Statuses Mean?

Rate:

Tracking Number:
9405511899563567510573

Flags: Proof of Delivery Enhanced

Latest Update
Your item was delivered at an individual at the address of 1 Jefferson Ln Bedford, MA 01730 at 11:00 am on November 4, 2021.

See More Live USPS Tracking
See More Delivery Options

Delivered
Delivered, Left with Individual
Bedford, MA 01730
November 4, 2021, 11:00 am

See All Tracking Events
What Do USPS Tracking Statuses Mean?

Rate:

Tracking Number:
9405511899563567510516

Flags: Proof of Delivery Enhanced

Latest Update
Your item was delivered at an individual at the address of 1 Jefferson Ln Bedford, MA 01730 at 11:00 am on November 4, 2021.

See More Live USPS Tracking
See More Delivery Options

Delivered
Delivered, Left with Individual
Bedford, MA 01730
November 4, 2021, 11:00 am

See All Tracking Events
What Do USPS Tracking Statuses Mean?

Rate:

Tracking Number:
9405511899563567510509

Flags: Proof of Delivery Enhanced

Latest Update
Your item was picked up at the post office at 10:00 am on November 4, 2021 in BAYVIEW, VA 23693.

See More Live USPS Tracking
See More Delivery Options

Delivered
Delivered, Individual Picked Up at Post Office
BAYVIEW, VA 23693
November 4, 2021, 10:00 am

See All Tracking Events
What Do USPS Tracking Statuses Mean?

Rate:

Tracking Number:
9405511899563567510547

Flags: Proof of Delivery Enhanced

Latest Update
Your item has been delivered and is available at a PO Box at 10:00 am on November 13, 2021 in DUBLIN, OH, 43016.

See More Live USPS Tracking
See More Delivery Options

Delivered
Delivered, PO Box
DUBLIN, OH, 43016
November 13, 2021, 10:00 am

See All Tracking Events
What Do USPS Tracking Statuses Mean?

Rate:

Tracking Number:
9405511899563567510185

Flags: Proof of Delivery Enhanced

Latest Update
Your item was picked up at the post office at 12:00 am on November 12, 2021 in ALEXANDRIA, VA 22314.

See More Live USPS Tracking
See More Delivery Options

Delivered
Delivered, Individual Picked Up at Post Office
ALEXANDRIA, VA 22314
November 12, 2021, 12:00 am

See All Tracking Events
What Do USPS Tracking Statuses Mean?

Rate:

Tracking Number:
9405511899563567510130

Flags: Proof of Delivery Enhanced

Latest Update
Your item was picked up at the post office at 7:07 am on November 12, 2021 in ALEXANDRIA, VA 22314.

See More Live USPS Tracking
See More Delivery Options

Delivered
Delivered, Individual Picked Up at Post Office
ALEXANDRIA, VA 22314
November 12, 2021, 7:07 am

See All Tracking Events
What Do USPS Tracking Statuses Mean?

Rate:

Tracking Number:
9405511899563567510178

Flags: Proof of Delivery Enhanced

Latest Update
Your item has been delivered and is available at a PO Box at 12:00 pm on November 10, 2021 in ALEXANDRIA, VA 22314.

See More Live USPS Tracking
See More Delivery Options

Delivered
Delivered, PO Box
SAINT MARYS, PA, 15857
November 10, 2021, 12:00 pm

See All Tracking Events
What Do USPS Tracking Statuses Mean?

Rate:

Tracking Number:
9405511899563567510352

Flags: Proof of Delivery Enhanced

Latest Update
Your item was picked up at the post office at 7:00 am on November 11, 2021 in ALEXANDRIA, VA 22314.

See More Live USPS Tracking
See More Delivery Options

Delivered
Delivered, Individual Picked Up at Post Office
ALEXANDRIA, VA 22314
November 11, 2021, 7:00 am

See All Tracking Events
What Do USPS Tracking Statuses Mean?

Rate:

Tracking Number:
9405511899563567510321

Flags: Proof of Delivery Enhanced

Latest Update
Your item was picked up at the post office at 7:08 am on November 11, 2021 in ALEXANDRIA, VA 22314.

See More Live USPS Tracking
See More Delivery Options

Delivered
Delivered, Individual Picked Up at Post Office
ALEXANDRIA, VA 22314
November 11, 2021, 7:08 am

See All Tracking Events
What Do USPS Tracking Statuses Mean?

Rate:

Tracking Number:
9405511899563567510307

Flags: Proof of Delivery Enhanced

Latest Update
Your item has been delivered and is available at a PO Box at 12:00 pm on November 10, 2021 in ALEXANDRIA, VA 22314.

See More Live USPS Tracking
See More Delivery Options

Delivered
Delivered, PO Box
SAINT MARYS, PA, 15857
November 10, 2021, 12:00 pm

See All Tracking Events
What Do USPS Tracking Statuses Mean?

Rate:

Tracking Number:
9405511899563567510390

Flags: Proof of Delivery Enhanced

Latest Update
Your item was picked up at the post office at 9:47 am on November 11, 2021 in CHEVERLY, MD 20785.

See More Live USPS Tracking
See More Delivery Options

Delivered
Delivered, Individual Picked Up at Post Office
CHEVERLY, MD 20785
November 11, 2021, 9:47 am

See All Tracking Events
What Do USPS Tracking Statuses Mean?

Rate:

Tracking Number:
9405511899563567510345

Flags: Proof of Delivery Enhanced

Latest Update
Your item has been delivered and is available at a PO Box at 7:00 am on November 10, 2021 in PITTSBURGH, PA, 15205.

See More Live USPS Tracking
See More Delivery Options

Delivered
Delivered, PO Box
PITTSBURGH, PA, 15205
November 10, 2021, 7:00 am

See All Tracking Events
What Do USPS Tracking Statuses Mean?

Rate:

Tracking Number:
9405511899563567510383

Flags: Proof of Delivery Enhanced

Latest Update
Your item was picked up at the post office at 11:00 am on November 11, 2021 in ALEXANDRIA, VA 22314.

See More Live USPS Tracking
See More Delivery Options

Delivered
Delivered, Individual Picked Up at Post Office
ALEXANDRIA, VA 22314
November 11, 2021, 11:00 am

See All Tracking Events
What Do USPS Tracking Statuses Mean?

Rate:

Tracking Number:
9405511899563567510338

Flags: Proof of Delivery Enhanced

Latest Update
Your item has been delivered and is available at a PO Box at 12:00 pm on November 10, 2021 in ALEXANDRIA, VA 22314.

See More Live USPS Tracking
See More Delivery Options

Delivered
Delivered, PO Box
SAINT MARYS, PA, 15857
November 10, 2021, 12:00 pm

See All Tracking Events
What Do USPS Tracking Statuses Mean?

Rate:

Tracking Number:
9405511899563567510017

Flags: Proof of Delivery Enhanced

Latest Update
Your item was picked up at the post office at 10:00 am on November 11, 2021 in ALEXANDRIA, VA 22314.

See More Live USPS Tracking
See More Delivery Options

Delivered
Delivered, PO Box
ALEXANDRIA, VA 22314
November 11, 2021, 10:00 am

See All Tracking Events
What Do USPS Tracking Statuses Mean?

Rate:

Tracking Number:
9405511899563567510062

Flags: Proof of Delivery Enhanced

Latest Update
Your package will arrive later than expected, but is still on time. It is currently in transit to the next facility.

See More Live USPS Tracking
See More Delivery Options

In Transit
Delivered
Out for Delivery
Expected by Monday

Moving Through Network
In Transit to Next Facility
Jacksonville, FL
Expected USPS Regional Facility
JACKSONVILLE NORTH DISTRIBUTION CENTER
Monday, November 8, 2021

See All Tracking Events
What Do USPS Tracking Statuses Mean?

Rate:

Tracking Number:
9405511899563567510000

Flags: Proof of Delivery Enhanced

Latest Update
Your item was picked up at the post office at 7:00 am on November 12, 2021 in ALEXANDRIA, VA 22314.

See More Live USPS Tracking
See More Delivery Options

Delivered
Delivered, Individual Picked Up at Post Office
ALEXANDRIA, VA 22314
November 12, 2021, 7:00 am

See All Tracking Events
What Do USPS Tracking Statuses Mean?

Rate:

Tracking Number:
9405511899563567510040

Flags: Proof of Delivery Enhanced

Latest Update
Your item was picked up at the post office at 10:00 am on November 12, 2021 in ALEXANDRIA, VA 22314.

See More Live USPS Tracking
See More Delivery Options

Delivered
Delivered, Individual Picked Up at Post Office
ALEXANDRIA, VA 22314
November 12, 2021, 10:00 am

See All Tracking Events
What Do USPS Tracking Statuses Mean?

Rate:

Tracking Number:
9405511899563567510086

Flags: Proof of Delivery Enhanced

Latest Update
Your item has been delivered and is available at a PO Box at 12:00 pm on November 10, 2021 in ALEXANDRIA, VA 22314.

See More Live USPS Tracking
See More Delivery Options

Delivered
Delivered, PO Box
SAINT MARYS, PA, 15857
November 10, 2021, 12:00 pm

See All Tracking Events
What Do USPS Tracking Statuses Mean?

Rate:

Received by OCD: 11/5/2025 8:39:04 AM

U.S. Department of the Interior
BUREAU OF LAND MANAGEMENT

Sundry Print Report

11/05/2025

Well Name	Well Number	US Well Number	Lease Number	Case Number	Operator
NIMITZ MDP1 12	9H	3001544581	NMNM82896	NMNM82896	OXY USA
NIMITZ MDP1 12	2H	3001544580	NMNM82896	NMNM82896	OXY USA
NIMITZ MDP1 12	1H	3001544526	NMNM82896	NMNM82896	OXY USA
NIMITZ MDP1 13	3H	3001544525	NMNM82896	NMNM82896	OXY USA
NIMITZ MDP1 13	2H	3001544498	NMNM82896	NMNM82896	OXY USA
NIMITZ MDP1	173H	3001548589	NMNM120897	NMNM106359462	OXY USA
NIMITZ MDP1	171H	3001548578	NMNM120897	NMNM106359460	OXY USA
NIMITZ MDP1	312H	3001548590	NMNM120897	NMNM106359462	OXY USA
NIMITZ MDP1	1H	3001548588	NMNM120897	NMNM106359462	OXY USA
NIMITZ MDP1	175H	3001553777	NMNM136214	NMNM106359464	OXY USA
NIMITZ MDP1	313H	3001553778	NMNM136214	NMNM106359464	OXY USA
NIMITZ MDP1	172H	3001548613	NMNM120897	NMNM106359462	OXY USA
NIMITZ MDP1	311H	3001548586	NMNM120897	NMNM106359460	OXY USA
NIMITZ MDP1 12	6H	3001544528	NMNM82896	NMNM82896	OXY USA
NIMITZ MDP1 12	7H	3001544529	NMNM82896	NMNM82896	OXY USA
NIMITZ 12	3H	3001541011	NMNM82896	NMNM82896	OXY USA
NIMITZ 12	5H	3001541657	NMNM82896	NMNM82896	OXY USA
NIMITZ 12	4H	3001541506	NMNM82896	NMNM82896	OXY USA
PALLADIUM	3Y	3001544457	NMNM57273	NMNM137685	OXY USA
PALLADIUM	2H	3001544299	NMNM57273	NMNM57273	OXY USA
PALLADIUM	1H	3001544298	NMNM57273	NMNM57273	OXY USA
PALLADIUM	5H	3001544294	NMNM57273	NMNM57273	OXY USA
PALLADIUM	6H	3001544293	NMNM57273	NMNM57273	OXY USA
PALLADIUM	4H	3001544295	NMNM89819	NMNM89819	OXY USA
SUNRISE MDP1	5H	3001544476	NMNM031963	NMNM031963	OXY USA
SUNRISE MDP1	4H	3001544475	NMNM29234	NMNM29234	OXY USA
SUNRISE MDP1	1H	3001544369	NMNM63757	NMNM63757	OXY USA
SUNRISE MDP1	6H	3001544473	NMNM031963	NMNM031963	OXY USA
SUNRISE MDP1	3H	3001544474	NMNM29234	NMNM29234	OXY USA
SUNRISE MDP1	171H	3001544930	NMNM89172	NMNM105766133	OXY USA
SUNRISE MDP1	2H	3001544395	NMNM63757	NMNM63757	OXY USA
SUNRISE MDP1	172H	3001544977	NMNM89172	NMNM89172	OXY USA
SUNRISE MDP1	173H	3001544931	NMNM89172	NMNM89172	OXY USA
SUNRISE MDP1	175H	3001545152	NMNM89172	NMNM89172	OXY USA

Released to Imaging: 1/8/2026 3:18:06 PM

Well Name	Well Number	US Well Number	Lease Number	Case Number	Operator
CHUCK SMITH	4H	3001554092	NMNM142696	NMNM106385694	OXY USA
CHUCK SMITH	5H	3001554050	NMNM142696	NMNM106385694	OXY USA
CHUCK SMITH	21H	3001554093	NMNM142143	NMNM106385693	OXY USA
CHUCK SMITH	22H	3001554097	NMNM142143	NMNM106385693	OXY USA
CHUCK SMITH	23H	3001554260	NMNM142143	NMNM106385693	OXY USA
CHUCK SMITH	24H	3001554047	NMNM142696	NMNM106392073	OXY USA
CHUCK SMITH	26H	3001554095	NMNM142696	NMNM106392073	OXY USA
CHUCK SMITH	25H	3001554094	NMNM142696	NMNM106392073	OXY USA
CHUCK SMITH	1H	3001554261	NMNM142143	NMNM142143	OXY USA
CHUCK SMITH	3H	3001554096	NMNM142143	NMNM106392073	OXY USA
CHUCK SMITH	2H	3001554049	NMNM142143	NMNM142143	OXY USA
CHUCK SMITH	32H	3001555469	NMNM142143	NMNM142143	OXY USA
CHUCK SMITH	31H	3001555468	NMNM142143	NMNM142143	OXY USA
NUGGET 6_31	14H	3001556039	NMNM82904	NMNM106737144	OXY USA
NUGGET 6_31	13H	3001556038	NMNM82904	NMNM106737144	OXY USA
NUGGET 6_31	12H	3001556047	NMNM82904	NMNM106737142	OXY USA
NUGGET 6_31	11H	3001555865	NMNM082904	NMNM106737142	OXY USA
NUGGET 6_31	7H	3001556037	NMNM82904	NMNM106737144	OXY USA
PATTON MDP1	173H	3001544991	NMNM89172	NMNM89172	OXY USA
PATTON MDP1	6H	3001544445	NMNM031963	NMNM031963	OXY USA
PATTON MDP1	175H	3001545078	NMNM89172	NMNM89172	OXY USA
PATTON MDP1	176H	3001545079	NMNM89172	NMNM89172	OXY USA
PATTON MDP1	2H	3001544460	NMNM63757	NMNM63757	OXY USA
PATTON MDP1	4H	3001544497	NMNM29234	NMNM29234	OXY USA
PATTON MDP1	3H	3001544496	NMNM29234	NMNM29234	OXY USA
PATTON MDP1	5H	3001544444	NMNM031963	NMNM031963	OXY USA
PATTON MDP1	171H	3001544989	NMNM89172	NMNM89172	OXY USA
PATTON MDP1	172H	3001544990	NMNM89172	NMNM89172	OXY USA
PATTON MDP1	1H	3001544459	NMNM63757	NMNM63757	OXY USA
PATTON MDP1	174H	3001545077	NMNM89172	NMNM89172	OXY USA
PATTON MDP1	23H	3001544316	NMNM89819	NMNM89819	OXY USA
PATTON MDP1	73H	3001544318	NMNM89819	NMNM89819	OXY USA
PATTON MDP1	33H	3001544338	NMNM89819	NMNM89819	OXY USA
PATTON MDP1	6H	3001543854	NMNM89819	NMNM89819	OXY USA
PATTON MDP1-	1H	3001544317	NMNM89819	NMNM89819	OXY USA
PATTON MDP1-	2H	3001544337	NMNM89819	NMNM89819	OXY USA
PATTON MDP1-	3H	3001544333	NMNM89819	NMNM89819	OXY USA

Notice of Intent

Sundry ID: 2870719

Type of Submission: Notice of Intent

Type of Action: Commingling (Surface)

Date Sundry Submitted: 08/28/2025

Time Sundry Submitted: 05:13

Date proposed operation will begin: 11/03/2025

Procedure Description: OXY requests approval according to 43 CFR 3173.14(b)(5) and IM 2025-034 to commingle production from Federal CAs at the Sand Dunes South Corridor Facility. Allocation methodology and other pertinent information are attached.

Surface Disturbance

Is any additional surface disturbance proposed?: No

NOI Attachments

Procedure Description

SAND_DUNES_COMMINGLE_BLM_Submittal_2025_09_20250923160019.pdf

Conditions of Approval

Specialist Review

Surface_Commingling_COA_20250923184951.pdf

CONFIDENTIAL

Operator

I certify that the foregoing is true and correct. Title 18 U.S.C. Section 1001 and Title 43 U.S.C. Section 1212, make it a crime for any person knowingly and willfully to make to any department or agency of the United States any false, fictitious or fraudulent statements or representations as to any matter within its jurisdiction. Electronic submission of Sundry Notices through this system satisfies regulations requiring a

Operator Electronic Signature: SANDRA MUSALLAM **Signed on:** SEP 23, 2025 04:00 PM

Name: OXY USA INCORPORATED

Title: Regulatory Engineer

Street Address: 5 GREENWAY PLAZA, SUITE 110

City: HOUSTON **State:** TX

Phone: (713) 366-5106

Email address: SANDRA_MUSALLAM@OXY.COM

Field

Representative Name:

Street Address:

City: **State:** **Zip:**

Phone:

Email address:

BLM Point of Contact

BLM POC Name: JONATHON W SHEPARD **BLM POC Title:** Petroleum Engineer

BLM POC Phone: 5752345972 **BLM POC Email Address:** jshepard@blm.gov

Disposition: Approved **Disposition Date:** 09/23/2025

Signature: Jonathon Shepard

CONFIDENTIAL

LEASE NUMBER	WELL NAME	API
CA NMNM105777379	JEFF SMITH MDP1 7_18 FED COM 174H	30-015-47241
CA NMNM139920	NIMITZ MDP1 12 FEDERAL COM 6H	30-015-44528
CA NMNM139920	NIMITZ MDP1 12 FEDERAL COM 7H	30-015-44529
CA NMNM137687	PALLADIUM MDP1 7-6 FEDERAL COM 5H	30-015-44294
CA NMNM137686	PALLADIUM MDP1 7-6 FEDERAL COM 4H	30-015-44295
CA NMNM106359464	NIMITZ MDP1 13_1 FEDERAL COM 175H	30-015-53777
CA NMNM106359464	NIMITZ MDP1 13_1 FEDERAL COM 313H	30-015-53778
CA NMNM 138992	NIMITZ MDP1 12 FEDERAL 1H	30-015-44526
CA NMNM 138992	NIMITZ MDP1 12 FEDERAL 2H	30-015-44580
CA NMNM 138995	NIMITZ MDP1 12 FEDERAL 9H	30-015-44581
CA NMNM 138996	NIMITZ MDP1 13 FEDERAL COM 2H	30-015-44498
CA NMNM 138997	NIMITZ MDP1 13 FEDERAL COM 3H	30-015-44525
CA NMNM137968	PALLADIUM MDP1 7-6 FEDERAL COM 1H	30-015-44298
CA NMNM137968	PALLADIUM MDP1 7-6 FEDERAL COM 2H	30-015-44299
CA NMNM137685	PALLADIUM MDP1 7-6 FEDERAL COM 3Y	30-015-44457
CA NMNM137601	PALLADIUM MDP1 7-6 FEDERAL COM 6H	30-015-44293
NMNM89172	PATTON MDP1 17 FEDERAL 1H	30-015-44459
NMNM89172	PATTON MDP1 17 FEDERAL 2H	30-015-44460
NMNM89172	PATTON MDP1 17 FEDERAL 3H	30-015-44496
NMNM89172	PATTON MDP1 17 FEDERAL 4H	30-015-44497
NMNM89172	PATTON MDP1 17 FEDERAL 5H	30-015-44444
NMNM89172	PATTON MDP1 17 FEDERAL 6H	30-015-44445
NMNM89172	PATTON MDP1 17 FEDERAL 176H	30-015-45079
NMNM89819	PATTON MDP1 18 FED 23H	30-015-44316
NMNM89819	PATTON MDP1 18 FED 33H	30-015-44338
NMNM89819	PATTON MDP1 18 FED 73H	30-015-44318
NMNM89819	PATTON MDP1 18 FEDERAL 1H	30-015-44317
NMNM89819	PATTON MDP1 18 FEDERAL 2H	30-015-44337
NMNM89819	PATTON MDP1 18 FEDERAL 3H	30-015-44333
NMNM89819	PATTON MDP1 18 FEDERAL 5H	30-015-44272
NMNM89819	PATTON MDP1 18 FEDERAL 7H	30-015-44273
CA NMNM138291	SUNRISE MDP1 8-5 FEDERAL COM 1H	30-015-44369
CA NMNM138291	SUNRISE MDP1 8-5 FEDERAL COM 2H	30-015-44395
CA NMNM138294	SUNRISE MDP1 8-5 FEDERAL COM 3H	30-015-44474
CA NMNM138295	SUNRISE MDP1 8-5 FEDERAL COM 4H	30-015-44475
CA NMNM138296	SUNRISE MDP1 8-5 FEDERAL COM 5H	30-015-44476
CA NMNM138296	SUNRISE MDP1 8-5 FEDERAL COM 6H	30-015-44473
CA NMNM106385694	CHUCK SMITH MDP1 8 17 FED COM 4H	30-015-54092
CA NMNM106385694	CHUCK SMITH MDP1 8 17 FED COM 5H	30-015-54050
CA NMNM106385694	CHUCK SMITH MDP1 8 17 FED COM 44H	30-015-54091
CA NMNM106385693	CHUCK SMITH MDP1 8 17 FED COM 21H	30-015-54093
CA NMNM106385693	CHUCK SMITH MDP1 8 17 FED COM 22H	30-015-54097

CA NMNM106385693	CHUCK SMITH MDP1 8 17 FED COM 23H	30-015-54260
CA NMNM106737144	NUGGET 6_31 FED COM 07H	30-015-56037
CA NMNM106737144	NUGGET 6_31 FED COM 13H	30-015-56038
CA NMNM106737144	NUGGET 6_31 FED COM 14H	30-015-56039
CA NMNM106737142	NUGGET 6_31 FED COM 11H	30-015-55865
CA NMNM106737142	NUGGET 6_31 FED COM 12H	30-015-56047
NMNM89819	PATTON MDP1 18 FEDERAL 6H	30-015-43854
NMNM89172	PATTON MDP1 17 FEDERAL 171H	30-015-44989
NMNM89172	PATTON MDP1 17 FEDERAL 172H	30-015-44990
NMNM89172	PATTON MDP1 17 FEDERAL 173H	30-015-44991
NMNM89172	PATTON MDP1 17 FEDERAL 174H	30-015-45077
NMNM89172	PATTON MDP1 17 FEDERAL 175H	30-015-45078
CA NMNM105766133	SUNRISE MDP1 8-5 Fed 171H	30-015-44930
CA NMNM105766133	SUNRISE MDP1 8-5 Fed 172H	30-015-44977
CA NMNM105766133	SUNRISE MDP1 8-5 Fed 173H	30-015-44931
CA NMNM105766134	SUNRISE MDP1 8-5 Fed 174H	30-015-45112
CA NMNM105766134	SUNRISE MDP1 8-5 Fed 175H	30-015-45152
CA NMNM105766134	SUNRISE MDP1 8-5 Fed 176H	30-015-45153
CA NMNM105777378	JEFF SMITH MDP1 7_18 FED COM 171H	30-015-47258
CA NMNM105777378	JEFF SMITH MDP1 7_18 FED COM 172H	30-015-47249
CA NMNM105777378	JEFF SMITH MDP1 7_18 FED COM 173H	30-015-47247
CA NMNM106359462	NIMITZ MDP1 13_1 FED COM 1H	30-015-48588
CA NMNM106359462	NIMITZ MDP1 13_1 FED COM 172H	30-015-48613
CA NMNM106359462	NIMITZ MDP1 13_1 FED COM 173H	30-015-48589
CA NMNM106359462	NIMITZ MDP1 13_1 FED COM 312H	30-015-48590
CA NMNM106359460	NIMITZ MDP1 13_1 FED COM 171H	30-015-48578
CA NMNM106359460	NIMITZ MDP1 13_1 FED COM 311H	30-015-48586
CA NMNM106744570	CHUCK SMITH MDP1 8 17 FED COM 1H	30-015-54261
CA NMNM106744570	CHUCK SMITH MDP1 8 17 FED COM 2H	30-015-54049
CA NMNM106744570	CHUCK SMITH MDP1 8 17 FED COM 31H	30-015-55468
CA NMNM106744570	CHUCK SMITH MDP1 8 17 FED COM 32H	30-015-55469
CA NMNM106392073 PENDING	CHUCK SMITH MDP1 8 17 FED COM 3H	30-015-54096
CA NMNM106392073 PENDING	CHUCK SMITH MDP1 8 17 FED COM 24H	30-015-54047
CA NMNM106392073 PENDING	CHUCK SMITH MDP1 8 17 FED COM 25H	30-015-54094
CA NMNM106392073 PENDING	CHUCK SMITH MDP1 8 17 FED COM 26H	30-015-54095
NMNM82896	GILA 12 FEDERAL 2H	30-015-36401
NMNM82896	NIMITZ 12 FEDERAL 3H	30-015-41011
NMNM82896	NIMITZ 12 FEDERAL 4H	30-015-41506
NMNM82896	NIMITZ 12 FEDERAL 5H	30-015-41657

SURFACE LOCATION	Pool	POOL CODE	
N-06-24S-31E	PURPLE SAGE;WOLFCAMP (GAS)	98220	ADDING
P-12-24S-30E	COTTON DRAW;BONE SPRING	13367	ADDING
P-12-24S-30E	COTTON DRAW;BONE SPRING	13367	ADDING
P-07-24S-31E	COTTON DRAW;BONE SPRING	13367	ADDING
P-07-24S-31E	COTTON DRAW;BONE SPRING	13367	
P-13-24S-30E	PURPLE SAGE;WOLFCAMP (GAS)	98220	
P-13-24S-30E	PURPLE SAGE;WOLFCAMP (GAS)	98220	
M-12-24S-30E	COTTON DRAW;BONE SPRING	13367	
C-13-24S-30E	COTTON DRAW;BONE SPRING	13367	
C-13-24S-30E	COTTON DRAW;BONE SPRING	13367	
P-12-24S-30E	COTTON DRAW;BONE SPRING	13367	
M-07-24S-31E	COTTON DRAW;BONE SPRING	13367	
M-07-24S-31E	COTTON DRAW;BONE SPRING	13367	
C-18-24S-31E	COTTON DRAW;BONE SPRING	13367	
C-18-24S-31E	COTTON DRAW;BONE SPRING	13367	
M-08-24S-31E	COTTON DRAW;BONE SPRING	13367	
N-08-24S-31E	COTTON DRAW;BONE SPRING	13367	
N-08-24S-31E	COTTON DRAW;BONE SPRING	13367	
N-08-24S-31E	COTTON DRAW;BONE SPRING	13367	
O-08-24S-31E	COTTON DRAW;BONE SPRING	13367	
P-08-24S-31E	COTTON DRAW;BONE SPRING	13367	
B-18-24S-31E	COTTON DRAW;BONE SPRING	13367	
A-17-24S-31E	COTTON DRAW;BONE SPRING	13367	
B-18-24S-31E	COTTON DRAW;BONE SPRING	13367	
B-18-24S-31E	COTTON DRAW;BONE SPRING	13367	
M-07-24S-31E	COTTON DRAW;BONE SPRING	13367	
C-18-24S-31E	COTTON DRAW;BONE SPRING	13367	
C-18-24S-31E	COTTON DRAW;BONE SPRING	13367	
A-18-24S-31E	COTTON DRAW;BONE SPRING	13367	
A-18-24S-31E	COTTON DRAW;BONE SPRING	13367	
M-18-24S-31E	COTTON DRAW;BONE SPRING	13367	
M-08-24S-31E	COTTON DRAW;BONE SPRING	13367	
N-08-24S-31E	COTTON DRAW;BONE SPRING	13367	
N-08-24S-31E	COTTON DRAW;BONE SPRING	13367	
N-08-24S-31E	COTTON DRAW;BONE SPRING	13367	
N-08-24S-31E	COTTON DRAW;BONE SPRING	13367	
N-08-24S-31E	COTTON DRAW;BONE SPRING	13367	
B-08-24S-31E	COTTON DRAW;BONE SPRING	13367	
B-08-24S-31E	COTTON DRAW;BONE SPRING	13367	
O-05-24S-31E	COTTON DRAW;BONE SPRING	13367	
M-05-24S-31E	COTTON DRAW;BONE SPRING	13367	
N-08-24S-31E	COTTON DRAW;BONE SPRING	13367	

N-05-24S-31E	COTTON DRAW;BONE SPRING	13367
P-06-24S-31E	COTTON DRAW;BONE SPRING	13367
P-06-24S-31E	COTTON DRAW;BONE SPRING	13367
P-06-24S-31E	COTTON DRAW;BONE SPRING	13367
C-07-24S-31E	COTTON DRAW;BONE SPRING	13367
C-07-24S-31E	COTTON DRAW;BONE SPRING	13367
A-18-24S-31E	PURPLE SAGE;WOLFCAMP (GAS)	98220
C-17-24S-31E	PURPLE SAGE;WOLFCAMP (GAS)	98220
C-17-24S-31E	PURPLE SAGE;WOLFCAMP (GAS)	98220
C-17-24S-31E	PURPLE SAGE;WOLFCAMP (GAS)	98220
B-17-24S-31E	PURPLE SAGE;WOLFCAMP (GAS)	98220
B-17-24S-31E	PURPLE SAGE;WOLFCAMP (GAS)	98220
C-17-24S-31E	PURPLE SAGE;WOLFCAMP (GAS)	98220
C-17-24S-31E	PURPLE SAGE;WOLFCAMP (GAS)	98220
C-17-24S-31E	PURPLE SAGE;WOLFCAMP (GAS)	98220
B-17-24S-31E	PURPLE SAGE;WOLFCAMP (GAS)	98220
B-17-24S-31E	PURPLE SAGE;WOLFCAMP (GAS)	98220
A-17-24S-31E	PURPLE SAGE;WOLFCAMP (GAS)	98220
M-06-24S-31E	PURPLE SAGE;WOLFCAMP (GAS)	98220
M-06-24S-31E	PURPLE SAGE;WOLFCAMP (GAS)	98220
N-06-24S-31E	PURPLE SAGE;WOLFCAMP (GAS)	98220
O-13-24S-30E	PURPLE SAGE;WOLFCAMP (GAS)	98220
M-13-24S-30E	PURPLE SAGE;WOLFCAMP (GAS)	98220
O-13-24S-30E	PURPLE SAGE;WOLFCAMP (GAS)	98220
O-13-24S-30E	PURPLE SAGE;WOLFCAMP (GAS)	98220
M-13-24S-30E	PURPLE SAGE;WOLFCAMP (GAS)	98220
M-13-24S-30E	PURPLE SAGE;WOLFCAMP (GAS)	98220
C-8-24S-31E	PURPLE SAGE;WOLFCAMP (GAS)	98220
C-8-24S-31E	PURPLE SAGE;WOLFCAMP (GAS)	98220
M-5-24S-31E	PURPLE SAGE;WOLFCAMP (GAS)	98220
M-5-24S-31E	PURPLE SAGE;WOLFCAMP (GAS)	98220
C-8-24S-31E	PURPLE SAGE;WOLFCAMP (GAS)	98220
O-05-24S-31E	PURPLE SAGE;WOLFCAMP (GAS)	98220
O-05-24S-31E	PURPLE SAGE;WOLFCAMP (GAS)	98220
O-05-24S-31E	PURPLE SAGE;WOLFCAMP (GAS)	98220
O-12-24S-30E	POKER LAKE;DELAWARE, NORTHWEST	96046
B-12-24S-30E	POKER LAKE;DELAWARE, NORTHWEST	96046
N-12-24S-30E	POKER LAKE;DELAWARE, NORTHWEST	96046
M-12-24S-30E	POKER LAKE;DELAWARE, NORTHWEST	96046

100

STATE OF NEW MEXICO
ENERGY, MINERALS AND NATURAL RESOURCES DEPARTMENT
OIL CONSERVATION DIVISION

APPLICATION FOR SURFACE COMMINGLING
SUBMITTED BY OXY USA, INC **ORDER NO. PLC-898-D**

ORDER

The Director of the New Mexico Oil Conservation Division ("OCD"), having considered the application and the recommendation of the OCD Engineering Bureau, issues the following Order.

FINDINGS OF FACT

1. Oxy USA, Inc. ("Applicant") submitted a complete application to surface commingle the oil production from the pools, leases, and wells as described in Exhibit A ("Application").
2. Applicant proposed a method to allocate the oil production to the pools, leases, and wells to be commingled.
3. Applicant provided notice of the Application to all persons owning an interest in the oil production to be commingled, including the owners of royalty and overriding royalty interests, regardless of whether they have a right or option to take their interests in kind, and those persons either submitted a written waiver or did not file an objection to the Application.
4. Applicant provided notice of the Application to the Bureau of Land Management ("BLM") or New Mexico State Land Office ("NMSLO"), as applicable.
5. Applicant certified the commingling of oil production from the pools, leases, and wells will not in reasonable probability reduce the value of the oil production to less than if it had remained segregated.
6. Applicant in the notice for the Application stated that it sought authorization to prospectively include additional pools, leases, and wells in accordance with 19.15.12.10 C.(4)(g) NMAC.
7. Applicant stated that it sought authorization to surface commingle and off-lease measure, as applicable, oil production from wells which have not yet been approved to be drilled, but will produce from a pool and lease as described in Exhibit A.
8. Applicant submitted or intends to submit one or more proposed communitization agreement(s) ("Proposed Agreement(s)") to the BLM or NMSLO, as applicable, identifying the acreage of each lease to be consolidated into a single pooled area ("CA Pooled Area"), as described in Exhibit A.
9. This Order is associated with Order PLC-749-I which authorizes in-full or in-part the commingling of Gas production from the pools, leases, and wells as described in Exhibit A.

CONCLUSIONS OF LAW

10. OCD has jurisdiction to issue this Order pursuant to the Oil and Gas Act, NMSA 1978, §§ 70-2-6, 70-2-11, 70-2-12, 70-2-16, and 70-2-17, 19.15.12. NMAC, and 19.15.23. NMAC.

11. Applicant satisfied the notice requirements for the Application in accordance with 19.15.12.10 A.(2) NMAC, 19.15.12.10 C.(4)(c) NMAC, and 19.15.12.10 C.(4)(e) NMAC, as applicable.

12. Applicant satisfied the notice requirements for the Application in accordance with 19.15.23.9 A.(5) NMAC and 19.15.23.9 A.(6) NMAC, as applicable.

13. Applicant's proposed method of allocation, as modified herein, complies with 19.15.12.10 B.(1) NMAC or 19.15.12.10 C.(1) NMAC, as applicable.

14. Commingling of oil production from state, federal, or tribal leases shall not commence until approved by the BLM or NMSLO, as applicable, in accordance with 19.15.12.10 B.(3) NMAC and 19.15.12.10 C.(4)(h) NMAC.

15. Applicant satisfied the notice requirements for the subsequent addition of pools, leases, and wells in the notice for the Application, in accordance with 19.15.12.10 C.(4)(g) NMAC. Subsequent additions of pools, leases, and wells within Applicant's defined parameters, as modified herein, will not, in reasonable probability, reduce the commingled production's value or otherwise adversely affect the interest owners in the production to be added.

16. By granting the Application with the conditions specified below, this Order prevents waste and protects correlative rights, public health, and the environment.

ORDER

1. Applicant is authorized to surface commingle oil production from the pools, leases, and wells as described in Exhibit A.

   Applicant is authorized to store and measure oil production off-lease from the pools, leases, and wells as described in Exhibit A at a central tank battery or gas title transfer meter described in Exhibit A.

   Applicant is authorized to surface commingle oil production from wells not included in Exhibit A but that produce from a pool and lease as described in Exhibit A.

   Applicant is authorized to store and measure oil production off-lease from wells not included in Exhibit A but that produce from a pool and lease as described in Exhibit A at a central tank battery or gas title transfer meter described in Exhibit A.

2. This Order supersedes Order PLC-898, PLC-898-A, PLC-898-B, CTB-1110, PLC-552 (Partial) & PLC-454.

3. For each CA Pooled Area described in Exhibit A, Applicant shall submit a Proposed Agreement to the BLM or NMSLO, as applicable, prior to commencing oil production. If Applicant fails to submit the Proposed Agreement, this Order shall terminate on the following day.

No later than sixty (60) days after the BLM or NMSLO approves or denies a Proposed Agreement, Applicant shall submit a Form C-103 to OCD with a copy of the decision and a description of the approved lands, as applicable. If Applicant withdraws or the BLM or NMSLO denies a Proposed Agreement, this Order shall terminate on the date of such action, and Applicant shall cease commingling the production from the CA Pooled Area. If the BLM or NMSLO approves but modifies the Proposed Agreement(s), Applicant shall comply with the approved Agreement(s), and no later than sixty (60) days after such decision, Applicant shall submit a new surface commingling application to OCD to conform this Order with the approved Agreement(s) if the formation or dedicated lands are modified or if a modification is made that will affect this Order. If Applicant fails to submit the new surface commingling application or OCD denies the new surface commingling application, this Order shall terminate on the date of such action.

Applicant shall allocate the oil production to each lease within a CA Pooled Area in proportion to the acreage that each lease bears to the entire acreage of the CA Pooled Area until the Proposed Agreement which includes the CA Pooled Area is approved. After the Proposed Agreement is approved, the oil production from the CA Pooled Area shall be allocated as required by the BLM's or NMSLO's, as applicable, approval of the Agreement, including any production that had been allocated previously in accordance with this Order.

4. The allocation of oil production to wells not included in Exhibit A but that produce from a pool and lease as described in Exhibit A shall be determined in the same manner as to wells identified in Exhibit A that produce from that pool and lease, provided that if more than one allocation method is being used or if there are no wells identified in Exhibit A that produce from the pool and lease, then allocation of oil production to each well not included in Exhibit A shall be determined by OCD prior to commingling production from it with the production from another well.

5. The allocation of oil production shall be based on the production life of each well as measured for three periods: (a) the initial production period shall be measured from the first production until the earlier of either the peak production rate or thirty (30) days after the first production; (b) the plateau period shall be measured from the end of the initial production period to the peak decline rate; and (c) the decline period shall be measured from the end of the plateau period until the well is plugged and abandoned.

   During the initial production period, the oil production for each well identified in Exhibit A shall be allocated using a production curve calculated from a minimum of ten (10) well tests per month, except that any day in which a well test cannot achieve an accurate result due to a temporary change in oil production shall not be included in the computation of time determining the well test schedule. The production curve shall be calculated by interpolating daily production for each day using the known daily production obtained by well tests and shall use a method of interpolation that is at minimum as accurate as maintaining a constant rate of change for each day's production between the known daily production values.

During the plateau period, the oil production for each well identified in Exhibit A shall be allocated using a minimum of three (3) well tests per month.

During the decline period, the oil production for each well identified in Exhibit A shall be allocated as follows: (a) a minimum of three (3) well tests per month when the decline rate is greater than twenty-two percent (22%) per month; (b) a minimum of two (2) well tests per month when the decline rate is between twenty-two percent (22%) and ten percent (10%) per month; and (c) a minimum of one (1) well test per month when the decline rate is less than ten percent (10%) per month.

Upon OCD's request, Applicant shall submit a Form C-103 to the OCD Engineering Bureau that contains the decline rate curve and other relevant information demonstrating the production life of a well.

Applicant shall conduct a well test by separating and metering the oil production from that well for either (a) a minimum of twenty-four (24) consecutive hours; or (b) a combination of nonconsecutive periods that meet the following conditions: (i) each period shall be a minimum of six (6) hours; and (ii) the total duration of the nonconsecutive periods shall be a minimum of eighteen (18) hours.

The well test requirements of this Order shall be suspended for any well shut-in for a period that continues for more than fifteen (15) days until the well commences production.

6. Applicant shall measure and market the commingled oil at a central tank battery described in Exhibit A in accordance with this Order and 19.15.18.15. NMAC or 19.15.23.8. NMAC.

7. Applicant shall calibrate the meters used to measure or allocate oil production in accordance with 19.15.12.10 C.(2) NMAC.

8. If the commingling of oil production from any pool, lease, or well reduces the value of the commingled oil production to less than if it had remained segregated, no later than sixty (60) days after the decrease in value has occurred Applicant shall submit a new surface commingling application to OCD to amend this Order to remove the pool, lease, or well whose oil production caused the decrease in value. If Applicant fails to submit a new application, this Order shall terminate on the following day, and if OCD denies the application, this Order shall terminate on the date of such action.

9. Applicant may submit an application to amend this Order to add pools, leases, and subsequently drilled wells with spacing units adjacent to or within the tracts commingled by this Order by submitting a Form C-107-B in accordance with 19.15.12.10 C.(4)(g) NMAC, provided the pools, leases, and subsequently drilled wells are within the identified parameters included in the Application.

10. If a well is not included in Exhibit A but produces from a pool and lease as described in Exhibit A, then Applicant shall submit Forms C-102 and C-103 to the OCD Engineering Bureau after the well has been approved to be drilled and prior to off-lease measuring or commingling oil or gas production from it with the production from another well. The Form

C-103 shall reference this Order and identify the well, proposed method to determine the allocation of oil production to it, and the location(s) that commingling of its production will occur.

11. Applicant shall not commence commingling oil or gas production from state, federal, or tribal leases until approved by the BLM or NMSLO, as applicable.

12. If OCD determines that Applicant has failed to comply with any provision of this Order, OCD may take any action authorized by the Oil and Gas Act or the New Mexico Administrative Code (NMAC).

13. OCD retains jurisdiction of this matter and reserves the right to modify or revoke this Order as it deems necessary.

STATE OF NEW MEXICO
OIL CONSERVATION DIVISION

Albert Chang

DATE: 1/6/2026

ALBERT C. S. CHANG
DIRECTOR

State of New Mexico
Energy, Minerals and Natural Resources Department

Exhibit A

Order: PLC-898-D
Operator: Oxy USA, Inc. (16696)
Central Tank Battery: Sand Dunes South Corridor Facility Train 1 (Oil)
Central Tank Battery Location: UL B, Section 18, Township 24 South, Range 31 East
Gas Title Transfer Meter Location:

Pools

Pool Name	Pool Code
COTTON DRAW; BONE SPRING	13367
POKER LAKE; DELAWARE, NORTHWEST	96046
PURPLE SAGE; WOLFCAMP (GAS)	98220

Leases as defined in 19.15.12.7(C) NMAC

Lease	UL or Q/Q	S-T-R
BLM Lease NMNM 105365475 (082896)	All minus I	12-24S-30E
	A B C D G H I	13-24S-30E
BLM Lease NMNM 105507759 (097133)	W/2, W/2 E/2	1-24S-30E
BLM Lease NMNM 105365475 (082896)	W/2, W/2 E/2	12-24S-30E
	B C D G	13-24S-30E
BLM Lease NMNM 120987	E F J K L M N O	13-24S-30E
BLM Lease NMNM 105451111 (089172)	All	17-24S-31E
BLM Lease NMNM 105368185 (089819)	All	18-24S-31E
CA Bone Spring NMNM 105690045 (137686)	W2E2	06-24S-31E
	W2E2	07-24S-31E
CA Wolfcamp NMNM 106359464	E2E2	01-24S-30E
	E2E2	12-24S-30E
	E2E2	13-24S-30E
CA Bone Spring NMNM 105692171 (138992)	W/2 W/2	1-24S-30E
	W/2 W/2	12-24S-30E
CA Bone Spring NMNM 15692173 (138995)	E/2 W/2	1-24S-30E
	E/2 W/2	12-24S-30E
CA Bone Spring NMNM 105692176 (138997)	E/2 E/2	13-24S-30E
CA Bone Spring NMNM 105692175 (138996)	W/2 E/2	13-24S-30E
CA Bone Spring NMNM 105690046 (137687)	E/2	6-24S-31E
	E/2	7-24S-31E
CA Bone Spring NMNM 105677981 (137968)	W/2 W/2	6-24S-31E
	W/2 W/2	7-24S-31E
CA Bone Spring NMNM 105690647 (138291)	W/2 W/2	5-24S-31E
	W/2 W/2	8-24S-31E
CA Bone Spring NMNM 105690649 (138294)	E/2 W/2	5-24S-31E
	E/2 W/2	8-24S-31E
CA Bone Spring NMNM 105690650 (138295)	W/2 E/2	5-24S-31E
	W/2 E/2	8-24S-31E
CA Bone Spring NMNM 105690651 (138296)	E/2 E/2	5-24S-31E
	E/2 E/2	8-24S-31E

Released to Imaging: 1/8/2026 3:18:06 PM

CA Bone Spring NMNM 105690044 (137685)	E/2 W/2 E/2 W/2	6-24S-31E 7-24S-31E
BLM Lease NMNM 105477845 (104730)	All minus M	5-24S-31E
BLM Lease NMNM 105517533 (142143)	W/2 minus M	8-24S-31E
BLM Lease NMNM 105517583 (142692)	M	8-24S-31E
BLM Lease NMNM 105517585 (142696)	E/2	8-24S-31E
BLM Lease NMNM 105365775 (057273)	W/2	7-24S-31E
BLM Lease NMNM 105465259 (082904)	All	6-24S-31E
CA Bone Spring NMNM 105772683	E/2 W/2, W/2 E/2 W/2 E/2, SE/4 SW/4	6-24S-31E 31-23S-31E
CA Bone Spring NMNM 105773185	W/2 W/2 W/2 W/2	6-24S-31E 31-23S-31E
PROPOSED CA Bone Spring NMNM 106715285	E/2 E/2 E/2 E/2	6-24S-31E 31-23S-31E
BLM Lease NMNM 105443917 (0544986B)	NE/4 SE/4	31-23S-31E
BLM Lease NMNM 105320368 (0546732A)	All Minus I	31-23S-31E
CA Wolfcamp NMNM 105777379	E/2 E/2	07-24S-31E 18-24S-31E

Wells

Well API	Well Name	UL or Q/Q	S-T-R	Pool
30-015-47258	Jeff Smith MDP1 7 18 Federal Com #171H	W/2 W/2	7-24S-31E 18-24S-31E	98220
30-015-47249	Jeff Smith MDP1 7 18 Federal Com #172H	W/2 W/2	7-24S-31E 18-24S-31E	98220
30-015-47247	Jeff Smith MDP1 7 18 Federal Com #173H	W/2 W/2	7-24S-31E 18-24S-31E	98220
30-015-44526	Nimitz MDP1 12 Federal Com #1H	W/2 W/2 W/2 W/2	1-24S-30E 12-24S-30E	13367
30-015-44580	Nimitz MDP1 12 Federal Com #2H	W/2 W/2 W/2 W/2	1-24S-30E 12-24S-30E	13367
30-015-44581	Nimitz MDP1 12 Federal Com #9H	E/2 W/2 E/2 W/2	1-24S-30E 12-24S-30E	13367
30-015-44498	Nimitz MDP1 13 Federal Com #2H	W/2 E/2	13-24S-30E	13367
30-015-44525	Nimitz MDP1 13 Federal Com #3H	E/2 E/2	13-24S-30E	13367
30-015-44298	Palladium MDP1 7 6 Federal Com #1H	W/2 W/2 W/2 W/2	6-24S-31E 7-24S-31E	13367
30-015-44299	Palladium MDP1 7 6 Federal Com #2H	W/2 W/2 W/2 W/2	6-24S-31E 7-24S-31E	13367
30-015-44457	Palladium MDP1 7 6 Federal Com #3Y	E/2 W/2 E/2 W/2	6-24S-31E 7-24S-31E	13367
30-015-44293	Palladium MDP1 7 6 Federal Com #6H	E/2 E/2 E/2 E/2	6-24S-31E 7-24S-31E	13367
30-015-44459	Patton MDP1 17 Federal #1H	W/2 W/2	17-24S-31E	13367
30-015-44460	Patton MDP1 17 Federal #2H	W/2 W/2	17-24S-31E	13367
30-015-44496	Patton MDP1 17 Federal #3H	E/2 W/2	17-24S-31E	13367
30-015-44497	Patton MDP1 17 Federal #4H	W/2 E/2	17-24S-31E	13367
30-015-44444	Patton MDP1 17 Federal #5H	E/2 E/2	17-24S-31E	13367
30-015-44445	Patton MDP1 17 Federal #6H	E/2 E/2	17-24S-31E	13367

30-015-44316	Patton MDP1 18 Federal #23H	W/2 E/2	18-24S-31E	13367
30-015-44338	Patton MDP1 18 Federal #33H	W/2 E/2	18-24S-31E	13367
30-015-44318	Patton MDP1 18 Federal #73H	W/2 E/2	18-24S-31E	13367
30-015-44317	Patton MDP1 18 Federal #1H	W/2 W/2	18-24S-31E	13367
30-015-44337	Patton MDP1 18 Federal #2H	E/2 W/2	18-24S-31E	13367
30-015-44333	Patton MDP1 18 Federal #3H	E/2 W/2	18-24S-31E	13367
30-015-44272	Patton MDP1 18 Federal #5H	E/2 E/2	18-24S-31E	13367
30-015-44273	Patton MDP1 18 Federal #7H	E/2 E/2	18-24S-31E	13367
30-015-44369	Sunrise MDP1 8 5 Federal Com #1H	W/2 W/2 W/2 W/2	5-24S-31E 8-24S-31E	13367
30-015-44395	Sunrise MDP1 8 5 Federal Com #2H	W/2 W/2 W/2 W/2	5-24S-31E 8-24S-31E	13367
30-015-44474	Sunrise MDP1 8 5 Federal Com #3H	E/2 W/2 E/2 W/2	5-24S-31E 8-24S-31E	13367
30-015-44475	Sunrise MDP1 8 5 Federal Com #4H	W/2 E/2 W/2 E/2	5-24S-31E 8-24S-31E	13367
30-015-44476	Sunrise MDP1 8 5 Federal Com #5H	E/2 E/2 E/2 E/2	5-24S-31E 8-24S-31E	13367
30-015-44473	Sunrise MDP1 8 5 Federal Com #6H	E/2 E/2 E/2 E/2	5-24S-31E 8-24S-31E	13367
30-015-43854	Patton MDP1 18 Federal #6H	E/2 E/2	18-24S-31E	98220
30-015-44989	Patton MDP1 17 Federal #171H	W/2	17-24S-31E	98220
30-015-44990	Patton MDP1 17 Federal #172H	W/2	17-24S-31E	98220
30-015-44991	Patton MDP1 17 Federal #173H	W/2	17-24S-31E	98220
30-015-45077	Patton MDP1 17 Federal #174H	E/2	17-24S-31E	98220
30-015-45078	Patton MDP1 17 Federal #175H	E/2	17-24S-31E	98220
30-015-45079	Patton MDP1 17 Federal #176H	E/2 E/2	17-24S-31E	98220
30-015-44930	Sunrise MDP1 8 5 Federal Com #171H	W/2 W/2	5-24S-31E 8-24S-31E	98220
30-015-44977	Sunrise MDP1 8 5 Federal Com #172H	W/2 W/2	5-24S-31E 8-24S-31E	98220
30-015-44931	Sunrise MDP1 8 5 Federal Com #173H	W/2 W/2	5-24S-31E 8-24S-31E	98220
30-015-45112	Sunrise MDP1 8 5 Federal Com #174H	E/2 E/2	5-24S-31E 8-24S-31E	98220
30-015-45152	Sunrise MDP1 8 5 Federal Com #175H	E/2 E/2	5-24S-31E 8-24S-31E	98220
30-015-45153	Sunrise MDP1 8 5 Federal Com #176H	E/2 E/2	5-24S-31E 8-24S-31E	98220
30-015-48588	Nimitz MDP1 13 1 Federal Com #1H	E/2 W/2, W/2 E/2 E/2 W/2, W/2 E/2 E/2 W/2, W/2 E/2	1-24S-30E 12-24S-30E 13-24S-30E	98220
30-015-48578	Nimitz MDP1 13 1 Federal Com #171H	W/2 W/2 W/2 W/2 W/2 W/2	1-24S-30E 12-24S-30E 13-24S-30E	98220
30-015-48613	Nimitz MDP1 13 1 Federal Com #172H	E/2 W/2, W/2 E/2 E/2 W/2, W/2 E/2 E/2 W/2, W/2 E/2	1-24S-30E 12-24S-30E 13-24S-30E	98220

30-015-48589	Nimitz MDP1 13 1 Federal Com #173H	E/2 W/2, W/2 E/2 E/2 W/2, W/2 E/2 E/2 W/2, W/2 E/2	1-24S-30E 12-24S-30E 13-24S-30E	98220
30-015-48586	Nimitz MDP1 13 1 Federal Com #311H	W/2 W/2 W/2 W/2 W/2 W/2	1-24S-30E 12-24S-30E 13-24S-30E	98220
30-015-48590	Nimitz MDP1 13 1 Federal Com #312H	E/2 W/2, W/2 E/2 E/2 W/2, W/2 E/2 E/2 W/2, W/2 E/2	1-24S-30E 12-24S-30E 13-24S-30E	98220
30-015-36401	Gila 12 Federal #2H	M N O	12-24S-30E	96046
30-015-41011	Nimitz 12 Federal #3H	W/2 E/2	12-24S-30E	96046
30-015-41506	Nimitz 12 Federal #4H	E/2 W/2	12-24S-30E	96046
30-015-41657	Nimitz 12 Federal #5H	W/2 W/2	12-24S-30E	96046
30-015-54092	Chuck Smith MDP1 8 17 Federal Com #4H	E/2 E/2	8-24S-31E 17-24S-31E	13367
30-015-54050	Chuck Smith MDP1 8 17 Federal Com #5H	E/2 E/2	8-24S-31E 17-24S-31E	13367
30-015-54093	Chuck Smith MDP1 8 17 Federal Com #21H	W/2 W/2	8-24S-31E 17-24S-31E	13367
30-015-54097	Chuck Smith MDP1 8 17 Federal Com #22H	W/2 W/2	8-24S-31E 17-24S-31E	13367
30-015-54260	Chuck Smith MDP1 8 17 Federal Com #23H	W/2 W/2	8-24S-31E 17-24S-31E	13367
30-015-54091	Chuck Smith MDP1 8 17 Federal Com #44H	E/2 E/2	8-24S-31E 17-24S-31E	13367
30-015-54049	Chuck Smith MDP1 8 17 Federal Com #2H	W/2 W/2	8-24S-31E 17-24S-31E	98220
30-015-54096	Chuck Smith MDP1 8 17 Federal Com #3H	E/2 E/2	8-24S-31E 17-24S-31E	98220
30-015-54047	Chuck Smith MDP1 8 17 Federal Com #24H	E/2 E/2	8-24S-31E 17-24S-31E	98220
30-015-54094	Chuck Smith MDP1 8 17 Federal Com #25H	E/2 E/2	8-24S-31E 17-24S-31E	98220
30-015-54095	Chuck Smith MDP1 8 17 Federal Com #26H	E/2 E/2	8-24S-31E 17-24S-31E	98220
30-015-55469	Chuck Smith MDP1 8 17 Federal Com #32H	W/2 W/2	8-24S-31E 17-24S-31E	98220
30-015-55468	Chuck Smith MDP1 8 17 Federal Com #31H	W/2 W/2	8-24S-31E 17-24S-31E	98220
30-015-54261	Chuck Smith MDP1 8 17 Federal Com #1H	W/2 W/2	8-24S-31E 17-24S-31E	98220
30-015-56037	Nugget 6 31 Federal Com #7H	E/2 E/2	6-24S-31E 31-23S-31E	13367
30-015-55865	Nugget 6 31 Federal Com #11H	W/2 W/2	6-24S-31E 31-23S-31E	13367
30-015-56047	Nugget 6 31 Federal Com #12H	W/2 W/2	6-24S-31E 31-23S-31E	13367
30-015-56038	Nugget 6 31 Federal Com #13H	E/2 E/2	6-24S-31E 31-23S-31E	13367

30-015-56039	Nugget 6 31 Federal Com #14H	E/2 E/2	6-24S-31E 31-23S-31E	13367
30-015-44295	Palladium MDP1 7 6 Federal Com #4H	W/2 E/2 W/2 E/2	06-24S-31E 07-24S-31E	13367
30-015-53777	Nimitz MDP1 13 1 Federal Com #175H	E/2 E/2 E/2 E/2 E/2 E/2	01-24S-30E 12-24S-30E 13-24S-30E	98220
30-015-53778	Nimitz MDP1 13 1 Federal Com #313H	E/2 E/2 E/2 E/2 E/2 E/2	01-24S-30E 12-24S-30E 13-24S-30E	98220
30-015-44528	Nimitz MDP1 12 Federal Com #6H	E/2 E/2	01-24S-30E 12-24S-30E	13367
30-015-44529	Nimitz MDP1 12 Federal Com #7H	E/2 E/2	01-24S-30E 12-24S-30E	13367
30-015-44294	Palladium MDP1 7 6 Federal Com #5H	E/2 E/2 E/2 E/2	06-24S-31E 07-24S-31E	13367
30-015-47241	Jeff Smith MDP1 7 18 Federal Com #174H	E/2 E/2	07-24S-31E 18-24S-31E	98220

Sante Fe Main Office
Phone: (505) 476-3441

General Information
Phone: (505) 629-6116

Online Phone Directory
https://www.emnrd.nm.gov/ocd/contact-us

State of New Mexico
Energy, Minerals and Natural Resources
Oil Conservation Division
1220 S. St Francis Dr.
Santa Fe, NM 87505

CONDITIONS

Action 523279

CONDITIONS

Operator: OXY USA INC P.O. Box 4294 Houston, TX 772104294	OGRID: 16696
	Action Number: 523279
	Action Type: [C-107] Surface Commingle or Off-Lease (C-107B)

CONDITIONS

Created By	Condition	Condition Date
sarah.clelland	Please review the content of the order to ensure you are familiar with the authorities granted and any conditions of approval. If you have any questions regarding this matter, please email us at OCD.Engineer@emnrd.nm.gov.	1/8/2026