CASE 3202: Appli. of INTERNATIONAI
OIL & GAS for a waterflood project
in Eddy County, New Mexico.

CASE No.
3202

Application,
Transcripts,
Small Exhibits
ETC.

OIL CONSERVATION COMMISSION
P. O. BOX 2088
SANTA FE, NEW MEXICO

February 11, 1965

COPY

Mr. A. J. Losee
Losee & Stewart
Attorneys at Law
Post Office Box 239
Artesia, New Mexico

Dear Sir:

Enclosed herewith is Commission Order No. R-2369, entered in Case No. 3202, approving the International Oil & Gas Corporation Artesia Dunn B Waterflood Project.

Injection is to be through the nine authorized injection wells which, on conversion to water injection shall be pressure-tested to a minimum of 2000 psia. Should any casing string fail to withstand said pressure test, injection in that well shall be through tubing and packer. The Oil Conservation Commission's District Office at Artesia is to be notified, in advance, of the date and hour the pressure tests are to be commenced.

As to allowable, our calculations indicate that when all of the authorized injection wells have been placed on active injection, the maximum allowable which this project will be eligible to receive under the provisions of Rule 701-E-3 is 672 barrels per day.

Please report any error in this calculated maximum allowable immediately, both to the Santa Fe office of the Commission and the appropriate district proration office.

In order that the allowable assigned to the project may be kept current, and in order that the operator may fully benefit from

OIL CONSERVATION COMMISSION
P. O. BOX 2088
SANTA FE, NEW MEXICO



Mr. A. J. Losee
Losee & Stewart
Attorneys at Law
Post Office Box 239
Artesia, New Mexico
February 11, 1965

the allowable provisions of Rule 701, it behooves him to promptly notify both of the aforementioned Commission offices by letter of any change in the status of wells in the project area, i.e., when active injection commences, when additional injection or producing wells are drilled, when additional wells are acquired through purchase or unitization, when wells have received a response to water injection, etc.

Your cooperation in keeping the Commission so informed as to the status of the project and the wells therein will be appreciated.

Very truly yours,

A. L. PORTER, Jr.
Secretary-Director

ALP/DSN/ir

Enclosure

cc: Mr. Frank Irby
State Engineer Office
Santa Fe, New Mexico

Oil Conservation Commission
Hobbs, New Mexico
Artesia, New Mexico

BEFORE THE OIL CONSERVATION COMMISSION
OF THE STATE OF NEW MEXICO

IN THE MATTER OF THE HEARING
CALLED BY THE OIL CONSERVATION
COMMISSION OF NEW MEXICO FOR
THE PURPOSE OF CONSIDERING:

CASE No. 3202
Order No. R-2869

APPLICATION OF INTERNATIONAL OIL & GAS
CORPORATION FOR A WATERFLOOD PROJECT,
EDDY COUNTY, NEW MEXICO.

ORDER OF THE COMMISSION

BY THE COMMISSION:

This cause came on for hearing at 9 o'clock a.m. on January 27, 1965, at Santa Fe, New Mexico, before Examiner Elvis A. Utz.

NOW, on this 11th day of February, 1965, the Commission, a quorum being present, having considered the testimony, the record, and the recommendations of the Examiner, and being fully advised in the premises,

FINDS:

(1) That due public notice having been given as required by law, the Commission has jurisdiction of this cause and the subject matter thereof.

(2) That the applicant, International Oil & Gas Corporation, seeks permission to institute a waterflood project in the Artesia Pool by the injection of water into the Queen, Grayburg, and San Andres formations through nine injection wells in Sections 10 and 11, Township 18 South, Range 28 East, NMPM, Eddy County, New Mexico.

(3) That the wells in the project area are in an advanced state of depletion and should properly be classified as "stripper" wells.

(4) That the proposed waterflood project should result in the recovery of otherwise unrecoverable oil, thereby preventing waste.

(5) That the subject application should be approved and the project should be governed by the provisions of Rules 701, 702, and 703 of the Commission Rules and Regulations.

IT IS THEREFORE ORDERED:

(1) That the applicant, International Oil & Gas Corporation, is hereby authorized to institute a waterflood project in the Artesia Pool by the injection of water into the Queen, Grayburg, and San Andres formations through nine wells at the following-described locations in Eddy County, New Mexico:

TOWNSHIP 18 SOUTH, RANGE 28 EAST, NMPM

| WELLS | LOCATION | SECTION |
|---|---|---|
| International-Yates-Dunn "B" Federal | | |
| Well No. 13 | NE/4 NE/4 | 10 |
| Well No. 17 | NE/4 NW/4 | 10 |
| Well No. 15 | SW/4 NW/4 | 10 |
| Well No. 19 | SW/4 NE/4 | 10 |
| Well No. 24 | NE/4 SE/4 | 10 |
| Well No. 18 | NE/4 NW/4 | 11 |
| Well No. 21 | SW/4 NW/4 | 11 |
| Well No. 29 | SW/4 NE/4 | 11 |
| Well No. 30 (undrilled) | NE/4 SW/4 | 11 |

(2) That the subject waterflood project shall be governed by the provisions of Rules 701, 702, and 703 of the Commission Rules and Regulations.

(3) That monthly progress reports of the waterflood project herein authorized shall be submitted to the Commission in accordance with Rules 704 and 1120 of the Commission Rules and Regulations.

(4) That jurisdiction of this cause is retained for the entry of such further orders as the Commission may deem necessary.

DONE at Santa Fe, New Mexico, on the day and year hereinabove designated.

STATE OF NEW MEXICO
OIL CONSERVATION COMMISSION

Jack M Campbell
JACK M. CAMPBELL, Chairman

Guyton B. Hays
GUYTON B. HAYS, Member

A. L. Porter, Jr.
A. L. PORTER, Jr., Member & Secretary

esr

OIL CONSERVATION COMMISSION
P. O. BOX 2088
SANTA FE, NEW MEXICO

February 19, 1965

COPY

Mr. R. L. Stamets
Oil and Gas Inspector
Oil Conservation Commission
Drawer DD
Artesia, New Mexico

Re: Case No. 3202
Order No. R-2869

Dear Dick:

It will not be necessary to change the names of the wells or the order in the above case as these wells are operated by International Oil & Gas Corporation.

Very truly yours,

J. M. DURRETT, Jr.
Attorney

JMD/esr

# Memo

From

R. L. STAMETS
GEOLOGIST AND DEPUTY
OIL & GAS INSPECTOR

To Jim Durham

Order R-4867
Authorizes a waterflood
for International Oil
Gas Corp. However, the
wells involved are in the
name of International-
Texas. Will the name
have to corrected on the
order or will it OK to
let them go ahead and?

LAW OFFICES
LOSEE AND STEWART
CARPER BUILDING - P. O. DRAWER 239
ARTESIA, NEW MEXICO

A. J. LOSEE
EDWARD B. STEWART

AREA CODE 505
746-3508

January 18, 1965

Mr. Elvis A. Utz, Examiner
Oil Conservation Commission of New Mexico
P. O. Box 2088
Santa Fe, New Mexico

Re: Case No. 3202
Application of International Oil & Gas Corporation for a Waterflood Project in the Queen, Grayburg & San Andres Formations of the Artesia Field, Eddy County, New Mexico

Dear Mr. Utz:

Enclosed herewith you will please find three copies of the applications in the subject case with attached plat, copies of all available logs on the proposed injection wells, and the diagramatic sketch of the proposed injection wells.

With a carbon copy of this letter, we are furnishing Mr. Frank Irby with a copy of the application, and the above described attachments.

Very truly yours,

A. J. Losee

AJL/jc

Enclosures;

cc: State Engineer's Office
P. O. Box 1079
Santa Fe, New Mexico
ATTENTION: Mr. Frank Irby
( cc by certified mail )

Case 3202
Heard 1-27-65
Rec. 1-27-65

1. Grant International permission to initiate a waterflood & to convert 9 wells to water injection. These wells are listed on page 2 of application.
2. Operate under Rule 701.
3. Casing must be tested to 2000 # psi or injection must be made thru tubing and under a packer.

Elvis A. Utz

If water is brackish it shall be treated to prevent corrosion.

EAU

BEFORE THE OIL CONSERVATION COMMISSION

OF THE STATE OF NEW MEXICO

| | | |
|---|---|---|
| IN THE MATTER OF THE APPLICATION OF INTERNATIONAL OIL & GAS CORPORATION FOR A WATERFLOOD PROJECT IN THE QUEEN, GRAYBURG AND SAN ANDRES FORMATIONS OF THE ARTESIA FIELD, EDDY COUNTY, NEW MEXICO. | : | No. 3202 |

APPLICATION

COMES INTERNATIONAL OIL & GAS CORPORATION, by its attorneys, Losee and Stewart, and states:

1. That it is the operator and with Yates Petroleum Corporation the working interest owner of the Queen, Grayburg and San Andres formations underlying the Artesia Field, Eddy County, New Mexico, that is within the proposed project area covered by this application and described as follows:

Township 18 South, Range 28 East, N.M.P.M.

Section 10: N/2 and N/2 SE/4
Section 11: W/2 NE/4, NW/4 and N/2 SW/4

containing 720 acres, more or less.

2. There is attached hereto and by reference made a part hereof, a plat showing the location of the proposed injection wells and the location of all other wells and leases within a radius of one mile from the proposed injection wells and designating the formations from which said wells are producing.

3. That said wells have reached the advanced or "stripper" state of depletion and the applicant proposes to inject water into

the producing Queen, Grayburg and San Andres formations in sufficient quantities and under sufficient pressure to stimulate the production of oil from the producing wells in the project area.

4. That applicant proposes to inject water through the International-Yates-Dunn "B"-Federal wells at the following locations in Township 18 South, Range 28 East, N.M.P.M., Eddy County, New Mexico, to wit:

Well No. 13 in the NE/4 NE/4, Section 10
Well No. 17 in the NE/4 NW/4, Section 10
Well No. 15 in the SW/4 NW/4, Section 10
Well No. 19 in the SW/4 NE/4, Section 10
Well No. 24 in the NE/4 SE/4, Section 10
Well No. 18 in the NE/4 NW/4, Section 11
Well No. 21 in the SW/4 NW/4, Section 11
Well No. 29 in the SW/4 NE/4, Section 11
Undrilled Well in the NE/4 SW/4, Section 11

5. There is attached hereto, and by reference made a part hereof, copies of all available logs on the proposed injection wells.

6. There is attached hereto, and by reference made a part hereof, a diagramatic sketch of the proposed injection wells showing all casing strings, including diameters and setting depths, quantities used and tops of cement, perforated or open hope intervals, tubing strings, including diameters and setting depths, and the type and location of all packers.

7. That applicant proposes to contract for the purchase of water from Caprock Water Company or other similar commercial source.

8. That applicant proposes to inject water into each of the injection wells at a pressure of approximately 1200 psi

and at the rate of 300 barrels per day.

9. That applicant proposes to conduct said secondary recovery project in accordance with the waterflood allowable provisions of Rule 701 of the New Mexico Oil Conservation Commission.

10. That the approval of this secondary recovery project will be in the interest of conservation and will prevent waste and that correlative rights will be protected.

WHEREFORE, applicant prays that an order be entered authorizing the institution of the aforesaid waterflood project by the injection of water into the producing Queen, Grayburg and San Andres formations through the injection wells hereinabove described.

INTERNATIONAL OIL & GAS
CORPORATION

By: A. J. Losee

A. J. Losee of
Losee and Stewart
Attorneys at Law
P. O. Drawer 239
Artesia, New Mexico

CASE 3199: Application of Sinclair Oil & Gas Company for a non-standard gas proration unit, Lea County, New Mexico. Applicant, in the above-styled cause, seeks approval of a 240-acre non-standard gas proration unit comprising the NW/4 and the N/2 SW/4 of Section 20, Township 24 South, Range 37 East, Jalmat Gas Pool, Lea County, New Mexico, to be dedicated to its William H. Harrison "C" WN Well No. 3 located in Unit L of said Section 20.

CASE 3189: (Continued from the January 6, 1965, Examiner Hearing)
Application of Continental Oil Company for a dual completion, Rio Arriba County, New Mexico. Applicant, in the above-styled cause, seeks approval of the dual completion (conventional) of its Jicarilla Apache 30 Well No. 2 located in Unit C of Section 29, Township 25 North, Range 4 West, Rio Arriba County, New Mexico, to produce gas from the Chacra formation and oil from the Gallup formation through the casing-tubing annulus and tubing, respectively.

CASE 3200: Application of Cabot Corporation for salt water disposal, Lea County, New Mexico. Applicant, in the above-styled cause, seeks authority to dispose of produced salt water into the Wolfcamp formation through perforations from 9406 to 10,037 feet in its Lowe "G" Well No. 1 located in Unit O of Section 26, Township 12 South, Range 37 East, King Field, Lea County, New Mexico.

CASE 3201: Application of Union Texas Petroleum, Division Allied Chemical Corporation, for an exception to Rule 14(A) of the General Rules and Regulations for Prorated Gas Pools in Northwest New Mexico under Order No. R-1670, as amended. Applicant, in the above-styled cause, seeks an exception to the underproduction cancellation provisions of Rule 14(A) of Order No. R-1670 for its Johnson Federal No. 4 Well, located in the SW/4 NE/4 of Section 33, Township 31 North, Range 9 West, Blanco-Mesaverde Gas Pool, San Juan County, New Mexico, to permit said well to carry forward into the next gas proration period the unproduced allowable which was previously carried forward and to permit the same to be produced during the proration period beginning February, 1965, in addition to the allowable currently assigned to said well.

CASE 3202: Application of International Oil & Gas Corporation for a waterflood project, Eddy County, New Mexico. Applicant, in the above-styled cause, seeks authority to institute a waterflood project in the Artesia Pool by the injection of water into the Queen, Grayburg, and San Andres formations through 9 wells in Sections 10 and 11, Township 18 South, Range 28 East, Eddy County, New Mexico.

Docket No. 3-65

DOCKET: EXAMINER HEARING - WEDNESDAY - JANUARY 27, 1965

9 A.M. - OIL CONSERVATION COMMISSION CONFERENCE ROOM, STATE LAND OFFICE BUILDING, SANTA FE, NEW MEXICO

The following cases will be heard before Elvis A. Utz, Examiner, or Daniel S. Nutter, Alternate Examiner:

CASE 3193: Application of International Oil & Gas Corporation for a unit agreement, Eddy County, New Mexico. Applicant, in the above-styled cause, seeks approval of the High Lonesome Penrose Unit Area comprising 320 acres of State and Federal lands in Section 15, Township 16 South, Range 29 East, Eddy County, New Mexico.

CASE 3194: Application of International Oil & Gas Corporation for expansion of a waterflood project, Eddy County, New Mexico. Applicant, in the above-styled cause, seeks authority to expand its High Lonesome Waterflood Project by the conversion to water injection of three wells located in Units A, B, and J, Section 15, Township 16 South, Range 29 East, High Lonesome Pool, Eddy County, New Mexico.

CASE 3195: Application of H & M Oil Company, et al for a waterflood project, Eddy County, New Mexico. Applicants, H & M Oil Company, Kincaid & Watson, N. E. Salsich, Jr., and Kersey, seek authority to institute a waterflood project in the Square Lake Pool by the injection of water into the Grayburg and San Andres formations through six injection wells in Section 1, Township 17 South, Range 29 East and one injection well in Section 6, Township 17 South, Range 30 East, Eddy County, New Mexico.

CASE 3196: Application of Texas Pacific Oil Company for a non-standard gas proration unit, Lea County, New Mexico. Applicant, in the above-styled cause, seeks approval of a 320-acre non-standard gas proration unit comprising the N/2 of Section 8, Township 22 South, Range 36 East, Jalmat Gas Pool, Lea County, New Mexico, to be simultaneously dedicated to its State "A" A/c-2 Well No. 49 located in Unit C and to its State "A" A/c-2 Well No. 43 located in Unit H of said Section 8.

CASE 3197: Application of Texas Pacific Oil Company for a non-standard gas proration unit, Lea County, New Mexico. Applicant, in the above-styled cause, seeks approval of a 320-acre non-standard gas proration unit comprising the S/2 of Section 5, Township 22 South, Range 36 East, Jalmat Gas Pool, Lea County, New Mexico, to be simultaneously dedicated to its State "A" A/c-2 Well No. 41 located in Unit M and its State "A" A/c-2 Well No. 27 located in Unit P of said Section 5.

CASE 3198: Application of Texaco Inc. for an amendment of Order No. R-2758, San Juan County, New Mexico. Applicant, in the above-styled cause, seeks an amendment to Rule 6 of Order No. R-2758, which order promulgated special pool rules for the Tocito Dome Pennsylvanian "D" Pool, San Juan County, New Mexico. Applicant seeks a 160 acre proportional factor for said pool of 4.77 rather than a factor of 2.77 as previously established by the Commission.

BEFORE THE
NEW MEXICO OIL CONSERVATION COMMISSION
Santa Fe, New Mexico
January 27, 1965

EXAMINER HEARING

IN THE MATTER OF:

APPLICATION OF INTERNATIONAL OIL & GAS CORPORATION FOR A WATERFLOOD PROJECT, EDDY COUNTY, NEW MEXICO

Case No. 3202

BEFORE:

ELVIS A. UTZ

TRANSCRIPT OF HEARING

MR. UTZ: Case Number 3202.

MR. DURRETT: Application of International Oil & Gas Corporation for a waterflood project, Eddy County, New Mexico.

MR. LOSEE: A. J. Losee, appearing on behalf of International Oil & Gas Corporation. I have one witness, Mr. Appledorn.

MR. DURRETT: Let the record show that Mr. Appledorn was sworn in Case Number 3193, and is still under oath in this case.

MR. UTZ: Are there other appearances in this case? ... You may proceed.

* * *

C O N R A D A P P L E D O R N, the witness, having been duly sworn, was examined and testified as follows:

DIRECT EXAMINATION

BY MR. LOSEE:

Q State your name, please.

A Conrad Appledorn.

Q You are the Conrad Appledorn who is production superintendent for International Oil & Gas Corporation in Artesia, New Mexico, and you testified in two previous cases and had your qualifications accepted?

A Yes.

MR. LOSEE: Are the witness's qualifications accept-

able, Mr. Examiner?

MR. UTZ: Yes, sir.

MR. LOSEE: Are you familiar with the Artesia Pool area and specifically the proposed project that is to be included in this Dunn B waterflood project?

A Yes.

Q Please refer to Exhibit 1, which is a map of the area, and explain its significance.

A Exhibit 1 is a map of the proposed project in Sections 10 and 11. The area includes 720 acres which the north one-half and the north-half of the southeast quarter of Section 10 and the northwest quarter of the north half of the southwest quarter and west half of the northeast quarter of Section 11, Township 18 South, Range 28 East, Eddy County.

Q Will you give us a brief history of this area.

A The first wells in this project area were drilled in 1925. These were the Dunn B Number 1 and Dunn B Number 2; one in Section 10 and one in Section 11, shown on the map. The present producing wells were drilled in 1956 and 1957, except for the Number 29, which is the last well drilled in the area--it was completed in March of last year. There are 14 producing wells and one dry hole in the project area that we propose to use. One additional well will be drilled--this will be Number 30 in the northeast quarter of the southeast quarter of Section

of Section 11. No information is available on the dry holes shown in the northwest quarter of the southeast quarter of Section 11, and it is thought that these wells were drilled in 1925; some of the earliest wells in the area. Of the 14 producing wells, nine have casing set just above the Lovington sand, which is the lowest producing sand in the area. The Lovington is produced through open hole and other zones through perforations. The five latest wells have casing set to total depth and the producing zones perforated and treated selectively. Completion practice included fracture treatments of individual producing zones, using either oil or water in volumes from 10,000 to 30,000 gallons. Reported potentials ranged from 45 to 100 barrels of oil per day.

Q I believe you stated you were going to drill a new well in the northeast of the southeast of Section 11. Isn't that actually northeast of the southwest quarter?

A Yes, northeast of the southwest.

Q What is the present cumulative production from the project area?

A The cumulative production from the project area as of 1/1/65 is 195,778 barrels.

Q What is the daily average production?

A At this time they are kicking about 55 barrels of oil per day, which is a rate of about four barrels of oil per

producing well per day. Exhibit 2 shows the producing history of the project area. It indicates that in 1964 the increase due to completion of Well Number 29. The area is now producing 40 to 50 barrels of water per day. This has remained constant for the last several years and most of it is believed to be coming from the Lovington sand. Gas-oil ratio is relatively low; less than 2,000 cubic feet of gas per barrel of oil.

Q In your opinion have all wells in this project area reached a stripper state?

A All except perhaps Well Number 29, which is at this time making about 12 barrels of oil per day.

Q And that is a recently completed well?

A Yes, the well was completed last year.

Q What are the producing intervals in these wells in this project area?

A The main producing zone is the Premier sand, which is of the Grayburg formation. This is the basal sand of the Grayburg, and is shown on Exhibit 3A, which is the Welex radioactivity log of the Dunn B Well Number 24, between the depths of 2,482 and 2,558. It is at the base of the Grayburg formation. The top of the San Andres is shown immediately below it. Secondary sands that are developed in the area are the Loco Hills and Metex zones, which extend--the various sands you see between the top of the Grayburg and the top of the

Premier. These are secondarily important but we are looking to them as if they have porocity and permeability they are subject to waterflood. The Lovington sand shown at the top of the Lovington at 2702 is open in 10 wells in the project area, and we intend to inject water in this zone where it has sufficient porosity and permeability.

Q Do you intend to actually inject water in all those zones where they are capable of taking it?

A Yes, we're going to try it.

Q Please refer to Exhibit 4 and explain what that is to the Commission.

A Exhibit 4 is a structure map which is contoured on the top of the San Andres. It indicates the structure on the top of the San Andres and reflects generally the structure of the Grayburg formation and to a lesser extent perhaps, that of the underlying Lovington sand. As shown, the structure has a southeasterly dip at about 150 feet per mile. It flattens somewhat at the eastern side of the project area. Oil accumulation throughout the area is universal. The Artesia Pool is continuous for a distance of probably eight miles but producability of the various sands is erratic and depends on porosity and permeability.

Q Is waterflooding feasible and practical in the Dunn area?

Q Is there any fresh water present in this area?

A There is some ground water present. The depth from surface varies from 220 to about 380. Generally there are small quantities, and not present in every well.

Q Will there be adequate protection of ground water sources from contamination by your injected water?

A Yes. Surface casing has been set in all wells, and in the one well that is to be drilled we will set surface casing and cement it.

Q Please refer to your Exhibits 5A through I, and explain what they portray.

A Exhibits 5A through I are schematic diagrams of the proposed injection wells. All wells have or will have adequate surface and production casing, cemented to cover all known sources of fresh water. We also propose to pressure test production casing from 1500 to 2000 PSI in those areas. On wells where the seal is questionable we will inject down 2-3/8 inch tubing and isolate the casing with a tension packer.

Q These diagrams reflect that you initially propose, if your wells withstand this 2,000 PSI test, to inject through the casing?

A Yes.

Q But in those wells that if you find any that are not going to stand the pressure, you would then inject through

tubing with the aid of a packer?

A Yes.

Q Please refer to these exhibits and tell us how you calculated the tops of the cement.

A The tops of the cement are calculated, based on experience. We used the type of cement--all these wells were cemented with Incor Pozmix, and the volume behind the pipe, taking into account any changes in hole diameter, and we calculated the tops based on volume of cement used to cement the casing.

Q How were these holes drilled--with what type of equipment?

A Most of the wells--let's say all the wells were drilled with cable tools.

Q Actually the cement tops are calculated, and not by the use of any temperature survey, as shown on Exhibits 5A through I?

A That's right.

Q Please refer to what has been marked as Exhibit 6, and explain the information set forth there.

A Exhibit 6 is a tabulation of the proposed injection wells which are currently producing wells--in other words, these are wells which will be converted to injection. It shows [illegible] casing and cement, the production zone, the grade of



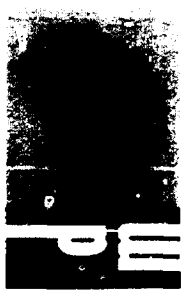

the casing, and weight, and the cement, and whether the casing was new or used when installed. In all cases it was new casing. It also shows completion date of the well and the total depth of the well.

Q What is the anticipated water injection rate for flooding?

A We are looking at 350 barrels per day per well, at a pressure of about 1500 PSI.

Q Will pressure, in your opinion, reach 2,000 PSI?

A No, I don't believe so. We haven't reached that pressure in any of our wells in the area to date.

Q What will be the source of injected water?

A We will purchase the water from Caprock Water Company.

Q Do you know where they will obtain the water?

A At the present time the water is from an East Red Lake source. They are now looking at the possibility of connecting to their Caprock system, I believe, to supplement the water supply.

Q Will you treat the water, or have to treat it, before you inject it?

A Yes, we will go to an oxygen and bacterial type treatment on this water.

Q In this flood, do you propose to re-inject produced water at a future date?

A Yes.

Q Will that water also be treated?

A Yes, that water will be treated for corrosion.

Q In conducting this flood do you propose to comply with the allowable provision of Rule 701E of the Oil Conservation Commission?

A Yes. We request 701E waterflood. We have a total of 14 wells now and will add two, which will give us a daily allowable of 672 barrels of oil a day--maximum daily allowable

Q Were Exhibits 1 through 6 prepared by you or under your supervision?

A Yes, they were.

MR. LOSEE: We offer Exhibits 1 through 6 in evidence, Mr. Examiner.

MR. UTZ: Without objection, Exhibits 1 through 6 will be entered into the record of this case.

MR. LOSEE: I have no further questions at this time.

MR. UTZ: Mr. Appledorn, I'd like you to explain the nature of the casing test you will conduct on these wells, if you will.

A We close the top of the casing, we load it with water and then put pump pressure on it to the pressure we

desire to test, which in this case would be 2,000 PSI.

Q At the surface?

A Yes.

Q Will you set a packer at the bottom of the casing?

A Yes, we will have to isolate the perforations.

Q So that actually the bottom of the casing will be subjected to surface pressure plus hydrostatic?

A Yes.

MR. IRBY: Frank Irby, State Engineer's Office. On this water treatment, you will use coupons to determine the effectiveness of it, as in the other cases?

A Yes, we have a regular coupon program which we follow continuously, on both producing wells and injection wells, and then we supplement that with visual inspection for tubercular development and bacterial development.

Q On your first response to a question concerning the testing of the casing, you said it would be tested to 1500 to 2000 PSI, and then later you answered the question with 2000 only.

A We will test at 2000. We have tested all of them at that.

MR. IRBY: That's all the questions I have.

MR. UTZ: Are there any further questions? ... Are there any other appearances in this case? ... The witness may

be excused. The case will be taken under advisement. We will take a 15-minute recess.

* * *

STATE OF NEW MEXICO )
) ss
COUNTY OF BERNALILLO )

I, ELIZABETH K. HALE, Court Reporter and Notary Public, do certify that the foregoing transcript in Case Number 3202, taken by me in shorthand, is a true and accurate record of proceedings to the best of my knowledge, skill and ability.

Witness my hand and seal of office this 10th day of February, 1965.

Elizabeth K. Hale
Notary Public

My commission expires

May 23, 1968.

I do hereby certify that the foregoing is a complete record of the proceedings in the Examiner hearing of Case No. 3202, heard by me on Jan. 7, 1965.

Examiner
New Mexico Oil Conservation Commission

Exhibit

No. 5-A

INTERNATIONAL OIL & GAS CORPORATION
SCHEMATIC DIAGRAM - PROPOSED INJECTION WELL

PURE B WELL NO. 13
NE 1/4 NE 1/4 Sec. 10, T18S, R28E, NMPM
EDDY COUNTY, NEW MEXICO

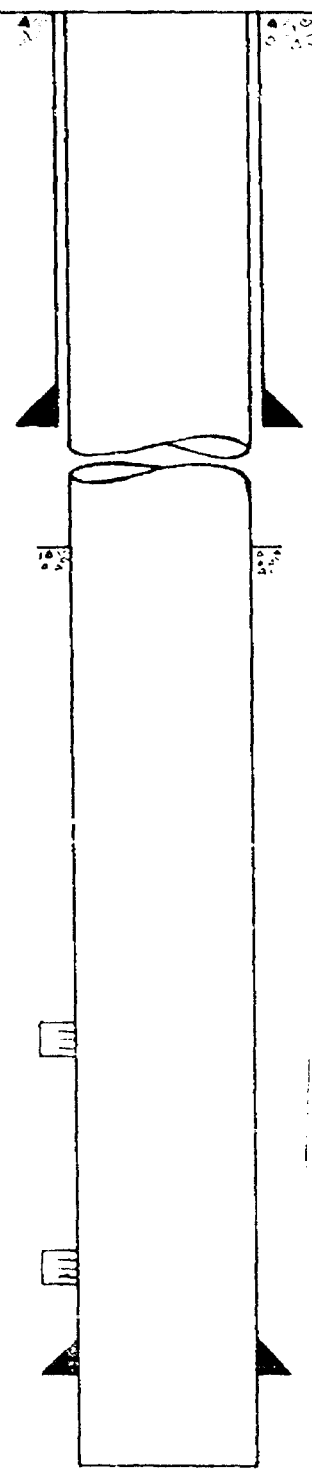

Cement circulated on 7" surface casing

7" surface casing set at 800 ft. w/100 sx. reg. cement

Injection to be from water down 4 1/2" casing

Cement 4 1/2" casing circulated 1352 ft.

PERFORATIONS: 2364-2777'

2900-2910'

OPEN HOLE: 2580'-2855'

4 1/2" 9.5# production casing set at 2540 ft. w/ 50 sx. Inc.-P mix.

T.D. 2555 ft.

BEFORE EXAMINER UTZ
OIL CONSERVATION COMMISSION
EXHIBIT NO. 5A
CASE NO. 3262

Exhibit
No. 5-B

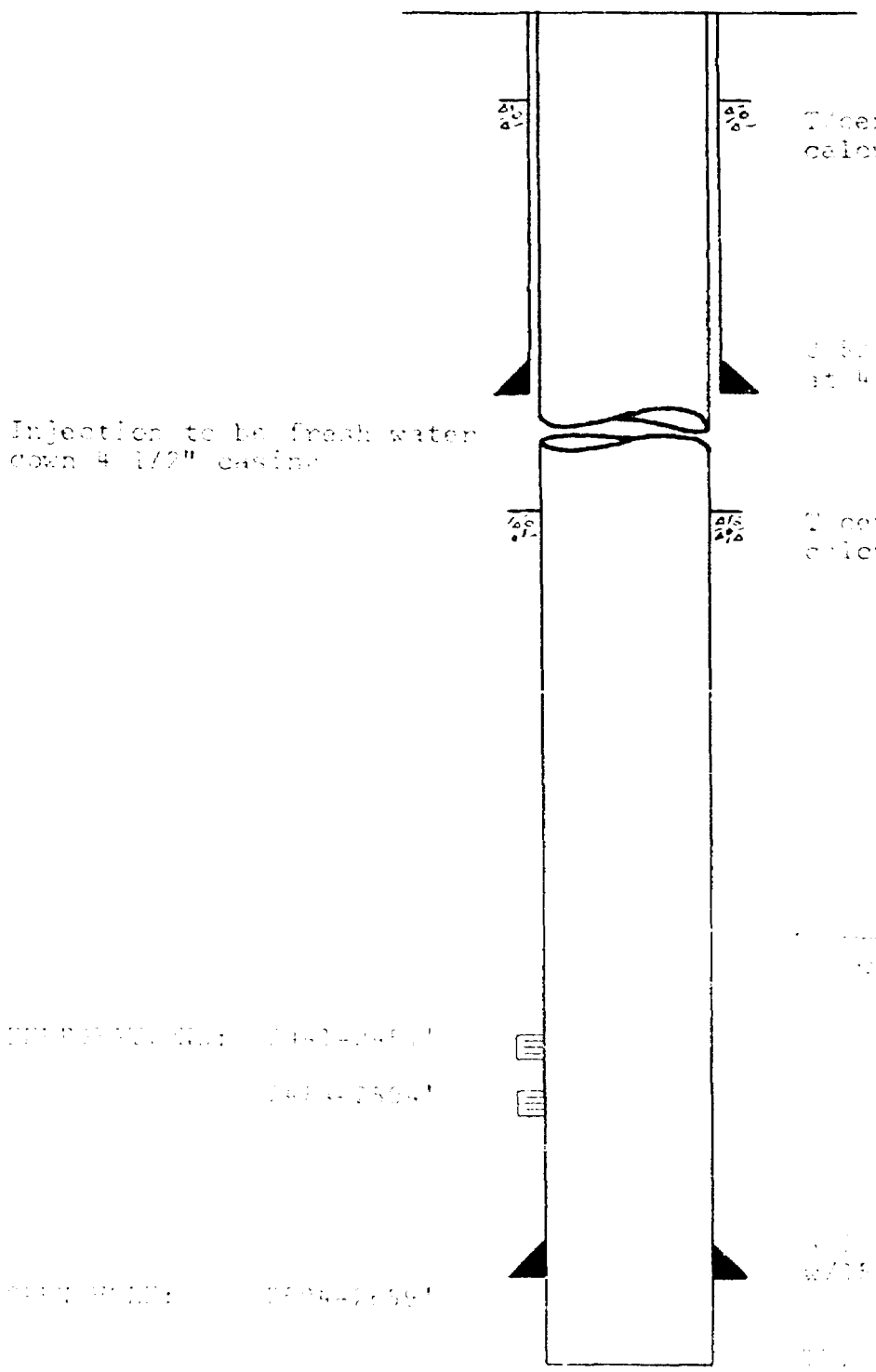

INTERNATIONAL OIL & GAS CORPORATION
SCHEMATIC DIAGRAM - PROPOSED INJECTION WELL

**Exhibit No. 5-C**

DUNN B WELL NO. 17
NE 1/4 NW 1/4 SEC. 17, T16S, R28E, NMPM
EDDY COUNTY, NEW MEXICO

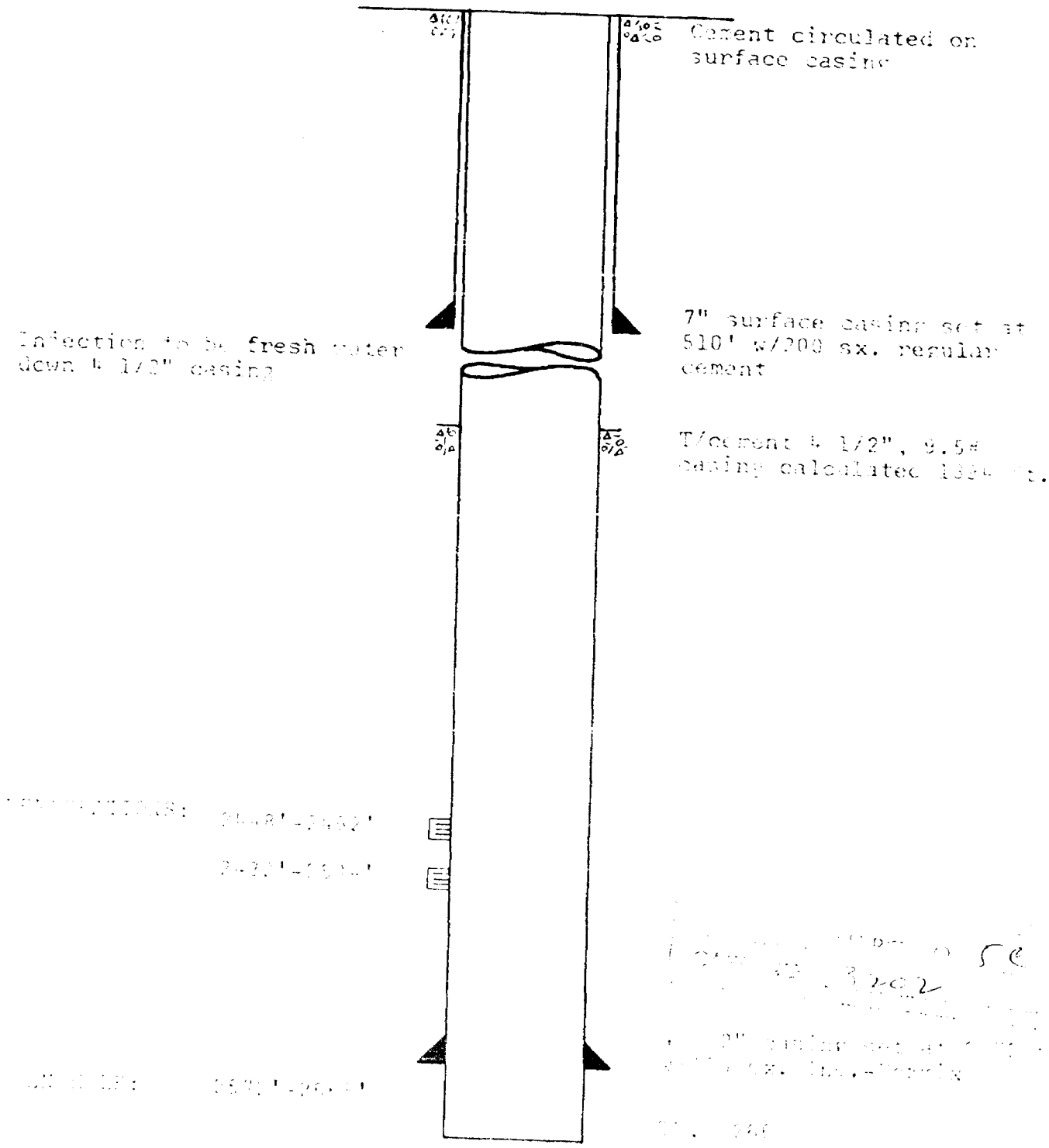

Exhibit
No. 5-D

INTERNATIONAL OIL & GAS CORPORATION
SCHEMATIC DIAGRAM-PROPOSED INJECTION WELL

DEEN B, WELL NO. 1a
NE 1/4 NW 1/4 Sec. 11, T10S, R28, NMPM
EDDY COUNTY, NEW MEXICO

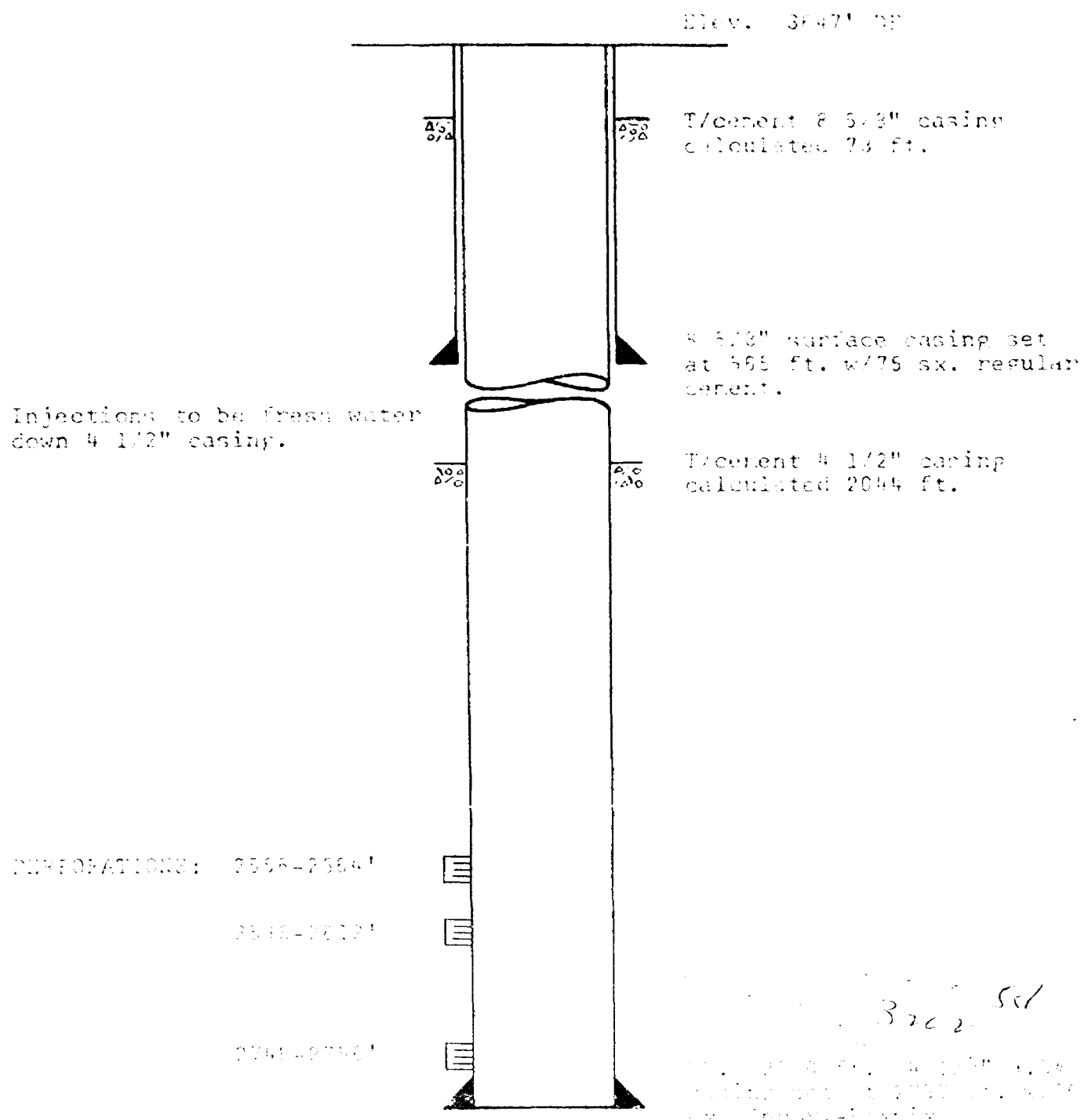

Exhibit
No. 5-E

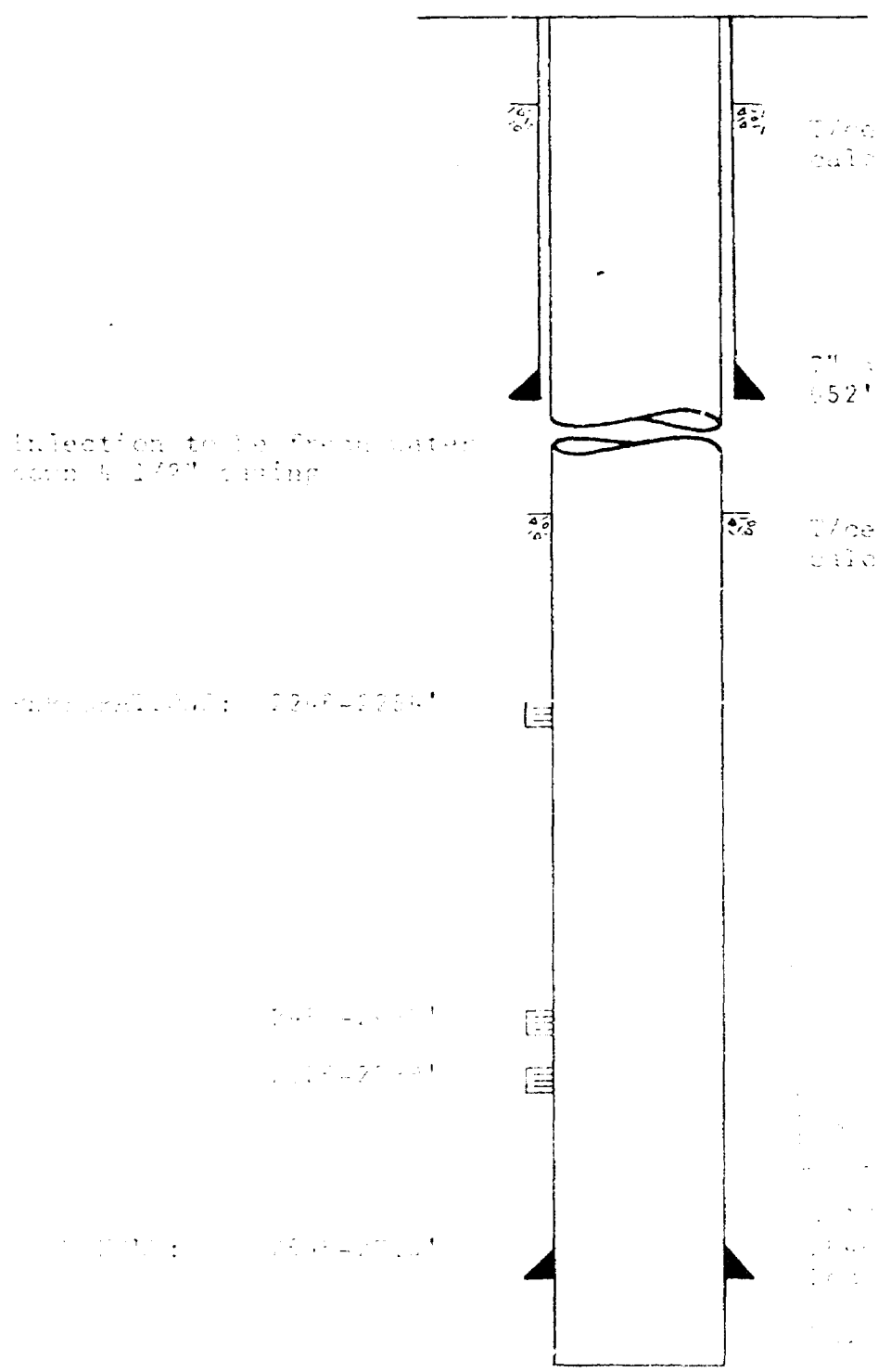

Exhibit
No. 5-F

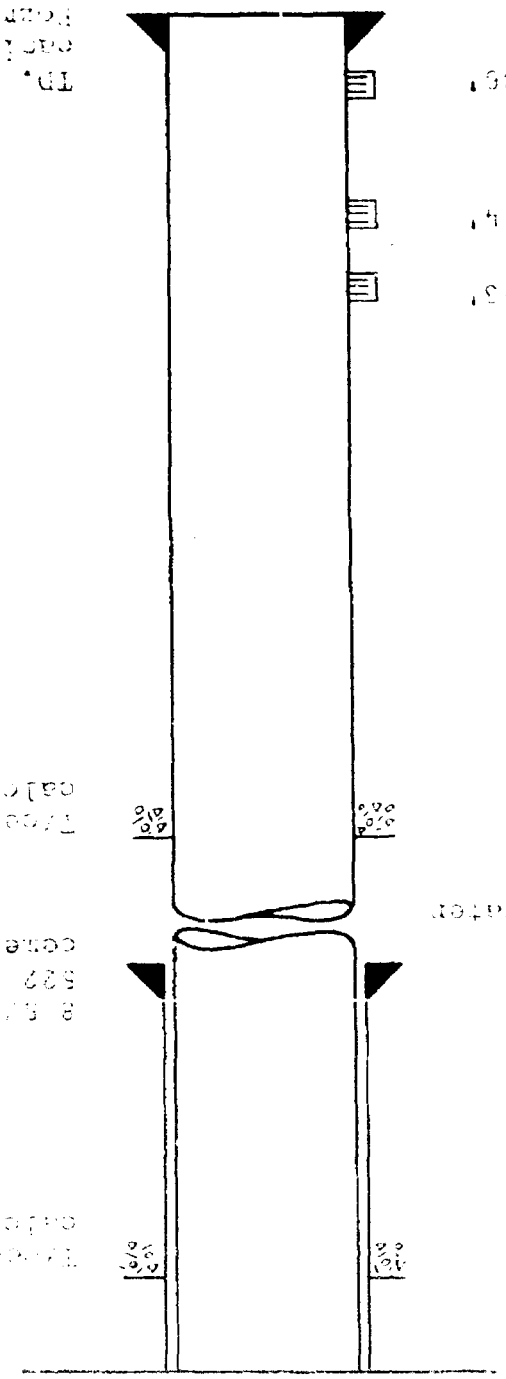

INTERNATIONAL OIL & GAS CORPORATION
SCHEMATIC DIAGRAM - PROPOSED INJECTION WELL

Exhibit
No. 5-G

DUAN #, WELL NO. 24
NE 1/4 SE 1/4 Sec. 19, T18S, R28E, N.M.P.M.
EDDY COUNTY, NEW MEXICO

Elev. 3817' DF

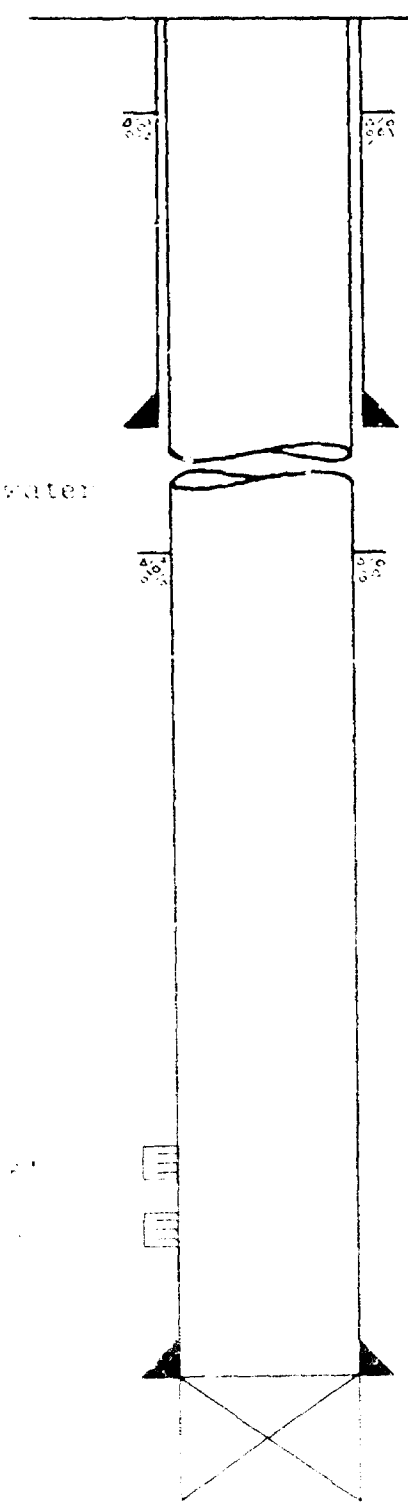

T/cement @ 5/8" casing
calculated 40 ft.

@ 5/8" surface casing set
at 535 ft. w/75 sx. regular
cement

Injection to be fresh water
down 4 1/2" casing

T. cement 4 1/2" casing
calculated 1457 ft.

BEFORE EXAMINER UTZ
OIL CONSERVATION COMMISSION
EXHIBIT NO. 5-G
CASE NO.

Exhibit
No. 5-I

Elev. 3020' G. L. est.
Cement circulated on
surface casing

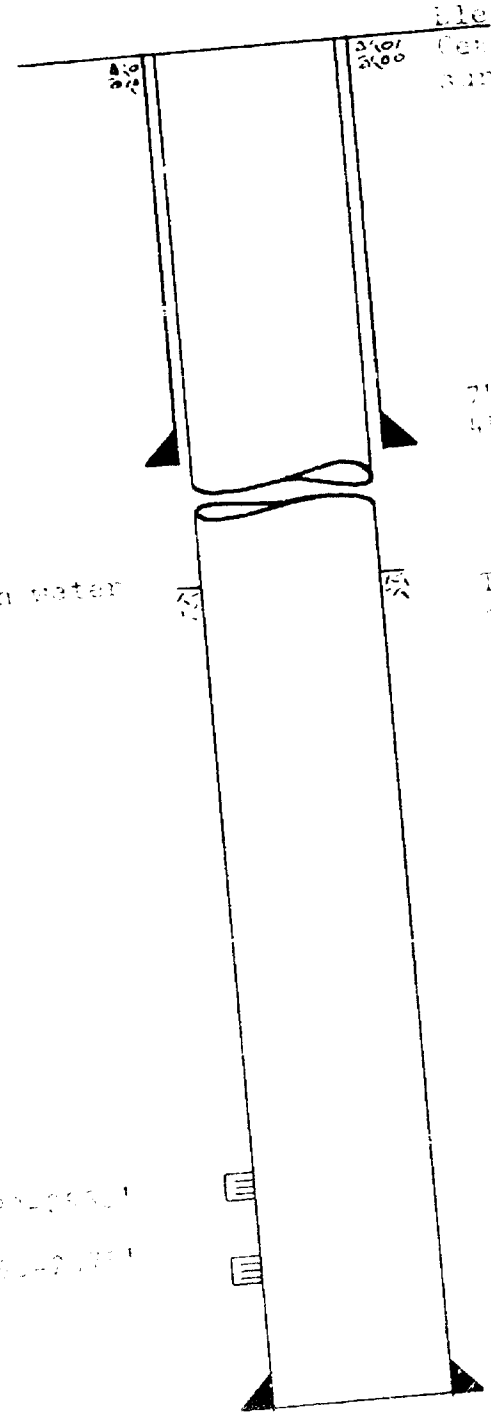

7" surface casing set at
450 ft. w/125 sx. ref. cement

Injection to be fresh water
down 4 1/2" casing.

T/cement 4 1/2" casing
calculated 1350 ft.

EXAMINER L
OIL CONSERVATION
EXHIBIT NO. 5-I
CASE NO. 3202

Exhibit
No. 6

## DUNN "B" WATERFLOOD PROJECT PROPOSED INJECTION WELLS

| WELL NO. | SURFACE CASING, AND CEMENT | PRODUCTION CASING, GRADE AND CEMENT | COMPLETION DATE | T. D. |
|---|---|---|---|---|
| Dunn "B" No. 13 | 7", 17#, 8rd @ 620' with 100 sx | 4 1/2", 9.5#, 8rd @ 2530' with 100 sx (New casing) | February 22, 1956 | 2555' |
| Dunn "B" No. 15 | 8 5/8", 24#, @ 488', with 50 sx | 4 1/2" @ 2604 w/150 sx (New casing) | October 20, 1956 | 2659' |
| Dunn "B" No. 17 | 7", 17#, 8rd @ 510' with 200 sx | 4 1/2", 9.5#, 8rd @ 2572' with 100 sx (New casing) | October 3, 1956 | 2668' |
| Dunn "B" No. 18 | 8 5/8", 24#, 8rd @ 565' with 75 sx | 4 1/2", 9.5#, 8rd @ 2757 with 200 sx (New casing) | March 20, 1957 | 2760' |
| Dunn "B" No. 19 | 7", 17#, 8rd @ 660' with 75 sx | 4 1/2", 9.5#, 8rd @ 2645' with 150 sx (New casing) | December 30, 1956 | 2710' |
| Dunn "B" No. 21 | 8 5/8", 24#, 8rd @ 522' with 75 sx | 4 1/2", 11.6#, 8rd @ 2750' With 250 sx (New casing) | June 13, 1957 | 2750' |
| Dunn "B" No. 24 | 8 5/8", 24#, 8rd @ 535' with 75 sx | None | P & A December 31, 1957 | 3947' |

Dunn "B" Waterflood Project Proposed Injection Wells
Page "2"

| WELL NO. | SURFACE CASING, AND CEMENT | PRODUCTION CASING, GRADE AND CEMENT | COMPLETION DATE | T. D. |
|---|---|---|---|---|
| Dunn "B" No. 29 | 8 5/8", 21.5#, H-40 @ 408' w/75 sx | 4 1/2", 11.6#, J-55 new casing @ 2654' w/175 Incor | March 1, 1964 | 2654' |