Form 3160-3
(June 2015)

FORM APPROVED
OMB No. 1004-0137
Expires: January 31, 2018

UNITED STATES
DEPARTMENT OF THE INTERIOR
BUREAU OF LAND MANAGEMENT

APPLICATION FOR PERMIT TO DRILL OR REENTER

5. Lease Serial No.

6. If Indian, Allotee or Tribe Name

1a. Type of work: ☐ DRILL ☐ REENTER

1b. Type of Well: ☐ Oil Well ☐ Gas Well ☐ Other

1c. Type of Completion: ☐ Hydraulic Fracturing ☐ Single Zone ☐ Multiple Zone

7. If Unit or CA Agreement, Name and No.

8. Lease Name and Well No.

2. Name of Operator

9. API Well No.
30-025-54479

3a. Address

3b. Phone No. *(include area code)*

10. Field and Pool, or Exploratory

4. Location of Well *(Report location clearly and in accordance with any State requirements.*)*

At surface

At proposed prod. zone

11. Sec., T. R. M. or Blk. and Survey or Area

14. Distance in miles and direction from nearest town or post office*

12. County or Parish

13. State

15. Distance from proposed* location to nearest property or lease line, ft. (Also to nearest drig. unit line, if any)

16. No of acres in lease

17. Spacing Unit dedicated to this well

18. Distance from proposed location* to nearest well, drilling, completed, applied for, on this lease, ft.

19. Proposed Depth

20. BLM/BIA Bond No. in file

21. Elevations (Show whether DF, KDB, RT, GL, etc.)

22. Approximate date work will start*

23. Estimated duration

24. Attachments

The following, completed in accordance with the requirements of Onshore Oil and Gas Order No. 1, and the Hydraulic Fracturing rule per 43 CFR 3162.3-3 (as applicable)

1. Well plat certified by a registered surveyor.
2. A Drilling Plan.
3. A Surface Use Plan (if the location is on National Forest System Lands, the SUPO must be filed with the appropriate Forest Service Office).
4. Bond to cover the operations unless covered by an existing bond on file (see Item 20 above).
5. Operator certification.
6. Such other site specific information and/or plans as may be requested by the BLM.

25. Signature

Name *(Printed/Typed)*

Date

Title

Approved by *(Signature)*

Name *(Printed/Typed)*

Date

Title

Office

Application approval does not warrant or certify that the applicant holds legal or equitable title to those rights in the subject lease which would entitle the applicant to conduct operations thereon.
Conditions of approval, if any, are attached.

Title 18 U.S.C. Section 1001 and Title 43 U.S.C. Section 1212, make it a crime for any person knowingly and willfully to make to any department or agency of the United States any false, fictitious or fraudulent statements or representations as to any matter within its jurisdiction.

APPROVED WITH CONDITIONS

(Continued on page 2)

*(Instructions on page 2)

Approval Date: 01/30/2025

Confidential

C-102 Submit Electronically Via OCD Permitting	State of New Mexico Energy, Minerals & Natural Resources Department OIL CONSERVATION DIVISION	Revised July 9, 2024 Submittal Type: ☑ Initial Submittal ☐ Amended Report ☐ As Drilled

WELL LOCATION INFORMATION

API Number	Pool Code	Pool Name
30-025-54479	96672	WC-025 G-08 S263412K; BONE SPRING

Property Code	Property Name	Well Number
337081	LOS VAQUEROS FED	111H

OGRID No.	Operator Name	Ground Level Elevation
372165	PERMIAN RESOURCES OPERATING, LLC	3,187'

Surface Owner: ☐ State ☐ Fee ☐ Tribal ☒ Federal | Mineral Owner: ☐ State ☐ Fee ☐ Tribal ☒ Federal

Surface Location

UL	Section	Township	Range	Lot	Ft. from N/S	Ft. from E/W	Latitude	Longitude	County
C	30	26S	35E		213' FNL	1,656' FWL	32.020978°	-103.409777°	LEA

Bottom Hole Location

UL	Section	Township	Range	Lot	Ft. from N/S	Ft. from E/W	Latitude	Longitude	County
LOT 2	31	26S	35E		100' FSL	660' FWL	32.000556°	-103.412988°	LEA

Dedicated Acres	Infill or Defining Well	Defining Well API	Overlapping Spacing Unit (Y/N)	Consolidation Code
241.29	Infill	Los Vaqueros Fed 201H	N	

Order Numbers. | Well setbacks are under Common Ownership: ☒Yes ☐No

Kick Off Point (KOP)

UL	Section	Township	Range	Lot	Ft. from N/S	Ft. from E/W	Latitude	Longitude	County
C	30	26S	35E		213' FNL	1,656' FWL	32.020978°	-103.409777°	LEA

First Take Point (FTP)

UL	Section	Township	Range	Lot	Ft. from N/S	Ft. from E/W	Latitude	Longitude	County
LOT 1	30	26S	35E		100' FNL	660' FWL	32.021293°	-103.412990°	LEA

Last Take Point (LTP)

UL	Section	Township	Range	Lot	Ft. from N/S	Ft. from E/W	Latitude	Longitude	County
LOT 2	31	26S	35E		100' FSL	660' FWL	32.000556°	-103.412988°	LEA

Unitized Area or Area of Uniform Interest	Spacing Unit Type ☒ Horizontal ☐ Vertical	Ground Floor Elevation:

OPERATOR CERTIFICATIONS

I hereby certify that the information contained herein is true and complete to the best of my knowledge and belief, and, if the well is a vertical or directional well, that this organization either owns a working interest or unleased mineral interest in the land including the proposed bottom hole location or has a right to drill this well at this location pursuant to a contract with an owner of a working interest or unleased mineral interest, or to a voluntary pooling agreement or a compulsory pooling order heretofore entered by the division.

If this well is a horizontal well, I further certify that this organization has received the consent of at least one lessee or owner of a working interest or unleased mineral interest in each tract (in the target pool or formation) in which any part of the well's completed interval will be located or obtained a compulsory pooling order from the division.

SURVEYOR CERTIFICATIONS

I hereby certify that the well location shown on this plat was plotted from field notes of actual surveys made by me or under my supervision, and that the same is true and correct to the best of my belief.

MARK J. MURRAY NEW MEXICO 12177 REGISTERED PROFESSIONAL SURVEYOR

Date: 2/11/2025

Signature	Date	Signature and Seal of Professional Surveyor
Cassie Evans	2/19/25	

Printed Name	Certificate Number	Date of Survey
Cassie Evans	12177	2/11/2025

Email Address Cassie.Evans@permianres.com

Note: No allowable will be assigned to this completion until all interests have been consolidated or a non-standard unit has been approved by the division.

ACREAGE DEDICATION PLATS

This grid represents a standard section. You may superimpose a non-standard section, or larger area, over this grid. Operators must outline the dedicated acreage in a red box, clearly show the well surface location and bottom hole location, if it is directionally drilled, with the dimensions from the section lines in the cardinal directions. If this is a horizontal wellbore show on this plat the location of the First Take Point and Last Take Point, and the point within the Completed interval (other than the First Take Point or Last Take Point) that is closest to any outer boundary of the tract.

Surveyors shall use the latest United States government survey or dependent resurvey. Well locations will be in reference to the New Mexico Principal Meridian. If the land is not surveyed, contact the OCD Engineering Bureau. Independent subdivision surveys will not be acceptable.

LOS VAQUEROS FED 111H

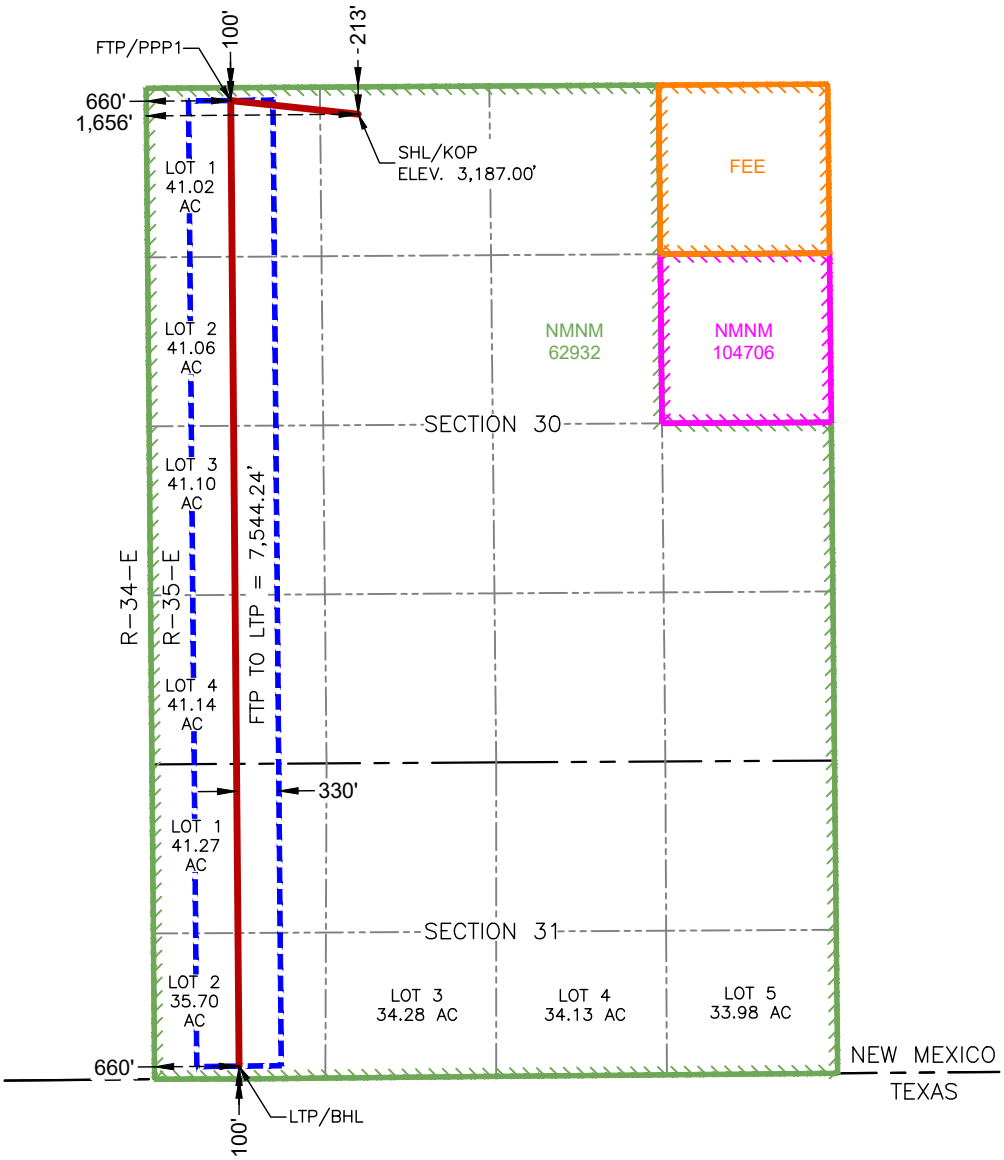

SURFACE HOLE LOCATION
& KICK-OFF POINT
213' FNL & 1,656' FWL
ELEV. = 3,187.00'

NAD 83 X = 827,569.07'
NAD 83 Y = 372,593.80'
NAD 83 LAT = 32.020978°
NAD 83 LONG = -103.409777°
NAD 27 X = 786,380.76'
NAD 27 Y = 372,536.69'
NAD 27 LAT = 32.020851°
NAD 27 LONG = -103.409317°

FIRST TAKE POINT &
PENETRATION POINT 1
100' FNL & 660' FWL

NAD 83 X = 826,572.55'
NAD 83 Y = 372,700.03'
NAD 83 LAT = 32.021293°
NAD 83 LONG = -103.412990°
NAD 27 X = 785,384.25'
NAD 27 Y = 372,642.92'
NAD 27 LAT = 32.021167°
NAD 27 LONG = -103.412529°

LAST TAKE POINT &
BOTTOM HOLE LOCATION
100' FSL & 660' FWL

NAD 83 X = 826,637.20'
NAD 83 Y = 365,156.06'
NAD 83 LAT = 32.000556°
NAD 83 LONG = -103.412988°
NAD 27 X = 785,448.56'
NAD 27 Y = 365,099.16'
NAD 27 LAT = 32.000429°
NAD 27 LONG = -103.412529°

State of New Mexico
Energy, Minerals and Natural Resources Department

Submit Electronically
Via E-permitting

Oil Conservation Division
1220 South St. Francis Dr.
Santa Fe, NM 87505

NATURAL GAS MANAGEMENT PLAN

This Natural Gas Management Plan must be submitted with each Application for Permit to Drill (APD) for a new or recompleted well.

Section 1 – Plan Description

Effective May 25, 2021

I. Operator: Permian Resources Operating, LLC **OGRID:** 372165 **Date:** 07 / 23 / 2024

II. Type: ☒ Original ☐ Amendment due to ☐ 19.15.27.9.D(6)(a) NMAC ☐ 19.15.27.9.D(6)(b) NMAC ☐ Other.

If Other, please describe: _____

III. Well(s): Provide the following information for each new or recompleted well or set of wells proposed to be drilled or proposed to be recompleted from a single well pad or connected to a central delivery point.

Well Name	API	ULSTR	Footages	Anticipated Oil BBL/D	Anticipated Gas MCF/D	Anticipated Produced Water BBL/D
SEE ATTACHED WELL LIST						

IV. Central Delivery Point Name: El Campeon CTB 30 [See 19.15.27.9(D)(1) NMAC]

V. Anticipated Schedule: Provide the following information for each new or recompleted well or set of wells proposed to be drilled or proposed to be recompleted from a single well pad or connected to a central delivery point.

Well Name	API	Spud Date	TD Reached Date	Completion Commencement Date	Initial Flow Back Date	First Production Date
SEE ATTACHED WELL LIST						

VI. Separation Equipment: ☒ Attach a complete description of how Operator will size separation equipment to optimize gas capture.

VII. Operational Practices: ☒ Attach a complete description of the actions Operator will take to comply with the requirements of Subsection A through F of 19.15.27.8 NMAC.

VIII. Best Management Practices: ☒ Attach a complete description of Operator's best management practices to minimize venting during active and planned maintenance.

Section 3 - Certifications

Effective May 25, 2021

Operator certifies that, after reasonable inquiry and based on the available information at the time of submittal:

☐ Operator will be able to connect the well(s) to a natural gas gathering system in the general area with sufficient capacity to transport one hundred percent of the anticipated volume of natural gas produced from the well(s) commencing on the date of first production, taking into account the current and anticipated volumes of produced natural gas from other wells connected to the pipeline gathering system; or

☐ Operator will not be able to connect to a natural gas gathering system in the general area with sufficient capacity to transport one hundred percent of the anticipated volume of natural gas produced from the well(s) commencing on the date of first production, taking into account the current and anticipated volumes of produced natural gas from other wells connected to the pipeline gathering system. ***If Operator checks this box, Operator will select one of the following:***

Well Shut-In. ☐ Operator will shut-in and not produce the well until it submits the certification required by Paragraph (4) of Subsection D of 19.15.27.9 NMAC; or

Venting and Flaring Plan. ☐ Operator has attached a venting and flaring plan that evaluates and selects one or more of the potential alternative beneficial uses for the natural gas until a natural gas gathering system is available, including:

- **(a)** power generation on lease;
- **(b)** power generation for grid;
- **(c)** compression on lease;
- **(d)** liquids removal on lease;
- **(e)** reinjection for underground storage;
- **(f)** reinjection for temporary storage;
- **(g)** reinjection for enhanced oil recovery;
- **(h)** fuel cell production; and
- **(i)** other alternative beneficial uses approved by the division.

Section 4 - Notices

1. If, at any time after Operator submits this Natural Gas Management Plan and before the well is spud:

(a) Operator becomes aware that the natural gas gathering system it planned to connect the well(s) to has become unavailable or will not have capacity to transport one hundred percent of the production from the well(s), no later than 20 days after becoming aware of such information, Operator shall submit for OCD's approval a new or revised venting and flaring plan containing the information specified in Paragraph (5) of Subsection D of 19.15.27.9 NMAC; or

(b) Operator becomes aware that it has, cumulatively for the year, become out of compliance with its baseline natural gas capture rate or natural gas capture requirement, no later than 20 days after becoming aware of such information, Operator shall submit for OCD's approval a new or revised Natural Gas Management Plan for each well it plans to spud during the next 90 days containing the information specified in Paragraph (2) of Subsection D of 19.15.27.9 NMAC, and shall file an update for each Natural Gas Management Plan until Operator is back in compliance with its baseline natural gas capture rate or natural gas capture requirement.

2. OCD may deny or conditionally approve an APD if Operator does not make a certification, fails to submit an adequate venting and flaring plan which includes alternative beneficial uses for the anticipated volume of natural gas produced, or if OCD determines that Operator will not have adequate natural gas takeaway capacity at the time a well will be spud.

I certify that, after reasonable inquiry, the statements in and attached to this Natural Gas Management Plan are true and correct to the best of my knowledge and acknowledge that a false statement may be subject to civil and criminal penalties under the Oil and Gas Act.

Signature:	Jennifer Elrod
Printed Name:	Jennifer Elrod
Title:	Sr. Regulatory Analyst
E-mail Address:	jennifer.elrod@permianres.com
Date:	7/24/2024
Phone:	940-452-6214

OIL CONSERVATION DIVISION (Only applicable when submitted as a standalone form)
Approved By:
Title:
Approval Date:
Conditions of Approval:

WELL NAME	API	UL/SECT/T/R	FOOTAGES	ANTICIPATED OIL BBL/D	ANTICIPATED GAS MCF/D	ANTICIPATED WATER BBL/D
Los Vaqueros Fed 111H		C-30-26S-35E	213' FNL, 1656'FWL	1100	2200	3200
Los Vaqueros Fed 121H		C-30-26S-35E	212'FNL, 1722' FWL	1100	2200	3200
Los Vaqueros Fed 151H		C-30-26S-35E	212' FNL, 1788' FWL	1100	2200	3200
Los Vaqueros Fed 112H		C-30-26S-35E	213' FNL, 1689' FWL	1100	2200	3200
Los Vaqueros Fed 122H		C-30-26S-35E	212' FNL, 1755' FWL	1100	2200	3200
Los Vaqueros Fed 152H		C-30-26S-35E	211'FNL, 1821' FWL	1100	2200	3200
Los Vaqueros Fed 113H		B-30-25S-35E	355'FNL, 1938' FEL	1100	2200	3200
Los Vaqueros Fed 123H		B-30-25S-35E	354' FNL, 1871' FEL	1100	2200	3200
Los Vaqueros Fed 153H		B-30-25S-35E	354' FNL, 1805' FEL	1100	2200	3200
Los Vaqueros Fed Com 114H		B-30-25S-35E	355' FNL, 1904' FEL	1100	2200	3200
Los Vaqueros Fed Com 124H		B-30-25S-35E	354' FNL, 1838' FEL	1100	2200	3200
Los Vaqueros Fed Com 154H		B-30-25S-35E	353' FNL, 1772' FEL	1100	2200	3200
WELL NAME	API	SPUD	TD	COMPLETION DATE	FLOW BACK DATE	FIRST PRODUCTION
Los Vaqueros Fed 111H		4/1/2025	5/1/2025	7/1/2025	8/1/2025	8/1/2025
Los Vaqueros Fed 121H		4/1/2025	5/1/2025	7/1/2025	8/1/2025	8/1/2025
Los Vaqueros Fed 151H		4/1/2025	5/1/2025	7/1/2025	8/1/2025	8/1/2025
Los Vaqueros Fed 112H		4/1/2025	5/1/2025	7/1/2025	8/1/2025	8/1/2025
Los Vaqueros Fed 122H		4/1/2025	5/1/2025	7/1/2025	8/1/2025	8/1/2025
Los Vaqueros Fed 152H		4/1/2025	5/1/2025	7/1/2025	8/1/2025	8/1/2025
Los Vaqueros Fed 113H		4/1/2025	5/1/2025	7/1/2025	8/1/2025	8/1/2025
Los Vaqueros Fed 123H		4/1/2025	5/1/2025	7/1/2025	8/1/2025	8/1/2025
Los Vaqueros Fed 153H		4/1/2025	5/1/2025	7/1/2025	8/1/2025	8/1/2025

Los Vaqueros Fed Com 114H		4/1/2025	5/1/2025	7/1/2025	8/1/2025	8/1/2025
Los Vaqueros Fed Com 124H		4/1/2025	5/1/2025	7/1/2025	8/1/2025	8/1/2025
Los Vaqueros Fed Com 154H		4/1/2025	5/1/2025	7/1/2025	8/1/2025	8/1/2025

WELL NAME	API	Anticipated Average Natural Gas Rate MCF/D	Anticipated Volume of Natural Gas for the First Year MCF
Los Vaqueros Fed 111H		1023	394000
Los Vaqueros Fed 121H		1045	390000
Los Vaqueros Fed 151H		1023	394000
Los Vaqueros Fed 112H		1023	394000
Los Vaqueros Fed 122H		1045	390000
Los Vaqueros Fed 152H		1023	394000
Los Vaqueros Fed 113H		1023	394000
Los Vaqueros Fed 123H		1045	390000
Los Vaqueros Fed 153H		1023	394000
Los Vaqueros Fed Com 114H		1023	394000
Los Vaqueros Fed Com 124H		1045	390000
Los Vaqueros Fed Com 154H		1023	394000

Permian Resources Operating, LLC (372165)

Natural Gas Management Plan Descriptions

VI. Separation Equipment:

Permian utilizes a production forecast from our Reservoir Engineering team to appropriately size each permanent, 3-phase separator and heater treater utilized for production operations. Our goal is to maintain 5 minutes of retention time in the test vessel and 20 minutes in the heater treater at peak production rates. The gas produced is routed from the separator to the gas sales line.

VII. Operational Practices:

Drilling

During Permian's drilling operations it is uncommon for venting or flaring to occur. If flaring is needed due to safety concerns, gas will be routed to a flare and volumes will be estimated.

Flowback

During completion/recompletion flowback operations, after separation flowback begins and as soon as it is technically feasible, Permian routes gas though a permanent separator and the controlled facility where the gas is either sold or flared through a high-pressure flare if needed.

Production

Per 19.15.27.8.D, Permian's facilities are designed to minimize waste. Our produced gas will only be vented or flared in an emergency or malfunction situation, except as allowed for normal operations noted in 19.15.27.8.D(2) & (4). All gas that is flared is metered. All gas that may be vented will be estimated.

Performance Standards

Permian utilizes a production forecast from our Reservoir Engineering team to appropriately size each permanent, 3-phase separator and heater treater utilized for production operations.

All of Permian's permanent storage tanks associated with production operations which are routed to a flare or control device are equipped with an automatic gauging system.

All of Permian's flare stacks, both currently installed and for future installation, are:

1) Appropriately sized and designed to ensure proper combustion efficiency.
2) Equipped with an automatic ignitor or continuous pilot.
3) Anchored and located at least 100 feet from the well and storage tanks.

Permian's field operations and HSE teams have implemented an AVO inspection schedule that adheres to the requirements of 19.15.27.8.E(5).

All of our operations and facilities are designed to minimize waste. We routinely employ the following methods and practices:

- Closed-loop systems
- Enclosed and properly sized tanks

- Vapor recovery units to maximize recovery of low-pressure gas streams and potential unauthorized emissions
- Low-emitting or electric engines whenever practical
- Combustors and flare stacks in the event of a malfunction or emergency
- Routine facility inspections to identify leaking components, functioning control devices, such as flares and combustors, and repair / replacement of malfunctioning components where applicable

Measurement or estimation

Permian measures or estimates the volumes of natural gas vented, flared and/or beneficially used for all of our drilling, completing and producing wells. We utilize accepted industry standards and methodology which can be independently verified. Annual GOR testing is completed on our wells and will be submitted as required by the OCD. None of our equipment is designed to allow diversion around metering elements except during inspection, maintenance and repair operations.

VIII. Best Management Practices:

Permian utilizes the following BMPs to minimize venting during active and planned maintenance activities:

- Use a closed-loop process wherever possible during planned maintenance activities, such as blowdowns, liquid removal, and work over operations.
- Employ low-emitting or electric engines for equipment, such as compressors
- Adhere to a strict preventative maintenance program which includes routine facility inspections, identification of component malfunctions, and repairing or replacing components such as hatches, seals, valves, etc. where applicable
- Utilize vapor recovery units (VRU's) to maximize recovery of volumes of low-pressure gas streams and potential unauthorized emissions
- Route low pressure gas and emissions streams to a combustion device to prevent venting where necessary

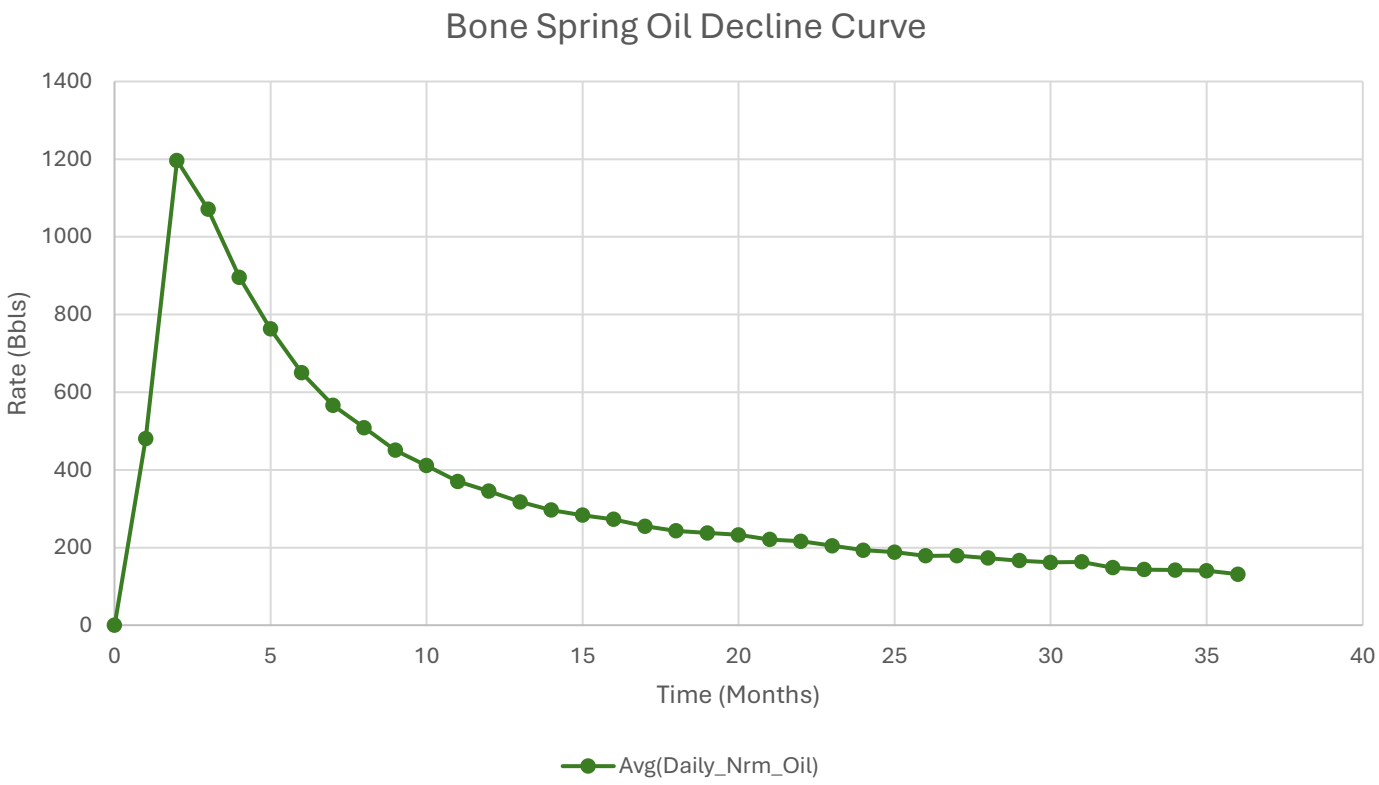

1. Represented curve is generic based on 3-Years available information for the Bone Spring formation and may not be representative of forecasted production or actual volumes.
2. Decline curves are based on an average 10,000ft lateral length. Multiple factors may influence production and decline curves, including but not limited to: lateral length and completion type.

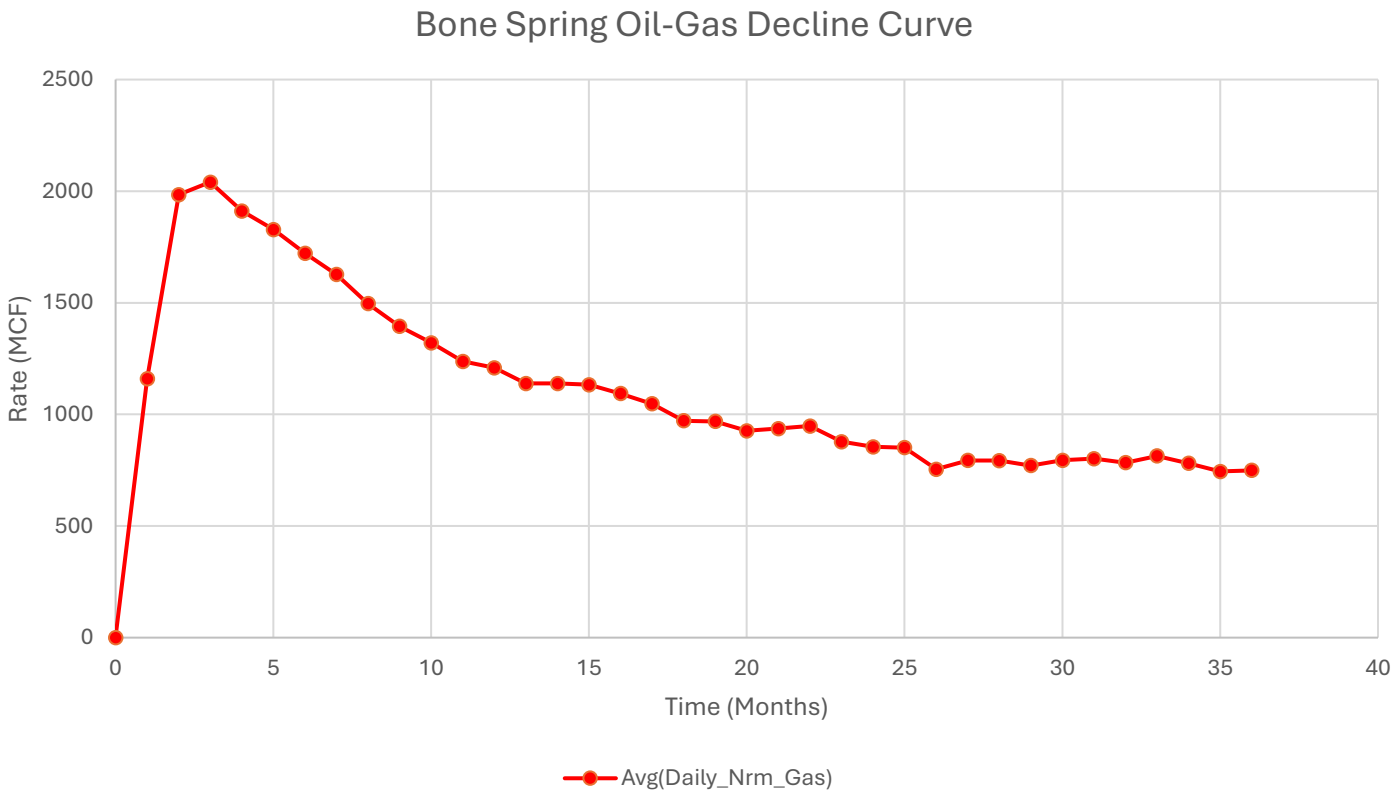

1. Represented curve is generic based on 3-Years available information for the Bone Spring formation and may not be representative of forecasted production or actual volumes.
2. Decline curves are based on an average 10,000ft lateral length. Multiple factors may influence production and decline curves, including but not limited to: lateral length and completion type.

AFMSS
U.S. Department of the Interior
BUREAU OF LAND MANAGEMENT

Drilling Plan Data Report
01/31/2025

APD ID: 10400100031 **Submission Date:** 07/26/2024

Operator Name: PERMIAN RESOURCES OPERATING LLC

Well Name: LOS VAQUEROS FEDERAL **Well Number:** 111H

Well Type: OIL WELL **Well Work Type:** Drill

Highlighted data reflects the most recent changes

Show Final Text

Section 1 - Geologic Formations

Formation ID	Formation Name	Elevation	True Vertical	Measured Depth	Lithologies	Mineral Resources	Producing Formatio
14942377	RUSTLER	2427	1040	1040	SANDSTONE	USEABLE WATER	N
14942378	TOP SALT	927	1500	1500	SALT	NONE	N
14942380	LAMAR	-2907	5334	5334	SANDSTONE	NONE	N
14942382	CHERRY CANYON	-2951	5378	5378	SANDSTONE	NATURAL GAS, OIL	N
14942384	BONE SPRING LIME	-6847	9274	9274	LIMESTONE, SHALE	NATURAL GAS, OIL	N
14942385	BONE SPRING 1ST	-8023	10450	10450	LIMESTONE, SANDSTONE, SHALE	NATURAL GAS, OIL	Y

Section 2 - Blowout Prevention

Pressure Rating (PSI): 5M **Rating Depth:** 11650

Equipment: BOPE will meet all requirements for above listed system per 43 CFR 3172. BOPE with working pressure ratings in excess of anticipated maximum surface pressure will be utilized for well control from drill out of surface casing to TMD. The system may be upgraded to a higher pressure but still tested to the working pressure listed in the table above. If the system is upgraded all of the components installed will be functional, tested, and will meet all requirements per 43 CFR 3172. The wellhead will be a multibowl speed head allowing for hangoff of intermediate casing of the surface x intermedicate annulus without breaking the connection between the BOP & wellhead. A variance is requested to utilize a flexible choke line (flexhose) from the BOP to choke manifold.

Requesting Variance? YES

Variance request: Variance request: Multibowl Wellhead, Flexhose, Breaktesting, Offline Cementing Variances. Attachments in Section 8.
Testing Procedure: Operator requests to ONLY test broken pressure seals per API Standard 53 and the attachments in Section 8. The BOP test shall be performed before drilling out of the surface casing shoe and will occur at a minimum: a. when initially installed, b. whenever any seal subject to test pressure is broken, c. following related repairs, d. at 21-day intervals. Testing of the ram type preventer(s) and annual type preventer(s) shall be tested per 43 CFR 3172. The BOPE configuration, choke manifold layout, and accumulator system will be in compliance with 43 CFR 3172. Bleed lines will discharge 100' from wellhead in non-H2S scenarios and 150' from wellhead in H2S scenarios.

Choke Diagram Attachment:

5M_Choke_Manifold_20240621114516.pdf

Operator Name: PERMIAN RESOURCES OPERATING LLC

Well Name: LOS VAQUEROS FEDERAL **Well Number:** 111H

5M_Choke_Manifold_20240621114516.pdf

BOP Diagram Attachment:

5M_BOP_20240621114521.pdf

Section 3 - Casing

Casing ID	String Type	Hole Size	Csg Size	Condition	Standard	Tapered String	Top Set MD	Bottom Set MD	Top Set TVD	Bottom Set TVD	Top Set MSL	Bottom Set MSL	Calculated casing length MD	Grade	Weight	Joint Type	Collapse SF	Burst SF	Joint SF Type	Joint SF	Body SF Type	Body SF
1	SURFACE	17.5	13.375	NEW	API	N	0	1065	0	1065	3187	2122	1065	J-55	54.5	BUTT	2.15	1.63	DRY	5.75	DRY	5.4
2	INTERMEDIATE	12.25	9.625	NEW	API	N	0	5284	0	5284	3533	-2097	5284	J-55	40	BUTT	2.73	1.59	DRY	2.29	DRY	2.02
3	PRODUCTION	8.75	5.5	NEW	NON API	N	0	17993	0	10650	3533	-7463	17993	OTHER	17	OTHER - GEOCONN	1.35	1.41	DRY	1.94	DRY	1.94

Casing Attachments

Casing ID: 1 **String** SURFACE

Inspection Document:

Spec Document:

Tapered String Spec:

Casing Design Assumptions and Worksheet(s):

Los_Vaqueros_Fed_111H_CsgAssumptions_20240723141448.pdf

CONFIDENTIAL

Operator Name: PERMIAN RESOURCES OPERATING LLC

Well Name: LOS VAQUEROS FEDERAL **Well Number:** 111H

Casing Attachments

Casing ID: 2 **String** INTERMEDIATE

Inspection Document:

Spec Document:

Tapered String Spec:

Casing Design Assumptions and Worksheet(s):

Los_Vaqueros_Fed_111H_CsgAssumptions_20240723141014.pdf

Casing ID: 3 **String** PRODUCTION

Inspection Document:

Spec Document:

17_GeoConn_Prod_SpecSheet_20240726104447.pdf

Tapered String Spec:

Casing Design Assumptions and Worksheet(s):

Los_Vaqueros_Fed_111H_CsgAssumptions_20240723141321.pdf

Section 4 - Cement

String Type	Lead/Tail	Stage Tool Depth	Top MD	Bottom MD	Quantity(sx)	Yield	Density	Cu Ft	Excess%	Cement type	Additives
SURFACE	Lead		0	853	640	1.88	12.7	1190	100	CLASS C	ECONOCEM-HLC + 5% SALT + 5% KOL-SEAL
SURFACE	Tail		852	1065	830	1.34	14.8	1110	50	Class C	ACCELERATOR
INTERMEDIATE	Lead		0	4220	900	2.08	12.7	1870	50	CLASS C	EconoCem-HLC + 5% Salt + 5% Kol-Seal
INTERMEDIATE	Tail		4220	5284	380	1.34	14.8	500	50	CLASS C	Retarder
PRODUCTION	Lead		4784	10257	790	2.41	11.5	1890	40	Class H	POZ, Extender, Fluid Loss, Dispersant,

CONFIDENTIAL

Operator Name: PERMIAN RESOURCES OPERATING LLC

Well Name: LOS VAQUEROS FEDERAL **Well Number:** 111H

String Type	Lead/Tail	Stage Tool Depth	Top MD	Bottom MD	Quantity(sx)	Yield	Density	Cu Ft	Excess%	Cement type	Additives
											Retarder
PRODUCTION	Tail		10257	17993	1020	1.73	12.5	1750	25	Class H	POZ, Extender, Fluid Loss, Dispersant, Retarder

Section 5 - Circulating Medium

Mud System Type: Closed

Will an air or gas system be Used? NO

Description of the equipment for the circulating system in accordance with Onshore Order #2:

Diagram of the equipment for the circulating system in accordance with Onshore Order #2:

Describe what will be on location to control well or mitigate other conditions: Sufficient quantities of mud materials will be on the well site at all times for the purpose of assuring well control and maintaining wellbore integrity. Surface interval will employ fresh water mud. The intermediate hole will utilize a saturated brine fluid to inhibit salt washout. The production hole will employ brine based and oil base fluid to inhibit formation reactivity and of the appropriate density to maintain well control.

Describe the mud monitoring system utilized: Centrifuge separation system. Open tank monitoring with EDR will be used for drilling fluids and return volumes. Open tank monitoring will be used for cement and cuttings return volumes. Mud properties will be monitored at least every 24 hours using industry accepted mud check practices.

Circulating Medium Table

Top Depth	Bottom Depth	Mud Type	Min Weight (lbs/gal)	Max Weight (lbs/gal)	Density (lbs/cu ft)	Gel Strength (lbs/100 sqft)	PH	Viscosity (CP)	Salinity (ppm)	Filtration (cc)	Additional Characteristics
0	1065	SPUD MUD	8.6	9.5							
1065	5284	SALT SATURATED	10	10							
5284	17993	OTHER : WATER BASED MUD - 5284'-11007' OBM-11007'-17993'	9	10							

Operator Name: PERMIAN RESOURCES OPERATING LLC

Well Name: LOS VAQUEROS FEDERAL **Well Number:** 111H

Section 6 - Test, Logging, Coring

List of production tests including testing procedures, equipment and safety measures:

Will utilize MWD/LWD from intermediate hole to TD of the well

List of open and cased hole logs run in the well:

DIRECTIONAL SURVEY,

Coring operation description for the well:

N/A

Section 7 - Pressure

Anticipated Bottom Hole Pressure: 5540 **Anticipated Surface Pressure:** 3196

Anticipated Bottom Hole Temperature(F): 161

Anticipated abnormal pressures, temperatures, or potential geologic hazards? NO

Describe:

Contingency Plans geoharzards description:

Contingency Plans geohazards

Hydrogen Sulfide drilling operations plan required? YES

Hydrogen sulfide drilling operations

Los_Vaqueros_Pad_2_H2S_20240723142915.pdf

Section 8 - Other Information

Proposed horizontal/directional/multi-lateral plan submission:

LOS_VAQUEROS_FED_111H_DD_20240723143600.pdf
LOS_VAQUEROS_FED_111H_AC_20240723143600.pdf

Other proposed operations facets description:

WASTE MANAGEMENT PLAN

Other proposed operations facets attachment:

Los_Vaqueros_NGMP_20240725102318.pdf

Other Variance attachment:

Los_Vaqueros_BOP_Break_20240723143404.pdf
Los_Vaqueros_FH_20240723143405.pdf
Los_Vaqueros_Batch_20240723143405.pdf
Los_Vaqueros_OLCV_20240723143405.pdf
Los_Vaqueros_MBS_20241126125029.pdf

CONFIDENTIAL

Released to Imaging: 3/8/2025 7:45:28 PM

Received by OCD: 3/4/2025 5:41:46 AM

Bleed lines will discharge 100' from WH in non-H2S scenarios and 150' from WH in H2S scenarios.

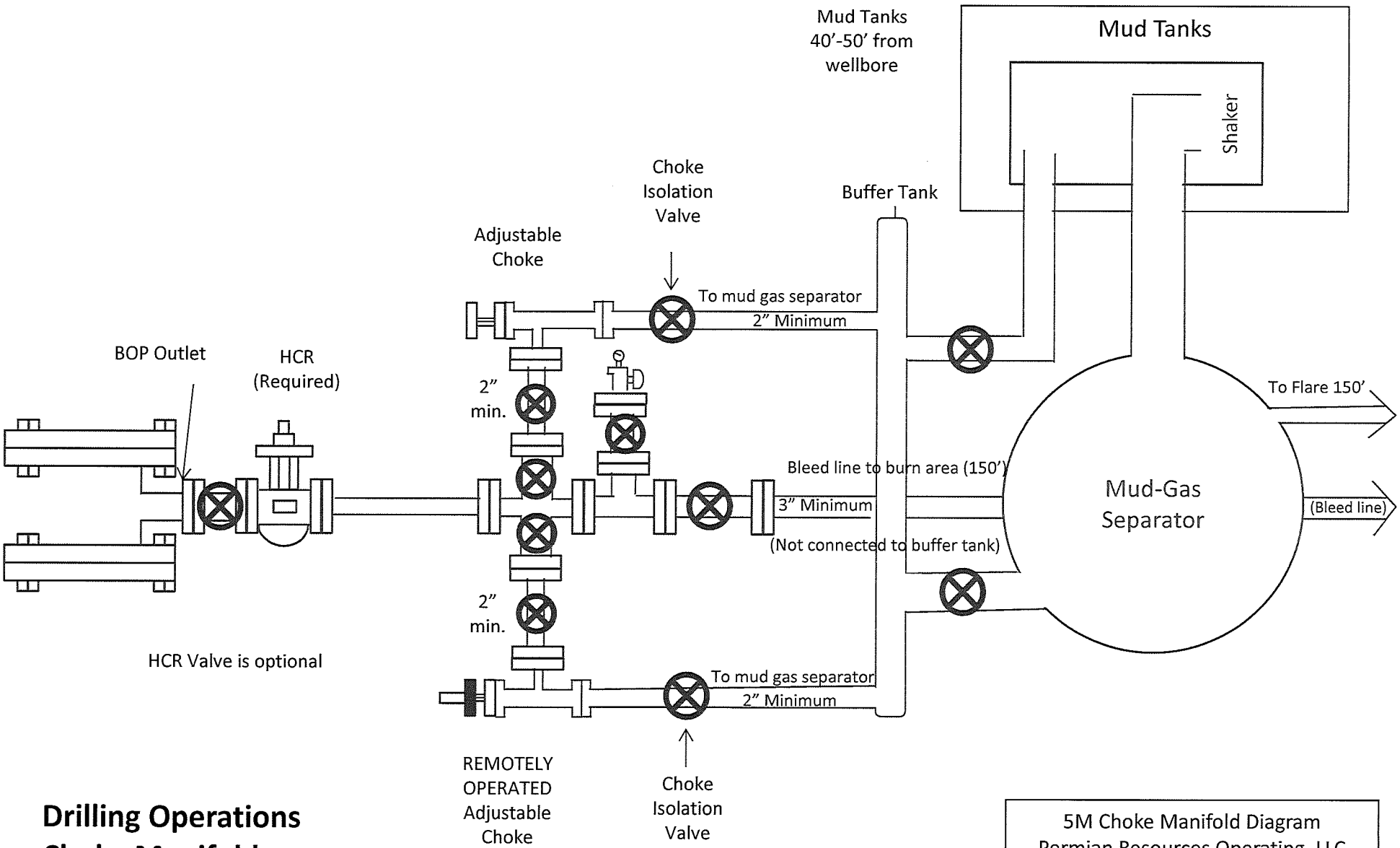

Drilling Operations
Choke Manifold
5M Service

5M Choke Manifold Diagram
Permian Resources Operating, LLC

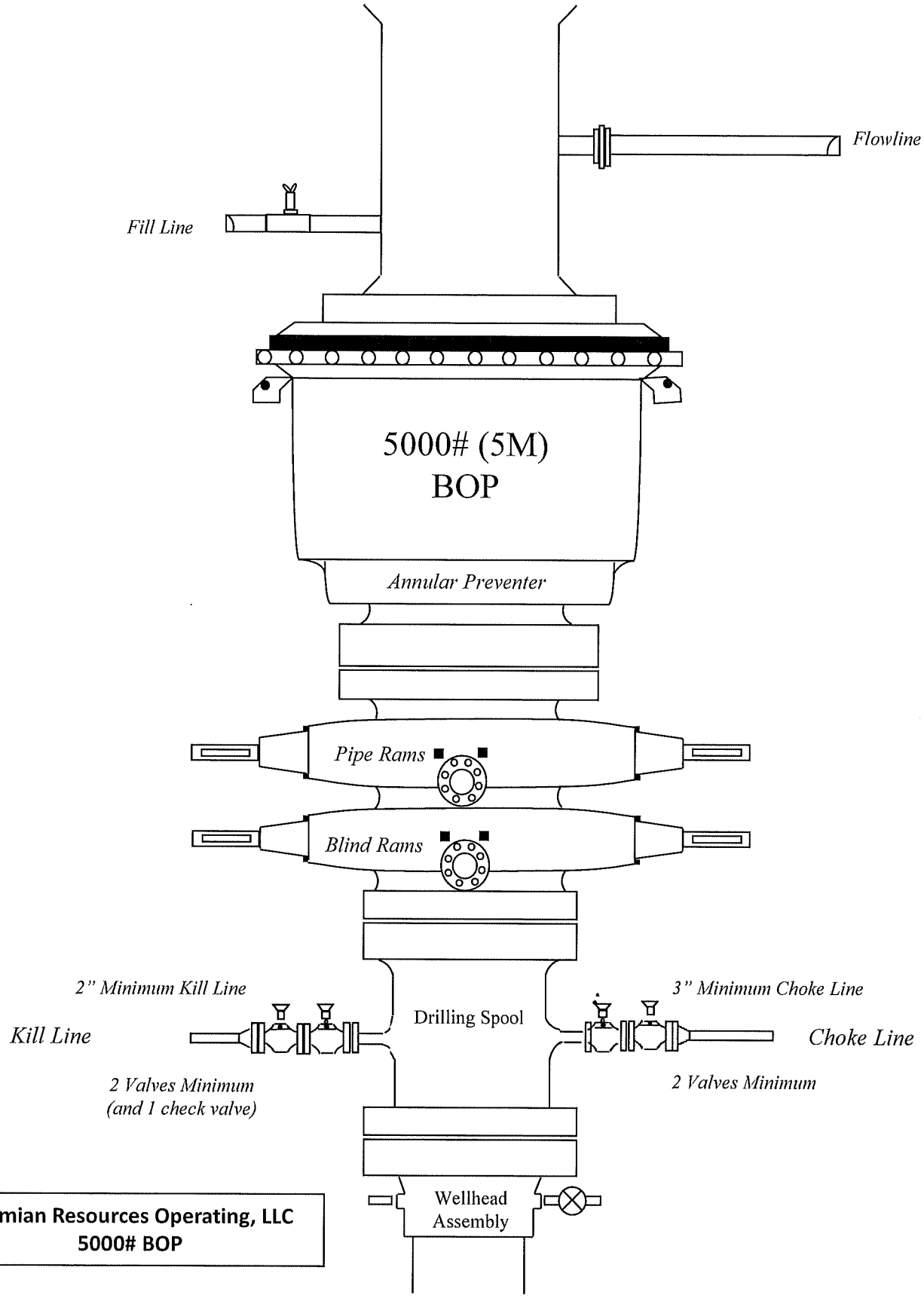

Permian Resources Operating, LLC
5000# BOP

Bleed lines will discharge 100' from WH in non-H2S scenarios and 150' from WH in H2S scenarios.

Metal One Corp. Metal One	GEOCONN-SC Pipe: SeAH P110RY 95%PBW (SMYS110ksi) *1 Coupling: P110RY (SMYS110ksi) Connection Data Sheet	Page	MAI GC 5.5 17 SeAH P110RY 95%RBW+SC-Cplg6.050 P110RY
		Date	3-Feb-21
		Rev.	0

Geometry

GEOCONN-SC

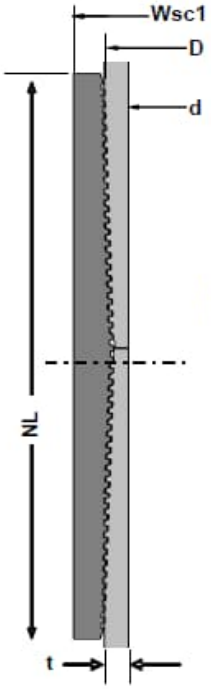

Pipe Body

	Imperial		S.I.	
Grade *1	P110RY	-	P110RY	-
SMYS	110	ksi	110	ksi
Pipe OD (D)	5.500	in	139.70	mm
Weight	17.00	lb/ft	25.33	kg/m
Wall Thickness (t)	0.304	in	7.72	mm
Pipe ID (d)	4.892	in	124.26	mm
Drift Dia.	4.767	in	121.08	mm

Connection

Coupling SMYS	110	ksi	110	ksi
SC-Coupling OD (Wsc1)	6.050	in	153.67	mm
Coupling Length (NL)	8.350	in	212.09	mm
Make up Loss	4.125	in	104.78	mm
Pipe Critical Area	4.96	in^2	3,202	mm^2
Box Critical Area	6.10	in^2	3,937	mm^2
Thread Taper	1 / 16 (3/4" per ft)			
Number of Threads	5 TPI			

Performance

Performance Properties for Pipe Body

	Imperial		S.I.	
S.M.Y.S. *1	546	kips	2,428	kN
M.I.Y.P. *1	11,550	psi	79.66	MPa
Collapse Strength *1	7,480	psi	51.59	MPa

Note S.M.Y.S.= Specified Minimum YIELD Strength of Pipe body
M.I.Y.P. = Minimum Internal Yield Pressure of Pipe body

*1: SeAH P110RY 95%RBW: SMYS110ksi, MIYP11,550psi

Performance Properties for Connection

Min. Connection Joint Strength	100% of S.M.Y.S.
Min. Compression Yield	100% of S.M.Y.S.
Internal Pressure	100% of M.I.Y.P.
External Pressure	100% of Collapse Strength
Max. DLS (deg. /100ft)	>90

Recommended Torque

Min.	10,800	ft-lb	14,600	N-m
Opti.	12,000	ft-lb	16,200	N-m
Max.	13,200	ft-lb	17,800	N-m
Operational Max.	15,600	ft-lb	21,100	N-m

Note : Operational Max. torque can be applied for high torque application

Legal Notice
The use of this information is at the reader/user's risk and no warranty is implied or expressed by Metal One Corporation or its parents, subsidiaries or affiliates (herein collectively referred to as "Metal One") with respect to the use of information contained herein. The information provided on this Connection Data Sheet is for informational purposes only, and was prepared by reference to engineering information that is specific to the subject products, without regard to safety-related factors, all of which are the sole responsibility of the operators and users of the subject connectors. Metal One assumes no responsibility for any errors with respect to this information.

Statements regarding the suitability of products for certain types of applications are based on Metal One's knowledge of typical requirements that are often placed on Metal One products in standard well configurations. Such statements are not binding statements about the suitability of products for a particular application. It is the customer's responsibility to validate that a particular product with the properties described in the product specification is suitable for use in a particular application
The products described in this Connection Data Sheet are not recommended for use in deep water offshore applications. For more information, please refer to http://www.mto.co.jp/mo-conn/_Images/top/WebsiteTerms_Active_20333287_1.pdf the contents of which are incorporated by reference into this Connection Data Sheet.

3. Casing

String	Hole Size	Casing Size	Top	Bottom	Top TVD	Bottom TVD	Length	Grade	Weight	Connection	Collapse SF	Burst SF	Joint SF Type	Joint SF	Body SF Type	Body SF
Surface	17.5	13.375	0	1065	0	1065	1065	J55	54.5	BTC	2.15	1.63	Dry	5.75	Dry	5.40
Intermediate	12.25	9.625	0	5284	0	5284	5284	J55	40	BTC	2.73	1.59	Dry	2.29	Dry	2.02
Production	8.75	5.5	0	11007	0	10650	11007	P110RY	17	GeoConn	1.35	1.41	Dry	1.94	Dry	1.94
Production	7.875	5.5	11007	17993	10650	10650	6986	P110RY	17	GeoConn	1.35	1.41	Dry	1.94	Dry	1.94
								BLM Min Safety Factor			1.125	1		1.6		1.6

Non API casing spec sheets and casing design assumptions attached.

Permian Resources
BOP Break Testing Variance Procedure

Subject: Request for a Variance Allowing break Testing of the Blowout Preventer Equipment (BOPE). Permian Resources requests a variance to ONLY test broken pressure seals on the BOPE and function test BOP when skidding a drilling rig between multiple wells on a pad.

Background

Title 43 CFR 3172, Drilling Operations, Sections 6.b.9.iv states that the BOP test must be performed whenever any seal subject to test pressure is broken. The current interpretation of the Bureau of Land Management (BLM) requires a complete BOP test and not just a test of the affected component. 43 CFR 3172.13, Variances from minimum standards states, "An operator may request the authorized officer to approve a variance from any of the minimum standards prescribed in §§ 3172.6 through 3172.12. All such requests shall be submitted in writing to the appropriate authorized officer and provide information as to the circumstances which warrant approval of the variance(s) requested and the proposed alternative methods by which the related minimum standard(s) are to be satisfied. The authorized officer, after considering all relevant factors, if appropriate, may approve the requested variance(s) if it is determined that the proposed alternative(s) meet or exceed the objectives of the applicable minimum standard(s).". Permian Resources feels the break testing the BOPE is such a situation. Therefore, as per 43 CFR 3172.13, Permian Resources submits this request for the variance.

Supporting Documentation

The language used in 43 CFR 3172 became effective on December 19, 1988 and has remained the standard for regulating BLM onshore drilling operations for over 30 years. During this time, there have been significant changes in drilling technology. The BLM continues to use the variance request process to allow for the use of modern technology and acceptable engineering practices that have arisen since 43 CFR 3172 was originally released. The Permian Resources drilling rig fleet has many modern upgrades that allow the intact BOP stack to be moved between well slots on a multi-well pad, as well as, wellhead designs that incorporate quick connects facilitating release of the BOP from the wellhead without breaking any BOP stack components apart. These technologies have been used extensively offshore, and other regulators, API, and many operators around the world have endorsed break testing as safe and reliable.

Figure 1: Winch System attached to BOP Stack

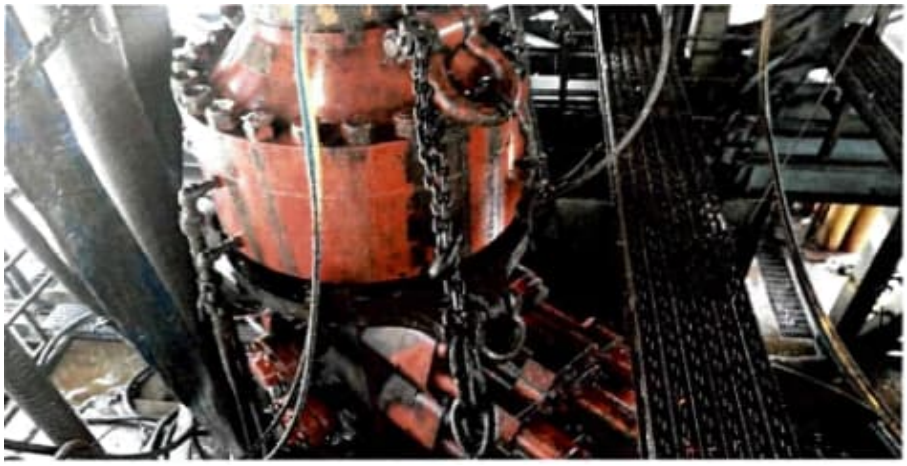

Figure 2: BOP Winch System

American Petroleum Institute (API) standards, specification and recommended practices are considered the industry standard and are consistently utilized and referenced by the industry. 43 CFR 3172 recognizes API recommended Practices (RP) 53 in its original development. API Standard 53, Well Control Equipment Systems for Drilling Wells (Fifth Edition, December 2018, Annex C, Table C.4) recognizes break testing as an acceptable practice. Specifically, API Standard 53, Section 5.3.7.1 states "A pressure test of the pressure containing component shall be performed following the disconnection or repair, limited to the affected component." See Table C.4 below for reference.

62 API STANDARD 53

Table C.4—Initial Pressure Testing, Surface BOP Stacks

Component to be Pressure Tested	Pressure Test—Low Pressure[a,c] psig (MPa)	Pressure Test—High Pressure[a,c]	
		Change Out of Component, Elastomer, or Ring Gasket	No Change Out of Component, Elastomer, or Ring Gasket
Annular preventer[b]	250 to 350 (1.72 to 2.41)	RWP of annular preventer	MASP or 70% annular RWP, whichever is lower.
Fixed pipe, variable bore, blind, and BSR preventers[d,e]	250 to 350 (1.72 to 2.41)	RWP of ram preventer or wellhead system, whichever is lower	ITP
Choke and kill line and BOP side outlet valves below ram preventers (both sides)	250 to 350 (1.72 to 2.41)	RWP of side outlet valve or wellhead system, whichever is lower	ITP
Choke manifold—upstream of chokes[f]	250 to 350 (1.72 to 2.41)	RWP of ram preventers or wellhead system, whichever is lower	ITP
Choke manifold—downstream of chokes[f]	250 to 350 (1.72 to 2.41)	RWP of valve(s), line(s), or MASP for the well program, whichever is lower	
Kelly, kelly valves, drill pipe safety valves, IBOPs	250 to 350 (1.72 to 2.41)	MASP for the well program	

[a] Pressure test evaluation periods shall be a minimum of five minutes.
No visible leaks.
The pressure shall remain stable during the evaluation period. The pressure shall not decrease below the intended test pressure.

[b] Annular(s) and VBR(s) shall be pressure tested on the largest and smallest OD drill pipe to be used in well program.

[c] For pad drilling operations, moving from one wellhead to another within the 21 days, pressure testing is required for pressure-containing and pressure-controlling connections when the integrity of a pressure seal is broken.

[d] For surface offshore operations, the ram BOPs shall be pressure tested with the ram locks engaged and the closing and locking pressure vented during the initial test. For land operations, the ram BOPs shall be pressure tested with the ram locks engaged and the closing and locking pressure vented at commissioning and annually.

[f] Adjustable chokes are not required to be full sealing devices. Pressure testing against a closed choke is not required.

The Bureau of Safety and Environmental Enforcement (BSEE), Department of Interior, has also utilized the API standards, specification and best practices in the development of its offshore oil and gas regulations and incorporates them by reference within its regulations.

Break testing has been approved by the BLM in the past with other operators based on the detailed information provided in this document.

Permian Resources feels break testing and our current procedures meet the intent of 43 CFR 3172 and often exceed it. There has been no evidence that break testing results in more components failing than seen on full BOP tests. Permian Resources internal standards require complete BOPE tests more often than that of 43 CFR 3172 (every 21 days). In addition to function testing the annular, pipe rams and blind rams after each BOP nipple up, Permian Resources performs a choke drill with the rig crew prior to drilling out every casing shoe. This is additional training for the rig crew that exceeds the requirements of 43 CFR 3172.

Procedures

1) Permian Resources will use this document for our break testing plan for New Mexico Delaware Basin. The summary below will be referenced in the APD or Sundry Notice and receive approval prior to implementing this variance.
2) Permian Resources will perform BOP break testing on multi-wells pads where multiple intermediate sections can be drilled and cased within the 21-day BOP test window.
   a)A full BOP test will be conducted on the first well on the pad.
   b)The first intermediate hole section drilled on the pad will be the deepest. All the remaining hole sections will be the same formation depth or shallower.
   c) A full BOP test will be required if the intermediate hole section being drilled has a MASP over 5M.
   d) A full BOP test will be required prior to drilling any production hole.
3) After performing a complete BOP test on the first well, the intermediate hole section will be drilled and cased, two breaks would be made on the BOP equipment.
   a) Between the HCV valve and choke line connection
   b)Between the BOP quick connect and the wellhead
4) The BOP is then lifted and removed from the wellhead by a hydraulic system.
5) After skidding to the next well, the BOP is moved to the wellhead by the same hydraulic system and installed.
6) The connections mentioned in 3a and 3b will then be reconnected.
7) Install test plug into the wellhead using test joint or drill pipe.
8) A shell test is performed against the upper pipe rams testing the two breaks.
9) The shell test will consist of a 250 psi low test and a high test to the value submitted in the APD or Sundry (e.g. 5,000 psi or 10,000psi).
10) Function tests will be performed on the following components: lower pipe rams, blind rams, and annular.
11) For a multi-well pad the same two breaks on the BOP would be made and on the next wells and steps 4 through 10 would be repeated.
12) A second break test would only be done if the intermediate hole section being drilled could not be completed within the 21 day BOP test window.

Note: Picture below highlights BOP components that will be tested during batch operations

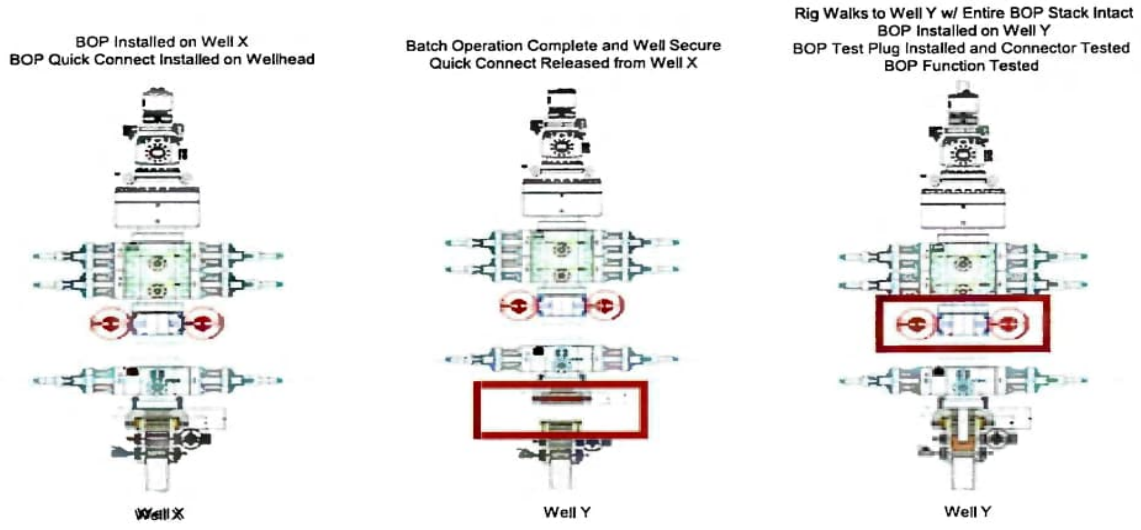

<u>Summary</u>

A variance is requested to ONLY test broken pressure seals on the BOP equipment when moving from wellhead to wellhead which is in compliance with API Standard 53. API Standard 53 states, that for pad drilling operations, moving from one wellhead to another within 21 days, pressure testing is required for pressure-containing and pressure-controlling connections when the integrity of a pressure seal is broken.

The BOP will be secured by a hydraulic carrier or cradle. The BLM will be contacted if a Well Control
event occurs prior to the commencement of a BOPE Break Testing operation.

Based on public data and the supporting documentation submitted herein to the BLM, we will request permission to ONLY retest broken pressure seals if the following conditions are met:

1) After a full BOP test is conducted on the first well on the pad.
2) The first intermediate hole section drilled on the pad will be the deepest. All the remaining hole sections will be the same depth or shallower.
3) A full BOP test will be required if the intermediate hole section being drilled has a MASP over 5M.
4) A full BOP test will be required prior to drilling the production hole.

Only **ONE** test will occur during each break test procedure.

All valves in red including the upper pipe rams will be shut to test the broken connections.

** Each valve on choke manifold will alternate being tested against during each rig skid.

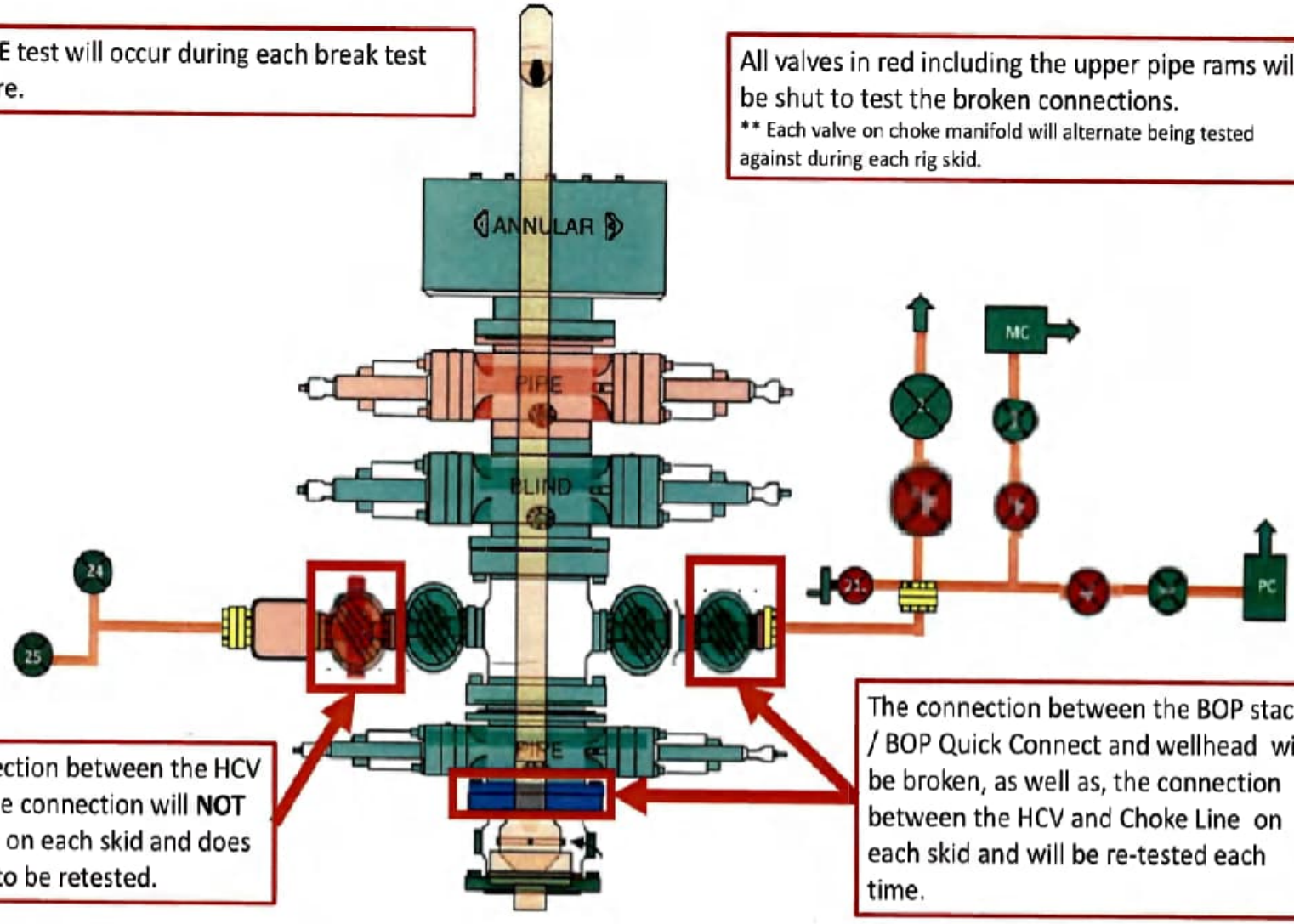

The connection between the HCV and kill line connection will **NOT** be broken on each skid and does not need to be retested.

The connection between the BOP stack / BOP Quick Connect and wellhead will be broken, as well as, the connection between the HCV and Choke Line on each skid and will be re-tested each time.

Continental

ContiTech Fluid Technology

ContiTech Oil & Marine Corp. # 11535 Brittmoore Park Dr., Houston, TX 77041-6916 USA

CONSIGNEE / Ship-to address:

HELMERICH & PAYNE INT'L DRILLING CO
ATTN: FLEX RIG WHSE - B-BAY
210 MAGNOLIA DRIVE
GALENA PARK TX 77547

Buyer:

HELMERICH & PAYNE INT'L DRILLING CO
1437 SOUTH BOULDER
74119 TULSA

Conditions

Incoterms EXW Houston
Ex Works

Packing list / Delivery note

Document No.	**71461553**
Document Date	28.01.2022
Customer Number	11697
Customer VAT No.	
Supplier Number	
Purchase Order No.	740362040
Purchase Order Date	18.01.2022
Sales Order Number	1388153
Sales Order Date	18.01.2022
Unloading Point	
RAN-No.	

Page 1 of 2

Weights (Gross / Net)

Total Gross Weight	2,507.000 LB
Total Net Weight	2,507.000 LB

Item	Material/Description	Quantity	Net Weight	Gross Weight
	Buyer: Jack Peebles *E-mail: Jackie.Peebles@hpinc.com* *Tel: 832-782-6000* *Rig/Whse: HOW*			
20	00RECERTIFY Recert of HP Hoses Serial# 67094 Commodity Code: 3" X 35 FT 10K Choke & Kill Hoses API 16C End 1: 4 - 1/16" 10Kpsi API Spec 6A Type 6BX Flange End 2: 4 - 1/16" 10Kpsi API Spec 6A Type 6BX Flange c/w BX155 ring groove each end Standard: API Spec 16C - Monogrammed Working Pressure: 10,000psi Test Pressure: 15,000psi Inspection & Certification includes: External inspection of the hose & couplings Internal boroscopic inspection of hose liner Hydrostatic pressure test of hose assembly Repair of any external damage to hose body and end connections (limited to minor repairs). Clean & protect end connections Inspection Report Disposal of hose assembly if hose fails inspection and recertification process. Please Flush Hoses before sending them to our Facility.	1 PC	2,507.000 LB	2,507.000 LB

880000240
(Y106-01-01-01)
2.9.22

Record Rotary Hose sleeve number on the CBC Made Hose List !

Continental

ContiTech

Hydrostatic Test Certificate

Certificate Number	COM Order Reference	Customer Name & Address
H100122	1388153	HELMERICH & PAYNE DRILLING CO 1434 SOUTH BOULDER AVE TULSA, OK 74119 USA
Customer Purchase Order No:	740362040	
Project:		

Test Center Address	Accepted by COM Inspection		Accepted by Client Inspection
ContiTech Oil & Marine Corp. 11535 Brittmoore Park Drive Houston, TX 77041 USA	Signed: Date:	Gerson Mejia-Lazo 02/09/22	

We certify that the goods detailed hereon have been inspected as described below by our Quality Management System, and to the best of our knowledge are found to conform the requirements of the above referenced purchase order as issued to ContiTech Oil & Marine Corporation.

Item	Part No.	Description	Qnty	Serial Number	Work. Press. (psi)	Test Press. (psi)	Test Time (minutes)
20	RECERTIFICATION	3" ID 10K Choke and Kill Hose x 35ft OAL	1	67094	10,000	15,000	60

Record Information	
Start Time	1/27/2022 13:21:21
End Time	1/27/2022 14:38:28
Interval	00:01:00
Number	78
MaxValue	15849
MinValue	-3
AvgValue	14240
RecordName	67094-sh
RecordNumber	199

Gauge Information	
Model	ADT680
SN	21817380014
Range	(0-40000)psi
Unit	psi

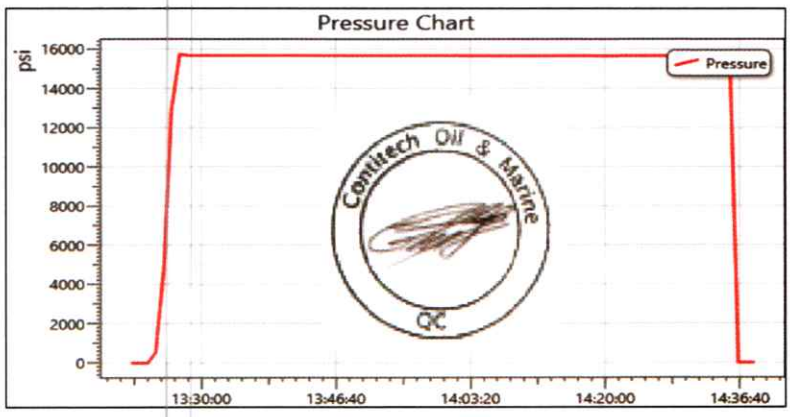

Permian Resources
Multi-Well Pad Batch Drilling Procedure

Surface Casing - PR intends to Batch set all surface casing to a depth approved in the APD. Surface Holes will be batch drilled by a rig. Appropriate notifications will be made prior to spudding the well, running and cementing casing and prior to skidding to the rig to the next well on pad.

1. Drill Surface hole to Approved Depth with Rig and perform wellbore cleanup cycles. Trip out and rack back drilling BHA.
2. Run and land planned surface casing see Illustration 1-1 Below to depth approved in APD.
3. Set packoff and test to 5k psi
4. Offline Cement
5. Install wellhead with pressure gauge and nightcap. Nightcap is shown on final wellhead Stack up Illustration #2-2.
6. Skid Rig to adjacent well to drill Surface hole.
7. Surface casing test will be performed by the rig in order to allow ample time for Cement to develop 500psi compressive strength. Casing test to 0.22 psi/ft or 1500 psi whichever is greater - not to exceed 70% casing burst.

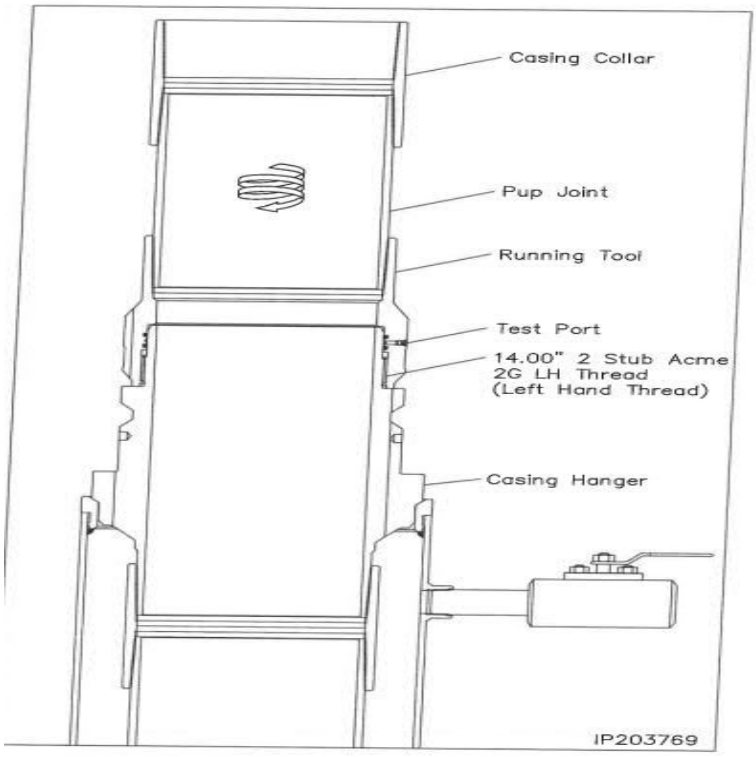

Illustration 1-1

Intermediate Casing – PR intends to Batch set all intermediate casing strings to a depth approved in the APD. Intermediate Holes will be batch drilled by the rig. Appropriate notifications will be made prior to testing BOPE, and prior to running/cementing all casing strings.

1. Rig will remove the nightcap and install and test BOPE.
2. Test Surface casing per COA WOC timing (.22 psi/ft or 1500 psi whichever is greater) - not to exceed 70% casing burst. Cement must have achieved 500psi compressive strength prior to test.
3. Install wear bushing then drill out surface casing shoe-track plus 20' and conduct FIT to minimum of the MW equivalent anticipated to control the formation pressure to the next casing point.
4. Drill Intermediate hole to approved casing point. Trip out of hole with BHA to run Casing.
5. Remove wear bushing then run and land Intermediate Casing with mandrel hanger in wellhead.
6. Cement casing to surface with floats holding.
7. Washout stack then run wash tool in wellhead and wash hanger and pack-off setting area.
8. Install pack-off and test void to 5,000 psi for 15 minutes. Nightcap shown on final wellhead stack up illustration 2-2 on page 3.
9. Test casing per COA WOC timing (.22 psi/ft or 1500 psi whichever is greater) - not to exceed 70% casing burst. Cement must have achieved 500psi compressive strength prior to test.
10. Install nightcap – skid rig to adjacent well to drill Intermediate hole.

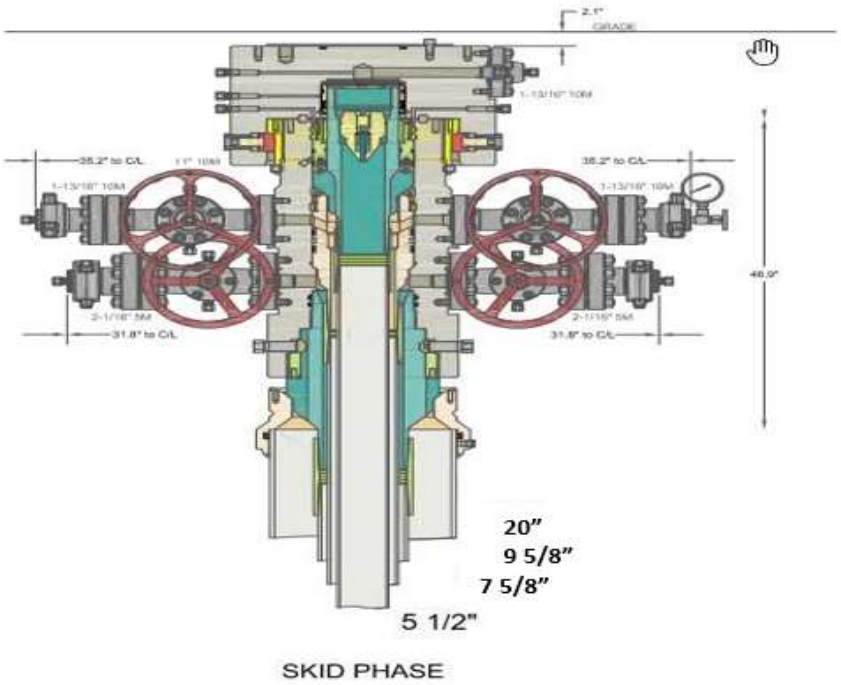

Illustration 2-2

Production Casing – PR intends to Batch set all Production casings with Rig. Appropriate notifications will be made prior Testing BOPE, and prior to running/cementing all casing strings.

1. Drilling Rig will remove the nightcap and install and test BOPE.
2. Install wear bushing then drill Intermediate shoe-track plus 20' and conduct FIT to minimum MW equivalent to control the formation pressure to TD of well.
3. Drill Vertical hole to KOP – Trip out for Curve BHA.
4. Drill Curve, landing in production interval – Trip for Lateral BHA.
5. Drill Lateral / Production hole to Permitted BHL, perform cleanup cycles and trip out to run Production Casing.
6. Remove wear bushing then run Production casing to TD landing casing mandrel in wellhead.
7. Cement Production string with floats holding.
8. Run in with wash tool and wash wellhead area – install pack-off and test void to 5,000psi for 15 minutes.
9. Install BPV in Production mandrel hanger – Nipple down BOPE and install nightcap.
10. Test nightcap void to 5,000 psi for 30 minutes per illustration 2-2
11. Skid rig to adjacent well on pad to drill production hole.

Permian Resources Offline Cementing Procedure
Surface & Intermediate Casing

1. Drill hole to Total Depth with Rig and perform wellbore cleanup cycles.
2. Run and casing to Depth.
3. Land casing with mandrel.
4. Circulate 1.5 csg capacity.
5. Flow test – Confirm well is static and floats are holding.
6. Set Annular packoff and pressure test. Test to 5k.
7. Nipple down BOP and install cap flange.
8. Skid rig to next well on pad
9. Remove cap flange (confirm well is static before removal)
    a) If well is not static use the casing outlet valves to kill well
    b) Drillers method will be used in well control event
    c) High pressure return line will be rigged up to lower casing valve and run to choke manifold to control annular pressure
    d) Kill mud will be circulated once influx is circulated out of hole
    e) Confirm well is static and remove cap flange to start offline cement operations
10. Install offline cement tool.
11. Rig up cementers.
12. Circulate bottoms up with cement truck
13. Commence planned cement job, take returns through the annulus wellhead valve
14. After plug is bumped confirm floats hold and well is static
15. Rig down cementers and equipment
16. Install night cap with pressure gauge to monitor.

13 3/8" Surface

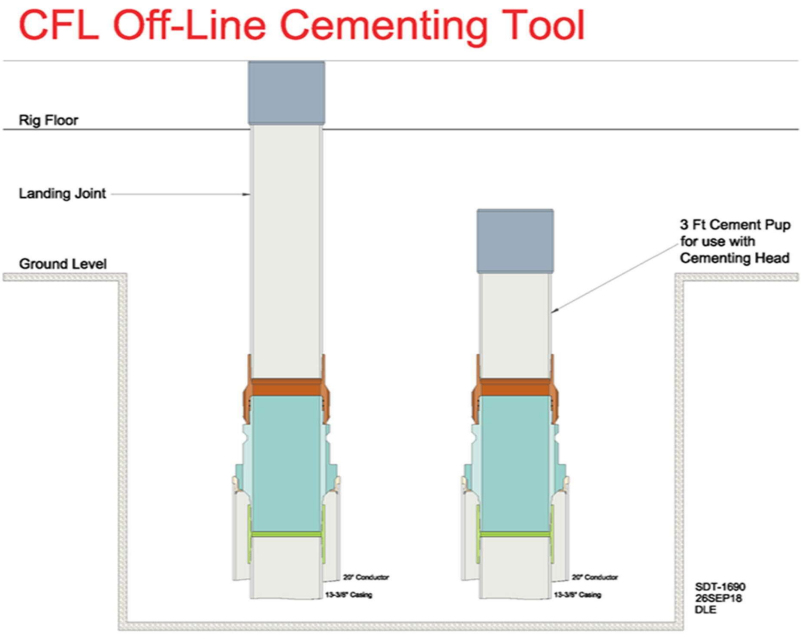

Intermediate

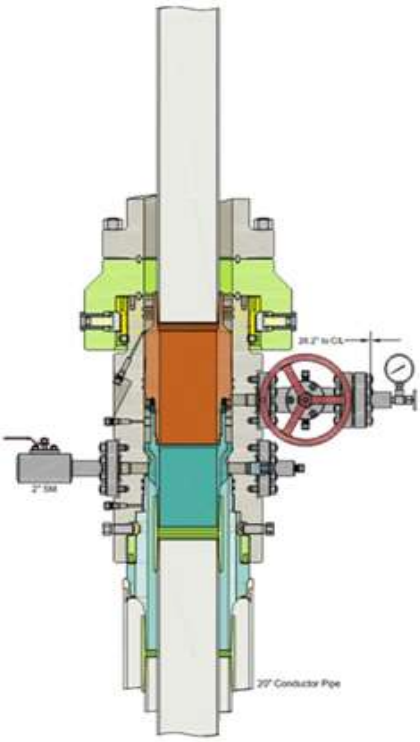

Run 7 5/8" Casing
Land Casing on 7 5/8" Mandrel Hanger
Cement 7 5/8" Casing
Retrieve Running Tool

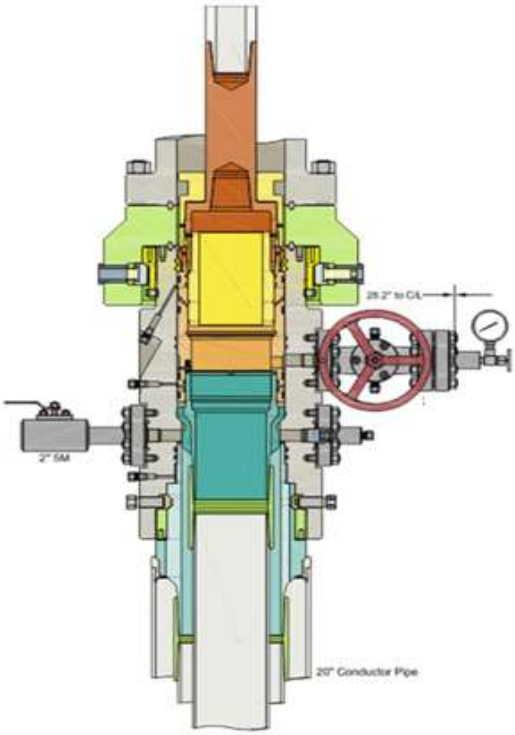

Run 9 5/8" Packoff
Test Upper and Lower Seals
Engage Lockring
Retrieve Running Tool

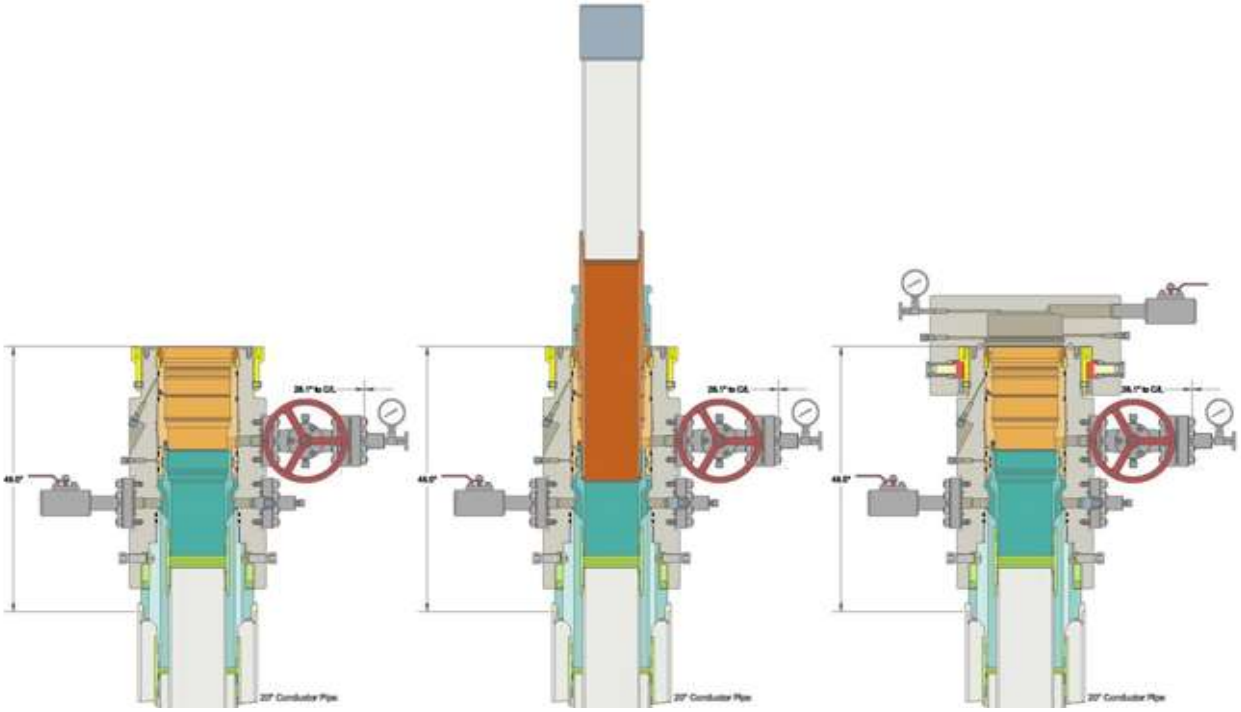

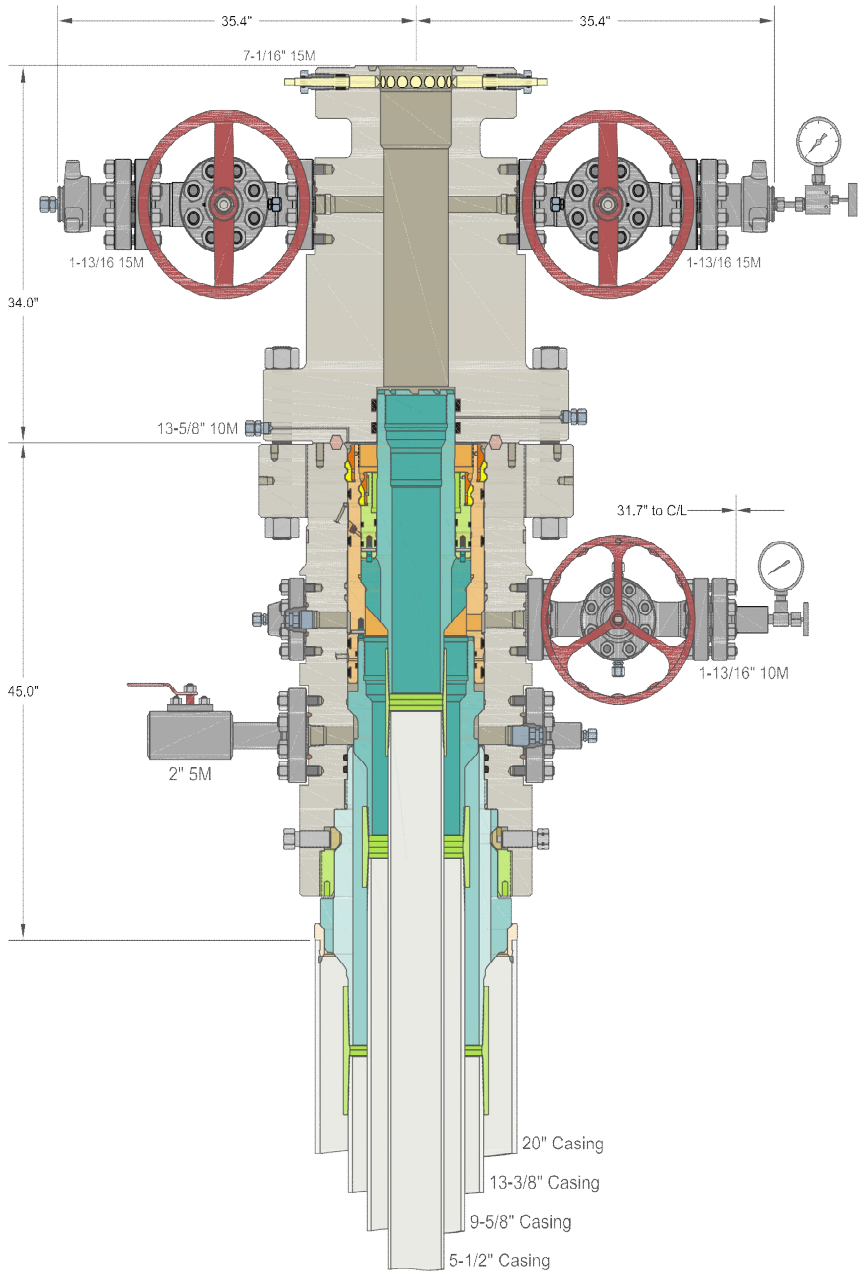

INFORMATION CONTAINED HEREIN IS THE PROPERTY OF CACTUS WELLHEAD, LLC. REPRODUCTION, DISCLOSURE, OR USE THEREOF IS PERMISSIBLE ONLY AS PROVIDED BY CONTRACT OR AS EXPRESSLY AUTHORIZED BY CACTUS WELLHEAD, LLC.

ALL DIMENSIONS APPROXIMATE

CACTUS WELLHEAD LLC	CENTENNIAL RESOURCE DEVELOPMENT LEE CO, NM		
20" x 13-3/8" x 9-5/8" x 5-1/2" 10M MBU-3T-CFL-R-DBLO System With 13-5/8" 10M x 7-1/16" 15M CTH-DBLHPS Tubing Head, 20" Landing Ring & Pin Down Mandrel Casing Hangers	DRAWN	DLE	10JUN20
	APPRV		
	DRAWING NO.	HBE0000338	

PECOS DISTRICT
DRILLING CONDITIONS OF APPROVAL

OPERATOR'S NAME:	Permian Resources Operating LLC
WELL NAME & NO.:	Los Vaqueros Federal 111H
LOCATION:	Sec 30-26S-35E-NMP
COUNTY:	Lea County, New Mexico

COA

H_2S	◉ No		○ Yes	
Potash / WIPP	◉ None	○ Secretary	○ R-111-Q	☐ Open Annulus ☐ WIPP
Cave / Karst	◉ Low	○ Medium	○ High	○ Critical
Wellhead	○ Conventional	◉ Multibowl	○ Both	○ Diverter
Cementing	☐ Primary Squeeze	☐ Cont. Squeeze	☐ EchoMeter	☐ DV Tool
Special Req	☐ Capitan Reef	☐ Water Disposal	☐ COM	☐ Unit
Waste Prev.	○ Self-Certification	◉ Waste Min. Plan	○ APD Submitted prior to 06/10/2024	
Additional Language	☑ Flex Hose ☐ Four-String	☐ Casing Clearance ☑ Offline Cementing	☐ Pilot Hole ☑ Fluid-Filled	☑ Break Testing

A. HYDROGEN SULFIDE

Hydrogen Sulfide (H2S) monitors shall be installed prior to drilling out the surface shoe. If H2S is detected in concentrations greater than 100 ppm, the Hydrogen Sulfide area shall meet 43 CFR 3176 requirements, which includes equipment and personnel/public protection items. If Hydrogen Sulfide is encountered, provide measured values and formations to the BLM.

B. CASING

1. The **13-3/8** inch surface casing shall be set at approximately **1150** feet (a minimum of 25 feet (Lea County) into the Rustler Anhydrite, above the salt, and below usable fresh water) and cemented to the surface. ***Set depth adjusted per BLM geologist.***

    a. If cement does not circulate to the surface, the appropriate BLM office shall be notified and a temperature survey utilizing an electronic type temperature survey with surface log readout will be used or a cement bond log shall be run to verify the top of the cement. Temperature survey will be run a minimum of six hours after pumping cement and ideally between 8-10 hours after completing the cement job.
    b. Wait on cement (WOC) time for a primary cement job will be a minimum of **8 hours** or **500 pounds compressive strength**, whichever is greater. (This is to include the lead cement)
    c. Wait on cement (WOC) time for a remedial job will be a minimum of 4 hours after bringing cement to surface or 500 pounds compressive strength, whichever is greater.

d. If cement falls back, remedial cementing will be done prior to drilling out that string.

Intermediate casing must be kept fluid filled to meet BLM minimum collapse requirement.

2. The minimum required fill of cement behind the **9-5/8** inch intermediate casing is:

   - Cement to surface. If cement does not circulate see B.1.a, c-d above. **Wait on cement (WOC) time for a primary cement job is to include the lead cement slurry due to cave/karst, Capitan Reef, or potash.**

3. The minimum required fill of cement behind the **5-1/2** inch production casing is:

   - Cement should tie-back at least **200 feet** into previous casing string. Operator shall provide method of verification. **Wait on cement (WOC) time for a primary cement job is to include the lead cement slurry due to cave/karst, Capitan Reef, or potash.**

C. PRESSURE CONTROL

1. Variance approved to use flex line from BOP to choke manifold. Manufacturer's specification to be readily available. No external damage to flex line. Flex line to be installed as straight as possible (no hard bends).

2. Operator has proposed a multi-bowl wellhead assembly. Minimum working pressure of the blowout preventer (BOP) and related equipment (BOPE) required for drilling below the surface casing shoe shall be **5000 (5M)** psi.

   a. Wellhead shall be installed by manufacturer's representatives, submit documentation with subsequent sundry.
   b. If the welding is performed by a third party, the manufacturer's representative shall monitor the temperature to verify that it does not exceed the maximum temperature of the seal.
   c. Manufacturer representative shall install the test plug for the initial BOP test.
   d. If the cement does not circulate and one-inch operations would have been possible with a standard wellhead, the well head shall be cut off, cementing operations performed and another wellhead installed.
   e. Whenever any seal subject to test pressure is broken, all the tests in 43 CFR 3172 must be followed.

D. SPECIAL REQUIREMENT (S)

<u>BOPE Break Testing Variance</u>

- BOPE Break Testing is ONLY permitted for intervals utilizing a 5M BOPE or less. **(Annular preventer must be tested to a minimum of 70% of BOPE working pressure and shall be higher than the MASP.)**
- BOPE Break Testing is NOT permitted to drilling the production hole section.
- Variance only pertains to the intermediate hole-sections and no deeper than the Bone Springs formation.
- While in transfer between wells, the BOPE shall be secured by the hydraulic carrier or cradle.

- Any well control event while drilling require notification to the BLM Petroleum Engineer **(575-706-2779)** prior to the commencement of any BOPE Break Testing operations.
- A full BOPE test is required prior to drilling the first deep intermediate hole section. If any subsequent hole interval is deeper than the first, a full BOPE test will be required. (200' TVD tolerance between intermediate shoes is allowable).
- The BLM is to be contacted (575-689-5981 Lea County) 4 hours prior to BOPE tests.
- As a minimum, a full BOPE test shall be performed at 21-day intervals.
- In the event any repairs or replacement of the BOPE is required, the BOPE shall test as per **43 CFR 3172**.
- If in the event break testing is not utilized, then a full BOPE test would be conducted.

Offline Cementing
Contact the BLM prior to the commencement of any offline cementing procedure.

GENERAL REQUIREMENTS

The BLM is to be notified in advance for a representative to witness:

a. Spudding well (minimum of 24 hours)
b. Setting and/or Cementing of all casing strings (minimum of 4 hours)
c. BOPE tests (minimum of 4 hours)

Contact Lea County Petroleum Engineering Inspection Staff:
Call the Hobbs Field Station, 414 West Taylor, Hobbs NM 88240, (575) 689-5981

1. Unless the production casing has been run and cemented or the well has been properly plugged, the drilling rig shall not be removed from over the hole without prior approval.
    a. In the event the operator has proposed to drill multiple wells utilizing a skid/walking rig. Operator shall secure the wellbore on the current well, after installing and testing the wellhead, by installing a blind flange of like pressure rating to the wellhead and a pressure gauge that can be monitored while drilling is performed on the other well(s).
    b. When the operator proposes to set surface casing with Spudder Rig
        i. Notify the BLM when moving in and removing the Spudder Rig.
        ii. Notify the BLM when moving in the 2nd Rig. Rig to be moved in within 90 days of notification that Spudder Rig has left the location.
        iii. BOP/BOPE test to be conducted per **43 CFR 3172** as soon as 2nd Rig is rigged up on well.
2. Floor controls are required for 3M or Greater systems. These controls will be on the rig floor, unobstructed, readily accessible to the driller and will be operational at all times during drilling and/or completion activities. Rig floor is defined as the area immediately around the rotary table; the area immediately above the substructure on which the draw works are located, this does not include the dog house or stairway area.
3. For intervals in which cement to surface is required, cement to surface should be verified with a visual check and density or pH check to differentiate cement from spacer and drilling mud. The results should be documented in the driller's log and daily reports.

A. CASING

1. Changes to the approved APD casing program need prior approval if the items substituted are of lesser grade or different casing size or are Non-API. The Operator can exchange the components of the proposal with that of superior strength (i.e. changing from J-55 to N-80, or from 36# to 40#). Changes to the approved cement program need prior approval if the altered cement plan has less volume or strength or if the changes are substantial (i.e. Multistage tool, ECP, etc.). The initial wellhead installed on the well will remain on the well with spools used as needed.
2. <u>Wait on cement (WOC) for Potash Areas:</u> After cementing but before commencing any tests, the casing string shall stand cemented under pressure until both of the following

conditions have been met: 1) cement reaches a minimum compressive strength of 500 psi for all cement blends of both lead and tail cement, 2) until cement has been in place at least 8 hours. WOC time will be recorded in the driller's log. The casing integrity test can be done (prior to the cement setting up) immediately after bumping the plug.

3. Wait on cement (WOC) for Water Basin: After cementing but before commencing any tests, the casing string shall stand cemented under pressure until both of the following conditions have been met: 1) cement reaches a minimum compressive strength of 500 psi at the shoe, 2) until cement has been in place at least 8 hours. WOC time will be recorded in the driller's log. See individual casing strings for details regarding lead cement slurry requirements. The casing integrity test can be done (prior to the cement setting up) immediately after bumping the plug.
4. Provide compressive strengths including hours to reach required 500 pounds compressive strength prior to cementing each casing string. Have well specific cement details onsite prior to pumping the cement for each casing string.
5. No pea gravel permitted for remedial or fall back remedial without prior authorization from the BLM engineer.
6. On that portion of any well approved for a 5M BOPE system or greater, a pressure integrity test of each casing shoe shall be performed. Formation at the shoe shall be tested to a minimum of the mud weight equivalent anticipated to control the formation pressure to the next casing depth or at total depth of the well. This test shall be performed before drilling more than 20 feet of new hole.
7. If hardband drill pipe is rotated inside casing, returns will be monitored for metal. If metal is found in samples, drill pipe will be pulled and rubber protectors which have a larger diameter than the tool joints of the drill pipe will be installed prior to continuing drilling operations.
8. Whenever a casing string is cemented in the R-111-Q potash area, the NMOCD requirements shall be followed.

B. PRESSURE CONTROL

1. All blowout preventer (BOP) and related equipment (BOPE) shall comply with well control requirements as described in **43 CFR 3172**.
2. If a variance is approved for a flexible hose to be installed from the BOP to the choke manifold, the following requirements apply: The flex line must meet the requirements of API 16C. Check condition of flexible line from BOP to choke manifold, replace if exterior is damaged or if line fails test. Line to be as straight as possible with no hard bends and is to be anchored according to Manufacturer's requirements. The flexible hose can be exchanged with a hose of equal size and equal or greater pressure rating. Anchor requirements, specification sheet and hydrostatic pressure test certification matching the hose in service, to be onsite for review. These documents shall be posted in the company man's trailer and on the rig floor.

3. 5M or higher system requires an HCR valve, remote kill line and annular to match. The remote kill line is to be installed prior to testing the system and tested to stack pressure.
4. If the operator has proposed a multi-bowl wellhead assembly in the APD. The following requirements must be met:
    i. Wellhead shall be installed by manufacturer's representatives, submit documentation with subsequent sundry.
    ii. If the welding is performed by a third party, the manufacturer's representative shall monitor the temperature to verify that it does not exceed the maximum temperature of the seal.
    iii. Manufacturer representative shall install the test plug for the initial BOP test.
    iv. Whenever any seal subject to test pressure is broken, all the tests in 43 CFR 3172.6(b)(9) must be followed.
    v. If the cement does not circulate and one inch operations would have been possible with a standard wellhead, the well head shall be cut off, cementing operations performed and another wellhead installed.
5. The appropriate BLM office shall be notified a minimum of 4 hours in advance for a representative to witness the tests.
    i. In a water basin, for all casing strings utilizing slips, these are to be set as soon as the crew and rig are ready and any fallback cement remediation has been done. The casing cut-off and BOP installation can be initiated four hours after installing the slips, which will be approximately six hours after bumping the plug. For those casing strings not using slips, the minimum wait time before cut-off is eight hours after bumping the plug. BOP/BOPE testing can begin after cut-off or once cement reaches 500 psi compressive strength (including lead cement), whichever is greater. However, if the float does not hold, cut-off cannot be initiated until cement reaches 500 psi compressive strength (including lead when specified).
    ii. In potash areas, for all casing strings utilizing slips, these are to be set as soon as the crew and rig are ready and any fallback cement remediation has been done. For all casing strings, casing cut-off and BOP installation can be initiated at twelve hours after bumping the cement plug. The BOPE test can be initiated after bumping the cement plug with the casing valve open. (only applies to single stage cement jobs, prior to the cement setting up.)
    iii. The tests shall be done by an independent service company utilizing a test plug not a cup or J-packer and can be initiated immediately with the casing valve open. The operator also has the option of utilizing an independent tester to test without a plug (i.e. against the casing) pursuant to **43 CFR 3172** with the pressure not to exceed 70% of the burst rating for the casing. Any test against the casing must meet the WOC time for 8 hours or 500 pounds compressive strength, whichever is greater, prior to initiating the test (see casing segment as lead cement may be critical item).

iv. The test shall be run on a 5000 psi chart for a 2-3M BOP/BOP, on a 10000 psi chart for a 5M BOP/BOPE and on a 15000 psi chart for a 10M BOP/BOPE. If a linear chart is used, it shall be a one hour chart. A circular chart shall have a maximum 2 hour clock. If a twelve hour or twenty-four hour chart is used, tester shall make a notation that it is run with a two hour clock.
v. The results of the test shall be reported to the appropriate BLM office.
vi. All tests are required to be recorded on a calibrated test chart. A copy of the BOP/BOPE test chart and a copy of independent service company test will be submitted to the appropriate BLM office.
vii. The BOP/BOPE test shall include a low pressure test from 250 to 300 psi. The test will be held for a minimum of 10 minutes if test is done with a test plug and 30 minutes without a test plug. This test shall be performed prior to the test at full stack pressure.
viii. BOP/BOPE must be tested by an independent service company within 500 feet of the top of the Wolfcamp formation if the time between the setting of the intermediate casing and reaching this depth exceeds 20 days. This test does not exclude the test prior to drilling out the casing shoe as per **43 CFR 3172**.

C. DRILLING MUD

Mud system monitoring equipment, with derrick floor indicators and visual and audio alarms, shall be operating before drilling into the Wolfcamp formation, and shall be used until production casing is run and cemented.

D. WASTE MATERIAL AND FLUIDS

All waste (i.e. drilling fluids, trash, salts, chemicals, sewage, gray water, etc.) created as a result of drilling operations and completion operations shall be safely contained and disposed of properly at a waste disposal facility. No waste material or fluid shall be disposed of on the well location or surrounding area. Porto-johns and trash containers will be on-location during fracturing operations or any other crew-intensive operations.

NEW MEXICO

(SP) LEA
LOS VAQUEROS FED PROJECT
LOS VAQUEROS FED 111H

OWB

Plan: PWP0

Standard Planning Report - Geographic

10 July, 2024

Planning Report - Geographic

Database:	Compass_17	**Local Co-ordinate Reference**	Well LOS VAQUEROS FED 111H
Company:	NEW MEXICO	**TVD Reference:**	KB @ 3217.2usft
Project:	(SP) LEA	**MD Reference:**	KB @ 3217.2usft
Site:	LOS VAQUEROS FED PROJECT	**North Reference:**	Grid
Well:	LOS VAQUEROS FED 111H	**Survey Calculation Method:**	Minimum Curvature
Wellbore:	OWB		
Design:	PWP0		

Project (SP) LEA

Map System:	US State Plane 1983	**System Datum:**	Mean Sea Level
Geo Datum:	North American Datum 1983		
Map Zone:	New Mexico Eastern Zone		

Site LOS VAQUEROS FED PROJECT

Site Position:		**Northing:**	372,466.94 usft	**Latitude:**	32° 1' 14.083 N
From:	Map	**Easting:**	829,705.79 usft	**Longitude:**	103° 24' 10.395 W
Position Uncertainty:	0.0 usft	**Slot Radius:**	13-3/16 "		

Well LOS VAQUEROS FED 111H

Well Position	**+N/-S**	0.0 usft	**Northing:**	372,593.80 usft	**Latitude:**	32° 1' 15.520 N
	+E/-W	0.0 usft	**Easting:**	827,569.07 usft	**Longitude:**	103° 24' 35.199 W
Position Uncertainty		0.0 usft	**Wellhead Elevation:**	usft	**Ground Level:**	3,187.2 usft
Grid Convergence:		0.49 °				

Wellbore OWB

Magnetics	Model Name	Sample Date	Declination (°)	Dip Angle (°)	Field Strength (nT)
	IGRF200510	12/31/2009	7.66	60.08	48,690.20977299

Design PWP0

Audit Notes:

Version:	**Phase:**	PROTOTYPE	**Tie On Depth:**	0.0

Vertical Section:	Depth From (TVD) (usft)	+N/-S (usft)	+E/-W (usft)	Direction (°)
	0.0	0.0	0.0	187.14

Plan Survey Tool Program **Date** 7/10/2024

	Depth From (usft)	Depth To (usft)	Survey (Wellbore)	Tool Name	Remarks
1	0.0	17,993.9	PWP0 (OWB)	MWD OWSG_Rev2_ MWD - Standa	

Plan Sections

Measured Depth (usft)	Inclination (°)	Azimuth (°)	Vertical Depth (usft)	+N/-S (usft)	+E/-W (usft)	Dogleg Rate (°/100usft)	Build Rate (°/100usft)	Turn Rate (°/100usft)	TFO (°)	Target
0.0	0.00	0.00	0.0	0.0	0.0	0.00	0.00	0.00	0.00	
2,000.0	0.00	0.00	2,000.0	0.0	0.0	0.00	0.00	0.00	0.00	
2,500.0	10.00	271.51	2,497.5	1.1	-43.5	2.00	2.00	0.00	271.51	
7,739.4	10.00	271.51	7,657.3	25.1	-953.0	0.00	0.00	0.00	0.00	
8,239.4	0.00	0.00	8,154.8	26.2	-996.5	2.00	-2.00	0.00	180.00	
10,257.2	0.00	0.00	10,172.5	26.2	-996.5	0.00	0.00	0.00	0.00	
11,007.2	90.00	179.50	10,650.0	-451.2	-992.4	12.00	12.00	23.93	179.50	
17,993.9	90.00	179.50	10,650.0	-7,437.7	-931.9	0.00	0.00	0.00	0.00	LTP BHL LVF 111H

Planning Report - Geographic

Database:	Compass_17	**Local Co-ordinate Reference**	Well LOS VAQUEROS FED 111H
Company:	NEW MEXICO	**TVD Reference:**	KB @ 3217.2usft
Project:	(SP) LEA	**MD Reference:**	KB @ 3217.2usft
Site:	LOS VAQUEROS FED PROJECT	**North Reference:**	Grid
Well:	LOS VAQUEROS FED 111H	**Survey Calculation Method:**	Minimum Curvature
Wellbore:	OWB		
Design:	PWP0		

Planned Survey

Measured Depth (usft)	Inclination (°)	Azimuth (°)	Vertical Depth (usft)	+N/-S (usft)	+E/-W (usft)	Map Northing (usft)	Map Easting (usft)	Latitude	Longitude
0.0	0.00	0.00	0.0	0.0	0.0	372,593.80	827,569.07	32° 1' 15.520 N	103° 24' 35.199 W
100.0	0.00	0.00	100.0	0.0	0.0	372,593.80	827,569.07	32° 1' 15.520 N	103° 24' 35.199 W
200.0	0.00	0.00	200.0	0.0	0.0	372,593.80	827,569.07	32° 1' 15.520 N	103° 24' 35.199 W
300.0	0.00	0.00	300.0	0.0	0.0	372,593.80	827,569.07	32° 1' 15.520 N	103° 24' 35.199 W
400.0	0.00	0.00	400.0	0.0	0.0	372,593.80	827,569.07	32° 1' 15.520 N	103° 24' 35.199 W
500.0	0.00	0.00	500.0	0.0	0.0	372,593.80	827,569.07	32° 1' 15.520 N	103° 24' 35.199 W
600.0	0.00	0.00	600.0	0.0	0.0	372,593.80	827,569.07	32° 1' 15.520 N	103° 24' 35.199 W
700.0	0.00	0.00	700.0	0.0	0.0	372,593.80	827,569.07	32° 1' 15.520 N	103° 24' 35.199 W
800.0	0.00	0.00	800.0	0.0	0.0	372,593.80	827,569.07	32° 1' 15.520 N	103° 24' 35.199 W
900.0	0.00	0.00	900.0	0.0	0.0	372,593.80	827,569.07	32° 1' 15.520 N	103° 24' 35.199 W
1,000.0	0.00	0.00	1,000.0	0.0	0.0	372,593.80	827,569.07	32° 1' 15.520 N	103° 24' 35.199 W
1,100.0	0.00	0.00	1,100.0	0.0	0.0	372,593.80	827,569.07	32° 1' 15.520 N	103° 24' 35.199 W
1,200.0	0.00	0.00	1,200.0	0.0	0.0	372,593.80	827,569.07	32° 1' 15.520 N	103° 24' 35.199 W
1,300.0	0.00	0.00	1,300.0	0.0	0.0	372,593.80	827,569.07	32° 1' 15.520 N	103° 24' 35.199 W
1,400.0	0.00	0.00	1,400.0	0.0	0.0	372,593.80	827,569.07	32° 1' 15.520 N	103° 24' 35.199 W
1,500.0	0.00	0.00	1,500.0	0.0	0.0	372,593.80	827,569.07	32° 1' 15.520 N	103° 24' 35.199 W
1,600.0	0.00	0.00	1,600.0	0.0	0.0	372,593.80	827,569.07	32° 1' 15.520 N	103° 24' 35.199 W
1,700.0	0.00	0.00	1,700.0	0.0	0.0	372,593.80	827,569.07	32° 1' 15.520 N	103° 24' 35.199 W
1,800.0	0.00	0.00	1,800.0	0.0	0.0	372,593.80	827,569.07	32° 1' 15.520 N	103° 24' 35.199 W
1,900.0	0.00	0.00	1,900.0	0.0	0.0	372,593.80	827,569.07	32° 1' 15.520 N	103° 24' 35.199 W
2,000.0	0.00	0.00	2,000.0	0.0	0.0	372,593.80	827,569.07	32° 1' 15.520 N	103° 24' 35.199 W
Start Build 2.00									
2,100.0	2.00	271.51	2,100.0	0.0	-1.7	372,593.84	827,567.32	32° 1' 15.520 N	103° 24' 35.219 W
2,200.0	4.00	271.51	2,199.8	0.2	-7.0	372,593.98	827,562.09	32° 1' 15.522 N	103° 24' 35.280 W
2,300.0	6.00	271.51	2,299.5	0.4	-15.7	372,594.21	827,553.38	32° 1' 15.525 N	103° 24' 35.381 W
2,400.0	8.00	271.51	2,398.7	0.7	-27.9	372,594.53	827,541.20	32° 1' 15.529 N	103° 24' 35.522 W
2,500.0	10.00	271.51	2,497.5	1.1	-43.5	372,594.94	827,525.56	32° 1' 15.535 N	103° 24' 35.704 W
Start 5239.4 hold at 2500.0 MD									
2,600.0	10.00	271.51	2,595.9	1.6	-60.9	372,595.40	827,508.20	32° 1' 15.541 N	103° 24' 35.906 W
2,700.0	10.00	271.51	2,694.4	2.1	-78.2	372,595.85	827,490.84	32° 1' 15.547 N	103° 24' 36.107 W
2,800.0	10.00	271.51	2,792.9	2.5	-95.6	372,596.31	827,473.48	32° 1' 15.553 N	103° 24' 36.309 W
2,900.0	10.00	271.51	2,891.4	3.0	-112.9	372,596.77	827,456.13	32° 1' 15.559 N	103° 24' 36.510 W
3,000.0	10.00	271.51	2,989.9	3.4	-130.3	372,597.22	827,438.77	32° 1' 15.565 N	103° 24' 36.712 W
3,100.0	10.00	271.51	3,088.3	3.9	-147.7	372,597.68	827,421.41	32° 1' 15.571 N	103° 24' 36.913 W
3,200.0	10.00	271.51	3,186.8	4.3	-165.0	372,598.14	827,404.05	32° 1' 15.576 N	103° 24' 37.115 W
3,300.0	10.00	271.51	3,285.3	4.8	-182.4	372,598.59	827,386.69	32° 1' 15.582 N	103° 24' 37.317 W
3,400.0	10.00	271.51	3,383.8	5.3	-199.7	372,599.05	827,369.33	32° 1' 15.588 N	103° 24' 37.518 W
3,500.0	10.00	271.51	3,482.3	5.7	-217.1	372,599.51	827,351.97	32° 1' 15.594 N	103° 24' 37.720 W
3,600.0	10.00	271.51	3,580.8	6.2	-234.5	372,599.96	827,334.61	32° 1' 15.600 N	103° 24' 37.921 W
3,700.0	10.00	271.51	3,679.2	6.6	-251.8	372,600.42	827,317.26	32° 1' 15.606 N	103° 24' 38.123 W
3,800.0	10.00	271.51	3,777.7	7.1	-269.2	372,600.88	827,299.90	32° 1' 15.612 N	103° 24' 38.324 W
3,900.0	10.00	271.51	3,876.2	7.5	-286.5	372,601.33	827,282.54	32° 1' 15.618 N	103° 24' 38.526 W
4,000.0	10.00	271.51	3,974.7	8.0	-303.9	372,601.79	827,265.18	32° 1' 15.624 N	103° 24' 38.728 W
4,100.0	10.00	271.51	4,073.2	8.4	-321.2	372,602.24	827,247.82	32° 1' 15.630 N	103° 24' 38.929 W
4,200.0	10.00	271.51	4,171.6	8.9	-338.6	372,602.70	827,230.46	32° 1' 15.636 N	103° 24' 39.131 W
4,300.0	10.00	271.51	4,270.1	9.4	-356.0	372,603.16	827,213.10	32° 1' 15.642 N	103° 24' 39.332 W
4,400.0	10.00	271.51	4,368.6	9.8	-373.3	372,603.61	827,195.74	32° 1' 15.648 N	103° 24' 39.534 W
4,500.0	10.00	271.51	4,467.1	10.3	-390.7	372,604.07	827,178.38	32° 1' 15.654 N	103° 24' 39.735 W
4,600.0	10.00	271.51	4,565.6	10.7	-408.0	372,604.53	827,161.03	32° 1' 15.660 N	103° 24' 39.937 W
4,700.0	10.00	271.51	4,664.0	11.2	-425.4	372,604.98	827,143.67	32° 1' 15.666 N	103° 24' 40.139 W
4,800.0	10.00	271.51	4,762.5	11.6	-442.8	372,605.44	827,126.31	32° 1' 15.672 N	103° 24' 40.340 W
4,900.0	10.00	271.51	4,861.0	12.1	-460.1	372,605.90	827,108.95	32° 1' 15.678 N	103° 24' 40.542 W
5,000.0	10.00	271.51	4,959.5	12.6	-477.5	372,606.35	827,091.59	32° 1' 15.684 N	103° 24' 40.743 W

Planning Report - Geographic

Database:	Compass_17	**Local Co-ordinate Reference**	Well LOS VAQUEROS FED 111H
Company:	NEW MEXICO	**TVD Reference:**	KB @ 3217.2usft
Project:	(SP) LEA	**MD Reference:**	KB @ 3217.2usft
Site:	LOS VAQUEROS FED PROJECT	**North Reference:**	Grid
Well:	LOS VAQUEROS FED 111H	**Survey Calculation Method:**	Minimum Curvature
Wellbore:	OWB		
Design:	PWP0		

Planned Survey

Measured Depth (usft)	Inclination (°)	Azimuth (°)	Vertical Depth (usft)	+N/-S (usft)	+E/-W (usft)	Map Northing (usft)	Map Easting (usft)	Latitude	Longitude
5,100.0	10.00	271.51	5,058.0	13.0	-494.8	372,606.81	827,074.23	32° 1' 15.690 N	103° 24' 40.945 W
5,200.0	10.00	271.51	5,156.4	13.5	-512.2	372,607.26	827,056.87	32° 1' 15.696 N	103° 24' 41.146 W
5,300.0	10.00	271.51	5,254.9	13.9	-529.6	372,607.72	827,039.51	32° 1' 15.702 N	103° 24' 41.348 W
5,400.0	10.00	271.51	5,353.4	14.4	-546.9	372,608.18	827,022.16	32° 1' 15.708 N	103° 24' 41.549 W
5,500.0	10.00	271.51	5,451.9	14.8	-564.3	372,608.63	827,004.80	32° 1' 15.714 N	103° 24' 41.751 W
5,600.0	10.00	271.51	5,550.4	15.3	-581.6	372,609.09	826,987.44	32° 1' 15.720 N	103° 24' 41.953 W
5,700.0	10.00	271.51	5,648.9	15.7	-599.0	372,609.55	826,970.08	32° 1' 15.726 N	103° 24' 42.154 W
5,800.0	10.00	271.51	5,747.3	16.2	-616.3	372,610.00	826,952.72	32° 1' 15.732 N	103° 24' 42.356 W
5,900.0	10.00	271.51	5,845.8	16.7	-633.7	372,610.46	826,935.36	32° 1' 15.738 N	103° 24' 42.557 W
6,000.0	10.00	271.51	5,944.3	17.1	-651.1	372,610.92	826,918.00	32° 1' 15.744 N	103° 24' 42.759 W
6,100.0	10.00	271.51	6,042.8	17.6	-668.4	372,611.37	826,900.64	32° 1' 15.750 N	103° 24' 42.960 W
6,200.0	10.00	271.51	6,141.3	18.0	-685.8	372,611.83	826,883.28	32° 1' 15.756 N	103° 24' 43.162 W
6,300.0	10.00	271.51	6,239.7	18.5	-703.1	372,612.29	826,865.93	32° 1' 15.762 N	103° 24' 43.364 W
6,400.0	10.00	271.51	6,338.2	18.9	-720.5	372,612.74	826,848.57	32° 1' 15.768 N	103° 24' 43.565 W
6,500.0	10.00	271.51	6,436.7	19.4	-737.9	372,613.20	826,831.21	32° 1' 15.774 N	103° 24' 43.767 W
6,600.0	10.00	271.51	6,535.2	19.9	-755.2	372,613.65	826,813.85	32° 1' 15.780 N	103° 24' 43.968 W
6,700.0	10.00	271.51	6,633.7	20.3	-772.6	372,614.11	826,796.49	32° 1' 15.786 N	103° 24' 44.170 W
6,800.0	10.00	271.51	6,732.1	20.8	-789.9	372,614.57	826,779.13	32° 1' 15.792 N	103° 24' 44.371 W
6,900.0	10.00	271.51	6,830.6	21.2	-807.3	372,615.02	826,761.77	32° 1' 15.798 N	103° 24' 44.573 W
7,000.0	10.00	271.51	6,929.1	21.7	-824.7	372,615.48	826,744.41	32° 1' 15.804 N	103° 24' 44.775 W
7,100.0	10.00	271.51	7,027.6	22.1	-842.0	372,615.94	826,727.06	32° 1' 15.810 N	103° 24' 44.976 W
7,200.0	10.00	271.51	7,126.1	22.6	-859.4	372,616.39	826,709.70	32° 1' 15.816 N	103° 24' 45.178 W
7,300.0	10.00	271.51	7,224.5	23.1	-876.7	372,616.85	826,692.34	32° 1' 15.822 N	103° 24' 45.379 W
7,400.0	10.00	271.51	7,323.0	23.5	-894.1	372,617.31	826,674.98	32° 1' 15.828 N	103° 24' 45.581 W
7,500.0	10.00	271.51	7,421.5	24.0	-911.4	372,617.76	826,657.62	32° 1' 15.834 N	103° 24' 45.782 W
7,600.0	10.00	271.51	7,520.0	24.4	-928.8	372,618.22	826,640.26	32° 1' 15.840 N	103° 24' 45.984 W
7,700.0	10.00	271.51	7,618.5	24.9	-946.2	372,618.67	826,622.90	32° 1' 15.846 N	103° 24' 46.186 W
7,739.4	10.00	271.51	7,657.3	25.1	-953.0	372,618.85	826,616.06	32° 1' 15.848 N	103° 24' 46.265 W
Start Drop -2.00									
7,800.0	8.79	271.51	7,717.1	25.3	-962.9	372,619.11	826,606.17	32° 1' 15.851 N	103° 24' 46.380 W
7,900.0	6.79	271.51	7,816.1	25.7	-976.4	372,619.47	826,592.63	32° 1' 15.856 N	103° 24' 46.537 W
8,000.0	4.79	271.51	7,915.6	25.9	-986.5	372,619.74	826,582.55	32° 1' 15.860 N	103° 24' 46.654 W
8,100.0	2.79	271.51	8,015.4	26.1	-993.1	372,619.91	826,575.94	32° 1' 15.862 N	103° 24' 46.731 W
8,200.0	0.79	271.51	8,115.3	26.2	-996.2	372,619.99	826,572.82	32° 1' 15.863 N	103° 24' 46.767 W
8,239.4	0.00	0.00	8,154.8	26.2	-996.5	372,620.00	826,572.55	32° 1' 15.863 N	103° 24' 46.770 W
Start 2017.7 hold at 8239.4 MD									
8,300.0	0.00	0.00	8,215.3	26.2	-996.5	372,620.00	826,572.55	32° 1' 15.863 N	103° 24' 46.770 W
8,400.0	0.00	0.00	8,315.3	26.2	-996.5	372,620.00	826,572.55	32° 1' 15.863 N	103° 24' 46.770 W
8,500.0	0.00	0.00	8,415.3	26.2	-996.5	372,620.00	826,572.55	32° 1' 15.863 N	103° 24' 46.770 W
8,600.0	0.00	0.00	8,515.3	26.2	-996.5	372,620.00	826,572.55	32° 1' 15.863 N	103° 24' 46.770 W
8,700.0	0.00	0.00	8,615.3	26.2	-996.5	372,620.00	826,572.55	32° 1' 15.863 N	103° 24' 46.770 W
8,800.0	0.00	0.00	8,715.3	26.2	-996.5	372,620.00	826,572.55	32° 1' 15.863 N	103° 24' 46.770 W
8,900.0	0.00	0.00	8,815.3	26.2	-996.5	372,620.00	826,572.55	32° 1' 15.863 N	103° 24' 46.770 W
9,000.0	0.00	0.00	8,915.3	26.2	-996.5	372,620.00	826,572.55	32° 1' 15.863 N	103° 24' 46.770 W
9,100.0	0.00	0.00	9,015.3	26.2	-996.5	372,620.00	826,572.55	32° 1' 15.863 N	103° 24' 46.770 W
9,200.0	0.00	0.00	9,115.3	26.2	-996.5	372,620.00	826,572.55	32° 1' 15.863 N	103° 24' 46.770 W
9,300.0	0.00	0.00	9,215.3	26.2	-996.5	372,620.00	826,572.55	32° 1' 15.863 N	103° 24' 46.770 W
9,400.0	0.00	0.00	9,315.3	26.2	-996.5	372,620.00	826,572.55	32° 1' 15.863 N	103° 24' 46.770 W
9,500.0	0.00	0.00	9,415.3	26.2	-996.5	372,620.00	826,572.55	32° 1' 15.863 N	103° 24' 46.770 W
9,600.0	0.00	0.00	9,515.3	26.2	-996.5	372,620.00	826,572.55	32° 1' 15.863 N	103° 24' 46.770 W
9,700.0	0.00	0.00	9,615.3	26.2	-996.5	372,620.00	826,572.55	32° 1' 15.863 N	103° 24' 46.770 W
9,800.0	0.00	0.00	9,715.3	26.2	-996.5	372,620.00	826,572.55	32° 1' 15.863 N	103° 24' 46.770 W
9,900.0	0.00	0.00	9,815.3	26.2	-996.5	372,620.00	826,572.55	32° 1' 15.863 N	103° 24' 46.770 W

Planning Report - Geographic

Database:	Compass_17	**Local Co-ordinate Reference**	Well LOS VAQUEROS FED 111H
Company:	NEW MEXICO	**TVD Reference:**	KB @ 3217.2usft
Project:	(SP) LEA	**MD Reference:**	KB @ 3217.2usft
Site:	LOS VAQUEROS FED PROJECT	**North Reference:**	Grid
Well:	LOS VAQUEROS FED 111H	**Survey Calculation Method:**	Minimum Curvature
Wellbore:	OWB		
Design:	PWP0		

Planned Survey

Measured Depth (usft)	Inclination (°)	Azimuth (°)	Vertical Depth (usft)	+N/-S (usft)	+E/-W (usft)	Map Northing (usft)	Map Easting (usft)	Latitude	Longitude
10,000.0	0.00	0.00	9,915.3	26.2	-996.5	372,620.00	826,572.55	32° 1' 15.863 N	103° 24' 46.770 W
10,100.0	0.00	0.00	10,015.3	26.2	-996.5	372,620.00	826,572.55	32° 1' 15.863 N	103° 24' 46.770 W
10,200.0	0.00	0.00	10,115.3	26.2	-996.5	372,620.00	826,572.55	32° 1' 15.863 N	103° 24' 46.770 W
10,257.2	0.00	0.00	10,172.5	26.2	-996.5	372,620.00	826,572.55	32° 1' 15.863 N	103° 24' 46.770 W
Start DLS 12.00 TFO 179.50									
10,275.0	2.14	179.50	10,190.3	25.9	-996.5	372,619.67	826,572.55	32° 1' 15.860 N	103° 24' 46.770 W
10,300.0	5.14	179.50	10,215.3	24.3	-996.5	372,618.08	826,572.57	32° 1' 15.844 N	103° 24' 46.770 W
10,325.0	8.14	179.50	10,240.1	21.4	-996.5	372,615.19	826,572.59	32° 1' 15.815 N	103° 24' 46.770 W
10,350.0	11.14	179.50	10,264.7	17.2	-996.4	372,611.00	826,572.63	32° 1' 15.774 N	103° 24' 46.770 W
10,375.0	14.14	179.50	10,289.1	11.7	-996.4	372,605.53	826,572.67	32° 1' 15.720 N	103° 24' 46.770 W
10,400.0	17.14	179.50	10,313.2	5.0	-996.3	372,598.79	826,572.73	32° 1' 15.653 N	103° 24' 46.770 W
10,425.0	20.14	179.50	10,336.9	-3.0	-996.3	372,590.80	826,572.80	32° 1' 15.574 N	103° 24' 46.770 W
10,450.0	23.14	179.50	10,360.1	-12.2	-996.2	372,581.59	826,572.88	32° 1' 15.483 N	103° 24' 46.770 W
10,475.0	26.14	179.50	10,382.9	-22.6	-996.1	372,571.17	826,572.97	32° 1' 15.380 N	103° 24' 46.770 W
10,500.0	29.14	179.50	10,405.0	-34.2	-996.0	372,559.57	826,573.07	32° 1' 15.265 N	103° 24' 46.770 W
10,525.0	32.14	179.50	10,426.5	-47.0	-995.9	372,546.83	826,573.18	32° 1' 15.139 N	103° 24' 46.770 W
10,550.0	35.14	179.50	10,447.3	-60.8	-995.8	372,532.98	826,573.30	32° 1' 15.002 N	103° 24' 46.770 W
10,575.0	38.14	179.50	10,467.4	-75.7	-995.6	372,518.07	826,573.43	32° 1' 14.854 N	103° 24' 46.770 W
10,600.0	41.14	179.50	10,486.6	-91.7	-995.5	372,502.12	826,573.57	32° 1' 14.696 N	103° 24' 46.770 W
10,625.0	44.14	179.50	10,505.0	-108.6	-995.4	372,485.19	826,573.72	32° 1' 14.529 N	103° 24' 46.770 W
10,650.0	47.14	179.50	10,522.5	-126.5	-995.2	372,467.32	826,573.87	32° 1' 14.352 N	103° 24' 46.770 W
10,675.0	50.14	179.50	10,539.0	-145.2	-995.0	372,448.55	826,574.03	32° 1' 14.166 N	103° 24' 46.770 W
10,700.0	53.14	179.50	10,554.5	-164.8	-994.9	372,428.95	826,574.20	32° 1' 13.972 N	103° 24' 46.770 W
10,725.0	56.14	179.50	10,569.0	-185.2	-994.7	372,408.57	826,574.38	32° 1' 13.771 N	103° 24' 46.770 W
10,750.0	59.14	179.50	10,582.4	-206.3	-994.5	372,387.46	826,574.56	32° 1' 13.562 N	103° 24' 46.770 W
10,775.0	62.14	179.50	10,594.6	-228.1	-994.3	372,365.67	826,574.75	32° 1' 13.346 N	103° 24' 46.770 W
10,800.0	65.14	179.50	10,605.7	-250.5	-994.1	372,343.27	826,574.95	32° 1' 13.125 N	103° 24' 46.770 W
10,825.0	68.14	179.50	10,615.6	-273.5	-993.9	372,320.33	826,575.14	32° 1' 12.897 N	103° 24' 46.770 W
10,850.0	71.14	179.50	10,624.3	-296.9	-993.7	372,296.89	826,575.35	32° 1' 12.666 N	103° 24' 46.770 W
10,875.0	74.14	179.50	10,631.8	-320.8	-993.5	372,273.03	826,575.55	32° 1' 12.429 N	103° 24' 46.770 W
10,900.0	77.14	179.50	10,638.0	-345.0	-993.3	372,248.82	826,575.76	32° 1' 12.190 N	103° 24' 46.770 W
10,925.0	80.14	179.50	10,642.9	-369.5	-993.1	372,224.31	826,575.98	32° 1' 11.947 N	103° 24' 46.770 W
10,950.0	83.14	179.50	10,646.5	-394.2	-992.9	372,199.58	826,576.19	32° 1' 11.703 N	103° 24' 46.770 W
10,975.0	86.14	179.50	10,648.9	-419.1	-992.7	372,174.69	826,576.41	32° 1' 11.456 N	103° 24' 46.770 W
11,000.0	89.14	179.50	10,649.9	-444.1	-992.4	372,149.72	826,576.62	32° 1' 11.209 N	103° 24' 46.769 W
11,007.2	90.00	179.50	10,650.0	-451.2	-992.4	372,142.55	826,576.68	32° 1' 11.138 N	103° 24' 46.769 W
Start 6986.8 hold at 11007.2 MD									
11,100.0	90.00	179.50	10,650.0	-544.1	-991.6	372,049.72	826,577.49	32° 1' 10.220 N	103° 24' 46.769 W
11,200.0	90.00	179.50	10,650.0	-644.1	-990.7	371,949.73	826,578.35	32° 1' 9.230 N	103° 24' 46.769 W
11,300.0	90.00	179.50	10,650.0	-744.1	-989.8	371,849.73	826,579.22	32° 1' 8.241 N	103° 24' 46.769 W
11,400.0	90.00	179.50	10,650.0	-844.1	-989.0	371,749.73	826,580.09	32° 1' 7.251 N	103° 24' 46.769 W
11,500.0	90.00	179.50	10,650.0	-944.1	-988.1	371,649.74	826,580.95	32° 1' 6.261 N	103° 24' 46.769 W
11,600.0	90.00	179.50	10,650.0	-1,044.1	-987.2	371,549.74	826,581.82	32° 1' 5.272 N	103° 24' 46.768 W
11,700.0	90.00	179.50	10,650.0	-1,144.1	-986.4	371,449.75	826,582.68	32° 1' 4.282 N	103° 24' 46.768 W
11,800.0	90.00	179.50	10,650.0	-1,244.0	-985.5	371,349.75	826,583.55	32° 1' 3.293 N	103° 24' 46.768 W
11,900.0	90.00	179.50	10,650.0	-1,344.0	-984.7	371,249.75	826,584.42	32° 1' 2.303 N	103° 24' 46.768 W
12,000.0	90.00	179.50	10,650.0	-1,444.0	-983.8	371,149.76	826,585.28	32° 1' 1.314 N	103° 24' 46.768 W
12,100.0	90.00	179.50	10,650.0	-1,544.0	-982.9	371,049.76	826,586.15	32° 1' 0.324 N	103° 24' 46.768 W
12,200.0	90.00	179.50	10,650.0	-1,644.0	-982.1	370,949.76	826,587.02	32° 0' 59.335 N	103° 24' 46.767 W
12,300.0	90.00	179.50	10,650.0	-1,744.0	-981.2	370,849.77	826,587.88	32° 0' 58.345 N	103° 24' 46.767 W
12,400.0	90.00	179.50	10,650.0	-1,844.0	-980.3	370,749.77	826,588.75	32° 0' 57.356 N	103° 24' 46.767 W
12,500.0	90.00	179.50	10,650.0	-1,944.0	-979.5	370,649.78	826,589.61	32° 0' 56.366 N	103° 24' 46.767 W
12,600.0	90.00	179.50	10,650.0	-2,044.0	-978.6	370,549.78	826,590.48	32° 0' 55.376 N	103° 24' 46.767 W

Planning Report - Geographic

Database:	Compass_17	**Local Co-ordinate Reference**	Well LOS VAQUEROS FED 111H
Company:	NEW MEXICO	**TVD Reference:**	KB @ 3217.2usft
Project:	(SP) LEA	**MD Reference:**	KB @ 3217.2usft
Site:	LOS VAQUEROS FED PROJECT	**North Reference:**	Grid
Well:	LOS VAQUEROS FED 111H	**Survey Calculation Method:**	Minimum Curvature
Wellbore:	OWB		
Design:	PWP0		

Planned Survey

Measured Depth (usft)	Inclination (°)	Azimuth (°)	Vertical Depth (usft)	+N/-S (usft)	+E/-W (usft)	Map Northing (usft)	Map Easting (usft)	Latitude	Longitude
12,700.0	90.00	179.50	10,650.0	-2,144.0	-977.7	370,449.78	826,591.35	32° 0' 54.387 N	103° 24' 46.767 W
12,800.0	90.00	179.50	10,650.0	-2,244.0	-976.9	370,349.79	826,592.21	32° 0' 53.397 N	103° 24' 46.766 W
12,900.0	90.00	179.50	10,650.0	-2,344.0	-976.0	370,249.79	826,593.08	32° 0' 52.408 N	103° 24' 46.766 W
13,000.0	90.00	179.50	10,650.0	-2,444.0	-975.1	370,149.79	826,593.94	32° 0' 51.418 N	103° 24' 46.766 W
13,100.0	90.00	179.50	10,650.0	-2,544.0	-974.3	370,049.80	826,594.81	32° 0' 50.429 N	103° 24' 46.766 W
13,200.0	90.00	179.50	10,650.0	-2,644.0	-973.4	369,949.80	826,595.68	32° 0' 49.439 N	103° 24' 46.766 W
13,300.0	90.00	179.50	10,650.0	-2,744.0	-972.5	369,849.81	826,596.54	32° 0' 48.450 N	103° 24' 46.766 W
13,400.0	90.00	179.50	10,650.0	-2,844.0	-971.7	369,749.81	826,597.41	32° 0' 47.460 N	103° 24' 46.765 W
13,500.0	90.00	179.50	10,650.0	-2,944.0	-970.8	369,649.81	826,598.28	32° 0' 46.471 N	103° 24' 46.765 W
13,600.0	90.00	179.50	10,650.0	-3,044.0	-969.9	369,549.82	826,599.14	32° 0' 45.481 N	103° 24' 46.765 W
13,700.0	90.00	179.50	10,650.0	-3,144.0	-969.1	369,449.82	826,600.01	32° 0' 44.491 N	103° 24' 46.765 W
13,800.0	90.00	179.50	10,650.0	-3,244.0	-968.2	369,349.82	826,600.87	32° 0' 43.502 N	103° 24' 46.765 W
13,900.0	90.00	179.50	10,650.0	-3,344.0	-967.3	369,249.83	826,601.74	32° 0' 42.512 N	103° 24' 46.765 W
14,000.0	90.00	179.50	10,650.0	-3,444.0	-966.5	369,149.83	826,602.61	32° 0' 41.523 N	103° 24' 46.764 W
14,100.0	90.00	179.50	10,650.0	-3,544.0	-965.6	369,049.84	826,603.47	32° 0' 40.533 N	103° 24' 46.764 W
14,200.0	90.00	179.50	10,650.0	-3,644.0	-964.7	368,949.84	826,604.34	32° 0' 39.544 N	103° 24' 46.764 W
14,300.0	90.00	179.50	10,650.0	-3,744.0	-963.9	368,849.84	826,605.20	32° 0' 38.554 N	103° 24' 46.764 W
14,400.0	90.00	179.50	10,650.0	-3,844.0	-963.0	368,749.85	826,606.07	32° 0' 37.565 N	103° 24' 46.764 W
14,500.0	90.00	179.50	10,650.0	-3,943.9	-962.1	368,649.85	826,606.94	32° 0' 36.575 N	103° 24' 46.764 W
14,600.0	90.00	179.50	10,650.0	-4,043.9	-961.3	368,549.85	826,607.80	32° 0' 35.585 N	103° 24' 46.763 W
14,700.0	90.00	179.50	10,650.0	-4,143.9	-960.4	368,449.86	826,608.67	32° 0' 34.596 N	103° 24' 46.763 W
14,800.0	90.00	179.50	10,650.0	-4,243.9	-959.5	368,349.86	826,609.53	32° 0' 33.606 N	103° 24' 46.763 W
14,900.0	90.00	179.50	10,650.0	-4,343.9	-958.7	368,249.87	826,610.40	32° 0' 32.617 N	103° 24' 46.763 W
15,000.0	90.00	179.50	10,650.0	-4,443.9	-957.8	368,149.87	826,611.27	32° 0' 31.627 N	103° 24' 46.763 W
15,100.0	90.00	179.50	10,650.0	-4,543.9	-956.9	368,049.87	826,612.13	32° 0' 30.638 N	103° 24' 46.763 W
15,200.0	90.00	179.50	10,650.0	-4,643.9	-956.1	367,949.88	826,613.00	32° 0' 29.648 N	103° 24' 46.762 W
15,300.0	90.00	179.50	10,650.0	-4,743.9	-955.2	367,849.88	826,613.87	32° 0' 28.659 N	103° 24' 46.762 W
15,400.0	90.00	179.50	10,650.0	-4,843.9	-954.3	367,749.88	826,614.73	32° 0' 27.669 N	103° 24' 46.762 W
15,500.0	90.00	179.50	10,650.0	-4,943.9	-953.5	367,649.89	826,615.60	32° 0' 26.680 N	103° 24' 46.762 W
15,600.0	90.00	179.50	10,650.0	-5,043.9	-952.6	367,549.89	826,616.46	32° 0' 25.690 N	103° 24' 46.762 W
15,700.0	90.00	179.50	10,650.0	-5,143.9	-951.7	367,449.90	826,617.33	32° 0' 24.700 N	103° 24' 46.762 W
15,800.0	90.00	179.50	10,650.0	-5,243.9	-950.9	367,349.90	826,618.20	32° 0' 23.711 N	103° 24' 46.761 W
15,900.0	90.00	179.50	10,650.0	-5,343.9	-950.0	367,249.90	826,619.06	32° 0' 22.721 N	103° 24' 46.761 W
16,000.0	90.00	179.50	10,650.0	-5,443.9	-949.1	367,149.91	826,619.93	32° 0' 21.732 N	103° 24' 46.761 W
16,100.0	90.00	179.50	10,650.0	-5,543.9	-948.3	367,049.91	826,620.79	32° 0' 20.742 N	103° 24' 46.761 W
16,200.0	90.00	179.50	10,650.0	-5,643.9	-947.4	366,949.91	826,621.66	32° 0' 19.753 N	103° 24' 46.761 W
16,300.0	90.00	179.50	10,650.0	-5,743.9	-946.5	366,849.92	826,622.53	32° 0' 18.763 N	103° 24' 46.761 W
16,400.0	90.00	179.50	10,650.0	-5,843.9	-945.7	366,749.92	826,623.39	32° 0' 17.774 N	103° 24' 46.760 W
16,500.0	90.00	179.50	10,650.0	-5,943.9	-944.8	366,649.93	826,624.26	32° 0' 16.784 N	103° 24' 46.760 W
16,600.0	90.00	179.50	10,650.0	-6,043.9	-943.9	366,549.93	826,625.13	32° 0' 15.795 N	103° 24' 46.760 W
16,700.0	90.00	179.50	10,650.0	-6,143.9	-943.1	366,449.93	826,625.99	32° 0' 14.805 N	103° 24' 46.760 W
16,800.0	90.00	179.50	10,650.0	-6,243.9	-942.2	366,349.94	826,626.86	32° 0' 13.815 N	103° 24' 46.760 W
16,900.0	90.00	179.50	10,650.0	-6,343.9	-941.3	366,249.94	826,627.72	32° 0' 12.826 N	103° 24' 46.759 W
17,000.0	90.00	179.50	10,650.0	-6,443.9	-940.5	366,149.94	826,628.59	32° 0' 11.836 N	103° 24' 46.759 W
17,100.0	90.00	179.50	10,650.0	-6,543.9	-939.6	366,049.95	826,629.46	32° 0' 10.847 N	103° 24' 46.759 W
17,200.0	90.00	179.50	10,650.0	-6,643.8	-938.7	365,949.95	826,630.32	32° 0' 9.857 N	103° 24' 46.759 W
17,300.0	90.00	179.50	10,650.0	-6,743.8	-937.9	365,849.96	826,631.19	32° 0' 8.868 N	103° 24' 46.759 W
17,400.0	90.00	179.50	10,650.0	-6,843.8	-937.0	365,749.96	826,632.05	32° 0' 7.878 N	103° 24' 46.759 W
17,500.0	90.00	179.50	10,650.0	-6,943.8	-936.1	365,649.96	826,632.92	32° 0' 6.889 N	103° 24' 46.758 W
17,600.0	90.00	179.50	10,650.0	-7,043.8	-935.3	365,549.97	826,633.79	32° 0' 5.899 N	103° 24' 46.758 W
17,700.0	90.00	179.50	10,650.0	-7,143.8	-934.4	365,449.97	826,634.65	32° 0' 4.909 N	103° 24' 46.758 W
17,800.0	90.00	179.50	10,650.0	-7,243.8	-933.5	365,349.97	826,635.52	32° 0' 3.920 N	103° 24' 46.758 W
17,900.0	90.00	179.50	10,650.0	-7,343.8	-932.7	365,249.98	826,636.38	32° 0' 2.930 N	103° 24' 46.758 W

Planning Report - Geographic

Database:	Compass_17	**Local Co-ordinate Reference**	Well LOS VAQUEROS FED 111H
Company:	NEW MEXICO	**TVD Reference:**	KB @ 3217.2usft
Project:	(SP) LEA	**MD Reference:**	KB @ 3217.2usft
Site:	LOS VAQUEROS FED PROJECT	**North Reference:**	Grid
Well:	LOS VAQUEROS FED 111H	**Survey Calculation Method:**	Minimum Curvature
Wellbore:	OWB		
Design:	PWP0		

Planned Survey

Measured Depth (usft)	Inclination (°)	Azimuth (°)	Vertical Depth (usft)	+N/-S (usft)	+E/-W (usft)	Map Northing (usft)	Map Easting (usft)	Latitude	Longitude
17,993.9	90.00	179.50	10,650.0	-7,437.7	-931.9	365,156.06	826,637.20	32° 0' 2.001 N	103° 24' 46.758 W
TD at 17993.9									

Design Targets

Target Name - hit/miss target - Shape	Dip Angle (°)	Dip Dir. (°)	TVD (usft)	+N/-S (usft)	+E/-W (usft)	Northing (usft)	Easting (usft)	Latitude	Longitude
LTP BHL LVF 111H - plan hits target center - Point	0.00	0.00	10,650.0	-7,437.7	-931.9	365,156.06	826,637.20	32° 0' 2.001 N	103° 24' 46.758 W
FTP LVF 111H - plan misses target center by 256.6usft at 10599.6usft MD (10486.3 TVD, -91.4 N, -995.5 E) - Point	0.00	0.00	10,650.0	106.2	-996.5	372,700.03	826,572.55	32° 1' 16.655 N	103° 24' 46.762 W

Plan Annotations

Measured Depth (usft)	Vertical Depth (usft)	Local Coordinates +N/-S (usft)	Local Coordinates +E/-W (usft)	Comment
2,000.0	2,000.0	0.0	0.0	Start Build 2.00
2,500.0	2,497.5	1.1	-43.5	Start 5239.4 hold at 2500.0 MD
7,739.4	7,657.3	25.1	-953.0	Start Drop -2.00
8,239.4	8,154.8	26.2	-996.5	Start 2017.7 hold at 8239.4 MD
10,257.2	10,172.5	26.2	-996.5	Start DLS 12.00 TFO 179.50
11,007.2	10,650.0	-451.2	-992.4	Start 6986.8 hold at 11007.2 MD
17,993.9	10,650.0	-7,437.7	-931.9	TD at 17993.9

NEW MEXICO

(SP) LEA
LOS VAQUEROS FED PROJECT
LOS VAQUEROS FED 111H

OWB
PWP0

Anticollision Report

10 July, 2024

Anticollision Report

Company:	NEW MEXICO	**Local Co-ordinate Reference**	Well LOS VAQUEROS FED 111H
Project:	(SP) LEA	**TVD Reference:**	KB @ 3217.2usft
Reference Site:	LOS VAQUEROS FED PROJECT	**MD Reference:**	KB @ 3217.2usft
Site Error:	0.0 usft	**North Reference:**	Grid
Reference Well:	LOS VAQUEROS FED 111H	**Survey Calculation Method:**	Minimum Curvature
Well Error:	0.0 usft	**Output errors are at**	2.00 sigma
Reference Wellbore	OWB	**Database:**	Compass_17
Reference Design:	PWP0	**Offset TVD Reference:**	Offset Datum

Reference PWP0

Filter type:	NO GLOBAL FILTER: Using user defined selection & filtering criteria		
Interpolation Method	Stations	**Error Model:**	ISCWSA
Depth Range:	Unlimited	**Scan Method:**	Closest Approach 3D
Results Limited by:	Maximum centre distance of 1,000.0usft	**Error Surface:**	Pedal Curve
Warning Levels Evaluated at:	2.00 **Sigma**	**Casing Method:**	Not applied

Survey Tool Program **Date** 7/10/2024

From (usft)	To (usft)	Survey (Wellbore)	Tool Name	Description
0.0	17,993.9	PWP0 (OWB)	MWD	OWSG_Rev2_ MWD - Standard

Summary

Site Name Offset Well - Wellbore - Design	Reference Measure	Offset Measured	Distance Between Centres (usft)	Distance Between Ellipses (usft)	Separation	Warning
LOS VAQUEROS FED PROJECT						
LOS VAQUEROS FED 112H - OWB - PWP0	2,000.0	1,997.1	33.5	19.4	2.374	CC, ES, SF
LOS VAQUEROS FED 113H - OWB - PWP0						Out of range
LOS VAQUEROS FED 114H - OWB - PWP0						Out of range
LOS VAQUEROS FED 121H - OWB - PWP0	1,831.5	1,836.3	26.7	13.8	2.062	CC
LOS VAQUEROS FED 121H - OWB - PWP0	10,257.2	10,263.7	80.0	0.3	1.003	Level 3, ES, SF
LOS VAQUEROS FED 122H - OWB - PWP0	2,000.0	1,996.8	99.5	85.4	7.051	CC, ES
LOS VAQUEROS FED 122H - OWB - PWP0	2,100.0	2,093.8	102.7	87.9	6.938	SF
LOS VAQUEROS FED 123H - OWB - PWP0						Out of range
LOS VAQUEROS FED 124H - OWB - PWP0						Out of range
LOS VAQUEROS FED 151H - OWB - PWP0	2,000.0	2,000.0	132.5	118.4	9.382	CC, ES
LOS VAQUEROS FED 151H - OWB - PWP0	17,993.9	18,307.0	414.0	191.5	1.860	SF
LOS VAQUEROS FED 152H - OWB - PWP0	2,000.0	1,997.8	165.5	151.4	11.725	CC, ES
LOS VAQUEROS FED 152H - OWB - PWP0	2,100.0	2,092.5	168.8	154.0	11.410	SF
LOS VAQUEROS FED 153H - OWB - PWP0						Out of range
LOS VAQUEROS FED 154H - OWB - PWP0						Out of range
LOS VAQUEROS FED 303H - OWB - PWP0						Out of range
LOS VAQUEROS FED 304H - OWB - PWP0						Out of range
LOS VAQUEROS FED 443H - OWB - PWP0						Out of range
LOS VAQUEROS FED 444H - OWB - PWP0						Out of range
LOS VAQUEROS FED 463H - OWB - PWP0						Out of range
LOS VAQUEROS FED 464H - OWB - PWP0						Out of range
LOS VAQUEROS FED 523H - OWB - PWP0						Out of range
LOS VAQUEROS FED 524H - OWB - PWP0						Out of range

Offset Design LOS VAQUEROS FED PROJECT - LOS VAQUEROS FED 112H - OWB - PWP0

Offset Site Error: 0.0 usft

Survey Program: 0-MWD **Offset Well Error:** 0.0 usft

Reference Measured Depth (usft)	Reference Vertical Depth (usft)	Offset Measured Depth (usft)	Offset Vertical Depth (usft)	Semi Major Axis Reference (usft)	Semi Major Axis Offset (usft)	Highside Toolface (°)	Offset Wellbore Centre +N/-S (usft)	Offset Wellbore Centre +E/-W (usft)	Distance Between Centres (usft)	Distance Between Ellipses (usft)	Minimum Separation (usft)	Separation Factor	Warning
0.0	0.0	0.0	0.0	0.0	0.0	89.04	0.6	33.5	33.6				
100.0	100.0	97.1	97.1	0.3	0.2	89.04	0.6	33.5	33.5	33.0	0.49	67.743	

CC - Min centre to center distance or covergent point, SF - min separation factor, ES - min ellipse separation

Anticollision Report

Company:	NEW MEXICO	**Local Co-ordinate Reference**	Well LOS VAQUEROS FED 111H
Project:	(SP) LEA	**TVD Reference:**	KB @ 3217.2usft
Reference Site:	LOS VAQUEROS FED PROJECT	**MD Reference:**	KB @ 3217.2usft
Site Error:	0.0 usft	**North Reference:**	Grid
Reference Well:	LOS VAQUEROS FED 111H	**Survey Calculation Method:**	Minimum Curvature
Well Error:	0.0 usft	**Output errors are at**	2.00 sigma
Reference Wellbore	OWB	**Database:**	Compass_17
Reference Design:	PWP0	**Offset TVD Reference:**	Offset Datum

Offset Design LOS VAQUEROS FED PROJECT - LOS VAQUEROS FED 112H - OWB - PWP0

Offset Site Error: 0.0 usft

Survey Program: 0-MWD

Offset Well Error: 0.0 usft

Rule Assigned:

Reference Measured Depth (usft)	Reference Vertical Depth (usft)	Offset Measured Depth (usft)	Offset Vertical Depth (usft)	Semi Major Axis Reference (usft)	Semi Major Axis Offset (usft)	Highside Toolface (°)	Offset Wellbore Centre +N/-S (usft)	Offset Wellbore Centre +E/-W (usft)	Distance Between Centres (usft)	Distance Between Ellipses (usft)	Minimum Separation (usft)	Separation Factor	Warning
200.0	200.0	197.1	197.1	0.6	0.6	89.04	0.6	33.5	33.5	32.3	1.21	27.726	
300.0	300.0	297.1	297.1	1.0	1.0	89.04	0.6	33.5	33.5	31.6	1.93	17.402	
400.0	400.0	397.1	397.1	1.3	1.3	89.04	0.6	33.5	33.5	30.9	2.64	12.680	
500.0	500.0	497.1	497.1	1.7	1.7	89.04	0.6	33.5	33.5	30.1	3.36	9.974	
600.0	600.0	597.1	597.1	2.0	2.0	89.04	0.6	33.5	33.5	29.4	4.08	8.220	
700.0	700.0	697.1	697.1	2.4	2.4	89.04	0.6	33.5	33.5	28.7	4.79	6.990	
800.0	800.0	797.1	797.1	2.8	2.7	89.04	0.6	33.5	33.5	28.0	5.51	6.081	
900.0	900.0	897.1	897.1	3.1	3.1	89.04	0.6	33.5	33.5	27.3	6.23	5.381	
1,000.0	1,000.0	997.1	997.1	3.5	3.5	89.04	0.6	33.5	33.5	26.6	6.94	4.825	
1,100.0	1,100.0	1,097.1	1,097.1	3.8	3.8	89.04	0.6	33.5	33.5	25.8	7.66	4.373	
1,200.0	1,200.0	1,197.1	1,197.1	4.2	4.2	89.04	0.6	33.5	33.5	25.1	8.38	3.999	
1,300.0	1,300.0	1,297.1	1,297.1	4.6	4.5	89.04	0.6	33.5	33.5	24.4	9.09	3.684	
1,400.0	1,400.0	1,397.1	1,397.1	4.9	4.9	89.04	0.6	33.5	33.5	23.7	9.81	3.415	
1,500.0	1,500.0	1,497.1	1,497.1	5.3	5.3	89.04	0.6	33.5	33.5	23.0	10.53	3.182	
1,600.0	1,600.0	1,597.1	1,597.1	5.6	5.6	89.04	0.6	33.5	33.5	22.3	11.25	2.979	
1,700.0	1,700.0	1,697.1	1,697.1	6.0	6.0	89.04	0.6	33.5	33.5	21.5	11.96	2.801	
1,800.0	1,800.0	1,797.1	1,797.1	6.3	6.3	89.04	0.6	33.5	33.5	20.8	12.68	2.642	
1,900.0	1,900.0	1,897.1	1,897.1	6.7	6.7	89.04	0.6	33.5	33.5	20.1	13.40	2.501	
2,000.0	2,000.0	1,997.1	1,997.1	7.1	7.1	89.04	0.6	33.5	33.5	19.4	14.11	2.374	CC, ES, SF
2,100.0	2,100.0	2,097.1	2,097.1	7.4	7.4	177.66	0.6	33.5	35.2	20.4	14.82	2.378	
2,200.0	2,199.8	2,196.9	2,196.9	7.8	7.8	177.96	0.6	33.5	40.5	25.0	15.52	2.608	
2,300.0	2,299.5	2,296.6	2,296.6	8.1	8.1	178.31	0.6	33.5	49.2	33.0	16.22	3.032	
2,400.0	2,398.7	2,393.8	2,393.8	8.5	8.5	178.37	0.8	35.0	62.9	46.0	16.90	3.723	
2,500.0	2,497.5	2,489.3	2,489.2	8.8	8.8	178.05	1.7	39.6	83.3	65.8	17.55	4.749	
2,600.0	2,595.9	2,583.0	2,582.5	9.2	9.1	177.60	3.1	47.2	108.6	90.4	18.17	5.978	
2,700.0	2,694.4	2,675.0	2,673.9	9.6	9.4	177.11	5.1	57.6	137.0	118.2	18.76	7.301	
2,800.0	2,792.9	2,765.2	2,763.1	10.0	9.8	176.62	7.5	70.5	168.4	149.0	19.33	8.708	
2,900.0	2,891.4	2,853.4	2,850.0	10.3	10.1	176.17	10.4	85.9	202.6	182.8	19.88	10.194	
3,000.0	2,989.9	2,939.7	2,934.4	10.7	10.4	175.75	13.7	103.4	239.8	219.4	20.40	11.753	
3,100.0	3,088.3	3,026.1	3,018.4	11.1	10.8	175.36	17.4	123.3	279.5	258.6	20.94	13.345	
3,200.0	3,186.8	3,117.6	3,107.2	11.5	11.1	175.03	21.5	145.1	319.9	298.3	21.60	14.815	
3,300.0	3,285.3	3,209.0	3,195.9	12.0	11.5	174.78	25.6	166.8	360.4	338.1	22.25	16.195	
3,400.0	3,383.8	3,300.5	3,284.6	12.4	11.9	174.58	29.7	188.6	400.8	377.9	22.91	17.494	
3,500.0	3,482.3	3,391.9	3,373.3	12.8	12.3	174.41	33.8	210.3	441.3	417.7	23.58	18.717	
3,600.0	3,580.8	3,483.4	3,462.1	13.2	12.7	174.27	37.9	232.1	481.7	457.5	24.24	19.871	
3,700.0	3,679.2	3,587.8	3,563.6	13.6	13.1	174.15	42.4	256.0	521.4	496.3	25.08	20.788	
3,800.0	3,777.7	3,702.4	3,676.0	14.0	13.6	174.09	46.6	278.3	557.8	531.7	26.02	21.437	
3,900.0	3,876.2	3,820.5	3,792.6	14.5	14.1	174.10	50.0	296.7	590.3	563.3	26.94	21.909	
4,000.0	3,974.7	3,941.8	3,913.0	14.9	14.6	174.15	52.6	310.6	618.9	591.0	27.85	22.224	
4,100.0	4,073.2	4,065.9	4,036.8	15.3	15.0	174.26	54.3	319.6	643.4	614.6	28.73	22.397	
4,200.0	4,171.6	4,192.5	4,163.3	15.7	15.5	174.41	55.0	323.4	663.6	634.0	29.57	22.443	
4,300.0	4,270.1	4,296.4	4,267.2	16.2	15.8	174.56	55.1	323.5	681.0	650.7	30.30	22.476	
4,400.0	4,368.6	4,394.9	4,365.7	16.6	16.2	174.70	55.1	323.5	698.3	667.2	31.01	22.519	
4,500.0	4,467.1	4,493.4	4,464.2	17.0	16.5	174.83	55.1	323.5	715.5	683.8	31.72	22.559	
4,600.0	4,565.6	4,591.9	4,562.7	17.5	16.8	174.95	55.1	323.5	732.8	700.4	32.43	22.598	
4,700.0	4,664.0	4,690.4	4,661.1	17.9	17.2	175.07	55.1	323.5	750.1	717.0	33.14	22.634	
4,800.0	4,762.5	4,788.8	4,759.6	18.3	17.5	175.18	55.1	323.5	767.4	733.6	33.85	22.669	
4,900.0	4,861.0	4,887.3	4,858.1	18.8	17.9	175.28	55.1	323.5	784.8	750.2	34.57	22.702	
5,000.0	4,959.5	4,985.8	4,956.6	19.2	18.2	175.39	55.1	323.5	802.1	766.8	35.28	22.733	
5,100.0	5,058.0	5,084.3	5,055.1	19.7	18.5	175.48	55.1	323.5	819.4	783.4	36.00	22.762	
5,200.0	5,156.4	5,182.8	5,153.5	20.1	18.9	175.58	55.1	323.5	836.7	800.0	36.71	22.791	

CC - Min centre to center distance or covergent point, SF - min separation factor, ES - min ellipse separation

Anticollision Report

Company:	NEW MEXICO	**Local Co-ordinate Reference**	Well LOS VAQUEROS FED 111H
Project:	(SP) LEA	**TVD Reference:**	KB @ 3217.2usft
Reference Site:	LOS VAQUEROS FED PROJECT	**MD Reference:**	KB @ 3217.2usft
Site Error:	0.0 usft	**North Reference:**	Grid
Reference Well:	LOS VAQUEROS FED 111H	**Survey Calculation Method:**	Minimum Curvature
Well Error:	0.0 usft	**Output errors are at**	2.00 sigma
Reference Wellbore	OWB	**Database:**	Compass_17
Reference Design:	PWP0	**Offset TVD Reference:**	Offset Datum

Offset Design LOS VAQUEROS FED PROJECT - LOS VAQUEROS FED 112H - OWB - PWP0

Offset Site Error: 0.0 usft

Survey Program: 0-MWD

Offset Well Error: 0.0 usft

Rule Assigned:

Reference Measured Depth (usft)	Reference Vertical Depth (usft)	Offset Measured Depth (usft)	Offset Vertical Depth (usft)	Semi Major Axis Reference (usft)	Semi Major Axis Offset (usft)	Highside Toolface (°)	Offset Wellbore Centre +N/-S (usft)	Offset Wellbore Centre +E/-W (usft)	Distance Between Centres (usft)	Distance Between Ellipses (usft)	Minimum Separation (usft)	Separation Factor	Warning
5,300.0	5,254.9	5,281.2	5,252.0	20.5	19.2	175.67	55.1	323.5	854.0	816.6	37.43	22.818	
5,400.0	5,353.4	5,379.7	5,350.5	21.0	19.6	175.75	55.1	323.5	871.3	833.2	38.14	22.843	
5,500.0	5,451.9	5,478.2	5,449.0	21.4	19.9	175.84	55.1	323.5	888.6	849.8	38.86	22.868	
5,600.0	5,550.4	5,576.7	5,547.5	21.9	20.2	175.92	55.1	323.5	906.0	866.4	39.58	22.891	
5,700.0	5,648.9	5,675.2	5,646.0	22.3	20.6	175.99	55.1	323.5	923.3	883.0	40.29	22.913	
5,800.0	5,747.3	5,773.6	5,744.4	22.7	20.9	176.07	55.1	323.5	940.6	899.6	41.01	22.935	
5,900.0	5,845.8	5,872.1	5,842.9	23.2	21.3	176.14	55.1	323.5	957.9	916.2	41.73	22.955	
6,000.0	5,944.3	5,970.6	5,941.4	23.6	21.6	176.21	55.1	323.5	975.3	932.8	42.45	22.975	
6,100.0	6,042.8	6,069.1	6,039.9	24.1	22.0	176.27	55.1	323.5	992.6	949.4	43.17	22.994	

Anticollision Report

Company:	NEW MEXICO	**Local Co-ordinate Reference**	Well LOS VAQUEROS FED 111H
Project:	(SP) LEA	**TVD Reference:**	KB @ 3217.2usft
Reference Site:	LOS VAQUEROS FED PROJECT	**MD Reference:**	KB @ 3217.2usft
Site Error:	0.0 usft	**North Reference:**	Grid
Reference Well:	LOS VAQUEROS FED 111H	**Survey Calculation Method:**	Minimum Curvature
Well Error:	0.0 usft	**Output errors are at**	2.00 sigma
Reference Wellbore	OWB	**Database:**	Compass_17
Reference Design:	PWP0	**Offset TVD Reference:**	Offset Datum

Offset Design LOS VAQUEROS FED PROJECT - LOS VAQUEROS FED 121H - OWB - PWP0

Offset Site Error: 0.0 usft

Survey Program: 0-MWD **Rule Assigned:** **Offset Well Error:** 0.0 usft

Reference Measured Depth (usft)	Reference Vertical Depth (usft)	Offset Measured Depth (usft)	Offset Vertical Depth (usft)	Semi Major Axis Reference (usft)	Semi Major Axis Offset (usft)	Highside Toolface (°)	Offset Wellbore Centre +N/-S (usft)	Offset Wellbore Centre +E/-W (usft)	Distance Between Centres (usft)	Distance Between Ellipses (usft)	Minimum Separation (usft)	Separation Factor	Warning
0.0	0.0	0.0	0.0	0.0	0.0	89.07	1.1	66.5	66.5				
100.0	100.0	100.0	100.0	0.3	0.3	89.07	1.1	66.5	66.5	66.0	0.50	132.524	
200.0	200.0	200.0	200.0	0.6	0.6	89.07	1.1	66.5	66.5	65.3	1.22	54.569	
300.0	300.0	300.0	300.0	1.0	1.0	89.07	1.1	66.5	66.5	64.6	1.94	34.358	
400.0	400.0	400.0	400.0	1.3	1.3	89.07	1.1	66.5	66.5	63.9	2.65	25.072	
500.0	500.0	500.0	500.0	1.7	1.7	89.07	1.1	66.5	66.5	63.1	3.37	19.738	
600.0	600.0	600.0	600.0	2.0	2.0	89.07	1.1	66.5	66.5	62.4	4.09	16.275	
700.0	700.0	700.0	700.0	2.4	2.4	89.07	1.1	66.5	66.5	61.7	4.80	13.846	
800.0	800.0	800.0	800.0	2.8	2.8	89.07	1.1	66.5	66.5	61.0	5.52	12.048	
900.0	900.0	900.0	900.0	3.1	3.1	89.07	1.1	66.5	66.5	60.3	6.24	10.663	
1,000.0	1,000.0	1,000.0	1,000.0	3.5	3.5	89.07	1.1	66.5	66.5	59.6	6.95	9.564	
1,100.0	1,100.0	1,099.9	1,099.9	3.8	3.8	87.57	2.8	66.5	66.6	58.9	7.67	8.677	
1,200.0	1,200.0	1,199.7	1,199.6	4.2	4.2	83.47	7.6	66.5	66.9	58.5	8.39	7.982	
1,300.0	1,300.0	1,301.7	1,301.5	4.6	4.6	79.01	12.6	65.1	66.3	57.2	9.11	7.279	
1,400.0	1,400.0	1,403.8	1,403.3	4.9	4.9	74.30	16.9	60.1	62.5	52.7	9.82	6.366	
1,500.0	1,500.0	1,505.5	1,504.6	5.3	5.3	68.49	20.3	51.6	55.7	45.2	10.52	5.291	
1,600.0	1,600.0	1,606.5	1,604.9	5.6	5.7	59.93	23.0	39.7	46.2	34.9	11.22	4.114	
1,700.0	1,700.0	1,706.7	1,703.8	6.0	6.0	44.62	24.9	24.5	35.1	23.2	11.94	2.943	
1,800.0	1,800.0	1,805.3	1,801.0	6.3	6.4	15.96	26.2	7.5	27.3	14.6	12.73	2.144	
1,831.5	1,831.5	1,836.3	1,831.6	6.5	6.5	4.56	26.7	2.1	26.7	13.8	12.97	2.062	CC
1,900.0	1,900.0	1,903.8	1,897.9	6.7	6.8	-19.08	27.6	-9.5	29.3	15.8	13.43	2.179	
2,000.0	2,000.0	2,002.2	1,994.9	7.1	7.2	-42.57	29.0	-26.6	39.6	25.6	14.06	2.819	
2,100.0	2,100.0	2,101.0	2,092.2	7.4	7.6	34.16	30.3	-43.7	52.3	37.6	14.71	3.555	
2,200.0	2,199.8	2,200.3	2,189.9	7.8	8.0	28.55	31.7	-60.9	63.2	47.8	15.39	4.106	
2,300.0	2,299.5	2,299.9	2,288.0	8.1	8.4	25.80	33.1	-78.1	71.4	55.3	16.09	4.436	
2,400.0	2,398.7	2,399.7	2,386.4	8.5	8.8	24.68	34.4	-95.4	76.5	59.7	16.80	4.552	
2,500.0	2,497.5	2,499.7	2,484.8	8.8	9.2	24.76	35.8	-112.7	78.4	60.9	17.52	4.476	
2,600.0	2,595.9	2,599.7	2,583.3	9.2	9.7	25.37	37.2	-130.0	78.8	60.5	18.25	4.317	
2,700.0	2,694.4	2,699.7	2,681.8	9.6	10.1	25.98	38.6	-147.3	79.2	60.2	18.99	4.169	
2,800.0	2,792.9	2,799.7	2,780.2	10.0	10.5	26.59	39.9	-164.6	79.6	59.8	19.73	4.031	
2,900.0	2,891.4	2,899.7	2,878.7	10.3	10.9	27.19	41.3	-181.9	79.9	59.5	20.48	3.903	
3,000.0	2,989.9	2,999.7	2,977.2	10.7	11.4	27.78	42.7	-199.2	80.4	59.1	21.24	3.783	
3,100.0	3,088.3	3,099.7	3,075.7	11.1	11.8	28.37	44.1	-216.6	80.8	58.8	22.00	3.671	
3,200.0	3,186.8	3,199.7	3,174.2	11.5	12.3	28.95	45.5	-233.9	81.2	58.4	22.77	3.566	
3,300.0	3,285.3	3,299.7	3,272.6	12.0	12.7	29.53	46.8	-251.2	81.6	58.1	23.54	3.468	
3,400.0	3,383.8	3,399.7	3,371.1	12.4	13.1	30.10	48.2	-268.5	82.1	57.7	24.31	3.375	
3,500.0	3,482.3	3,499.7	3,469.6	12.8	13.6	30.66	49.6	-285.8	82.5	57.4	25.09	3.288	
3,600.0	3,580.8	3,599.6	3,568.1	13.2	14.0	31.22	51.0	-303.1	83.0	57.1	25.87	3.206	
3,700.0	3,679.2	3,699.6	3,666.5	13.6	14.5	31.77	52.4	-320.4	83.4	56.8	26.66	3.129	
3,800.0	3,777.7	3,799.6	3,765.0	14.0	14.9	32.32	53.7	-337.7	83.9	56.4	27.45	3.056	
3,900.0	3,876.2	3,899.6	3,863.5	14.5	15.3	32.85	55.1	-355.0	84.4	56.1	28.25	2.987	
4,000.0	3,974.7	3,999.6	3,962.0	14.9	15.8	33.39	56.5	-372.3	84.9	55.8	29.05	2.921	
4,100.0	4,073.2	4,099.6	4,060.4	15.3	16.2	33.91	57.9	-389.6	85.3	55.5	29.85	2.859	
4,200.0	4,171.6	4,199.6	4,158.9	15.7	16.7	34.43	59.3	-407.0	85.8	55.2	30.66	2.800	
4,300.0	4,270.1	4,299.6	4,257.4	16.2	17.1	34.95	60.6	-424.3	86.3	54.9	31.47	2.744	
4,400.0	4,368.6	4,399.6	4,355.9	16.6	17.6	35.46	62.0	-441.6	86.9	54.6	32.28	2.691	
4,500.0	4,467.1	4,499.6	4,454.3	17.0	18.0	35.96	63.4	-458.9	87.4	54.3	33.10	2.640	
4,600.0	4,565.6	4,599.6	4,552.8	17.5	18.5	36.46	64.8	-476.2	87.9	54.0	33.92	2.592	
4,700.0	4,664.0	4,699.6	4,651.3	17.9	18.9	36.95	66.2	-493.5	88.4	53.7	34.74	2.546	
4,800.0	4,762.5	4,799.6	4,749.8	18.3	19.4	37.43	67.5	-510.8	89.0	53.4	35.57	2.502	
4,900.0	4,861.0	4,899.6	4,848.3	18.8	19.8	37.91	68.9	-528.1	89.5	53.1	36.39	2.460	

CC - Min centre to center distance or covergent point, SF - min separation factor, ES - min ellipse separation

Anticollision Report

Company:	NEW MEXICO	**Local Co-ordinate Reference**	Well LOS VAQUEROS FED 111H
Project:	(SP) LEA	**TVD Reference:**	KB @ 3217.2usft
Reference Site:	LOS VAQUEROS FED PROJECT	**MD Reference:**	KB @ 3217.2usft
Site Error:	0.0 usft	**North Reference:**	Grid
Reference Well:	LOS VAQUEROS FED 111H	**Survey Calculation Method:**	Minimum Curvature
Well Error:	0.0 usft	**Output errors are at**	2.00 sigma
Reference Wellbore	OWB	**Database:**	Compass_17
Reference Design:	PWP0	**Offset TVD Reference:**	Offset Datum

Offset Design LOS VAQUEROS FED PROJECT - LOS VAQUEROS FED 121H - OWB - PWP0

Offset Site Error: 0.0 usft

Survey Program: 0-MWD

Offset Well Error: 0.0 usft

Rule Assigned:

Reference Measured Depth (usft)	Reference Vertical Depth (usft)	Offset Measured Depth (usft)	Offset Vertical Depth (usft)	Semi Major Axis Reference (usft)	Semi Major Axis Offset (usft)	Highside Toolface (°)	Offset Wellbore Centre +N/-S (usft)	Offset Wellbore Centre +E/-W (usft)	Distance Between Centres (usft)	Distance Between Ellipses (usft)	Minimum Separation (usft)	Separation Factor	Warning
5,000.0	4,959.5	4,999.6	4,946.7	19.2	20.2	38.38	70.3	-545.4	90.1	52.8	37.23	2.420	
5,100.0	5,058.0	5,099.6	5,045.2	19.7	20.7	38.85	71.7	-562.7	90.6	52.6	38.06	2.381	
5,200.0	5,156.4	5,199.6	5,143.7	20.1	21.1	39.31	73.0	-580.0	91.2	52.3	38.90	2.345	
5,300.0	5,254.9	5,299.6	5,242.2	20.5	21.6	39.77	74.4	-597.4	91.8	52.0	39.74	2.309	
5,400.0	5,353.4	5,399.6	5,340.6	21.0	22.0	40.22	75.8	-614.7	92.3	51.8	40.58	2.276	
5,500.0	5,451.9	5,499.6	5,439.1	21.4	22.5	40.66	77.2	-632.0	92.9	51.5	41.42	2.243	
5,600.0	5,550.4	5,599.6	5,537.6	21.9	22.9	41.10	78.6	-649.3	93.5	51.2	42.27	2.212	
5,700.0	5,648.9	5,699.6	5,636.1	22.3	23.4	41.54	79.9	-666.6	94.1	51.0	43.12	2.182	
5,800.0	5,747.3	5,799.6	5,734.5	22.7	23.8	41.96	81.3	-683.9	94.7	50.7	43.97	2.154	
5,900.0	5,845.8	5,899.5	5,833.0	23.2	24.3	42.39	82.7	-701.2	95.3	50.5	44.82	2.126	
6,000.0	5,944.3	5,999.5	5,931.5	23.6	24.7	42.80	84.1	-718.5	95.9	50.2	45.68	2.100	
6,100.0	6,042.8	6,099.5	6,030.0	24.1	25.2	43.22	85.5	-735.8	96.5	50.0	46.54	2.074	
6,200.0	6,141.3	6,199.5	6,128.5	24.5	25.6	43.62	86.8	-753.1	97.1	49.7	47.40	2.049	
6,300.0	6,239.7	6,299.5	6,226.9	25.0	26.1	44.02	88.2	-770.5	97.8	49.5	48.26	2.026	
6,400.0	6,338.2	6,399.5	6,325.4	25.4	26.5	44.42	89.6	-787.8	98.4	49.3	49.12	2.003	
6,500.0	6,436.7	6,499.5	6,423.9	25.8	27.0	44.81	91.0	-805.1	99.0	49.0	49.99	1.981	
6,600.0	6,535.2	6,599.5	6,522.4	26.3	27.4	45.20	92.4	-822.4	99.7	48.8	50.86	1.960	
6,700.0	6,633.7	6,699.5	6,620.8	26.7	27.9	45.58	93.7	-839.7	100.3	48.6	51.73	1.939	
6,800.0	6,732.1	6,799.5	6,719.3	27.2	28.3	45.96	95.1	-857.0	100.9	48.3	52.60	1.919	
6,900.0	6,830.6	6,899.5	6,817.8	27.6	28.8	46.33	96.5	-874.3	101.6	48.1	53.47	1.900	
7,000.0	6,929.1	6,999.5	6,916.3	28.1	29.3	46.70	97.9	-891.6	102.2	47.9	54.34	1.881	
7,100.0	7,027.6	7,099.5	7,014.7	28.5	29.7	47.06	99.3	-908.9	102.9	47.7	55.22	1.864	
7,200.0	7,126.1	7,199.5	7,113.2	29.0	30.2	47.42	100.6	-926.2	103.6	47.5	56.10	1.846	
7,300.0	7,224.5	7,299.5	7,211.7	29.4	30.6	47.77	102.0	-943.5	104.2	47.3	56.97	1.829	
7,400.0	7,323.0	7,400.7	7,311.4	29.9	31.1	48.27	103.4	-960.7	104.6	46.8	57.88	1.808	
7,500.0	7,421.5	7,503.2	7,412.9	30.3	31.5	50.00	104.5	-975.0	103.0	44.1	58.93	1.748	
7,600.0	7,520.0	7,605.3	7,514.5	30.8	31.9	53.37	105.4	-985.7	99.1	39.0	60.12	1.648	
7,700.0	7,618.5	7,706.8	7,615.7	31.2	32.3	58.77	105.9	-992.7	93.5	32.0	61.50	1.520	
7,739.4	7,657.3	7,746.6	7,655.5	31.4	32.4	61.58	106.1	-994.5	91.0	28.9	62.10	1.466	Level 3
7,800.0	7,717.1	7,807.6	7,716.4	31.7	32.6	66.35	106.2	-996.1	87.4	24.4	63.03	1.387	Level 3
7,900.0	7,816.1	7,907.3	7,816.1	32.1	32.9	74.61	106.2	-996.5	83.0	18.6	64.42	1.289	Level 3
8,000.0	7,915.6	8,006.8	7,915.6	32.5	33.2	81.43	106.2	-996.5	80.9	15.4	65.47	1.236	Level 3
8,100.0	8,015.4	8,106.6	8,015.4	32.8	33.5	86.08	106.2	-996.5	80.2	13.9	66.26	1.210	Level 3
8,200.0	8,115.3	8,206.5	8,115.3	33.2	33.8	88.31	106.2	-996.5	80.0	13.1	66.93	1.196	Level 3
8,239.4	8,154.8	8,245.9	8,154.8	33.3	33.9	0.01	106.2	-996.5	80.0	12.9	67.17	1.191	Level 3
8,300.0	8,215.3	8,306.5	8,215.3	33.5	34.1	0.01	106.2	-996.5	80.0	12.5	67.54	1.185	Level 3
8,400.0	8,315.3	8,406.5	8,315.3	33.8	34.4	0.01	106.2	-996.5	80.0	11.9	68.15	1.174	Level 3
8,500.0	8,415.3	8,506.5	8,415.3	34.1	34.7	0.01	106.2	-996.5	80.0	11.3	68.76	1.164	Level 3
8,600.0	8,515.3	8,606.5	8,515.3	34.4	35.0	0.01	106.2	-996.5	80.0	10.7	69.37	1.154	Level 3
8,700.0	8,615.3	8,706.5	8,615.3	34.7	35.3	0.01	106.2	-996.5	80.0	10.0	69.98	1.144	Level 3
8,800.0	8,715.3	8,806.5	8,715.3	35.0	35.6	0.01	106.2	-996.5	80.0	9.4	70.60	1.134	Level 3
8,900.0	8,815.3	8,906.5	8,815.3	35.3	35.9	0.01	106.2	-996.5	80.0	8.8	71.21	1.124	Level 3
9,000.0	8,915.3	9,006.5	8,915.3	35.6	36.2	0.01	106.2	-996.5	80.0	8.2	71.83	1.114	Level 3
9,100.0	9,015.3	9,106.5	9,015.3	35.9	36.5	0.01	106.2	-996.5	80.0	7.6	72.46	1.105	Level 3
9,200.0	9,115.3	9,206.5	9,115.3	36.3	36.8	0.01	106.2	-996.5	80.0	7.0	73.08	1.095	Level 3
9,300.0	9,215.3	9,306.5	9,215.3	36.6	37.1	0.01	106.2	-996.5	80.0	6.3	73.70	1.086	Level 3
9,400.0	9,315.3	9,406.5	9,315.3	36.9	37.5	0.01	106.2	-996.5	80.0	5.7	74.33	1.077	Level 3
9,500.0	9,415.3	9,506.5	9,415.3	37.2	37.8	0.01	106.2	-996.5	80.0	5.1	74.96	1.068	Level 3
9,600.0	9,515.3	9,606.5	9,515.3	37.5	38.1	0.01	106.2	-996.5	80.0	4.4	75.59	1.059	Level 3
9,700.0	9,615.3	9,706.5	9,615.3	37.8	38.4	0.01	106.2	-996.5	80.0	3.8	76.22	1.050	Level 3
9,800.0	9,715.3	9,806.5	9,715.3	38.2	38.7	0.01	106.2	-996.5	80.0	3.2	76.85	1.041	Level 3

CC - Min centre to center distance or covergent point, SF - min separation factor, ES - min ellipse separation

Anticollision Report

Company:	NEW MEXICO	**Local Co-ordinate Reference**	Well LOS VAQUEROS FED 111H
Project:	(SP) LEA	**TVD Reference:**	KB @ 3217.2usft
Reference Site:	LOS VAQUEROS FED PROJECT	**MD Reference:**	KB @ 3217.2usft
Site Error:	0.0 usft	**North Reference:**	Grid
Reference Well:	LOS VAQUEROS FED 111H	**Survey Calculation Method:**	Minimum Curvature
Well Error:	0.0 usft	**Output errors are at**	2.00 sigma
Reference Wellbore	OWB	**Database:**	Compass_17
Reference Design:	PWP0	**Offset TVD Reference:**	Offset Datum

Offset Design LOS VAQUEROS FED PROJECT - LOS VAQUEROS FED 121H - OWB - PWP0

Offset Site Error: 0.0 usft

Survey Program: 0-MWD

Offset Well Error: 0.0 usft

Reference Measured Depth (usft)	Reference Vertical Depth (usft)	Offset Measured Depth (usft)	Offset Vertical Depth (usft)	Semi Major Axis Reference (usft)	Semi Major Axis Offset (usft)	Highside Toolface (°)	Offset Wellbore Centre +N/-S (usft)	Offset Wellbore Centre +E/-W (usft)	Distance Between Centres (usft)	Distance Between Ellipses (usft)	Minimum Separation (usft)	Separation Factor	Rule Assigned: Warning
9,900.0	9,815.3	9,906.5	9,815.3	38.5	39.0	0.01	106.2	-996.5	80.0	2.5	77.49	1.033	Level 3
10,000.0	9,915.3	10,006.5	9,915.3	38.8	39.3	0.01	106.2	-996.5	80.0	1.9	78.12	1.024	Level 3
10,100.0	10,015.3	10,106.5	10,015.3	39.1	39.7	0.01	106.2	-996.5	80.0	1.3	78.76	1.016	Level 3
10,200.0	10,115.3	10,206.5	10,115.3	39.4	40.0	0.01	106.2	-996.5	80.0	0.6	79.40	1.008	Level 3
10,257.2	10,172.5	10,263.7	10,172.5	39.6	40.2	0.01	106.2	-996.5	80.0	0.3	79.76	1.003	Level 3, ES, SF
10,275.0	10,190.3	10,281.5	10,190.3	39.7	40.2	-179.50	106.2	-996.5	80.4	0.5	79.88	1.006	Level 3
10,300.0	10,215.3	10,306.4	10,215.3	39.8	40.3	-179.51	106.2	-996.5	81.9	1.9	80.03	1.024	Level 3
10,325.0	10,240.1	10,331.3	10,240.1	39.8	40.4	-179.52	106.2	-996.5	84.8	4.7	80.18	1.058	Level 3
10,350.0	10,264.7	10,355.9	10,264.7	39.9	40.4	-179.54	106.2	-996.5	89.0	8.7	80.34	1.108	Level 3
10,375.0	10,289.1	10,380.3	10,289.1	40.0	40.5	-179.56	106.2	-996.5	94.5	14.0	80.49	1.174	Level 3
10,400.0	10,313.2	10,404.4	10,313.2	40.1	40.6	-179.58	106.2	-996.5	101.2	20.6	80.64	1.255	Level 3
10,425.0	10,336.9	10,428.1	10,336.9	40.1	40.7	-179.61	106.2	-996.5	109.2	28.4	80.78	1.352	Level 3
10,450.0	10,360.1	10,451.3	10,360.1	40.2	40.7	-179.63	106.2	-996.5	118.4	37.5	80.92	1.464	Level 3
10,475.0	10,382.9	10,474.0	10,382.9	40.3	40.8	-179.65	106.2	-996.5	128.9	47.8	81.06	1.590	
10,500.0	10,405.0	10,496.2	10,405.0	40.3	40.9	-179.67	106.2	-996.5	140.5	59.3	81.19	1.730	
10,525.0	10,426.5	10,517.7	10,426.5	40.4	41.0	-179.69	106.2	-996.5	153.2	71.9	81.32	1.884	
10,550.0	10,447.3	10,538.5	10,447.3	40.4	41.0	-179.71	106.2	-996.5	167.0	85.6	81.44	2.051	
10,575.0	10,467.4	10,558.5	10,467.4	40.5	41.1	-179.72	106.2	-996.5	182.0	100.4	81.56	2.231	
10,600.0	10,486.6	10,577.8	10,486.6	40.6	41.2	-179.73	106.2	-996.5	197.9	116.2	81.67	2.423	
10,625.0	10,505.0	10,596.2	10,505.0	40.6	41.2	-179.74	106.2	-996.5	214.8	133.1	81.78	2.627	
10,650.0	10,522.5	10,613.7	10,522.5	40.7	41.3	-179.75	106.2	-996.5	232.7	150.8	81.88	2.842	
10,675.0	10,539.0	10,630.2	10,539.0	40.7	41.3	-179.75	106.2	-996.5	251.5	169.5	81.97	3.068	
10,700.0	10,554.5	10,645.7	10,554.5	40.7	41.4	-179.75	106.2	-996.5	271.1	189.0	82.05	3.304	
10,725.0	10,569.0	10,660.2	10,569.0	40.8	41.4	-179.75	106.2	-996.5	291.5	209.3	82.13	3.549	
10,750.0	10,582.4	10,673.5	10,582.4	40.8	41.5	-179.75	106.2	-996.5	312.6	230.4	82.20	3.803	
10,775.0	10,594.6	10,685.8	10,594.6	40.9	41.5	-179.74	106.2	-996.5	334.4	252.1	82.26	4.065	
10,800.0	10,605.7	10,696.9	10,605.7	40.9	41.5	-179.73	106.2	-996.5	356.8	274.4	82.32	4.334	
10,825.0	10,615.6	10,706.8	10,615.6	41.0	41.6	-179.72	106.2	-996.5	379.7	297.3	82.37	4.610	
10,850.0	10,624.3	10,715.5	10,624.3	41.0	41.6	-179.69	106.2	-996.5	403.1	320.7	82.41	4.892	
10,875.0	10,631.8	10,723.0	10,631.8	41.0	41.6	-179.66	106.2	-996.5	427.0	344.6	82.45	5.179	
10,900.0	10,638.0	10,729.2	10,638.0	41.1	41.6	-179.60	106.2	-996.5	451.2	368.7	82.48	5.471	
10,925.0	10,642.9	10,734.1	10,642.9	41.1	41.7	-179.51	106.2	-996.5	475.7	393.2	82.50	5.766	
10,950.0	10,646.5	10,737.7	10,646.5	41.2	41.7	-179.33	106.2	-996.5	500.5	417.9	82.52	6.065	
10,975.0	10,648.9	10,740.1	10,648.9	41.2	41.7	-178.86	106.2	-996.5	525.3	442.8	82.53	6.366	
11,000.0	10,649.9	10,741.1	10,649.9	41.3	41.7	-175.15	106.2	-996.5	550.3	467.8	82.54	6.668	
11,007.2	10,650.0	10,741.1	10,650.0	41.3	41.7	-90.23	106.2	-996.5	557.5	475.0	82.54	6.755	
11,100.0	10,650.0	10,741.1	10,650.0	41.6	41.7	-90.27	106.2	-996.5	650.3	567.8	82.54	7.879	
11,200.0	10,650.0	12,036.6	11,400.0	41.9	44.7	-179.95	-644.1	-990.1	750.1	703.5	46.62	16.089	
11,300.0	10,650.0	12,136.6	11,400.0	42.3	45.1	-179.95	-744.1	-989.2	750.1	703.0	47.06	15.939	
11,400.0	10,650.0	12,236.6	11,400.0	42.7	45.5	-179.95	-844.1	-988.4	750.1	702.5	47.55	15.776	
11,500.0	10,650.0	12,336.6	11,400.0	43.3	46.0	-179.95	-944.1	-987.5	750.1	702.0	48.08	15.601	
11,600.0	10,650.0	12,436.6	11,400.0	43.8	46.5	-179.95	-1,044.1	-986.7	750.1	701.4	48.66	15.416	
11,700.0	10,650.0	12,536.6	11,400.0	44.5	47.1	-179.96	-1,144.1	-985.8	750.1	700.8	49.28	15.222	
11,800.0	10,650.0	12,636.6	11,400.0	45.2	47.8	-179.96	-1,244.0	-984.9	750.1	700.1	49.94	15.020	
11,900.0	10,650.0	12,736.6	11,400.0	45.9	48.5	-179.96	-1,344.0	-984.1	750.1	699.4	50.64	14.812	
12,000.0	10,650.0	12,836.6	11,400.0	46.7	49.3	-179.96	-1,444.0	-983.2	750.1	698.7	51.38	14.598	
12,100.0	10,650.0	12,936.6	11,400.0	47.6	50.1	-179.96	-1,544.0	-982.4	750.1	697.9	52.16	14.380	
12,200.0	10,650.0	13,036.6	11,400.0	48.5	50.9	-179.96	-1,644.0	-981.5	750.1	697.1	52.97	14.159	
12,300.0	10,650.0	13,136.6	11,400.0	49.4	51.8	-179.96	-1,744.0	-980.7	750.1	696.2	53.82	13.937	
12,400.0	10,650.0	13,236.6	11,400.0	50.3	52.8	-179.96	-1,844.0	-979.8	750.1	695.4	54.70	13.713	
12,500.0	10,650.0	13,336.6	11,400.0	51.3	53.7	-179.96	-1,944.0	-978.9	750.1	694.5	55.61	13.489	

CC - Min centre to center distance or covergent point, SF - min separation factor, ES - min ellipse separation

Anticollision Report

Company:	NEW MEXICO	**Local Co-ordinate Reference**	Well LOS VAQUEROS FED 111H
Project:	(SP) LEA	**TVD Reference:**	KB @ 3217.2usft
Reference Site:	LOS VAQUEROS FED PROJECT	**MD Reference:**	KB @ 3217.2usft
Site Error:	0.0 usft	**North Reference:**	Grid
Reference Well:	LOS VAQUEROS FED 111H	**Survey Calculation Method:**	Minimum Curvature
Well Error:	0.0 usft	**Output errors are at**	2.00 sigma
Reference Wellbore	OWB	**Database:**	Compass_17
Reference Design:	PWP0	**Offset TVD Reference:**	Offset Datum

Offset Design LOS VAQUEROS FED PROJECT - LOS VAQUEROS FED 121H - OWB - PWP0

Offset Site Error: 0.0 usft

Survey Program: 0-MWD

Offset Well Error: 0.0 usft

Reference Measured Depth (usft)	Reference Vertical Depth (usft)	Offset Measured Depth (usft)	Offset Vertical Depth (usft)	Semi Major Axis Reference (usft)	Semi Major Axis Offset (usft)	Highside Toolface (°)	Offset Wellbore Centre +N/-S (usft)	Offset Wellbore Centre +E/-W (usft)	Distance Between Centres (usft)	Distance Between Ellipses (usft)	Minimum Separation (usft)	Separation Factor	Rule Assigned: Warning
12,600.0	10,650.0	13,436.6	11,400.0	52.4	54.7	-179.96	-2,044.0	-978.1	750.1	693.5	56.54	13.265	
12,700.0	10,650.0	13,536.6	11,400.0	53.4	55.7	-179.96	-2,144.0	-977.2	750.1	692.6	57.51	13.042	
12,800.0	10,650.0	13,636.6	11,400.0	54.5	56.8	-179.96	-2,244.0	-976.4	750.1	691.6	58.50	12.821	
12,900.0	10,650.0	13,736.6	11,400.0	55.7	57.9	-179.96	-2,344.0	-975.5	750.1	690.5	59.52	12.602	
13,000.0	10,650.0	13,836.6	11,400.0	56.8	59.0	-179.96	-2,444.0	-974.7	750.1	689.5	60.56	12.386	
13,100.0	10,650.0	13,936.6	11,400.0	58.0	60.1	-179.97	-2,544.0	-973.8	750.1	688.4	61.62	12.172	
13,200.0	10,650.0	14,036.6	11,400.0	59.2	61.3	-179.97	-2,644.0	-972.9	750.1	687.4	62.70	11.962	
13,300.0	10,650.0	14,136.6	11,400.0	60.4	62.5	-179.97	-2,744.0	-972.1	750.1	686.2	63.81	11.755	
13,400.0	10,650.0	14,236.6	11,400.0	61.6	63.7	-179.97	-2,844.0	-971.2	750.1	685.1	64.93	11.551	
13,500.0	10,650.0	14,336.6	11,400.0	62.9	64.9	-179.97	-2,944.0	-970.4	750.1	684.0	66.07	11.352	
13,600.0	10,650.0	14,436.6	11,400.0	64.1	66.1	-179.97	-3,044.0	-969.5	750.1	682.8	67.23	11.156	
13,700.0	10,650.0	14,536.6	11,400.0	65.4	67.4	-179.97	-3,144.0	-968.7	750.1	681.6	68.41	10.965	
13,800.0	10,650.0	14,636.6	11,400.0	66.7	68.7	-179.97	-3,244.0	-967.8	750.0	680.5	69.60	10.777	
13,900.0	10,650.0	14,736.6	11,400.0	68.1	70.0	-179.97	-3,344.0	-966.9	750.0	679.2	70.80	10.594	
14,000.0	10,650.0	14,836.6	11,400.0	69.4	71.3	-179.97	-3,444.0	-966.1	750.0	678.0	72.02	10.414	
14,100.0	10,650.0	14,936.6	11,400.0	70.7	72.6	-179.97	-3,544.0	-965.2	750.0	676.8	73.25	10.239	
14,200.0	10,650.0	15,036.6	11,400.0	72.1	73.9	-179.97	-3,644.0	-964.4	750.0	675.5	74.50	10.068	
14,300.0	10,650.0	15,136.6	11,400.0	73.5	75.3	-179.97	-3,744.0	-963.5	750.0	674.3	75.76	9.901	
14,400.0	10,650.0	15,236.6	11,400.0	74.9	76.6	-179.97	-3,844.0	-962.7	750.0	673.0	77.03	9.738	
14,500.0	10,650.0	15,336.6	11,400.0	76.3	78.0	-179.98	-3,944.0	-961.8	750.0	671.7	78.30	9.578	
14,600.0	10,650.0	15,436.6	11,400.0	77.7	79.4	-179.98	-4,043.9	-961.0	750.0	670.4	79.59	9.423	
14,700.0	10,650.0	15,536.6	11,400.0	79.1	80.7	-179.98	-4,143.9	-960.1	750.0	669.1	80.89	9.272	
14,800.0	10,650.0	15,636.6	11,400.0	80.5	82.1	-179.98	-4,243.9	-959.2	750.0	667.8	82.20	9.124	
14,900.0	10,650.0	15,736.6	11,400.0	81.9	83.6	-179.98	-4,343.9	-958.4	750.0	666.5	83.52	8.980	
15,000.0	10,650.0	15,836.6	11,400.0	83.4	85.0	-179.98	-4,443.9	-957.5	750.0	665.2	84.85	8.840	
15,100.0	10,650.0	15,936.6	11,400.0	84.8	86.4	-179.98	-4,543.9	-956.7	750.0	663.9	86.18	8.703	
15,200.0	10,650.0	16,036.6	11,400.0	86.3	87.8	-179.98	-4,643.9	-955.8	750.0	662.5	87.53	8.569	
15,300.0	10,650.0	16,136.6	11,400.0	87.7	89.3	-179.98	-4,743.9	-955.0	750.0	661.2	88.88	8.439	
15,400.0	10,650.0	16,236.6	11,400.0	89.2	90.7	-179.98	-4,843.9	-954.1	750.0	659.8	90.23	8.312	
15,500.0	10,650.0	16,336.6	11,400.0	90.7	92.2	-179.98	-4,943.9	-953.2	750.0	658.4	91.60	8.188	
15,600.0	10,650.0	16,436.6	11,400.0	92.1	93.6	-179.98	-5,043.9	-952.4	750.0	657.1	92.97	8.068	
15,700.0	10,650.0	16,536.6	11,400.0	93.6	95.1	-179.98	-5,143.9	-951.5	750.0	655.7	94.34	7.950	
15,800.0	10,650.0	16,636.6	11,400.0	95.1	96.6	-179.98	-5,243.9	-950.7	750.0	654.3	95.73	7.835	
15,900.0	10,650.0	16,736.6	11,400.0	96.6	98.0	-179.99	-5,343.9	-949.8	750.0	652.9	97.11	7.723	
16,000.0	10,650.0	16,836.6	11,400.0	98.1	99.5	-179.99	-5,443.9	-949.0	750.0	651.5	98.51	7.614	
16,100.0	10,650.0	16,936.6	11,400.0	99.6	101.0	-179.99	-5,543.9	-948.1	750.0	650.1	99.91	7.507	
16,200.0	10,650.0	17,036.6	11,400.0	101.1	102.5	-179.99	-5,643.9	-947.2	750.0	648.7	101.31	7.403	
16,300.0	10,650.0	17,136.6	11,400.0	102.6	104.0	-179.99	-5,743.9	-946.4	750.0	647.3	102.72	7.302	
16,400.0	10,650.0	17,236.6	11,400.0	104.2	105.5	-179.99	-5,843.9	-945.5	750.0	645.9	104.13	7.203	
16,500.0	10,650.0	17,336.6	11,400.0	105.7	107.0	-179.99	-5,943.9	-944.7	750.0	644.5	105.55	7.106	
16,600.0	10,650.0	17,436.6	11,400.0	107.2	108.5	-179.99	-6,043.9	-943.8	750.0	643.0	106.97	7.011	
16,700.0	10,650.0	17,536.6	11,400.0	108.7	110.0	-179.99	-6,143.9	-943.0	750.0	641.6	108.40	6.919	
16,800.0	10,650.0	17,636.6	11,400.0	110.3	111.6	-179.99	-6,243.9	-942.1	750.0	640.2	109.83	6.829	
16,900.0	10,650.0	17,736.6	11,400.0	111.8	113.1	-179.99	-6,343.9	-941.2	750.0	638.8	111.26	6.741	
17,000.0	10,650.0	17,836.6	11,400.0	113.3	114.6	-179.99	-6,443.9	-940.4	750.0	637.3	112.70	6.655	
17,100.0	10,650.0	17,936.6	11,400.0	114.9	116.1	-179.99	-6,543.9	-939.5	750.0	635.9	114.14	6.571	
17,200.0	10,650.0	18,036.6	11,400.0	116.4	117.7	-179.99	-6,643.9	-938.7	750.0	634.4	115.58	6.489	
17,300.0	10,650.0	18,136.6	11,400.0	118.0	119.2	-180.00	-6,743.8	-937.8	750.0	633.0	117.03	6.409	
17,400.0	10,650.0	18,236.6	11,400.0	119.5	120.7	-180.00	-6,843.8	-937.0	750.0	631.5	118.48	6.330	
17,500.0	10,650.0	18,336.6	11,400.0	121.1	122.3	-180.00	-6,943.8	-936.1	750.0	630.1	119.93	6.254	
17,600.0	10,650.0	18,436.6	11,400.0	122.6	123.8	-180.00	-7,043.8	-935.2	750.0	628.6	121.39	6.178	

CC - Min centre to center distance or covergent point, SF - min separation factor, ES - min ellipse separation

Anticollision Report

Company:	NEW MEXICO	**Local Co-ordinate Reference**	Well LOS VAQUEROS FED 111H
Project:	(SP) LEA	**TVD Reference:**	KB @ 3217.2usft
Reference Site:	LOS VAQUEROS FED PROJECT	**MD Reference:**	KB @ 3217.2usft
Site Error:	0.0 usft	**North Reference:**	Grid
Reference Well:	LOS VAQUEROS FED 111H	**Survey Calculation Method:**	Minimum Curvature
Well Error:	0.0 usft	**Output errors are at**	2.00 sigma
Reference Wellbore	OWB	**Database:**	Compass_17
Reference Design:	PWP0	**Offset TVD Reference:**	Offset Datum

Offset Design LOS VAQUEROS FED PROJECT - LOS VAQUEROS FED 121H - OWB - PWP0

Offset Site Error: 0.0 usft

Survey Program: 0-MWD

Offset Well Error: 0.0 usft

Rule Assigned:

Reference Measured Depth (usft)	Reference Vertical Depth (usft)	Offset Measured Depth (usft)	Offset Vertical Depth (usft)	Semi Major Axis Reference (usft)	Semi Major Axis Offset (usft)	Highside Toolface (°)	Offset Wellbore Centre +N/-S (usft)	Offset Wellbore Centre +E/-W (usft)	Distance Between Centres (usft)	Distance Between Ellipses (usft)	Minimum Separation (usft)	Separation Factor	Warning
17,700.0	10,650.0	18,536.6	11,400.0	124.2	125.4	-180.00	-7,143.8	-934.4	750.0	627.2	122.85	6.105	
17,800.0	10,650.0	18,636.6	11,400.0	125.7	126.9	-180.00	-7,243.8	-933.5	750.0	625.7	124.31	6.033	
17,900.0	10,650.0	18,736.6	11,400.0	127.3	128.5	-180.00	-7,343.8	-932.7	750.0	624.2	125.77	5.963	
17,993.9	10,650.0	18,830.5	11,400.0	128.8	129.9	180.00	-7,437.7	-931.9	750.0	622.8	127.15	5.898	

Anticollision Report

Company:	NEW MEXICO	**Local Co-ordinate Reference**	Well LOS VAQUEROS FED 111H
Project:	(SP) LEA	**TVD Reference:**	KB @ 3217.2usft
Reference Site:	LOS VAQUEROS FED PROJECT	**MD Reference:**	KB @ 3217.2usft
Site Error:	0.0 usft	**North Reference:**	Grid
Reference Well:	LOS VAQUEROS FED 111H	**Survey Calculation Method:**	Minimum Curvature
Well Error:	0.0 usft	**Output errors are at**	2.00 sigma
Reference Wellbore	OWB	**Database:**	Compass_17
Reference Design:	PWP0	**Offset TVD Reference:**	Offset Datum

Offset Design LOS VAQUEROS FED PROJECT - LOS VAQUEROS FED 122H - OWB - PWP0

Offset Site Error: 0.0 usft

Survey Program: 0-MWD **Rule Assigned:** **Offset Well Error:** 0.0 usft

Reference Measured Depth (usft)	Reference Vertical Depth (usft)	Offset Measured Depth (usft)	Offset Vertical Depth (usft)	Semi Major Axis Reference (usft)	Semi Major Axis Offset (usft)	Highside Toolface (°)	Offset Wellbore Centre +N/-S (usft)	Offset Wellbore Centre +E/-W (usft)	Distance Between Centres (usft)	Distance Between Ellipses (usft)	Minimum Separation (usft)	Separation Factor	Warning
0.0	0.0	0.0	0.0	0.0	0.0	89.07	1.6	99.5	99.6				
100.0	100.0	96.8	96.8	0.3	0.2	89.07	1.6	99.5	99.5	99.0	0.49	201.492	
200.0	200.0	196.8	196.8	0.6	0.6	89.07	1.6	99.5	99.5	98.3	1.21	82.416	
300.0	300.0	296.8	296.8	1.0	1.0	89.07	1.6	99.5	99.5	97.6	1.92	51.709	
400.0	400.0	396.8	396.8	1.3	1.3	89.07	1.6	99.5	99.5	96.9	2.64	37.673	
500.0	500.0	496.8	496.8	1.7	1.7	89.07	1.6	99.5	99.5	96.1	3.36	29.630	
600.0	600.0	596.8	596.8	2.0	2.0	89.07	1.6	99.5	99.5	95.4	4.08	24.417	
700.0	700.0	696.8	696.8	2.4	2.4	89.07	1.6	99.5	99.5	94.7	4.79	20.764	
800.0	800.0	796.8	796.8	2.8	2.7	89.07	1.6	99.5	99.5	94.0	5.51	18.062	
900.0	900.0	896.8	896.8	3.1	3.1	89.07	1.6	99.5	99.5	93.3	6.23	15.982	
1,000.0	1,000.0	996.8	996.8	3.5	3.5	89.07	1.6	99.5	99.5	92.6	6.94	14.332	
1,100.0	1,100.0	1,096.8	1,096.8	3.8	3.8	89.07	1.6	99.5	99.5	91.8	7.66	12.990	
1,200.0	1,200.0	1,196.8	1,196.8	4.2	4.2	89.07	1.6	99.5	99.5	91.1	8.38	11.878	
1,300.0	1,300.0	1,296.8	1,296.8	4.6	4.5	89.07	1.6	99.5	99.5	90.4	9.09	10.942	
1,400.0	1,400.0	1,396.8	1,396.8	4.9	4.9	89.07	1.6	99.5	99.5	89.7	9.81	10.142	
1,500.0	1,500.0	1,496.8	1,496.8	5.3	5.3	89.07	1.6	99.5	99.5	89.0	10.53	9.452	
1,600.0	1,600.0	1,596.8	1,596.8	5.6	5.6	89.07	1.6	99.5	99.5	88.3	11.24	8.849	
1,700.0	1,700.0	1,696.8	1,696.8	6.0	6.0	89.07	1.6	99.5	99.5	87.5	11.96	8.319	
1,800.0	1,800.0	1,796.8	1,796.8	6.3	6.3	89.07	1.6	99.5	99.5	86.8	12.68	7.848	
1,900.0	1,900.0	1,896.8	1,896.8	6.7	6.7	89.07	1.6	99.5	99.5	86.1	13.40	7.428	
2,000.0	2,000.0	1,996.8	1,996.8	7.1	7.1	89.07	1.6	99.5	99.5	85.4	14.11	7.051	CC, ES
2,100.0	2,100.0	2,093.8	2,093.7	7.4	7.4	177.22	2.3	100.9	102.7	87.9	14.80	6.938	SF
2,200.0	2,199.8	2,190.0	2,189.9	7.8	7.7	176.28	4.5	105.1	112.4	96.9	15.46	7.268	
2,300.0	2,299.5	2,285.0	2,284.5	8.1	8.1	175.01	8.0	112.1	128.6	112.5	16.10	7.984	
2,400.0	2,398.7	2,378.2	2,377.1	8.5	8.4	173.68	12.9	121.7	151.2	134.5	16.73	9.041	
2,500.0	2,497.5	2,468.9	2,466.8	8.8	8.7	172.45	18.9	133.7	180.2	162.8	17.32	10.400	
2,600.0	2,595.9	2,561.4	2,558.0	9.2	9.1	171.42	26.1	147.8	213.0	195.0	17.95	11.863	
2,700.0	2,694.4	2,655.8	2,650.9	9.6	9.4	170.64	33.5	162.5	246.1	227.4	18.62	13.215	
2,800.0	2,792.9	2,750.1	2,743.8	10.0	9.8	170.04	40.9	177.1	279.1	259.9	19.29	14.473	
2,900.0	2,891.4	2,844.4	2,836.7	10.3	10.2	169.57	48.3	191.7	312.3	292.3	19.96	15.644	
3,000.0	2,989.9	2,938.8	2,929.6	10.7	10.5	169.19	55.7	206.3	345.4	324.7	20.64	16.736	
3,100.0	3,088.3	3,033.1	3,022.5	11.1	10.9	168.88	63.1	220.9	378.5	357.2	21.32	17.757	
3,200.0	3,186.8	3,127.4	3,115.4	11.5	11.3	168.62	70.5	235.5	411.7	389.7	22.00	18.712	
3,300.0	3,285.3	3,221.7	3,208.2	12.0	11.7	168.39	77.9	250.1	444.8	422.1	22.69	19.608	
3,400.0	3,383.8	3,316.1	3,301.1	12.4	12.0	168.20	85.3	264.7	478.0	454.6	23.37	20.449	
3,500.0	3,482.3	3,410.4	3,394.0	12.8	12.4	168.03	92.7	279.4	511.1	487.1	24.06	21.241	
3,600.0	3,580.8	3,518.2	3,500.3	13.2	12.9	167.89	100.7	295.2	543.6	518.7	24.89	21.841	
3,700.0	3,679.2	3,635.9	3,617.0	13.6	13.3	167.89	107.5	308.6	572.5	546.7	25.77	22.214	
3,800.0	3,777.7	3,756.2	3,736.9	14.0	13.8	168.03	112.2	317.9	597.6	571.0	26.64	22.435	
3,900.0	3,876.2	3,878.9	3,859.4	14.5	14.2	168.30	114.7	322.8	618.8	591.3	27.48	22.521	
4,000.0	3,974.7	3,990.9	3,971.5	14.9	14.6	168.64	115.0	323.5	636.4	608.2	28.24	22.534	
4,100.0	4,073.2	4,089.4	4,070.0	15.3	15.0	168.94	115.0	323.5	653.5	624.5	28.95	22.570	
4,200.0	4,171.6	4,187.9	4,168.4	15.7	15.3	169.23	115.0	323.5	670.5	640.9	29.66	22.604	
4,300.0	4,270.1	4,286.3	4,266.9	16.2	15.6	169.50	115.0	323.5	687.6	657.2	30.38	22.637	
4,400.0	4,368.6	4,384.8	4,365.4	16.6	16.0	169.76	115.0	323.5	704.7	673.6	31.09	22.668	
4,500.0	4,467.1	4,483.3	4,463.9	17.0	16.3	170.00	115.0	323.5	721.8	690.0	31.80	22.698	
4,600.0	4,565.6	4,581.8	4,562.4	17.5	16.7	170.23	115.0	323.5	738.9	706.4	32.51	22.726	
4,700.0	4,664.0	4,680.3	4,660.8	17.9	17.0	170.46	115.0	323.5	756.0	722.8	33.23	22.753	
4,800.0	4,762.5	4,778.7	4,759.3	18.3	17.3	170.67	115.0	323.5	773.2	739.2	33.94	22.779	
4,900.0	4,861.0	4,877.2	4,857.8	18.8	17.7	170.87	115.0	323.5	790.3	755.7	34.66	22.804	
5,000.0	4,959.5	4,975.7	4,956.3	19.2	18.0	171.07	115.0	323.5	807.5	772.1	35.37	22.828	

CC - Min centre to center distance or covergent point, SF - min separation factor, ES - min ellipse separation

Anticollision Report

Company:	NEW MEXICO	**Local Co-ordinate Reference**	Well LOS VAQUEROS FED 111H
Project:	(SP) LEA	**TVD Reference:**	KB @ 3217.2usft
Reference Site:	LOS VAQUEROS FED PROJECT	**MD Reference:**	KB @ 3217.2usft
Site Error:	0.0 usft	**North Reference:**	Grid
Reference Well:	LOS VAQUEROS FED 111H	**Survey Calculation Method:**	Minimum Curvature
Well Error:	0.0 usft	**Output errors are at**	2.00 sigma
Reference Wellbore	OWB	**Database:**	Compass_17
Reference Design:	PWP0	**Offset TVD Reference:**	Offset Datum

Offset Design LOS VAQUEROS FED PROJECT - LOS VAQUEROS FED 122H - OWB - PWP0

Offset Site Error: 0.0 usft

Survey Program: 0-MWD

Offset Well Error: 0.0 usft

Rule Assigned:

Reference Measured Depth (usft)	Reference Vertical Depth (usft)	Offset Measured Depth (usft)	Offset Vertical Depth (usft)	Semi Major Axis Reference (usft)	Semi Major Axis Offset (usft)	Highside Toolface (°)	Offset Wellbore Centre +N/-S (usft)	Offset Wellbore Centre +E/-W (usft)	Distance Between Centres (usft)	Distance Between Ellipses (usft)	Minimum Separation (usft)	Separation Factor	Warning
5,100.0	5,058.0	5,074.2	5,054.8	19.7	18.4	171.26	115.0	323.5	824.6	788.5	36.09	22.851	
5,200.0	5,156.4	5,172.7	5,153.2	20.1	18.7	171.44	115.0	323.5	841.8	805.0	36.80	22.872	
5,300.0	5,254.9	5,271.1	5,251.7	20.5	19.1	171.61	115.0	323.5	859.0	821.5	37.52	22.893	
5,400.0	5,353.4	5,369.6	5,350.2	21.0	19.4	171.77	115.0	323.5	876.2	837.9	38.24	22.914	
5,500.0	5,451.9	5,468.1	5,448.7	21.4	19.7	171.93	115.0	323.5	893.4	854.4	38.96	22.933	
5,600.0	5,550.4	5,566.6	5,547.2	21.9	20.1	172.09	115.0	323.5	910.6	870.9	39.67	22.952	
5,700.0	5,648.9	5,665.1	5,645.7	22.3	20.4	172.24	115.0	323.5	927.8	887.4	40.39	22.969	
5,800.0	5,747.3	5,763.5	5,744.1	22.7	20.8	172.38	115.0	323.5	945.0	903.9	41.11	22.987	
5,900.0	5,845.8	5,862.0	5,842.6	23.2	21.1	172.51	115.0	323.5	962.2	920.4	41.83	23.003	
6,000.0	5,944.3	5,960.5	5,941.1	23.6	21.5	172.65	115.0	323.5	979.4	936.9	42.55	23.019	
6,100.0	6,042.8	6,059.0	6,039.6	24.1	21.8	172.77	115.0	323.5	996.7	953.4	43.27	23.035	

Anticollision Report

Company:	NEW MEXICO	**Local Co-ordinate Reference**	Well LOS VAQUEROS FED 111H
Project:	(SP) LEA	**TVD Reference:**	KB @ 3217.2usft
Reference Site:	LOS VAQUEROS FED PROJECT	**MD Reference:**	KB @ 3217.2usft
Site Error:	0.0 usft	**North Reference:**	Grid
Reference Well:	LOS VAQUEROS FED 111H	**Survey Calculation Method:**	Minimum Curvature
Well Error:	0.0 usft	**Output errors are at**	2.00 sigma
Reference Wellbore	OWB	**Database:**	Compass_17
Reference Design:	PWP0	**Offset TVD Reference:**	Offset Datum

Offset Design LOS VAQUEROS FED PROJECT - LOS VAQUEROS FED 151H - OWB - PWP0

Offset Site Error: 0.0 usft

Survey Program: 0-MWD

Offset Well Error: 0.0 usft

Reference Measured Depth (usft)	Reference Vertical Depth (usft)	Offset Measured Depth (usft)	Offset Vertical Depth (usft)	Semi Major Axis Reference (usft)	Semi Major Axis Offset (usft)	Highside Toolface (°)	Offset Wellbore Centre +N/-S (usft)	Offset Wellbore Centre +E/-W (usft)	Distance Between Centres (usft)	Distance Between Ellipses (usft)	Minimum Separation (usft)	Separation Factor	Rule Assigned: Warning
0.0	0.0	0.0	0.0	0.0	0.0	89.07	2.2	132.5	132.5				
100.0	100.0	100.0	100.0	0.3	0.3	89.07	2.2	132.5	132.5	132.0	0.50	264.033	
200.0	200.0	200.0	200.0	0.6	0.6	89.07	2.2	132.5	132.5	131.3	1.22	108.719	
300.0	300.0	300.0	300.0	1.0	1.0	89.07	2.2	132.5	132.5	130.6	1.94	68.453	
400.0	400.0	400.0	400.0	1.3	1.3	89.07	2.2	132.5	132.5	129.9	2.65	49.952	
500.0	500.0	500.0	500.0	1.7	1.7	89.07	2.2	132.5	132.5	129.1	3.37	39.324	
600.0	600.0	600.0	600.0	2.0	2.0	89.07	2.2	132.5	132.5	128.4	4.09	32.425	
700.0	700.0	700.0	700.0	2.4	2.4	89.07	2.2	132.5	132.5	127.7	4.80	27.586	
800.0	800.0	800.0	800.0	2.8	2.8	89.07	2.2	132.5	132.5	127.0	5.52	24.003	
900.0	900.0	900.0	900.0	3.1	3.1	89.07	2.2	132.5	132.5	126.3	6.24	21.244	
1,000.0	1,000.0	1,000.0	1,000.0	3.5	3.5	89.07	2.2	132.5	132.5	125.6	6.95	19.054	
1,100.0	1,100.0	1,100.0	1,100.0	3.8	3.8	89.07	2.2	132.5	132.5	124.8	7.67	17.273	
1,200.0	1,200.0	1,200.0	1,200.0	4.2	4.2	89.07	2.2	132.5	132.5	124.1	8.39	15.797	
1,300.0	1,300.0	1,300.0	1,300.0	4.6	4.6	89.07	2.2	132.5	132.5	123.4	9.11	14.553	
1,400.0	1,400.0	1,400.0	1,400.0	4.9	4.9	89.07	2.2	132.5	132.5	122.7	9.82	13.491	
1,500.0	1,500.0	1,500.0	1,500.0	5.3	5.3	89.07	2.2	132.5	132.5	122.0	10.54	12.573	
1,600.0	1,600.0	1,600.0	1,600.0	5.6	5.6	89.07	2.2	132.5	132.5	121.3	11.26	11.772	
1,700.0	1,700.0	1,700.0	1,700.0	6.0	6.0	89.07	2.2	132.5	132.5	120.5	11.97	11.067	
1,800.0	1,800.0	1,800.0	1,800.0	6.3	6.3	89.07	2.2	132.5	132.5	119.8	12.69	10.442	
1,900.0	1,900.0	1,900.0	1,900.0	6.7	6.7	89.07	2.2	132.5	132.5	119.1	13.41	9.884	
2,000.0	2,000.0	2,000.0	2,000.0	7.1	7.1	89.07	2.2	132.5	132.5	118.4	14.12	9.382	CC, ES
2,100.0	2,100.0	2,100.0	2,100.0	7.4	7.4	178.34	0.4	132.5	134.2	119.4	14.81	9.062	
2,200.0	2,199.8	2,199.7	2,199.5	7.8	7.7	-179.46	-4.8	132.5	139.6	124.1	15.48	9.016	
2,300.0	2,299.5	2,302.4	2,302.0	8.1	8.1	-176.87	-11.5	131.7	147.9	131.7	16.16	9.154	
2,400.0	2,398.7	2,407.0	2,406.4	8.5	8.4	-175.16	-16.5	127.7	156.8	139.9	16.84	9.311	
2,500.0	2,497.5	2,512.0	2,511.1	8.8	8.8	-174.26	-19.7	120.4	165.8	148.3	17.51	9.470	
2,600.0	2,595.9	2,617.5	2,616.0	9.2	9.1	-174.01	-20.9	109.8	173.3	155.1	18.17	9.534	
2,700.0	2,694.4	2,723.4	2,721.0	9.6	9.5	-174.27	-20.2	95.7	177.3	158.5	18.83	9.418	
2,800.0	2,792.9	2,827.6	2,823.8	10.0	9.9	-174.97	-17.7	78.7	178.1	158.6	19.49	9.141	
2,900.0	2,891.4	2,927.6	2,922.2	10.3	10.3	-175.76	-14.8	61.5	178.1	157.9	20.19	8.820	
2,931.9	2,922.8	2,959.5	2,953.7	10.5	10.4	-176.01	-13.9	56.1	178.1	157.7	20.42	8.723	
3,000.0	2,989.9	3,027.6	3,020.7	10.7	10.7	-176.55	-11.9	44.4	178.1	157.2	20.90	8.522	
3,100.0	3,088.3	3,127.5	3,119.1	11.1	11.0	-177.34	-9.0	27.3	178.1	156.5	21.61	8.243	
3,200.0	3,186.8	3,227.5	3,217.6	11.5	11.4	-178.13	-6.1	10.2	178.2	155.9	22.32	7.983	
3,300.0	3,285.3	3,327.5	3,316.1	12.0	11.8	-178.91	-3.2	-6.9	178.3	155.3	23.04	7.739	
3,400.0	3,383.8	3,427.4	3,414.5	12.4	12.2	-179.70	-0.3	-24.0	178.4	154.7	23.76	7.511	
3,500.0	3,482.3	3,527.4	3,513.0	12.8	12.6	179.52	2.6	-41.2	178.6	154.1	24.48	7.296	
3,600.0	3,580.8	3,627.4	3,611.4	13.2	13.0	178.73	5.5	-58.3	178.8	153.6	25.21	7.095	
3,700.0	3,679.2	3,727.4	3,709.9	13.6	13.4	177.95	8.4	-75.4	179.1	153.1	25.93	6.905	
3,800.0	3,777.7	3,827.3	3,808.3	14.0	13.9	177.17	11.3	-92.5	179.3	152.7	26.66	6.726	
3,900.0	3,876.2	3,927.3	3,906.8	14.5	14.3	176.40	14.2	-109.6	179.7	152.3	27.40	6.558	
4,000.0	3,974.7	4,027.3	4,005.2	14.9	14.7	175.62	17.1	-126.7	180.0	151.9	28.13	6.398	
4,100.0	4,073.2	4,127.2	4,103.7	15.3	15.1	174.85	20.0	-143.9	180.4	151.5	28.87	6.248	
4,200.0	4,171.6	4,227.2	4,202.1	15.7	15.5	174.08	22.9	-161.0	180.8	151.2	29.61	6.105	
4,300.0	4,270.1	4,327.2	4,300.6	16.2	16.0	173.32	25.8	-178.1	181.2	150.9	30.35	5.970	
4,400.0	4,368.6	4,427.1	4,399.0	16.6	16.4	172.56	28.7	-195.2	181.7	150.6	31.10	5.842	
4,500.0	4,467.1	4,527.1	4,497.5	17.0	16.8	171.81	31.6	-212.3	182.2	150.3	31.85	5.721	
4,600.0	4,565.6	4,627.1	4,595.9	17.5	17.2	171.05	34.5	-229.4	182.7	150.1	32.60	5.605	
4,700.0	4,664.0	4,727.1	4,694.4	17.9	17.7	170.31	37.4	-246.5	183.3	149.9	33.35	5.496	
4,800.0	4,762.5	4,827.0	4,792.8	18.3	18.1	169.56	40.2	-263.7	183.9	149.8	34.11	5.391	
4,900.0	4,861.0	4,927.0	4,891.3	18.8	18.5	168.83	43.1	-280.8	184.5	149.6	34.87	5.292	

CC - Min centre to center distance or covergent point, SF - min separation factor, ES - min ellipse separation

Anticollision Report

Company:	NEW MEXICO	**Local Co-ordinate Reference**	Well LOS VAQUEROS FED 111H
Project:	(SP) LEA	**TVD Reference:**	KB @ 3217.2usft
Reference Site:	LOS VAQUEROS FED PROJECT	**MD Reference:**	KB @ 3217.2usft
Site Error:	0.0 usft	**North Reference:**	Grid
Reference Well:	LOS VAQUEROS FED 111H	**Survey Calculation Method:**	Minimum Curvature
Well Error:	0.0 usft	**Output errors are at**	2.00 sigma
Reference Wellbore	OWB	**Database:**	Compass_17
Reference Design:	PWP0	**Offset TVD Reference:**	Offset Datum

Offset Design LOS VAQUEROS FED PROJECT - LOS VAQUEROS FED 151H - OWB - PWP0

Offset Site Error: 0.0 usft

Survey Program: 0-MWD

Offset Well Error: 0.0 usft

Reference Measured Depth (usft)	Reference Vertical Depth (usft)	Offset Measured Depth (usft)	Offset Vertical Depth (usft)	Semi Major Axis Reference (usft)	Semi Major Axis Offset (usft)	Highside Toolface (°)	Offset Wellbore Centre +N/-S (usft)	Offset Wellbore Centre +E/-W (usft)	Distance Between Centres (usft)	Distance Between Ellipses (usft)	Minimum Separation (usft)	Separation Factor	Warning
5,000.0	4,959.5	5,027.0	4,989.7	19.2	19.0	168.09	46.0	-297.9	185.2	149.5	35.63	5.197	
5,100.0	5,058.0	5,126.9	5,088.2	19.7	19.4	167.37	48.9	-315.0	185.8	149.5	36.40	5.106	
5,200.0	5,156.4	5,226.9	5,186.6	20.1	19.8	166.65	51.8	-332.1	186.6	149.4	37.17	5.020	
5,300.0	5,254.9	5,326.9	5,285.1	20.5	20.3	165.93	54.7	-349.2	187.3	149.4	37.94	4.937	
5,400.0	5,353.4	5,426.8	5,383.5	21.0	20.7	165.22	57.6	-366.4	188.1	149.4	38.71	4.859	
5,500.0	5,451.9	5,526.8	5,482.0	21.4	21.1	164.52	60.5	-383.5	188.9	149.4	39.49	4.783	
5,600.0	5,550.4	5,626.8	5,580.4	21.9	21.6	163.82	63.4	-400.6	189.7	149.4	40.27	4.711	
5,700.0	5,648.9	5,726.8	5,678.9	22.3	22.0	163.13	66.3	-417.7	190.6	149.5	41.06	4.642	
5,800.0	5,747.3	5,826.7	5,777.3	22.7	22.4	162.44	69.2	-434.8	191.5	149.6	41.84	4.576	
5,900.0	5,845.8	5,926.7	5,875.8	23.2	22.9	161.76	72.1	-451.9	192.4	149.7	42.64	4.512	
6,000.0	5,944.3	6,026.7	5,974.2	23.6	23.3	161.09	75.0	-469.1	193.3	149.9	43.43	4.451	
6,100.0	6,042.8	6,126.6	6,072.7	24.1	23.8	160.42	77.9	-486.2	194.3	150.1	44.23	4.393	
6,200.0	6,141.3	6,226.6	6,171.1	24.5	24.2	159.76	80.8	-503.3	195.3	150.3	45.03	4.337	
6,300.0	6,239.7	6,326.6	6,269.6	25.0	24.6	159.11	83.7	-520.4	196.3	150.5	45.83	4.283	
6,400.0	6,338.2	6,426.5	6,368.0	25.4	25.1	158.46	86.6	-537.5	197.4	150.7	46.64	4.231	
6,500.0	6,436.7	6,526.5	6,466.5	25.8	25.5	157.82	89.5	-554.6	198.4	151.0	47.45	4.182	
6,600.0	6,535.2	6,626.5	6,564.9	26.3	26.0	157.19	92.4	-571.8	199.5	151.2	48.26	4.134	
6,700.0	6,633.7	6,726.5	6,663.4	26.7	26.4	156.57	95.3	-588.9	200.6	151.6	49.08	4.088	
6,800.0	6,732.1	6,826.4	6,761.8	27.2	26.9	155.95	98.2	-606.0	201.8	151.9	49.90	4.043	
6,900.0	6,830.6	6,926.4	6,860.3	27.6	27.3	155.34	101.1	-623.1	202.9	152.2	50.72	4.001	
7,000.0	6,929.1	7,021.0	6,953.7	28.1	27.7	154.98	103.6	-637.9	205.4	153.8	51.54	3.985	
7,100.0	7,027.6	7,115.1	7,047.1	28.5	28.1	155.10	105.6	-649.7	210.6	158.3	52.28	4.028	
7,200.0	7,126.1	7,208.9	7,140.4	29.0	28.5	155.65	107.0	-658.3	218.5	165.6	52.93	4.128	
7,300.0	7,224.5	7,300.0	7,231.3	29.4	28.8	156.54	108.0	-663.9	229.3	175.8	53.49	4.286	
7,400.0	7,323.0	7,394.4	7,325.7	29.9	29.1	157.75	108.4	-666.6	242.8	188.8	54.03	4.494	
7,500.0	7,421.5	7,490.2	7,421.5	30.3	29.4	159.14	108.5	-666.9	258.8	204.2	54.58	4.741	
7,600.0	7,520.0	7,588.7	7,520.0	30.8	29.7	160.43	108.5	-666.9	275.1	219.9	55.20	4.984	
7,700.0	7,618.5	7,687.2	7,618.5	31.2	30.0	161.57	108.5	-666.9	291.6	235.7	55.83	5.222	
7,739.4	7,657.3	7,726.0	7,657.3	31.4	30.2	161.98	108.5	-666.9	298.1	242.0	56.09	5.314	
7,800.0	7,717.1	7,785.8	7,717.1	31.7	30.3	162.61	108.5	-666.9	307.5	251.0	56.48	5.445	
7,900.0	7,816.1	7,884.8	7,816.1	32.1	30.7	163.41	108.5	-666.9	320.5	263.3	57.14	5.609	
8,000.0	7,915.6	7,984.3	7,915.6	32.5	31.0	163.96	108.5	-666.9	330.2	272.3	57.81	5.711	
8,100.0	8,015.4	8,084.1	8,015.4	32.8	31.3	164.31	108.5	-666.9	336.5	278.0	58.48	5.754	
8,200.0	8,115.3	8,184.0	8,115.3	33.2	31.6	164.46	108.5	-666.9	339.5	280.4	59.16	5.739	
8,239.4	8,154.8	8,223.5	8,154.8	33.3	31.7	75.98	108.5	-666.9	339.8	280.3	59.43	5.718	
8,300.0	8,215.3	8,284.0	8,215.3	33.5	31.9	75.98	108.5	-666.9	339.8	279.9	59.83	5.679	
8,400.0	8,315.3	8,384.0	8,315.3	33.8	32.3	75.98	108.5	-666.9	339.8	279.3	60.51	5.615	
8,500.0	8,415.3	8,484.0	8,415.3	34.1	32.6	75.98	108.5	-666.9	339.8	278.6	61.19	5.553	
8,600.0	8,515.3	8,584.0	8,515.3	34.4	32.9	75.98	108.5	-666.9	339.8	277.9	61.86	5.492	
8,700.0	8,615.3	8,684.0	8,615.3	34.7	33.2	75.98	108.5	-666.9	339.8	277.2	62.54	5.433	
8,800.0	8,715.3	8,784.0	8,715.3	35.0	33.6	75.98	108.5	-666.9	339.8	276.6	63.22	5.375	
8,900.0	8,815.3	8,884.0	8,815.3	35.3	33.9	75.98	108.5	-666.9	339.8	275.9	63.90	5.318	
9,000.0	8,915.3	8,984.0	8,915.3	35.6	34.2	75.98	108.5	-666.9	339.8	275.2	64.58	5.262	
9,100.0	9,015.3	9,084.0	9,015.3	35.9	34.5	75.98	108.5	-666.9	339.8	274.5	65.26	5.207	
9,200.0	9,115.3	9,184.0	9,115.3	36.3	34.9	75.98	108.5	-666.9	339.8	273.8	65.94	5.153	
9,300.0	9,215.3	9,284.0	9,215.3	36.6	35.2	75.98	108.5	-666.9	339.8	273.2	66.62	5.100	
9,400.0	9,315.3	9,384.0	9,315.3	36.9	35.5	75.98	108.5	-666.9	339.8	272.5	67.30	5.048	
9,500.0	9,415.3	9,484.0	9,415.3	37.2	35.9	75.98	108.5	-666.9	339.8	271.8	67.99	4.998	
9,600.0	9,515.3	9,584.0	9,515.3	37.5	36.2	75.98	108.5	-666.9	339.8	271.1	68.67	4.948	
9,700.0	9,615.3	9,684.0	9,615.3	37.8	36.5	75.98	108.5	-666.9	339.8	270.4	69.36	4.899	
9,800.0	9,715.3	9,784.0	9,715.3	38.2	36.8	75.98	108.5	-666.9	339.8	269.7	70.04	4.851	

CC - Min centre to center distance or covergent point, SF - min separation factor, ES - min ellipse separation

Anticollision Report

Company:	NEW MEXICO	**Local Co-ordinate Reference**	Well LOS VAQUEROS FED 111H
Project:	(SP) LEA	**TVD Reference:**	KB @ 3217.2usft
Reference Site:	LOS VAQUEROS FED PROJECT	**MD Reference:**	KB @ 3217.2usft
Site Error:	0.0 usft	**North Reference:**	Grid
Reference Well:	LOS VAQUEROS FED 111H	**Survey Calculation Method:**	Minimum Curvature
Well Error:	0.0 usft	**Output errors are at**	2.00 sigma
Reference Wellbore	OWB	**Database:**	Compass_17
Reference Design:	PWP0	**Offset TVD Reference:**	Offset Datum

Offset Design LOS VAQUEROS FED PROJECT - LOS VAQUEROS FED 151H - OWB - PWP0

Offset Site Error: 0.0 usft

Survey Program: 0-MWD

Offset Well Error: 0.0 usft

Reference Measured Depth (usft)	Reference Vertical Depth (usft)	Offset Measured Depth (usft)	Offset Vertical Depth (usft)	Semi Major Axis Reference (usft)	Semi Major Axis Offset (usft)	Highside Toolface (°)	Offset Wellbore Centre +N/-S (usft)	Offset Wellbore Centre +E/-W (usft)	Distance Between Centres (usft)	Distance Between Ellipses (usft)	Minimum Separation (usft)	Separation Factor	Rule Assigned: Warning
9,900.0	9,815.3	9,884.0	9,815.3	38.5	37.2	75.98	108.5	-666.9	339.8	269.0	70.73	4.804	
10,000.0	9,915.3	9,984.0	9,915.3	38.8	37.5	75.98	108.5	-666.9	339.8	268.4	71.42	4.758	
10,100.0	10,015.3	10,084.0	10,015.3	39.1	37.8	75.98	108.5	-666.9	339.8	267.7	72.10	4.712	
10,200.0	10,115.3	10,184.0	10,115.3	39.4	38.2	75.98	108.5	-666.9	339.8	267.0	72.79	4.668	
10,257.2	10,172.5	10,241.2	10,172.5	39.6	38.4	75.98	108.5	-666.9	339.8	266.6	73.19	4.643	
10,275.0	10,190.3	10,259.0	10,190.3	39.7	38.4	-103.56	108.5	-666.9	339.9	266.5	73.31	4.636	
10,300.0	10,215.3	10,284.0	10,215.3	39.8	38.5	-103.78	108.5	-666.9	340.2	266.7	73.49	4.630	
10,325.0	10,240.1	10,308.8	10,240.1	39.8	38.6	-104.17	108.5	-666.9	340.9	267.3	73.68	4.627	
10,350.0	10,264.7	10,333.5	10,264.7	39.9	38.7	-104.71	108.5	-666.9	342.0	268.1	73.87	4.629	
10,375.0	10,289.1	10,357.9	10,289.1	40.0	38.8	-105.41	108.5	-666.9	343.4	269.4	74.08	4.636	
10,400.0	10,313.2	10,381.9	10,313.2	40.1	38.8	-106.23	108.5	-666.9	345.3	271.1	74.29	4.649	
10,425.0	10,336.9	10,405.6	10,336.9	40.1	38.9	-107.16	108.5	-666.9	347.8	273.2	74.51	4.667	
10,450.0	10,360.1	10,428.8	10,360.1	40.2	39.0	-108.16	108.5	-666.9	350.7	276.0	74.75	4.693	
10,475.0	10,382.9	10,451.6	10,382.9	40.3	39.1	-109.22	108.5	-666.9	354.4	279.4	74.98	4.726	
10,500.0	10,405.0	10,473.7	10,405.0	40.3	39.1	-110.29	108.5	-666.9	358.7	283.5	75.23	4.769	
10,525.0	10,426.5	10,497.1	10,428.4	40.4	39.2	-111.51	108.5	-666.9	363.9	288.4	75.51	4.819	
10,550.0	10,447.3	10,529.2	10,460.5	40.4	39.3	-113.33	107.0	-666.8	369.5	293.6	75.88	4.870	
10,575.0	10,467.4	10,563.0	10,494.0	40.5	39.4	-115.12	103.1	-666.8	375.3	299.1	76.17	4.927	
10,600.0	10,486.6	10,598.7	10,529.0	40.6	39.5	-116.88	96.5	-666.8	381.1	304.8	76.36	4.991	
10,625.0	10,505.0	10,636.3	10,565.3	40.6	39.6	-118.59	86.6	-666.7	387.0	310.6	76.41	5.065	
10,650.0	10,522.5	10,676.0	10,602.7	40.7	39.7	-120.25	73.2	-666.6	392.8	316.5	76.29	5.149	
10,675.0	10,539.0	10,718.0	10,640.8	40.7	39.8	-121.83	55.6	-666.4	398.4	322.4	75.98	5.243	
10,700.0	10,554.5	10,762.3	10,679.3	40.7	40.0	-123.31	33.6	-666.2	403.7	328.2	75.46	5.349	
10,725.0	10,569.0	10,809.0	10,717.3	40.8	40.1	-124.67	6.6	-666.0	408.5	333.7	74.74	5.465	
10,750.0	10,582.4	10,858.0	10,754.3	40.8	40.1	-125.86	-25.6	-665.7	412.7	338.9	73.84	5.589	
10,775.0	10,594.6	10,909.1	10,789.0	40.9	40.2	-126.86	-63.0	-665.4	416.3	343.4	72.82	5.716	
10,800.0	10,605.7	10,962.0	10,820.6	40.9	40.3	-127.64	-105.4	-665.0	419.0	347.2	71.77	5.838	
10,825.0	10,615.6	11,016.4	10,848.0	41.0	40.4	-128.17	-152.3	-664.6	420.8	350.0	70.81	5.943	
10,850.0	10,624.3	11,071.5	10,870.1	41.0	40.4	-128.43	-202.8	-664.2	421.7	351.7	70.06	6.020	
10,875.0	10,631.8	11,127.0	10,886.4	41.0	40.5	-128.40	-255.8	-663.7	421.7	352.0	69.63	6.056	
10,900.0	10,638.0	11,182.1	10,896.3	41.1	40.6	-128.10	-310.0	-663.3	420.6	351.0	69.60	6.043	
10,925.0	10,642.9	11,236.2	10,899.9	41.1	40.7	-127.52	-363.9	-662.8	418.6	348.6	69.99	5.980	
10,950.0	10,646.5	11,263.6	10,900.0	41.2	40.7	-127.29	-391.4	-662.6	416.3	346.0	70.35	5.918	
10,975.0	10,648.9	11,288.5	10,900.0	41.2	40.8	-127.18	-416.3	-662.3	414.9	344.3	70.63	5.875	
11,000.0	10,649.9	11,313.5	10,900.0	41.3	40.8	-127.12	-441.2	-662.1	414.3	343.5	70.84	5.848	
11,007.2	10,650.0	11,320.7	10,900.0	41.3	40.9	-127.12	-448.4	-662.1	414.3	343.4	70.89	5.844	
11,100.0	10,650.0	11,413.5	10,900.0	41.6	41.1	-127.12	-541.2	-661.3	414.3	342.7	71.54	5.791	
11,200.0	10,650.0	11,513.5	10,900.0	41.9	41.5	-127.12	-641.2	-660.4	414.3	341.9	72.34	5.727	
11,300.0	10,650.0	11,613.5	10,900.0	42.3	41.9	-127.12	-741.2	-659.5	414.3	341.0	73.24	5.656	
11,400.0	10,650.0	11,713.5	10,900.0	42.7	42.4	-127.12	-841.2	-658.7	414.3	340.0	74.23	5.581	
11,500.0	10,650.0	11,813.5	10,900.0	43.3	42.9	-127.12	-941.2	-657.8	414.3	338.9	75.31	5.501	
11,600.0	10,650.0	11,913.5	10,900.0	43.8	43.6	-127.12	-1,041.2	-657.0	414.2	337.8	76.48	5.417	
11,700.0	10,650.0	12,013.5	10,900.0	44.5	44.2	-127.12	-1,141.2	-656.1	414.2	336.5	77.73	5.329	
11,800.0	10,650.0	12,113.5	10,900.0	45.2	45.0	-127.12	-1,241.2	-655.2	414.2	335.2	79.06	5.240	
11,900.0	10,650.0	12,213.5	10,900.0	45.9	45.7	-127.12	-1,341.2	-654.4	414.2	333.8	80.46	5.148	
12,000.0	10,650.0	12,313.5	10,900.0	46.7	46.6	-127.12	-1,441.2	-653.5	414.2	332.3	81.94	5.055	
12,100.0	10,650.0	12,413.5	10,900.0	47.6	47.4	-127.12	-1,541.2	-652.6	414.2	330.7	83.48	4.962	
12,200.0	10,650.0	12,513.5	10,900.0	48.5	48.3	-127.12	-1,641.2	-651.8	414.2	329.1	85.09	4.868	
12,300.0	10,650.0	12,613.5	10,900.0	49.4	49.3	-127.12	-1,741.2	-650.9	414.2	327.5	86.76	4.775	
12,400.0	10,650.0	12,713.5	10,900.0	50.3	50.2	-127.12	-1,841.2	-650.1	414.2	325.7	88.48	4.682	
12,500.0	10,650.0	12,813.5	10,900.0	51.3	51.3	-127.12	-1,941.2	-649.2	414.2	324.0	90.26	4.589	

CC - Min centre to center distance or covergent point, SF - min separation factor, ES - min ellipse separation

Anticollision Report

Company:	NEW MEXICO	**Local Co-ordinate Reference**	Well LOS VAQUEROS FED 111H
Project:	(SP) LEA	**TVD Reference:**	KB @ 3217.2usft
Reference Site:	LOS VAQUEROS FED PROJECT	**MD Reference:**	KB @ 3217.2usft
Site Error:	0.0 usft	**North Reference:**	Grid
Reference Well:	LOS VAQUEROS FED 111H	**Survey Calculation Method:**	Minimum Curvature
Well Error:	0.0 usft	**Output errors are at**	2.00 sigma
Reference Wellbore	OWB	**Database:**	Compass_17
Reference Design:	PWP0	**Offset TVD Reference:**	Offset Datum

Offset Design LOS VAQUEROS FED PROJECT - LOS VAQUEROS FED 151H - OWB - PWP0

Offset Site Error: 0.0 usft

Survey Program: 0-MWD

Offset Well Error: 0.0 usft

Reference Measured Depth (usft)	Reference Vertical Depth (usft)	Offset Measured Depth (usft)	Offset Vertical Depth (usft)	Semi Major Axis Reference (usft)	Semi Major Axis Offset (usft)	Highside Toolface (°)	Offset Wellbore Centre +N/-S (usft)	Offset Wellbore Centre +E/-W (usft)	Distance Between Centres (usft)	Distance Between Ellipses (usft)	Minimum Separation (usft)	Separation Factor	Rule Assigned: Warning
12,600.0	10,650.0	12,913.5	10,900.0	52.4	52.3	-127.13	-2,041.2	-648.3	414.2	322.1	92.08	4.498	
12,700.0	10,650.0	13,013.5	10,900.0	53.4	53.4	-127.13	-2,141.2	-647.5	414.2	320.2	93.96	4.408	
12,800.0	10,650.0	13,113.5	10,900.0	54.5	54.5	-127.13	-2,241.2	-646.6	414.2	318.3	95.88	4.320	
12,900.0	10,650.0	13,213.5	10,900.0	55.7	55.6	-127.13	-2,341.2	-645.8	414.2	316.4	97.84	4.233	
13,000.0	10,650.0	13,313.5	10,900.0	56.8	56.8	-127.13	-2,441.2	-644.9	414.2	314.4	99.84	4.149	
13,100.0	10,650.0	13,413.5	10,900.0	58.0	58.0	-127.13	-2,541.2	-644.0	414.2	312.3	101.88	4.066	
13,200.0	10,650.0	13,513.5	10,900.0	59.2	59.2	-127.13	-2,641.2	-643.2	414.2	310.2	103.95	3.984	
13,300.0	10,650.0	13,613.5	10,900.0	60.4	60.4	-127.13	-2,741.1	-642.3	414.2	308.1	106.06	3.905	
13,400.0	10,650.0	13,713.5	10,900.0	61.6	61.6	-127.13	-2,841.1	-641.5	414.2	306.0	108.19	3.828	
13,500.0	10,650.0	13,813.5	10,900.0	62.9	62.9	-127.13	-2,941.1	-640.6	414.2	303.8	110.36	3.753	
13,600.0	10,650.0	13,913.5	10,900.0	64.1	64.2	-127.13	-3,041.1	-639.7	414.2	301.6	112.55	3.680	
13,700.0	10,650.0	14,013.5	10,900.0	65.4	65.5	-127.13	-3,141.1	-638.9	414.2	299.4	114.77	3.609	
13,800.0	10,650.0	14,113.5	10,900.0	66.7	66.8	-127.13	-3,241.1	-638.0	414.2	297.1	117.02	3.539	
13,900.0	10,650.0	14,213.5	10,900.0	68.1	68.1	-127.13	-3,341.1	-637.1	414.2	294.9	119.29	3.472	
14,000.0	10,650.0	14,313.5	10,900.0	69.4	69.5	-127.13	-3,441.1	-636.3	414.2	292.6	121.57	3.407	
14,100.0	10,650.0	14,413.5	10,900.0	70.7	70.8	-127.13	-3,541.1	-635.4	414.2	290.3	123.88	3.343	
14,200.0	10,650.0	14,513.5	10,900.0	72.1	72.2	-127.13	-3,641.1	-634.6	414.1	287.9	126.21	3.281	
14,300.0	10,650.0	14,613.5	10,900.0	73.5	73.6	-127.13	-3,741.1	-633.7	414.1	285.6	128.56	3.221	
14,400.0	10,650.0	14,713.5	10,900.0	74.9	75.0	-127.13	-3,841.1	-632.8	414.1	283.2	130.93	3.163	
14,500.0	10,650.0	14,813.5	10,900.0	76.3	76.4	-127.13	-3,941.1	-632.0	414.1	280.8	133.31	3.107	
14,600.0	10,650.0	14,913.5	10,900.0	77.7	77.8	-127.13	-4,041.1	-631.1	414.1	278.4	135.70	3.052	
14,700.0	10,650.0	15,013.5	10,900.0	79.1	79.2	-127.13	-4,141.1	-630.3	414.1	276.0	138.12	2.998	
14,800.0	10,650.0	15,113.5	10,900.0	80.5	80.6	-127.13	-4,241.1	-629.4	414.1	273.6	140.54	2.947	
14,900.0	10,650.0	15,213.5	10,900.0	81.9	82.1	-127.13	-4,341.1	-628.5	414.1	271.1	142.98	2.896	
15,000.0	10,650.0	15,313.5	10,900.0	83.4	83.5	-127.13	-4,441.1	-627.7	414.1	268.7	145.43	2.847	
15,100.0	10,650.0	15,413.5	10,900.0	84.8	84.9	-127.14	-4,541.1	-626.8	414.1	266.2	147.90	2.800	
15,200.0	10,650.0	15,513.5	10,900.0	86.3	86.4	-127.14	-4,641.1	-626.0	414.1	263.7	150.37	2.754	
15,300.0	10,650.0	15,613.5	10,900.0	87.7	87.9	-127.14	-4,741.1	-625.1	414.1	261.2	152.86	2.709	
15,400.0	10,650.0	15,713.5	10,900.0	89.2	89.3	-127.14	-4,841.1	-624.2	414.1	258.7	155.35	2.666	
15,500.0	10,650.0	15,813.5	10,900.0	90.7	90.8	-127.14	-4,941.1	-623.4	414.1	256.2	157.86	2.623	
15,600.0	10,650.0	15,913.5	10,900.0	92.1	92.3	-127.14	-5,041.1	-622.5	414.1	253.7	160.38	2.582	
15,700.0	10,650.0	16,013.5	10,900.0	93.6	93.8	-127.14	-5,141.1	-621.6	414.1	251.2	162.90	2.542	
15,800.0	10,650.0	16,113.5	10,900.0	95.1	95.3	-127.14	-5,241.1	-620.8	414.1	248.7	165.43	2.503	
15,900.0	10,650.0	16,213.5	10,900.0	96.6	96.8	-127.14	-5,341.1	-619.9	414.1	246.1	167.98	2.465	
16,000.0	10,650.0	16,313.5	10,900.0	98.1	98.3	-127.14	-5,441.0	-619.1	414.1	243.6	170.52	2.428	
16,100.0	10,650.0	16,413.5	10,900.0	99.6	99.8	-127.14	-5,541.0	-618.2	414.1	241.0	173.08	2.392	
16,200.0	10,650.0	16,513.5	10,900.0	101.1	101.3	-127.14	-5,641.0	-617.3	414.1	238.4	175.64	2.357	
16,300.0	10,650.0	16,613.5	10,900.0	102.6	102.8	-127.14	-5,741.0	-616.5	414.1	235.9	178.21	2.323	
16,400.0	10,650.0	16,713.5	10,900.0	104.2	104.3	-127.14	-5,841.0	-615.6	414.1	233.3	180.79	2.290	
16,500.0	10,650.0	16,813.5	10,900.0	105.7	105.9	-127.14	-5,941.0	-614.8	414.1	230.7	183.38	2.258	
16,600.0	10,650.0	16,913.5	10,900.0	107.2	107.4	-127.14	-6,041.0	-613.9	414.1	228.1	185.96	2.227	
16,700.0	10,650.0	17,013.5	10,900.0	108.7	108.9	-127.14	-6,141.0	-613.0	414.1	225.5	188.56	2.196	
16,800.0	10,650.0	17,113.5	10,900.0	110.3	110.4	-127.14	-6,241.0	-612.2	414.0	222.9	191.16	2.166	
16,900.0	10,650.0	17,213.5	10,900.0	111.8	112.0	-127.14	-6,341.0	-611.3	414.0	220.3	193.77	2.137	
17,000.0	10,650.0	17,313.5	10,900.0	113.3	113.5	-127.14	-6,441.0	-610.4	414.0	217.7	196.38	2.108	
17,100.0	10,650.0	17,413.5	10,900.0	114.9	115.1	-127.14	-6,541.0	-609.6	414.0	215.0	198.99	2.081	
17,200.0	10,650.0	17,513.5	10,900.0	116.4	116.6	-127.14	-6,641.0	-608.7	414.0	212.4	201.61	2.054	
17,300.0	10,650.0	17,613.5	10,900.0	118.0	118.2	-127.14	-6,741.0	-607.9	414.0	209.8	204.24	2.027	
17,400.0	10,650.0	17,713.5	10,900.0	119.5	119.7	-127.14	-6,841.0	-607.0	414.0	207.2	206.87	2.001	
17,500.0	10,650.0	17,813.5	10,900.0	121.1	121.3	-127.15	-6,941.0	-606.1	414.0	204.5	209.50	1.976	
17,600.0	10,650.0	17,913.5	10,900.0	122.6	122.8	-127.15	-7,041.0	-605.3	414.0	201.9	212.14	1.952	

CC - Min centre to center distance or covergent point, SF - min separation factor, ES - min ellipse separation

Anticollision Report

Company:	NEW MEXICO	**Local Co-ordinate Reference**	Well LOS VAQUEROS FED 111H
Project:	(SP) LEA	**TVD Reference:**	KB @ 3217.2usft
Reference Site:	LOS VAQUEROS FED PROJECT	**MD Reference:**	KB @ 3217.2usft
Site Error:	0.0 usft	**North Reference:**	Grid
Reference Well:	LOS VAQUEROS FED 111H	**Survey Calculation Method:**	Minimum Curvature
Well Error:	0.0 usft	**Output errors are at**	2.00 sigma
Reference Wellbore	OWB	**Database:**	Compass_17
Reference Design:	PWP0	**Offset TVD Reference:**	Offset Datum

Offset Design LOS VAQUEROS FED PROJECT - LOS VAQUEROS FED 151H - OWB - PWP0

Offset Site Error: 0.0 usft

Survey Program: 0-MWD

Offset Well Error: 0.0 usft

Rule Assigned:

Reference Measured Depth (usft)	Reference Vertical Depth (usft)	Offset Measured Depth (usft)	Offset Vertical Depth (usft)	Semi Major Axis Reference (usft)	Semi Major Axis Offset (usft)	Highside Toolface (°)	Offset Wellbore Centre +N/-S (usft)	Offset Wellbore Centre +E/-W (usft)	Distance Between Centres (usft)	Distance Between Ellipses (usft)	Minimum Separation (usft)	Separation Factor	Warning
17,700.0	10,650.0	18,013.5	10,900.0	124.2	124.4	-127.15	-7,141.0	-604.4	414.0	199.2	214.78	1.928	
17,800.0	10,650.0	18,113.5	10,900.0	125.7	125.9	-127.15	-7,241.0	-603.6	414.0	196.6	217.42	1.904	
17,900.0	10,650.0	18,213.5	10,900.0	127.3	127.5	-127.15	-7,341.0	-602.7	414.0	193.9	220.07	1.881	
17,992.5	10,650.0	18,306.0	10,900.0	128.8	129.0	-127.15	-7,433.5	-601.9	414.0	191.5	222.53	1.860	
17,993.9	10,650.0	18,307.0	10,900.0	128.8	129.0	-127.15	-7,434.5	-601.9	414.0	191.5	222.54	1.860 SF	

Anticollision Report

Company:	NEW MEXICO	**Local Co-ordinate Reference**	Well LOS VAQUEROS FED 111H
Project:	(SP) LEA	**TVD Reference:**	KB @ 3217.2usft
Reference Site:	LOS VAQUEROS FED PROJECT	**MD Reference:**	KB @ 3217.2usft
Site Error:	0.0 usft	**North Reference:**	Grid
Reference Well:	LOS VAQUEROS FED 111H	**Survey Calculation Method:**	Minimum Curvature
Well Error:	0.0 usft	**Output errors are at**	2.00 sigma
Reference Wellbore	OWB	**Database:**	Compass_17
Reference Design:	PWP0	**Offset TVD Reference:**	Offset Datum

Offset Design LOS VAQUEROS FED PROJECT - LOS VAQUEROS FED 152H - OWB - PWP0

Offset Site Error: 0.0 usft

Survey Program: 0-MWD

Offset Well Error: 0.0 usft

Rule Assigned:

Reference Measured Depth (usft)	Reference Vertical Depth (usft)	Offset Measured Depth (usft)	Offset Vertical Depth (usft)	Semi Major Axis Reference (usft)	Semi Major Axis Offset (usft)	Highside Toolface (°)	Offset Wellbore Centre +N/-S (usft)	Offset Wellbore Centre +E/-W (usft)	Distance Between Centres (usft)	Distance Between Ellipses (usft)	Minimum Separation (usft)	Separation Factor	Warning
0.0	0.0	0.0	0.0	0.0	0.0	89.07	2.7	165.5	165.5				
100.0	100.0	97.8	97.8	0.3	0.2	89.07	2.7	165.5	165.5	165.0	0.50	333.445	
200.0	200.0	197.8	197.8	0.6	0.6	89.07	2.7	165.5	165.5	164.3	1.21	136.675	
300.0	300.0	297.8	297.8	1.0	1.0	89.07	2.7	165.5	165.5	163.6	1.93	85.848	
400.0	400.0	397.8	397.8	1.3	1.3	89.07	2.7	165.5	165.5	162.9	2.64	62.576	
500.0	500.0	497.8	497.8	1.7	1.7	89.07	2.7	165.5	165.5	162.1	3.36	49.231	
600.0	600.0	597.8	597.8	2.0	2.0	89.07	2.7	165.5	165.5	161.4	4.08	40.577	
700.0	700.0	697.8	697.8	2.4	2.4	89.07	2.7	165.5	165.5	160.7	4.80	34.511	
800.0	800.0	797.8	797.8	2.8	2.8	89.07	2.7	165.5	165.5	160.0	5.51	30.023	
900.0	900.0	897.8	897.8	3.1	3.1	89.07	2.7	165.5	165.5	159.3	6.23	26.567	
1,000.0	1,000.0	997.8	997.8	3.5	3.5	89.07	2.7	165.5	165.5	158.6	6.95	23.825	
1,100.0	1,100.0	1,097.8	1,097.8	3.8	3.8	89.07	2.7	165.5	165.5	157.8	7.66	21.596	
1,200.0	1,200.0	1,197.8	1,197.8	4.2	4.2	89.07	2.7	165.5	165.5	157.1	8.38	19.749	
1,300.0	1,300.0	1,297.8	1,297.8	4.6	4.5	89.07	2.7	165.5	165.5	156.4	9.10	18.192	
1,400.0	1,400.0	1,397.8	1,397.8	4.9	4.9	89.07	2.7	165.5	165.5	155.7	9.81	16.863	
1,500.0	1,500.0	1,497.8	1,497.8	5.3	5.3	89.07	2.7	165.5	165.5	155.0	10.53	15.715	
1,600.0	1,600.0	1,597.8	1,597.8	5.6	5.6	89.07	2.7	165.5	165.5	154.3	11.25	14.714	
1,700.0	1,700.0	1,697.8	1,697.8	6.0	6.0	89.07	2.7	165.5	165.5	153.5	11.97	13.832	
1,800.0	1,800.0	1,797.8	1,797.8	6.3	6.3	89.07	2.7	165.5	165.5	152.8	12.68	13.050	
1,900.0	1,900.0	1,897.8	1,897.8	6.7	6.7	89.07	2.7	165.5	165.5	152.1	13.40	12.352	
2,000.0	2,000.0	1,997.8	1,997.8	7.1	7.1	89.07	2.7	165.5	165.5	151.4	14.12	11.725	CC, ES
2,100.0	2,100.0	2,092.5	2,092.5	7.4	7.4	177.47	3.0	166.9	168.8	154.0	14.79	11.410	SF
2,200.0	2,199.8	2,186.4	2,186.3	7.8	7.7	177.22	4.1	171.4	178.8	163.3	15.44	11.577	
2,300.0	2,299.5	2,279.1	2,278.6	8.1	8.0	176.86	5.8	178.7	195.4	179.3	16.07	12.156	
2,400.0	2,398.7	2,369.9	2,368.9	8.5	8.4	176.43	8.1	188.7	218.4	201.8	16.68	13.097	
2,500.0	2,497.5	2,458.4	2,456.5	8.8	8.7	176.00	11.1	201.1	247.9	230.6	17.26	14.360	
2,600.0	2,595.9	2,549.0	2,545.7	9.2	9.0	175.61	14.6	216.1	281.4	263.6	17.87	15.745	
2,700.0	2,694.4	2,643.0	2,638.3	9.6	9.4	175.28	18.3	232.0	315.3	296.8	18.53	17.013	
2,800.0	2,792.9	2,737.1	2,731.0	10.0	9.7	175.01	22.1	247.9	349.2	330.0	19.20	18.191	
2,900.0	2,891.4	2,831.2	2,823.6	10.3	10.1	174.79	25.8	263.8	383.1	363.3	19.87	19.286	
3,000.0	2,989.9	2,925.2	2,916.2	10.7	10.5	174.61	29.5	279.7	417.0	396.5	20.54	20.307	
3,100.0	3,088.3	3,019.3	3,008.9	11.1	10.8	174.45	33.2	295.6	450.9	429.7	21.21	21.260	
3,200.0	3,186.8	3,113.4	3,101.5	11.5	11.2	174.32	37.0	311.5	484.9	463.0	21.89	22.152	
3,300.0	3,285.3	3,207.4	3,194.1	12.0	11.6	174.20	40.7	327.4	518.8	496.2	22.57	22.988	
3,400.0	3,383.8	3,301.5	3,286.8	12.4	12.0	174.10	44.4	343.3	552.7	529.4	23.25	23.773	
3,500.0	3,482.3	3,395.6	3,379.4	12.8	12.4	174.01	48.2	359.3	586.6	562.7	23.93	24.511	
3,600.0	3,580.8	3,489.6	3,472.1	13.2	12.7	173.93	51.9	375.2	620.5	595.9	24.62	25.205	
3,700.0	3,679.2	3,583.7	3,564.7	13.6	13.1	173.85	55.6	391.1	654.4	629.1	25.31	25.860	
3,800.0	3,777.7	3,677.8	3,657.3	14.0	13.5	173.79	59.4	407.0	688.4	662.4	26.00	26.479	
3,900.0	3,876.2	3,771.8	3,750.0	14.5	13.9	173.73	63.1	422.9	722.3	695.6	26.69	27.065	
4,000.0	3,974.7	3,865.9	3,842.6	14.9	14.3	173.68	66.8	438.8	756.2	728.8	27.38	27.619	
4,100.0	4,073.2	3,960.0	3,935.3	15.3	14.7	173.63	70.6	454.7	790.1	762.1	28.07	28.144	
4,200.0	4,171.6	4,054.0	4,027.9	15.7	15.1	173.58	74.3	470.6	824.1	795.3	28.77	28.643	
4,300.0	4,270.1	4,148.1	4,120.5	16.2	15.5	173.54	78.0	486.5	858.0	828.5	29.47	29.118	
4,400.0	4,368.6	4,242.2	4,213.2	16.6	15.9	173.50	81.8	502.4	891.9	861.7	30.16	29.569	
4,500.0	4,467.1	4,336.2	4,305.8	17.0	16.3	173.47	85.5	518.3	925.8	895.0	30.86	29.999	
4,600.0	4,565.6	4,430.3	4,398.5	17.5	16.7	173.43	89.2	534.2	959.8	928.2	31.56	30.409	
4,700.0	4,664.0	4,524.4	4,491.1	17.9	17.1	173.40	93.0	550.1	993.7	961.4	32.26	30.800	

CC - Min centre to center distance or covergent point, SF - min separation factor, ES - min ellipse separation

Anticollision Report

Company:	NEW MEXICO	**Local Co-ordinate Reference**	Well LOS VAQUEROS FED 111H
Project:	(SP) LEA	**TVD Reference:**	KB @ 3217.2usft
Reference Site:	LOS VAQUEROS FED PROJECT	**MD Reference:**	KB @ 3217.2usft
Site Error:	0.0 usft	**North Reference:**	Grid
Reference Well:	LOS VAQUEROS FED 111H	**Survey Calculation Method:**	Minimum Curvature
Well Error:	0.0 usft	**Output errors are at**	2.00 sigma
Reference Wellbore	OWB	**Database:**	Compass_17
Reference Design:	PWP0	**Offset TVD Reference:**	Offset Datum

Reference Depths are relative to KB @ 3217.2usft
Offset Depths are relative to Offset Datum
Central Meridian is 104° 20' 0.000 W

Coordinates are relative to: LOS VAQUEROS FED 111H
Coordinate System is US State Plane 1983, New Mexico Eastern Zone
Grid Convergence at Surface is: 0.49°

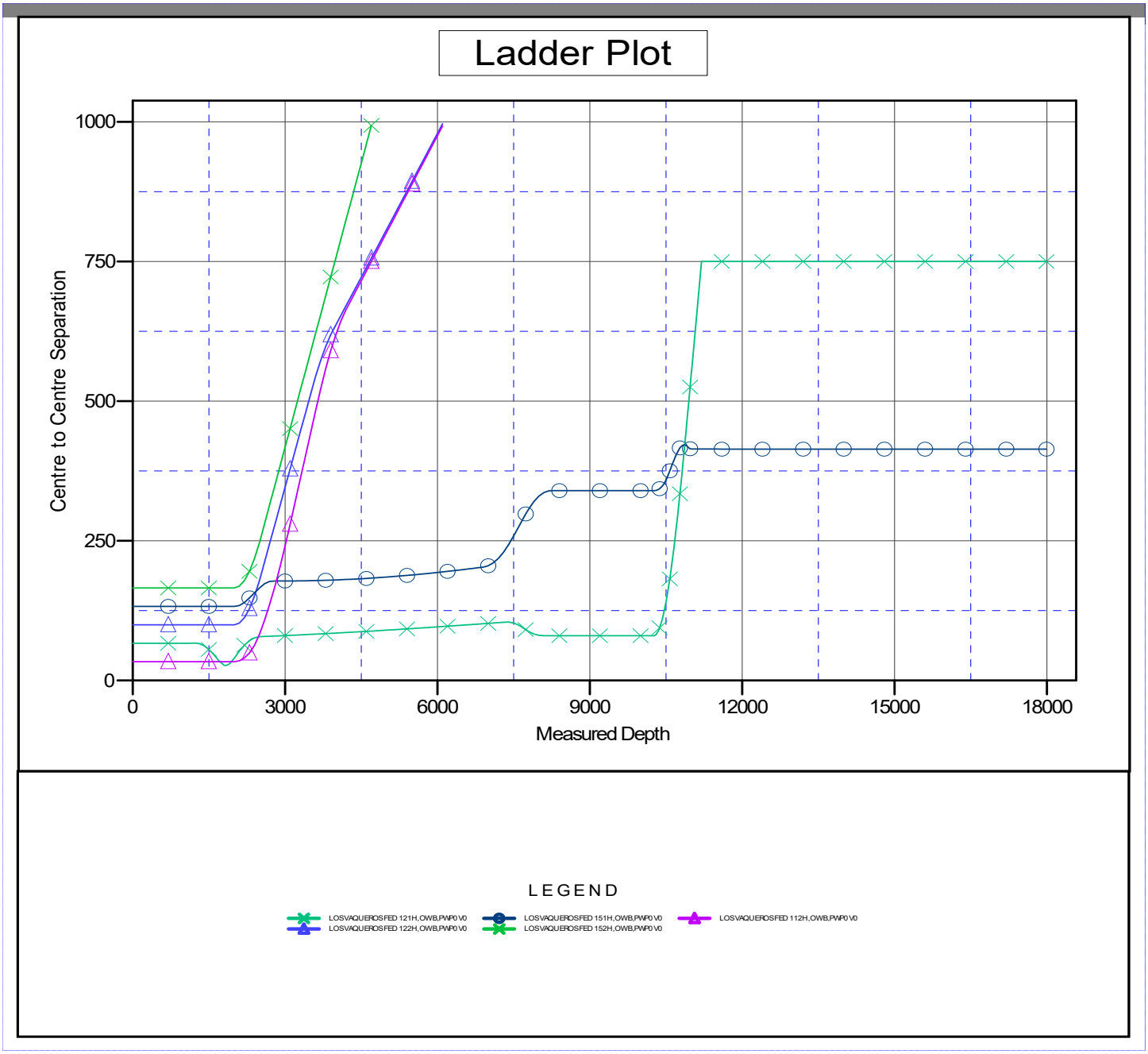

CC - Min centre to center distance or covergent point, SF - min separation factor, ES - min ellipse separation

Anticollision Report

Company:	NEW MEXICO	**Local Co-ordinate Reference**	Well LOS VAQUEROS FED 111H
Project:	(SP) LEA	**TVD Reference:**	KB @ 3217.2usft
Reference Site:	LOS VAQUEROS FED PROJECT	**MD Reference:**	KB @ 3217.2usft
Site Error:	0.0 usft	**North Reference:**	Grid
Reference Well:	LOS VAQUEROS FED 111H	**Survey Calculation Method:**	Minimum Curvature
Well Error:	0.0 usft	**Output errors are at**	2.00 sigma
Reference Wellbore	OWB	**Database:**	Compass_17
Reference Design:	PWP0	**Offset TVD Reference:**	Offset Datum

Reference Depths are relative to KB @ 3217.2usft
Offset Depths are relative to Offset Datum
Central Meridian is 104° 20' 0.000 W

Coordinates are relative to: LOS VAQUEROS FED 111H
Coordinate System is US State Plane 1983, New Mexico Eastern Zone
Grid Convergence at Surface is: 0.49°

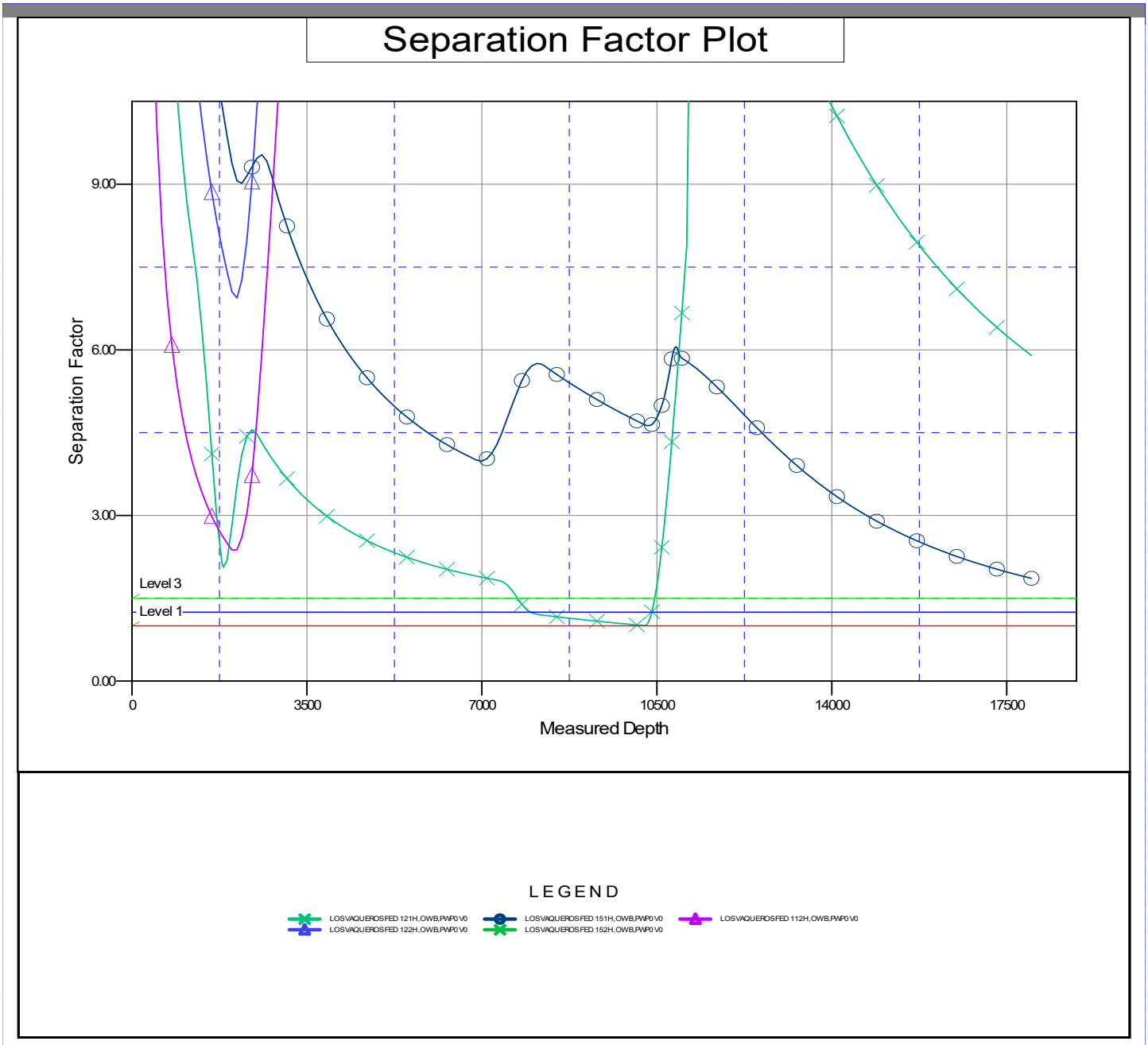

CC - Min centre to center distance or covergent point, SF - min separation factor, ES - min ellipse separation

PERMIAN RESOURCES

H_2S CONTINGENCY PLAN

FOR

Permian Resources Corporation

Los Vaqueros Fed 111H, 112H, 121H, 122H, 151H, 152H

Lea County, New Mexico

07-02-2024
This plan is subject to updating

Table of Contents

Section 1.0 – Introduction 3

I. Purpose
II. Scope & Applicability

Section 2.0 - Plan Implementation.....3

I. Activation Requirements
II. Emergency Evacuation
III. Emergency Response Activities

Section 3.0 - Potential Hazardous Conditions.....4

Section 4.0 - Notification of H2S Release Event.....6

I. Local & State Law Enforcement
II. General Public
III. New Mexico Oil Conservation Division
IV. New Mexico Environment Department
V. Bureau of Land Management

Section 5.0 - Emergency Contact List.....7

I. Permian Resources Management Personnel
II. Lea County Sheriff
III. New Mexico State Highway Patrol
IV. Fire / EMS
V. Lea County Hospital
VI. Emergency Response Contractors
VII. New Mexico Oil Conservation Division
VIII. New Mexico Environment Department
IX. Bureau of Land Management
X. Other Agencies

Section 6.0 – Drilling Location Information.....9-12

I. Site Safety Information
II. Directions to Location
III. Plat of Location including GPS Coordinates
IV. Routes of Ingress & Egress (MAP)
V. ROE Map
VI. Residences in ROE
VII. Public Roads in ROE

Section 7.0 – Hazard Communication.....13-15

I. Physical Characteristics of Hydrogen Sulfide Gas
II. Human Health Hazards / Toxicological Information
III. Environmental Hazards

Section 8.0 - Regulatory Information.....15-17

I. OSHA Information
II. New Mexico Oil Conservation Division & Bureau of Land Management

Section 9.0 - Training Requirements.....17

Section 10.0 - Personal Protective Equipment.....18

Appendices

I. Appendix A – H_2S SDS
II. Appendix B – SO_2 SDS

Section 1.0 – Introduction

I. Purpose

The purpose of this contingency plan (Plan) is to provide Permian Resources Corporation. (Permian Resources) with an organized plan of action for alerting and protecting Permian Resources employees, the general public, and any potential first responders prior to any intentional release or immediately following the accidental / unintentional release of a potentially hazardous volume / concentration of Hydrogen Sulfide Gas (H2S).

II. Scope & Applicability

This Plan applies to all planned, unplanned, uncontrolled and/or unauthorized releases of hazardous concentrations of H_2S or any associated hazardous byproducts of combustion, occurring at any Permian Resources owned or operated facilities including but not limited to: wells, flowlines, pipelines, tank batteries, production facilities, SWD facilities, compressor stations, gas processing plants, drilling / completions / workover operations, and any other applicable company owned property.

Section 2.0 - Plan Implementation

I. Activation Requirements

In accordance with the requirements of Bureau of Land Management Onshore Order #6 and NMAC 19.15.11, this Plan shall be activated in advance of any authorized, planned, unplanned, uncontrolled, or unauthorized release of a hazardous volume / concentration of H_2S gas, or SO^2, which could potentially adversely impact the workers, general public or the environment.

II. Emergency Evacuation

In the event of an unplanned, uncontrolled, or unauthorized release of a hazardous volume / concentration of H_2S gas, the first priority is to ensure the safety of the workers and general public. Upon discovery and subsequent determination of an applicable release, which cannot be quickly mitigated, immediately by using 911, notify local authorities to begin the process of alerting the general public, evacuate any residents within the Radius of Exposure (ROE), and limit any general public or employee access to any areas within the ROE of the affected facility.

III. Emergency Response Activities

The purpose of emergency response actions is to take steps to quickly mitigate / stop the ongoing release of the hazardous source of H_2S. Upon discovery of any hazardous release, immediately notify Permian Resources management to activate the Emergency Response Team (ERT). Once Permian Resources supervision arrives and assesses the situation, a work plan identifying the proper procedures shall be developed to stop the release.

Section 3.0 - Potential Hazardous Conditions & Response Actions

During a planned or unplanned release of H_2S, there are several hazardous conditions that are presented both to employees, the general public, and emergency responders. These specific hazardous conditions

are identified in the tables below.

H2S OPERATING CONDITIONS – RESPONSE ACTIONS TO CONSIDER	✓
H_2S CONDITION 1: POTENTIAL DANGER TO LIFE AND HEALTH –> WARNING SIGN GREEN	
H_2S concentration <10 ppm detected by location monitors	❑
General Actions During Condition 1	❑
Notify Site Supervisor / Permian Resources Person-in-Charge (PIC) of any observed increase in ambient H_2S concentrations	❑
All personnel check safety equipment is in adequate working order & store in accessible location	❑
Sensitize crews with safety meetings.	❑
Limit visitors and non-essential personnel on location	❑
Continuously monitor H_2S concentrations and check calibration of sensors	❑
Ensure H_2S scavenger is on location.	❑
H_2S CONDITION 2: MODERATE DANGER TO LIFE AND HEALTH → WARNING SIGN YELLOW	
H_2S concentration >10 ppm and < 30 ppm in atmosphere detected by location monitors:	❑
General Actions During Condition 2	❑
Sound H_2S alarm and/or display yellow flag.	❑
Account for on-site personnel	❑
Upon sounding of an area or personal H_2S monitor alarm when 10 ppm is reached, proceed to a safe briefing area upwind of the location immediately (see **MA-4**, **Figure 5-1**).	❑
Don proper respiratory protection.	❑
Alert other affected personnel	❑
If trained and safe to do so undertake measures to control source H2S discharge and eliminate possible ignition sources. Initiate Emergency Shutdown procedures as deemed necessary to correct or control the specific situation.	❑
Account for on-site personnel at safe briefing area.	❑
Stay in safe briefing area if not working to correct the situation.	❑
Keep Site Supervisor / Permian Resources PIC informed. Notify applicable government agencies **(Appendix A)** If off-site impact; notify any neighbors within Radius of Exposure **(ROE)**, **Fig 5.11**	❑
Continuously monitor H_2S until readings below 10 ppm.	❑
Evacuated area shall not be re-entered except by trained and authorized personnel utilizing appropriate respiratory protection; or until "all clear" sounded by Permian Resources PIC / Site Supervisor.	

H_2S CONDITION 3: EXTREME DANGER TO LIFE AND HEALTH → WARNING SIGN RED	
> **30 ppm H_2S** concentration in air detected by location monitors: Extreme danger to life	❑
General Actions During Condition 3	❑
Sound H_2S alarm and/or display red flag.	❑
Account for on-site personnel	❑
Move away from H_2S source and get out of the affected area.	❑
Proceed to designated safe briefing area; alert other affected personnel.	❑
Account for personnel at safe briefing area.	❑
If trained and safe to do so undertake measures to control source H2S discharge and eliminate possible ignition sources. Initiate Emergency Shutdown procedures as deemed necessary to correct or control the specific situation.	❑
Notify vehicles or situation and divert all traffic away from location.	❑
Permian Resources Peron-in-Charge will make appropriate community notifications.	❑
Red warning flag must be on display until the situation has been corrected and the Permian Resources Person-in-Charge determines it is safe to resume operations under **Condition 1**.	❑
Notify management of the condition and action taken. If H_2S concentration is increasing and steps to correct the situation are not successful – or at any time if well control is questionable – alert all responsible parties for possible activation of the H_2S Contingency Plan. If well control at the surface is lost, determine if situation warrants igniting the well.	❑
If uncontrolled flow at the surface occurs, the Permian Resources PIC, with approval, if possible, from those coordinating the emergency **(as specified in the site-specific H_2S Contingency Plan)** are responsible for determining if the situation warrants igniting the flow of the uncontrolled well. This decision should be made only as a last resort and in a situation where it is obvious that human life is in danger and there is no hope of controlling the flow under prevailing conditions.	❑
If the flow is ignited, burning H_2S will be converted to sulfur dioxide (SO_2), which is also highly toxic. Do not assume that area is safe after the flow is ignited. If the well is ignited, evacuation of the area is mandatory, because SO_2 will remain in low-lying places under no-wind conditions.	❑
Keep Site Supervisor / Permian Resources PIC informed. Notify applicable government agencies and local law enforcement **(Appendix A)** If off-site impact; notify any neighbors within the Radius of Exposure **(ROE)**, see example in **Figure 5-11.**	❑
Continuously monitor H_2S until readings fall below 10 ppm.	❑
Evacuated area shall not be re-entered except by trained and authorized personnel utilizing appropriate respiratory protection; or until "all clear" sounded by Permian Resources PIC / Site Supervisor.	❑
IF ABOVE ACTIONS CANNOT BE ACCOMPLISHED IN TIME TO PREVENT EXPOSURE TO THE PUBLIC	

Alert public (directly or through appropriate government agencies) who may be subject to potentially harmful exposure levels.	❑
Make recommendations to public officials regarding blocking unauthorized access to the unsafe area and assist as appropriate.	❑
Make recommendations to public officials regarding evacuating the public and assist as appropriate.	❑
Monitor ambient air in the area of exposure (after following abatement measures) to determine when it is safe for re-entry.	❑

Section 4.0 - Notification of H_2S Release Event

I. Local & State Law Enforcement

Prior to the planned / controlled release of a hazardous concentration of H_2S gas or any associated byproducts of the combustion of H_2S gas, notify local law enforcement agencies regarding the contents of this plan.

In the event of the discovery of an unplanned/uncontrolled release of a hazardous concentration of H_2S gas or any associated byproducts of combustion, immediately notify local and/or state law enforcement agencies of the situation and ask for their assistance.

II. General Public

In the event of a planned or unplanned release of a hazardous concentration of H_2S gas or any associated byproducts of combustion, notify local law enforcement agencies and ask for their assistance in alerting the general public and limiting access to any public roads that may be impacted by such a release.

III. New Mexico Oil Conservation Division

The Permian Resources HSE Department will make any applicable notification to the New Mexico OCD regarding any release of a hazardous concentration of H_2S Gas or any associated byproducts of combustion.

IV. New Mexico Environment Department

The Permian Resources HSE Department will make any applicable notifications to the NMED regarding any release of a hazardous concentration of H_2S gas or any associated byproducts of combustion.

V. **Bureau of Land Management**

The Permian Resources Regulatory Department will make any applicable notifications to the BLM regarding any release of a hazardous concentration of H_2S gas or any associated byproducts of combustion.

Permian Resources Corporation	H_2S Contingency Plan Los Vaqueros Fed 111H, 112H, 121H, 122H, 151H, 152H	Lea County, New Mexico

Section 5.0 - Emergency Contact List

EMERGENCY CONTACT LIST				
PERMIAN RESOURCES CORPORATION.				
POSITION	**NAME**	**OFFICE**	**CELL**	**ALT PHONE**
Operations				
Production Superintendent	Rick Lawson		432.530.3188	
TX Production Superintendent	Josh Graham	432.940.3191	432.940.3191	
NM Production Superintendent	Manual Mata	432.664.0278	575.408.0216	
Drilling Manager	Jason Fitzgerald	432.315.0146	318.347.3916	
Drilling Engineer	Parker Simmons	432.400.1038	281.536.9813	
Production Manager	Levi Harris	432.219.8568	720.261.4633	
SVP Development Ops	Clayton Smith	720.499.1416	361.215.2494	
SVP Production Ops	Casey McCain	432.695.4239	432.664.6140	
HSE & Regulatory				
H&S Manager	Adam Hicks	720.499.2377	903.426.4556	
Regulatory Manager	Stephanie Rabadue		432.260.4388	
Environmental Manager	Montgomery Floyd	432-315-0123	432-425-8321	
HSE Consultant	Blake Wisdom		918-323-2343	
Local, State, & Federal Agencies				
Lea County Sheriff		575-396-3611		911
New Mexico State Highway Patrol		505-757-2297		911
Eunice Fire / EMS		575-394-3258		911
Lea County Hospital		575-492-5000		
Secorp – Safety Contractor	Ricky Stephens		(325)-262-0707	
New Mexico Oil Conservation Division – District 1 Office – Hobbs, NM.		575-393-6161		
New Mexico Environment Department – District III Office – Hobbs, NM		575-397-6910		
New Mexico Oil Conservation Division – Hobbs, NM	24 Hour Emergency	575-393-6161		
Bureau of Land Management – Carlsbad, NM		575-706-2779		
Lea County PET Inspector		575-689-5981		
U.S. Fish & Wildlife		502-248-6911		

Section 6.0 – Drilling Location Information

I. Site Safety Information

1. Safe Briefing Area
   a. There shall be two areas that will be designated as "SAFE BRIEFING AREAs". If H_2S is detected in concentrations equal to or in excess of 10 ppm all personnel not assigned emergency duties are to assemble in the designated Safe Briefing area for instructions. These two areas shall be positioned in accessible locations to facilitate the availability of self-contained breathing air devices. The briefing areas shall be positioned no less than 250' from the wellhead and in such locations that at least one briefing area will be up-wind from the well at all times.

2. Wind Indicators
   a. 4 Windsocks will be installed at strategic points on the facility.
3. Danger Signs
   a. A warning sign indicating the possible well conditions will be displayed at the location entrance.

DANGER
POISONOUS GAS
HYDROGEN SULFIDE
DO NOT APPROACH IF AMBER LIGHTS ARE FLASHING

4. H_2S Detectors and Alarms
   a. Continuous monitoring type H_2S detectors, capable of sensing a minimum of 5ppm H_2S in air will be located centrally located at the tanks, heater treater, and combustor. Continuous monitoring type SO_2 detector will also be located at the combustor. The automatic H_2S alarm/flashing light will be located at the site entrance and in front of tank battery.

5. Safety Trailer
   a. A safety trailer equipped with an emergency cascade breathing air system with 2 ea. Work/escape packs, a stretcher, 2 OSHA approved full body harnesses, and a 20# Class ABC fire extinguisher shall be available at the site in close proximity to the safe briefing area. The cascade system shall be able to be deployed to the drill floor when needed to provide safe breathing air to the workers as needed.

6. Well Control Equipment
   a. The location shall have a flare line to a remote automatic ignitor and back up flare gun, placed 150' from the wellhead.
   b. The location shall be equipped with a remotely operated choke system and a mud gas separator.

7. Mud Program
   a. Company shall have a mud program that contains sufficient weight and additives to control H_2S.

8. Metallurgy
   a. All drill strings, casing, tubing, wellhead, BOP, spools, kill lines, choke manifold and lines, and valves shall be suitable for anticipated H_2S volume and pressure.

9. Communication
   a. The location shall be equipped with a means of effective communication such as a cell phones, intercoms, satellite phones or landlines.

II. Directions to Location

FROM THE INTERSECTION OF CR-C3 AND WHITWORTH DR. IN JAL, NEW MEXICO

1. MOVE SOUTHWEST ON CR-C3 APPROX.7 MILES.
2. KEEP RIGHT ONTO NM-322 AND CONTINUE MOVE SOUTHWEST APPROX. 2742 FEET.
3. TURN RIGHT ONTO BECKHAM RD. AND MOVE WEST APPROX. 2 MILES.
4. KEEP LEFT ONTO LEASE ROAD AND CONTINUE MOVE WEST APPROX. 3 MILES.
5. TURN RIGHT AND MOVE NORTH APPROX. 2174 FEET.
6. TURN LEFT AND MOVE WEST APPROX. 3.4 MILES.
7. TURN RIGHT AND MOVE APPROX. 500 FEET.
8. TURN LEFT AND MOVE WEST APPROX. 2697 FEET.
9. TURN LEFT AND MOVE SOUTH APPROX. 2320 FEET.
10. TURN LEFT AND MOVE APPROX. 588 FEET.
11. TURN RIGHT AND MOVE SOUTH APPROX. 140 FEET TO NORTH WEST PAD CORNER.

Section 7.0 – Hazard Communication

I. Physical Characteristics of Hydrogen Sulfide Gas

Hydrogen sulfide (H_2S) is a colorless, poisonous gas that is soluble in water. It can be present in crude oils, condensates, natural gas and wastewater streams.

H_2S is heavier than air with a vapor density of 1.189 (air = 1.0); however, H_2S is most often mixed with other gases. These mixtures of H_2S and other gases can be heavier or lighter than air. If the H_2S-containing mixture is heavier, it can collect in low areas such as ditches, ravines, firewalls, and pits; in storage tanks; and in areas of poor ventilation. Please see physical properties in **Table 7.0.**

With H_2S the sense of smell is rapidly lost allowing lethal concentrations to be accumulated without warning. The toxicity of hydrogen sulfide at varying concentrations is indicated in the **Table 7.1.**

Warning: Do not use the mouth-to-mouth method if a victim ingested or inhaled hydrogen sulfide. Give artificial respiration with the aid of a pocket mask equipped with a one-way valve or other proper respiratory medical device.

Table 7.0. Physical Properties of H_2S

Properties of H2S	Description
Vapor Density > 1 = 1.189 Air = 1	▪ H2S gas is slightly heavier than air, which can cause it to settle in low places and build in concentration. ▪ Produced as a mixture with other gases associated with oil and gas production.
Flammable Range 4.3%-46% 43000 ppm – 460000 ppm	▪ H2S can be extremely flammable / explosive when these concentrations are reached by volume in air.

Although H_2S is primarily a respiratory hazard, it is also flammable and forms an explosive mixture at concentrations of 4.3%–46.0% (40,000ppm – 460,000 ppm) by volume in air.

H_2S can be encountered when:

- Venting and draining equipment.
- Opening equipment (separators, pumps, and tanks).
- Opening piping connections ("line breaking").
- Gauging and sampling storage tanks.
- Entering confined spaces.
- Working around wastewater pits, skimmers, and treatment facilities.

II. Human Health Hazards - Toxicological Information

Table 7.1. Hazards & Toxicity

Concentration (ppm)	Symptoms/Effects

0.00011-0.00033 ppm	Typical background concentrations
0.01-1.5 ppm	Odor threshold (when rotten egg smell is first noticeable to some). Odor becomes more offensive at 3-5 ppm. Above 30 ppm, odor described as sweet or sickeningly sweet.
2-5 ppm	Prolonged exposure may cause nausea, tearing of the eyes, headaches or loss of sleep. Airway problems (bronchial constriction) in some asthma patients.
20 ppm	Possible fatigue, loss of appetite, headache, irritability, poor memory, dizziness.
50-100 ppm	Slight conjunctivitis ("gas eye") and respiratory tract irritation after 1 hour. May cause digestive upset and loss of appetite.
100 ppm	Coughing, eye irritation, loss of smell after 2-15 minutes (olfactory fatigue). Altered breathing, drowsiness after 15-30 minutes. Throat irritation after 1 hour. Gradual increase in severity of symptoms over several hours. Death may occur after 48 hours.
100-150 ppm	Loss of smell (olfactory fatigue or paralysis).
200-300 ppm	Marked conjunctivitis and respiratory tract irritation after 1 hour. Pulmonary edema may occur from prolonged exposure.
500-700 ppm	Staggering, collapse in 5 minutes. Serious damage to the eyes in 30 minutes. Death after 30-60 minutes.
700-1000 ppm	Rapid unconsciousness, "knockdown" or immediate collapse within 1 to 2 breaths, breathing stops, death within minutes.
1000-2000 ppm	Nearly instant death

III. Environmental Hazards

H_2S and its associated byproducts from combustion presents a serious environmental hazard. Sulphur Dioxide SO_2 is produced as a constituent of flaring H_2S Gas and can present hazards associated, which are similar to H_2S. Although SO_2 is heavier than air, it will be picked up by a breeze and carried downwind at elevated temperatures. Since Sulfur Dioxide is extremely irritating to the eyes and mucous membranes of the upper respiratory tract, it has exceptionally good warning powers in this respect. The following table indicates the toxic nature of the gas. Please see the attached SDS in Appendix B for reference.

SULFUR DIOXIDE TOXICITY		
Concentration		Effects
$\%SO_2$	PPM	
0.0005	3 to 5	Pungent odor-normally a person can detect SO_2 in this range.
0.0012	12	Throat irritation, coughing, and constriction of the chest tearing and smarting of eyes.
0.15	150	So irritating that it can only be endured for a few minutes.
0.05	500	Causes a sense of suffocation, even with first breath.

Section 8.0 - Regulatory Information

I. OSHA & NIOSH Information

II. Table 8.0. OSHA & NIOSH H_2S Information

PEL, IDLH, TLV	Description
NIOSH PEL 10 PPM	▪ PEL is the Permissible Exposure Limit that an employee may be exposed up to 8 hr / day.
OSHA General Industry Ceiling PEL – 20 PPM	▪ The maximum exposure limit, which cannot be exceeded for any length of time.
IDLH 100 PPM	▪ Immediately Dangerous to Life and Health
Permian Resources PEL 10 PPM	▪ Permian Resources Policy Regarding H2S for employee safety

III. New Mexico OCD & BLM – H_2S Concentration Threshold Requirements

New Mexico NMAC 19.15.11 and Onshore Order #6 identify two Radii of Exposure (ROE) that identify potential danger to the public and require additional compliance measures. Permian Resources is required to install safety devices, establish safety procedures and develop a written H_2S contingency plan for sites where the H_2S concentrations are as follows.

Table 8.1. Calculating H_2S Radius of Exposure

H_2S Radius of Exposure	Description	Control and Equipment Requirements
100 ppm	Distance from a release to where the H_2S concentration in the air will dilute below 100ppm	ROE > 50-ft and includes any part of a "public area" (residence, school, business, etc., or any area that can be expected to be populated). ROE > 3,000-ft
500 ppm	Distance from a release to where the H_2S concentration in the air will dilute below 500ppm	ROE > 50-ft and includes any part of a public road (public roads are tax supported roads or any road used for public access or use)

Calculating H_2S Radius of Exposure

The ROE of an H_2S release is calculated to determine if a potentially hazardous volume of H_2S gas at 100 or 500 parts per million (ppm) is within a regulated distance requiring further action. If information about the concentration of H_2S and the potential gas release volume is known, the location of the Muster Areas will be set, and safety measures will be implemented based on the calculated radius of exposure (ROE). NMAC 19.15.11 – Hydrogen Sulfide Safety defines the ROE as the radius constructed with the gas's point of escape as its center and its length calculated by the following Pasquill-Gifford equations:

To determine the extent of the **100 ppm ROE**:

$x = [(1.589)\ (\text{mole fraction } H_2S)(Q)]^{(.6258)}$.

To determine the extent of the **500 ppm ROE**:

$x = [(0.4546)\ (\text{mole fraction } H_2S)(Q)]^{(.6258)}$.

Table 8.2. Calculating H2S Radius of Exposure

ROE Variable	Description
X =	ROE in feet
Q =	**Max volume of gas released determined to be released in cubic feet per day (ft^3/d)** normalized to standard temperature and pressure, 60°F and 14.65 psia
Mole fraction H_2S =	Mole fraction of H_2S in the gaseous mixture released.

The volume used as the escape rate in determining the ROE is specified in the rule as follows:

- The maximum daily volume rate of gas containing H_2S handled by that system element for which the ROE is calculated.
- For existing gas wells, the current adjusted open-flow rate, or the operator's estimate of the well's capacity to flow against zero back-pressure at the wellhead.

New Mexico Oil Conservation Division & BLM Site Requirements under NMAC 19.15.11 & Onshore Order #6

- Two cleared areas will be designated as Safe Briefing Areas. During an emergency, personnel will assemble in one of these areas for instructions from the Permian Resources Person-in-Charge. Prevailing wind direction should be considered in locating the briefing areas 200' or more on either side of the well head. One area should offset the other at an angle of 45° to 90° with respect to prevailing wind direction to allow for wind shifts during the work period.
- In the event of either an intentional or accidental releases of hydrogen sulfide, safeguards to protect the general public from the harmful effects of hydrogen sulfide must be in place for operations. A summary of the provisions in each of three H_2S ROE cases is included in **Table 8.3**.
    - **CASE 1 -**100 ppm ROE < 50'
    - **CASE 2** - 100 ppm ROE is 50' or greater, but < 3000' and does not penetrate public area.
    - **CASE 3** -100 ppm ROE is 50' or greater and penetrates a public area or 500 ppm ROE includes a public road. Also if 100 ppm ROE > 3000' regardless of public area.

Table 8.3. NMAC 19.15.11 Compliance Requirements Drilling & Production

NMAC 19.15.11 & BLM COMPLIANCE REQUIREMENTS - DRILLING & PRODUCTION			
PROVISION	**CASE 1**	**CASE 2**	**CASE 3**
H_2S Concentration Test	X	X	X
H-9	X	X	X
Training	X	X	X
District Office Notification	X	X	X
Drill Stem Tests Restricted	X*	X*	X
BOP Test	X*	X*	X
Materials		X	X
Warning and Marker		X	X
Security		X	X
Contingency Plan			X
Control and Equipment Safety			X
Monitors		X**	X**
Mud (ph Control or Scavenger)			X*
Wind Indicators		X**	X
Protective Breathing Equipment		X**	X
Choke Manifold, Secondary Remote Control, and Mud-Gas Separator			X
Flare Stacks			X*

Section 9.0 - Training Requirements

Training

The following elements are considered a minimum level of training for personnel assigned to operations who may encounter H_2S as part of routine or maintenance work.

- The hazards, characteristics, and properties of hydrogen sulfide (H_2S) and (SO_2).
- Sources of H_2S and SO_2.
- Proper use of H_2S and SO_2 detection methods used at the workplace.
- Recognition of, and proper response to, the warning signals initiated by H_2S and SO_2 detection systems in use at the workplace.
- Symptoms of H_2S exposure; symptoms of SO_2 exposure
- Rescue techniques and first aid to victims of H_2S and SO_2 exposure.
- Proper use and maintenance of breathing equipment for working in H_2S and SO_2 atmospheres, as appropriate theory and hands-on practice, with demonstrated proficiency (29 *CFR* Part 1910.134).
- Workplace practices and relevant maintenance procedures that have been established to protect personnel from the hazards of H_2S and SO_2.
- Wind direction awareness and routes of egress.
- Confined space and enclosed facility entry procedures (if applicable).
- Emergency response procedures that have been developed for the facility or operations.
- Locations and use of safety equipment.

- Locations of safe briefing areas.

Refresher training will be conducted annually.

Section 10.0 - Personal Protective Equipment

I. Personal H_2S Monitors

All personnel engaged in planned or unplanned work activity to mitigate the release of a hazardous concentration of H_2S shall have on their person a personal H2S monitor.

II. Fixed H_2S Detection and Alarms

- 4 channel H_2S monitor
- 4 wireless H_2S monitors
- H_2S alarm system (Audible/Red strobe)
- Personal gas monitor for each person on location
- Gas sample tubes

III. Flame Resistant Clothing

All personnel engaged in planned or unplanned work activity associated with this Plan shall have on the appropriate level of FRC clothing.

IV. Respiratory Protection

The following respiratory protection equipment shall be available at each drilling location.

- Working cascade system available on rig floor and pit system & 750' of air line hose
- Four (4) breathing air manifolds
- Four (4) 30-minute rescue packs
- Five (5) work/Escape units
- Five (5) escape units
- One (1) filler hose for the work/escape/rescue units

Supplied air (airline or SCBA) respiratory protection against hydrogen sulfide exposure is required in the following situations:

- When routine or maintenance work tasks involve exposure to H_2S concentrations of 10 ppm or greater.
- When a fixed location area monitor alarms, and re-entry to the work area is required to complete a job.
- When confined spaces are to be entered without knowledge of H_2S levels present, or if initial measurements are to be taken of H_2S levels.
- During rescue of employees suspected of H_2S overexposure.
- For specific tasks identified with significant exposure potential and outlined in local program guidelines.
- All respiratory equipment for hydrogen sulfide must be of the supplied-air type, equipped with pressure-demand regulators and operated in the pressure-demand mode only. This is the only type of respiratory protection recommended for hydrogen sulfide application. Equipment should be approved by NIOSH/MSHA or other recognized national authority as required. If airline units are used, a five-minute egress bottle should also be carried.
- Gas masks or other air-purifying respirators MUST NEVER BE USED FOR HYDROGEN SULFIDE due to the poor warning properties of the gas.
- Use of respiratory protection should be accompanied by a written respiratory protection program.

Appendix A
H_2S SDS

PRAXAIR

Hydrogen sulfide

Safety Data Sheet E-4611

according to the Hazardous Products Regulation (February 11, 2015)

Date of issue: 10-15-1979 Revision date: 08-10-2016 Supersedes: 10-15-2013

SECTION 1: Identification

1.1. Product identifier

Product form	:	Substance
Name	:	Hydrogen sulfide
CAS No	:	7783-06-4
Formula	:	H2S
Other means of identification	:	Hydrogen sulfide
Product group	:	Core Products

1.2. Recommended use and restrictions on use

Recommended uses and restrictions	:	Industrial use Use as directed

1.3. Supplier

Praxair Canada inc.
1200 – 1 City Centre Drive
Mississauga - Canada L5B 1M2
T 1-905-803-1600 - F 1-905-803-1682
www.praxair.ca

1.4. Emergency telephone number

Emergency number	:	1-800-363-0042 Call emergency number 24 hours a day only for spills, leaks, fire, exposure, or accidents involving this product. For routine information, contact your supplier or Praxair sales representative.

SECTION 2: Hazard identification

2.1. Classification of the substance or mixture

GHS-CA classification

Flam. Gas 1	H220
Liquefied gas	H280
Acute Tox. 2 (Inhalation: gas)	H330
STOT SE 3	H335

2.2. GHS Label elements, including precautionary statements

GHS-CA labelling

Hazard pictograms :

GHS02 GHS04 GHS06 GHS07

Signal word : DANGER

Hazard statements : **EXTREMELY FLAMMABLE GAS**
CONTAINS GAS UNDER PRESSURE; MAY EXPLODE IF HEATED
FATAL IF INHALED
MAY CAUSE RESPIRATORY IRRITATION
MAY FORM EXPLOSIVE MIXTURES WITH AIR
SYMPTOMS MAY BE DELAYED
EXTENDED EXPOSURE TO GAS REDUCES THE ABILITY TO SMELL SULFIDES

Precautionary statements : Do not handle until all safety precautions have been read and understood
Keep away from heat, hot surfaces, sparks, open flames and other ignition sources. No smoking

This document is only controlled while on the Praxair Canada Inc. website and a copy of this controlled version is available for download. Praxair cannot assure the integrity or accuracy of any version of this document after it has been downloaded or removed from our website.

Do not breathe gas
Use and store only outdoors or in a well-ventilated area
Avoid release to the environment
Wear protective gloves, protective clothing, eye protection, respiratory protection, and/or face protection
Leaking gas fire: Do not extinguish, unless leak can be stopped safely
In case of leakage, eliminate all ignition sources
Store locked up
Dispose of contents/container in accordance with container Supplier/owner instructions
Protect from sunlight when ambient temperature exceeds 52°C (125°F)
Close valve after each use and when empty
Do not open valve until connected to equipment prepared for use
When returning cylinder, install leak tight valve outlet cap or plug
Do not depend on odour to detect the presence of gas

2.3. Other hazards

Other hazards not contributing to the classification : Contact with liquid may cause cold burns/frostbite.

2.4. Unknown acute toxicity (GHS-CA)

No data available

SECTION 3: Composition/information on ingredients

3.1. Substances

Name	CAS No.	% (Vol.)	Common Name (synonyms)
Hydrogen sulfide (Main constituent)	(CAS No) 7783-06-4	100	Hydrogen sulfide (H2S) / Hydrogen sulphide / Sulfur hydride / Sulfureted hydrogen / Dihydrogen sulphide / Hydrogensulfide

3.2. Mixtures

Not applicable

SECTION 4: First-aid measures

4.1. Description of first aid measures

First-aid measures after inhalation : Remove to fresh air and keep at rest in a position comfortable for breathing. If not breathing, give artificial respiration. If breathing is difficult, trained personnel should give oxygen. Call a physician.

First-aid measures after skin contact : The liquid may cause frostbite. For exposure to liquid, immediately warm frostbite area with warm water not to exceed 105°F (41°C). Water temperature should be tolerable to normal skin. Maintain skin warming for at least 15 minutes or until normal coloring and sensation have returned to the affected area. In case of massive exposure, remove clothing while showering with warm water. Seek medical evaluation and treatment as soon as possible.

First-aid measures after eye contact : Immediately flush eyes thoroughly with water for at least 15 minutes. Hold the eyelids open and away from the eyeballs to ensure that all surfaces are flushed thoroughly. Contact an ophthalmologist immediately.

First-aid measures after ingestion : Ingestion is not considered a potential route of exposure.

4.2. Most important symptoms and effects (acute and delayed)

No additional information available

4.3. Immediate medical attention and special treatment, if necessary

Other medical advice or treatment : Obtain medical assistance. Treat with corticosteroid spray as soon as possible after inhalation.

SECTION 5: Fire-fighting measures

5.1. Suitable extinguishing media

Suitable extinguishing media : Carbon dioxide, Dry chemical, Water spray or fog. Use extinguishing media appropriate for surrounding fire.

5.2. Unsuitable extinguishing media

No additional information available

This document is only controlled while on the Praxair Canada Inc. website and a copy of this controlled version is available for download. Praxair cannot assure the integrity or accuracy of any version of this document after it has been downloaded or removed from our website.

PRAXAIR

Hydrogen sulfide

Safety Data Sheet E-4611

according to the Hazardous Products Regulation (February 11, 2015)

Date of issue: 10-15-1979 Revision date: 08-10-2016 Supersedes: 10-15-2013

5.3. Specific hazards arising from the hazardous product

Fire hazard : **EXTREMELY FLAMMABLE GAS**. If venting or leaking gas catches fire, do not extinguish flames. Flammable vapors may spread from leak, creating an explosive reignition hazard. Vapors can be ignited by pilot lights, other flames, smoking, sparks, heaters, electrical equipment, static discharge, or other ignition sources at locations distant from product handling point. Explosive atmospheres may linger. Before entering an area, especially a confined area, check the atmosphere with an appropriate device.

Explosion hazard : **EXTREMELY FLAMMABLE GAS**. Forms explosive mixtures with air and oxidizing agents.

Reactivity : No reactivity hazard other than the effects described in sub-sections below.

Reactivity in case of fire : No reactivity hazard other than the effects described in sub-sections below.

5.4. Special protective equipment and precautions for fire-fighters

Firefighting instructions : **DANGER! Toxic, flammable liquefied gas**

Evacuate all personnel from the danger area. Use self-contained breathing apparatus (SCBA) and protective clothing. Immediately cool containers with water from maximum distance. Stop flow of gas if safe to do so, while continuing cooling water spray. Remove ignition sources if safe to do so. Remove containers from area of fire if safe to do so. On-site fire brigades must comply with their provincial and local fire code regulations.

Special protective equipment for fire fighters : Standard protective clothing and equipment (Self Contained Breathing Apparatus) for fire fighters.

Other information : Containers are equipped with a pressure relief device. (Exceptions may exist where authorized by TC.).

SECTION 6: Accidental release measures

6.1. Personal precautions, protective equipment and emergency procedures

General measures : **DANGER! Toxic, flammable liquefied gas** . Forms explosive mixtures with air and oxidizing agents. Immediately evacuate all personnel from danger area. Use self-contained breathing apparatus where needed. Remove all sources of ignition if safe to do so. Reduce vapors with fog or fine water spray, taking care not to spread liquid with water. Shut off flow if safe to do so. Ventilate area or move container to a well-ventilated area. Flammable vapors may spread from leak and could explode if reignited by sparks or flames. Explosive atmospheres may linger. Before entering area, especially confined areas, check atmosphere with an appropriate device.

6.2. Methods and materials for containment and cleaning up

Methods for cleaning up : Try to stop release. Reduce vapour with fog or fine water spray. Prevent waste from contaminating the surrounding environment. Prevent soil and water pollution. Dispose of contents/container in accordance with local/regional/national/international regulations. Contact supplier for any special requirements.

6.3. Reference to other sections

For further information refer to section 8: Exposure controls/personal protection

SECTION 7: Handling and storage

7.1. Precautions for safe handling

Precautions for safe handling : Leak-check system with soapy water; never use a flame

All piped systems and associated equipment must be grounded

Keep away from heat, hot surfaces, sparks, open flames and other ignition sources. No smoking. Use only non-sparking tools. Use only explosion-proof equipment

Wear leather safety gloves and safety shoes when handling cylinders. Protect cylinders from physical damage; do not drag, roll, slide or drop. While moving cylinder, always keep in place removable valve cover. Never attempt to lift a cylinder by its cap; the cap is intended solely to protect the valve. When moving cylinders, even for short distances, use a cart (trolley, hand truck, etc.) designed to transport cylinders. Never insert an object (e.g. wrench, screwdriver, pry bar) into cap openings; doing so may damage the valve and cause a leak. Use an adjustable strap wrench to remove over-tight or rusted caps. Slowly open the valve. If the valve is hard to open, discontinue use and contact your supplier. Close the container valve after each use; keep closed even when empty. Never apply flame or localized heat directly to any part of the container. High temperatures may damage the container and could cause the pressure relief device to fail prematurely, venting the container contents. For other precautions in using this product, see section 16.

This document is only controlled while on the Praxair Canada Inc. website and a copy of this controlled version is available for download. Praxair cannot assure the integrity or accuracy of any version of this document after it has been downloaded or removed from our website.

PRAXAIR

Hydrogen sulfide

Safety Data Sheet E-4611

according to the Hazardous Products Regulation (February 11, 2015)

Date of issue: 10-15-1979 Revision date: 08-10-2016 Supersedes: 10-15-2013

7.2. Conditions for safe storage, including any incompatibilities

Storage conditions : Store only where temperature will not exceed 125°F (52°C). Post "No Smoking/No Open Flames" signs in storage and use areas. There must be no sources of ignition. Separate packages and protect against potential fire and/or explosion damage following appropriate codes and requirements (e.g. NFPA 30, NFPA 55, NFPA 70, and/or NFPA 221 in the U.S.) or according to requirements determined by the Authority Having Jurisdiction (AHJ). Always secure containers upright to keep them from falling or being knocked over. Install valve protection cap, if provided, firmly in place by hand when the container is not in use. Store full and empty containers separately. Use a first-in, first-out inventory system to prevent storing full containers for long periods. For other precautions in using this product, see section 16

OTHER PRECAUTIONS FOR HANDLING, STORAGE, AND USE: When handling product under pressure, use piping and equipment adequately designed to withstand the pressures to be encountered. Never work on a pressurized system. Use a back flow preventive device in the piping. Gases can cause rapid suffocation because of oxygen deficiency; store and use with adequate ventilation. If a leak occurs, close the container valve and blow down the system in a safe and environmentally correct manner in compliance with all international, federal/national, state/provincial, and local laws; then repair the leak. Never place a container where it may become part of an electrical circuit.

SECTION 8: Exposure controls/personal protection

8.1. Control parameters

Hydrogen sulfide (7783-06-4)		
USA - ACGIH	ACGIH TLV-TWA (ppm)	1 ppm
USA - ACGIH	ACGIH TLV-STEL (ppm)	5 ppm
USA - OSHA	OSHA PEL (Ceiling) (ppm)	20 ppm
Canada (Quebec)	VECD (mg/m³)	21 mg/m³
Canada (Quebec)	VECD (ppm)	15 ppm
Canada (Quebec)	VEMP (mg/m³)	14 mg/m³
Canada (Quebec)	VEMP (ppm)	10 ppm
Alberta	OEL Ceiling (mg/m³)	21 mg/m³
Alberta	OEL Ceiling (ppm)	15 ppm
Alberta	OEL TWA (mg/m³)	14 mg/m³
Alberta	OEL TWA (ppm)	10 ppm
British Columbia	OEL Ceiling (ppm)	10 ppm
Manitoba	OEL STEL (ppm)	5 ppm
Manitoba	OEL TWA (ppm)	1 ppm
New Brunswick	OEL STEL (mg/m³)	21 mg/m³
New Brunswick	OEL STEL (ppm)	15 ppm
New Brunswick	OEL TWA (mg/m³)	14 mg/m³
New Brunswick	OEL TWA (ppm)	10 ppm
New Foundland & Labrador	OEL STEL (ppm)	5 ppm
New Foundland & Labrador	OEL TWA (ppm)	1 ppm
Nova Scotia	OEL STEL (ppm)	5 ppm
Nova Scotia	OEL TWA (ppm)	1 ppm
Nunavut	OEL Ceiling (mg/m³)	28 mg/m³
Nunavut	OEL Ceiling (ppm)	20 ppm
Nunavut	OEL STEL (mg/m³)	21 mg/m³
Nunavut	OEL STEL (ppm)	15 ppm
Nunavut	OEL TWA (mg/m³)	14 mg/m³
Nunavut	OEL TWA (ppm)	10 ppm
Northwest Territories	OEL STEL (ppm)	15 ppm

This document is only controlled while on the Praxair Canada Inc. website and a copy of this controlled version is available for download. Praxair cannot assure the integrity or accuracy of any version of this document after it has been downloaded or removed from our website.

PRAXAIR

Hydrogen sulfide

Safety Data Sheet E-4611

according to the Hazardous Products Regulation (February 11, 2015)

Date of issue: 10-15-1979 Revision date: 08-10-2016 Supersedes: 10-15-2013

Hydrogen sulfide (7783-06-4)		
Northwest Territories	OEL TWA (ppm)	10 ppm
Ontario	OEL STEL (ppm)	15 ppm
Ontario	OEL TWA (ppm)	10 ppm
Prince Edward Island	OEL STEL (ppm)	5 ppm
Prince Edward Island	OEL TWA (ppm)	1 ppm
Québec	VECD (mg/m³)	21 mg/m³
Québec	VECD (ppm)	15 ppm
Québec	VEMP (mg/m³)	14 mg/m³
Québec	VEMP (ppm)	10 ppm
Saskatchewan	OEL STEL (ppm)	15 ppm
Saskatchewan	OEL TWA (ppm)	10 ppm
Yukon	OEL STEL (mg/m³)	27 mg/m³
Yukon	OEL STEL (ppm)	15 ppm
Yukon	OEL TWA (mg/m³)	15 mg/m³
Yukon	OEL TWA (ppm)	10 ppm

8.2. Appropriate engineering controls

Appropriate engineering controls : Use corrosion-resistant equipment. Use an explosion-proof local exhaust system. Local exhaust and general ventilation must be adequate to meet exposure standards. MECHANICAL (GENERAL): **Inadequate - Use only in a closed system**. Use explosion proof equipment and lighting.

8.3. Individual protection measures/Personal protective equipment

Personal protective equipment : Safety glasses. Face shield. Gloves.

Hand protection : Wear work gloves when handling containers. Wear heavy rubber gloves where contact with product may occur.

Eye protection : Wear goggles and a face shield when transfilling or breaking transfer connections. Select in accordance with the current CSA standard Z94.3, "Industrial Eye and Face Protection", and any provincial regulations, local bylaws or guidelines.

Respiratory protection : **Respiratory protection:** Use respirable fume respirator or air supplied respirator when working in confined space or where local exhaust or ventilation does not keep exposure below TLV. Select in accordance with provincial regulations, local bylaws or guidelines. Selection should be based on the current CSA standard Z94.4, "Selection, Care, and Use of Respirators." Respirators should also be approved by NIOSH and MSHA. For emergencies or instances with unknown exposure levels, use a self-contained breathing apparatus (SCBA).

Thermal hazard protection : Wear cold insulating gloves when transfilling or breaking transfer connections. Standard EN 511 - Cold insulating gloves.

Other information : **Other protection** : Safety shoes for general handling at customer sites. Metatarsal shoes and cuffless trousers for cylinder handling at packaging and filling plants. Select in accordance with the current CSA standard Z195, "Protective Foot Wear", and any provincial regulations, local bylaws or guidelines. For working with flammable and oxidizing materials, consider the use of flame resistant anti-static safety clothing.

SECTION 9: Physical and chemical properties

9.1. Information on basic physical and chemical properties

Physical state : Gas

Appearance : Colorless gas. Colorless liquid at low temperature or under high pressure.

Molecular mass : 34 g/mol

Colour : Colourless.

Odour : Odour can persist. Poor warning properties at low concentrations. Rotten eggs.

Odour threshold : Odour threshold is subjective and inadequate to warn of overexposure.

This document is only controlled while on the Praxair Canada Inc. website and a copy of this controlled version is available for download. Praxair cannot assure the integrity or accuracy of any version of this document after it has been downloaded or removed from our website.

pH	: Not applicable.
pH solution	: No data available
Relative evaporation rate (butylacetate=1)	: No data available
Relative evaporation rate (ether=1)	: Not applicable.
Melting point	: -86 °C
Freezing point	: -82.9 °C
Boiling point	: -60.3 °C
Flash point	: Not applicable.
Critical temperature	: 100.4 °C
Auto-ignition temperature	: 260 °C
Decomposition temperature	: No data available
Vapour pressure	: 1880 kPa
Vapour pressure at 50 °C	: No data available
Critical pressure	: 8940 kPa
Relative vapour density at 20 °C	: >=
Relative density	: No data available
Relative density of saturated gas/air mixture	: No data available
Density	: No data available
Relative gas density	: 1.2
Solubility	: Water: 3980 mg/l
Log Pow	: Not applicable.
Log Kow	: Not applicable.
Viscosity, kinematic	: Not applicable.
Viscosity, dynamic	: Not applicable.
Viscosity, kinematic (calculated value) (40 °C)	: No data available
Explosive properties	: Not applicable.
Oxidizing properties	: None.
Flammability (solid, gas)	: 4.3 - 46 vol %

9.2. Other information

Gas group	: Liquefied gas
Additional information	: Gas/vapour heavier than air. May accumulate in confined spaces, particularly at or below ground level

SECTION 10: Stability and reactivity

10.1. Reactivity

Reactivity	: No reactivity hazard other than the effects described in sub-sections below.
Chemical stability	: Stable under normal conditions.
Possibility of hazardous reactions	: May react violently with oxidants. Can form explosive mixture with air.
Conditions to avoid	: Avoid moisture in installation systems. Keep away from heat/sparks/open flames/hot surfaces. – No smoking.
Incompatible materials	: Ammonia. Bases. Bromine pentafluoride. Chlorine trifluoride. chromium trioxide. (and heat). Copper. (powdered). Fluorine. Lead. Lead oxide. Mercury. Nitric acid. Nitrogen trifluoride. nitrogen sulfide. Organic compounds. Oxidizing agents. Oxygen difluoride. Rubber. Sodium. (and moisture). Water.
Hazardous decomposition products	: Thermal decomposition may produce : Sulfur. Hydrogen.

SECTION 11: Toxicological information

11.1. Information on toxicological effects

Acute toxicity (oral)	: Not classified
Acute toxicity (dermal)	: Not classified

This document is only controlled while on the Praxair Canada Inc. website and a copy of this controlled version is available for download. Praxair cannot assure the integrity or accuracy of any version of this document after it has been downloaded or removed from our website.

Acute toxicity (inhalation) : Inhalation:gas: FATAL IF INHALED.

Hydrogen sulfide (\f)7783-06-4	
LC50 inhalation rat (mg/l)	0.99 mg/l (Exposure time: 1 h)
LC50 inhalation rat (ppm)	356 ppm/4h
ATE CA (gases)	356.00000000 ppmv/4h
ATE CA (vapours)	0.99000000 mg/l/4h
ATE CA (dust,mist)	0.99000000 mg/l/4h

Skin corrosion/irritation : Not classified
pH: Not applicable.

Serious eye damage/irritation : Not classified
pH: Not applicable.

Respiratory or skin sensitization : Not classified

Germ cell mutagenicity : Not classified

Carcinogenicity : Not classified

Reproductive toxicity : Not classified

Specific target organ toxicity (single exposure) : MAY CAUSE RESPIRATORY IRRITATION.

Specific target organ toxicity (repeated exposure) : Not classified

Aspiration hazard : Not classified

SECTION 12: Ecological information

12.1. Toxicity

Ecology - general : VERY TOXIC TO AQUATIC LIFE.

Hydrogen sulfide (7783-06-4)	
LC50 fish 1	0.0448 mg/l (Exposure time: 96 h - Species: Lepomis macrochirus [flow-through])
LC50 fish 2	0.016 mg/l (Exposure time: 96 h - Species: Pimephales promelas [flow-through])

12.2. Persistence and degradability

Hydrogen sulfide (7783-06-4)	
Persistence and degradability	Not applicable for inorganic gases.

12.3. Bioaccumulative potential

Hydrogen sulfide (7783-06-4)	
BCF fish 1	(no bioaccumulation expected)
Log Pow	Not applicable.
Log Kow	Not applicable.
Bioaccumulative potential	No data available.

12.4. Mobility in soil

Hydrogen sulfide (7783-06-4)	
Mobility in soil	No data available.
Log Pow	Not applicable.
Log Kow	Not applicable.
Ecology - soil	Because of its high volatility, the product is unlikely to cause ground or water pollution.

12.5. Other adverse effects

Other adverse effects : May cause pH changes in aqueous ecological systems.

Effect on the ozone layer : None

Effect on global warming : No known effects from this product

This document is only controlled while on the Praxair Canada Inc. website and a copy of this controlled version is available for download. Praxair cannot assure the integrity or accuracy of any version of this document after it has been downloaded or removed from our website.

PRAXAIR

Hydrogen sulfide

Safety Data Sheet E-4611

according to the Hazardous Products Regulation (February 11, 2015)

Date of issue: 10-15-1979 Revision date: 08-10-2016 Supersedes: 10-15-2013

SECTION 13: Disposal considerations

13.1. Disposal methods

Waste disposal recommendations : Do not attempt to dispose of residual or unused quantities. Return container to supplier.

SECTION 14: Transport information

14.1. Basic shipping description

In accordance with TDG

TDG

UN-No. (TDG)	: UN1053
TDG Primary Hazard Classes	: 2.3 - Class 2.3 - Toxic Gas.
TDG Subsidiary Classes	: 2.1
Proper shipping name	: HYDROGEN SULPHIDE
ERAP Index	: 500
Explosive Limit and Limited Quantity Index	: 0
Passenger Carrying Ship Index	: Forbidden
Passenger Carrying Road Vehicle or Passenger Carrying Railway Vehicle Index	: Forbidden

14.3. Air and sea transport

IMDG

UN-No. (IMDG)	: 1053
Proper Shipping Name (IMDG)	: HYDROGEN SULPHIDE
Class (IMDG)	: 2 - Gases
MFAG-No	: 117

IATA

UN-No. (IATA)	: 1053
Proper Shipping Name (IATA)	: Hydrogen sulphide
Class (IATA)	: 2

SECTION 15: Regulatory information

15.1. National regulations

Hydrogen sulfide (7783-06-4)

Listed on the Canadian DSL (Domestic Substances List)

15.2. International regulations

Hydrogen sulfide (7783-06-4)

Listed on the AICS (Australian Inventory of Chemical Substances)
Listed on IECSC (Inventory of Existing Chemical Substances Produced or Imported in China)
Listed on the EEC inventory EINECS (European Inventory of Existing Commercial Chemical Substances)
Listed on the Japanese ENCS (Existing & New Chemical Substances) inventory
Listed on the Korean ECL (Existing Chemicals List)
Listed on NZIoC (New Zealand Inventory of Chemicals)
Listed on PICCS (Philippines Inventory of Chemicals and Chemical Substances)
Listed on the United States TSCA (Toxic Substances Control Act) inventory
Listed on INSQ (Mexican national Inventory of Chemical Substances)

SECTION 16: Other information

Date of issue	: 15/10/1979
Revision date	: 10/08/2016
Supersedes	: 15/10/2013

Indication of changes:

Training advice	: Users of breathing apparatus must be trained. Ensure operators understand the toxicity hazard. Ensure operators understand the flammability hazard.

This document is only controlled while on the Praxair Canada Inc. website and a copy of this controlled version is available for download. Praxair cannot assure the integrity or accuracy of any version of this document after it has been downloaded or removed from our website.

Hydrogen sulfide

Safety Data Sheet E-4611

according to the Hazardous Products Regulation (February 11, 2015)

Date of issue: 10-15-1979 Revision date: 08-10-2016 Supersedes: 10-15-2013

Other information	: When you mix two or more chemicals, you can create additional, unexpected hazards. Obtain and evaluate the safety information for each component before you produce the mixture. Consult an industrial hygienist or other trained person when you evaluate the end product. Before using any plastics, confirm their compatibility with this product Praxair asks users of this product to study this SDS and become aware of the product hazards and safety information. To promote safe use of this product, a user should (1) notify employees, agents, and contractors of the information in this SDS and of any other known product hazards and safety information, (2) furnish this information to each purchaser of the product, and (3) ask each purchaser to notify its employees and customers of the product hazards and safety information The opinions expressed herein are those of qualified experts within Praxair Canada Inc. We believe that the information contained herein is current as of the date of this Safety Data Sheet. Since the use of this information and the conditions of use are not within the control of Praxair Canada Inc, it is the user's obligation to determine the conditions of safe use of the product. Praxair Canada Inc, SDSs are furnished on sale or delivery by Praxair Canada Inc, or the independent distributors and suppliers who package and sell our products. To obtain current SDSs for these products, contact your Praxair sales representative, local distributor, or supplier, or download from www.praxair.ca. If you have questions regarding Praxair SDSs, would like the document number and date of the latest SDS, or would like the names of the Praxair suppliers in your area, phone or write Praxair Canada Inc, (Phone: 1-888-257-5149; Address: Praxair Canada Inc, 1 City Centre Drive, Suite 1200, Mississauga, Ontario, L5B 1M2). PRAXAIR and the Flowing Airstream design are trademarks or registered trademarks of Praxair Technology, Inc. in the United States and/or other countries.
NFPA health hazard	: 4 - Very short exposure could cause death or serious residual injury even though prompt medical attention was given.
NFPA fire hazard	: 4 - Will rapidly or completely vaporize at normal pressure and temperature, or is readily dispersed in air and will burn readily.
NFPA reactivity	: 0 - Normally stable, even under fire exposure conditions, and are not reactive with water.

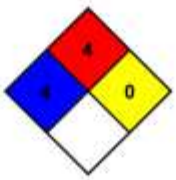

HMIS III Rating	
Health	: 2 Moderate Hazard - Temporary or minor injury may occur
Flammability	: 4 Severe Hazard - Flammable gases, or very volatile flammable liquids with flash points below 73 F, and boiling points below 100 F. Materials may ignite spontaneously with air. (Class IA)
Physical	: 2 Moderate Hazard - Materials that are unstable and may undergo violent chemical changes at normal temperature and pressure with low risk for explosion. Materials may react violently with water or form peroxides upon exposure to air.

SDS Canada (GHS) - Praxair

This information is based on our current knowledge and is intended to describe the product for the purposes of health, safety and environmental requirements only. It should not therefore be construed as guaranteeing any specific property of the product.

This document is only controlled while on the Praxair Canada Inc. website and a copy of this controlled version is available for download. Praxair cannot assure the integrity or accuracy of any version of this document after it has been downloaded or removed from our website.

Appendix B
SO_2 SDS

MATHESON
ask. . .The Gas Professionals™

Safety Data Sheet

Material Name: SULFUR DIOXIDE **SDS ID: MAT22290**

Section 1 - PRODUCT AND COMPANY IDENTIFICATION

Material Name
SULFUR DIOXIDE
Synonyms
MTG MSDS 80; SULFUROUS ACID ANHYDRIDE; SULFUROUS OXIDE; SULPHUR DIOXIDE; SULFUROUS ANHYDRIDE; FERMENTICIDE LIQUID; SULFUR DIOXIDE(SO2); SULFUR OXIDE; SULFUR OXIDE(SO2)
Chemical Family
inorganic, gas
Product Description
Classification determined in accordance with Compressed Gas Association standards.
Product Use
Industrial and Specialty Gas Applications.
Restrictions on Use
None known.
Details of the supplier of the safety data sheet
MATHESON TRI-GAS, INC.
3 Mountainview Road
Warren, NJ 07059
General Information: 1-800-416-2505
Emergency #: 1-800-424-9300 (CHEMTREC)
Outside the US: 703-527-3887 (Call collect)

Section 2 - HAZARDS IDENTIFICATION

Classification in accordance with paragraph (d) of 29 CFR 1910.1200.
Gases Under Pressure - Liquefied gas
Acute Toxicity - Inhalation - Gas - Category 3
Skin Corrosion/Irritation - Category 1B
Serious Eye Damage/Eye Irritation - Category 1
Simple Asphyxiant
GHS Label Elements
Symbol(s)

Signal Word
Danger
Hazard Statement(s)
Contains gas under pressure; may explode if heated.
Toxic if inhaled.
Causes severe skin burns and eye damage.
May displace oxygen and cause rapid suffocation.
Precautionary Statement(s)
Prevention
Use only outdoors or in a well-ventilated area.
Wear protective gloves/protective clothing/eye protection/face protection.

MATHESON
ask. . .The Gas Professionals™

Safety Data Sheet

Wash thoroughly after handling.
Do not breathe dusts or mists.

Response

IF INHALED: Remove person to fresh air and keep comfortable for breathing.
IF IN EYES: Rinse cautiously with water for several minutes. Remove contact lenses, if present and easy to do. Continue rinsing.
IF ON SKIN (or hair): Remove/take off immediately all contaminated clothing. Rinse skin with water/shower. Wash contaminated clothing before reuse.
IF SWALLOWED: Rinse mouth. Do NOT induce vomiting.
Immediately call a POISON CENTER or doctor.
Specific treatment (see label).

Storage

Store in a well-ventilated place. Keep container tightly closed.
Store locked up.
Protect from sunlight.

Disposal

Dispose of contents/container in accordance with local/regional/national/international regulations.

Other Hazards

Contact with liquified gas may cause frostbite.

Section 3 - COMPOSITION / INFORMATION ON INGREDIENTS

CAS	Component Name	Percent
7446-09-5	Sulfur dioxide	100.0

Section 4 - FIRST AID MEASURES

Inhalation

IF INHALED: Remove person to fresh air and keep at rest in a position comfortable for breathing. Get immediate medical attention.

Skin

IF ON SKIN (or hair): Remove/take off immediately all contaminated clothing. Rinse skin with water/shower. Wash contaminated clothing before reuse. If frostbite or freezing occur, immediately flush with plenty of lukewarm water (105-115°F; 41-46°C). If warm water is not available, gently wrap affected parts in blankets. DO NOT induce vomiting. Get immediate medical attention.

Eyes

IF IN EYES: Rinse cautiously with water for several minutes. Remove contact lenses, if present and easy to do. Continue rinsing. Get immediate medical attention.

Ingestion

IF SWALLOWED: Rinse mouth. Do NOT induce vomiting. Get immediate medical attention.

Most Important Symptoms/Effects

Acute

Toxic if inhaled, frostbite, suffocation, respiratory tract burns, skin burns, eye burns

Delayed

No information on significant adverse effects.

Indication of any immediate medical attention and special treatment needed

Treat symptomatically and supportively.

Note to Physicians

For inhalation, consider oxygen.

MATHESON
ask. . .The Gas Professionals™

Safety Data Sheet

Material Name: SULFUR DIOXIDE **SDS ID: MAT22290**

Section 5 - FIRE FIGHTING MEASURES

Extinguishing Media
Suitable Extinguishing Media
carbon dioxide, regular dry chemical, Large fires: Use regular foam or flood with fine water spray.
Unsuitable Extinguishing Media
None known.
Special Hazards Arising from the Chemical
Negligible fire hazard.
Hazardous Combustion Products
sulfur oxides
Fire Fighting Measures
Move container from fire area if it can be done without risk. Cool containers with water spray until well after the fire is out. Stay away from the ends of tanks. Keep unnecessary people away, isolate hazard area and deny entry.
Special Protective Equipment and Precautions for Firefighters
Wear full protective fire fighting gear including self contained breathing apparatus (SCBA) for protection against possible exposure.

Section 6 - ACCIDENTAL RELEASE MEASURES

Personal Precautions, Protective Equipment and Emergency Procedures
Wear personal protective clothing and equipment, see Section 8.
Methods and Materials for Containment and Cleaning Up
Keep unnecessary people away, isolate hazard area and deny entry. Stay upwind and keep out of low areas. Ventilate closed spaces before entering. Evacuation radius: 150 feet. Stop leak if possible without personal risk. Reduce vapors with water spray. Do not get water directly on material.
Environmental Precautions
Avoid release to the environment.

Section 7 - HANDLING AND STORAGE

Precautions for Safe Handling
Do not get in eyes, on skin, or on clothing. Do not breathe gas, fumes, vapor, or spray. Wash hands thoroughly after handling. Use only outdoors or in a well-ventilated area. Wear protective gloves/protective clothing/eye protection/face protection. Contaminated work clothing should not be allowed out of the workplace. Do not eat, drink or smoke when using this product. Keep only in original container. Avoid release to the environment.
Conditions for Safe Storage, Including any Incompatibilities
Store in a well-ventilated place. Keep container tightly closed.
Store locked up.
Protect from sunlight.
Store and handle in accordance with all current regulations and standards. Protect from physical damage. Store outside or in a detached building. Keep separated from incompatible substances.
Incompatible Materials
bases, combustible materials, halogens, metal carbide, metal oxides, metals, oxidizing materials, peroxides, reducing agents

Section 8 - EXPOSURE CONTROLS / PERSONAL PROTECTION

Component Exposure Limits

Sulfur dioxide	**7446-09-5**
ACGIH:	0.25 ppm STEL

MATHESON
ask. . .The Gas Professionals™

Safety Data Sheet

Material Name: SULFUR DIOXIDE **SDS ID: MAT22290**

NIOSH:	2 ppm TWA ; 5 mg/m3 TWA
	5 ppm STEL ; 13 mg/m3 STEL
	100 ppm IDLH
OSHA (US):	5 ppm TWA ; 13 mg/m3 TWA
Mexico:	0.25 ppm STEL [PPT-CT]

ACGIH - Threshold Limit Values - Biological Exposure Indices (BEI)
There are no biological limit values for any of this product's components.
Engineering Controls
Provide local exhaust or process enclosure ventilation system. Ensure compliance with applicable exposure limits.
Individual Protection Measures, such as Personal Protective Equipment
Eye/face protection
Wear splash resistant safety goggles with a faceshield. Contact lenses should not be worn. Provide an emergency eye wash fountain and quick drench shower in the immediate work area.
Skin Protection
Wear appropriate chemical resistant clothing. Wear chemical resistant clothing to prevent skin contact.
Respiratory Protection
Any self-contained breathing apparatus that has a full facepiece and is operated in a pressure-demand or other positive-pressure mode.
Glove Recommendations
Wear appropriate chemical resistant gloves.

Section 9 - PHYSICAL AND CHEMICAL PROPERTIES

Appearance	colorless gas	**Physical State**	gas
Odor	irritating odor	**Color**	colorless
Odor Threshold	3 - 5 ppm	**pH**	(Acidic in solution)
Melting Point	-73 °C (-99 °F)	**Boiling Point**	-10 °C (14 °F)
Boiling Point Range	Not available	**Freezing point**	Not available
Evaporation Rate	>1 (Butyl acetate = 1)	**Flammability (solid, gas)**	Not available
Autoignition Temperature	Not available	**Flash Point**	(Not flammable)
Lower Explosive Limit	Not available	**Decomposition temperature**	Not available
Upper Explosive Limit	Not available	**Vapor Pressure**	2432 mmHg @ 20 °C
Vapor Density (air=1)	2.26	**Specific Gravity (water=1)**	1.462 at -10 °C

MATHESON
ask. . .The Gas Professionals™

Safety Data Sheet

Material Name: SULFUR DIOXIDE **SDS ID: MAT22290**

Water Solubility	22.8 % (@ 0 °C)	**Partition coefficient: n-octanol/water**	Not available
Viscosity	Not available	**Kinematic viscosity**	Not available
Solubility (Other)	Not available	**Density**	Not available
Physical Form	liquified gas	**Molecular Formula**	S-O2
Molecular Weight	64.06		

Solvent Solubility
Soluble
alcohol, acetic acid, sulfuric acid, ether, chloroform, Benzene, sulfuryl chloride, nitrobenzenes, Toluene, acetone

Section 10 - STABILITY AND REACTIVITY

Reactivity
No reactivity hazard is expected.
Chemical Stability
Stable at normal temperatures and pressure.
Possibility of Hazardous Reactions
Will not polymerize.
Conditions to Avoid
Minimize contact with material. Containers may rupture or explode if exposed to heat.
Incompatible Materials
bases, combustible materials, halogens, metal carbide, metal oxides, metals, oxidizing materials, peroxides, reducing agents
Hazardous decomposition products
oxides of sulfur

Section 11 - TOXICOLOGICAL INFORMATION

Information on Likely Routes of Exposure
Inhalation
Toxic if inhaled. Causes damage to respiratory system, burns, difficulty breathing
Skin Contact
skin burns
Eye Contact
eye burns
Ingestion
burns, nausea, vomiting, diarrhea, stomach pain
Acute and Chronic Toxicity
Component Analysis - LD50/LC50
The components of this material have been reviewed in various sources and the following selected endpoints are published:
Sulfur dioxide (7446-09-5)
Inhalation LC50 Rat 965 - 1168 ppm 4 h
Product Toxicity Data
Acute Toxicity Estimate
No data available.
Immediate Effects

MATHESON
ask. . .The Gas Professionals™

Safety Data Sheet

Material Name: SULFUR DIOXIDE **SDS ID: MAT22290**

Toxic if inhaled, frostbite, suffocation, respiratory tract burns, skin burns, eye burns

Delayed Effects
No information on significant adverse effects.

Irritation/Corrosivity Data
respiratory tract burns, skin burns, eye burns

Respiratory Sensitization
No data available.

Dermal Sensitization
No data available.

Component Carcinogenicity

Sulfur dioxide	**7446-09-5**
ACGIH:	A4 - Not Classifiable as a Human Carcinogen
IARC:	Monograph 54 [1992] (Group 3 (not classifiable))

Germ Cell Mutagenicity
No data available.

Tumorigenic Data
No data available

Reproductive Toxicity
No data available.

Specific Target Organ Toxicity - Single Exposure
No target organs identified.

Specific Target Organ Toxicity - Repeated Exposure
No target organs identified.

Aspiration hazard
Not applicable.

Medical Conditions Aggravated by Exposure
respiratory disorders

Section 12 - ECOLOGICAL INFORMATION

Component Analysis - Aquatic Toxicity
No LOLI ecotoxicity data are available for this product's components.

Persistence and Degradability
No data available.

Bioaccumulative Potential
No data available.

Mobility
No data available.

Section 13 - DISPOSAL CONSIDERATIONS

Disposal Methods
Dispose of contents/container in accordance with local/regional/national/international regulations.

Component Waste Numbers
The U.S. EPA has not published waste numbers for this product's components.

Section 14 - TRANSPORT INFORMATION

US DOT Information:
Shipping Name: SULFUR DIOXIDE

MATHESON
ask. . .The Gas Professionals™

Safety Data Sheet

Material Name: SULFUR DIOXIDE **SDS ID: MAT22290**

Hazard Class: 2.3
UN/NA #: UN1079
Required Label(s): 2.3

IMDG Information:
Shipping Name: SULPHUR DIOXIDE
Hazard Class: 2.3
UN#: UN1079
Required Label(s): 2.3

TDG Information:
Shipping Name: SULFUR DIOXIDE
Hazard Class: 2.3
UN#: UN1079
Required Label(s): 2.3
International Bulk Chemical Code
This material does not contain any chemicals required by the IBC Code to be identified as dangerous chemicals in bulk.

Section 15 - REGULATORY INFORMATION

U.S. Federal Regulations
This material contains one or more of the following chemicals required to be identified under SARA Section 302 (40 CFR 355 Appendix A), SARA Section 313 (40 CFR 372.65), CERCLA (40 CFR 302.4), TSCA 12(b), and/or require an OSHA process safety plan.

Sulfur dioxide	**7446-09-5**
SARA 302:	500 lb TPQ
OSHA (safety):	1000 lb TQ (Liquid)
SARA 304:	500 lb EPCRA RQ

SARA Section 311/312 (40 CFR 370 Subparts B and C) reporting categories
Gas Under Pressure; Acute toxicity; Skin Corrosion/Irritation; Serious Eye Damage/Eye Irritation; Simple Asphyxiant
U.S. State Regulations
The following components appear on one or more of the following state hazardous substances lists:

Component	CAS	CA	MA	MN	NJ	PA
Sulfur dioxide	**7446-09-5**	Yes	Yes	Yes	Yes	Yes

California Safe Drinking Water and Toxic Enforcement Act (Proposition 65)

WARNING

This product can expose you to chemicals including Sulfur dioxide , which is known to the State of California to cause birth defects or other reproductive harm. For more information go to www.P65Warnings.ca.gov.

MATHESON
ask. . .The Gas Professionals™

Safety Data Sheet

Material Name: SULFUR DIOXIDE **SDS ID: MAT22290**

Sulfur dioxide	**7446-09-5**
Repro/Dev. Tox	developmental toxicity , 7/29/2011

Component Analysis - Inventory
Sulfur dioxide (7446-09-5)

US	CA	AU	CN	EU	JP - ENCS	JP - ISHL	KR KECI - Annex 1	KR KECI - Annex 2
Yes	DSL	Yes	Yes	EIN	Yes	Yes	Yes	No

KR - REACH CCA	MX	NZ	PH	TH-TECI	TW, CN	VN (Draft)
No	Yes	Yes	Yes	Yes	Yes	Yes

Section 16 - OTHER INFORMATION

NFPA Ratings
Health: 3 Fire: 0 Instability: 0
Hazard Scale: 0 = Minimal 1 = Slight 2 = Moderate 3 = Serious 4 = Severe
Summary of Changes
SDS update: 02/10/2016
Key / Legend
ACGIH - American Conference of Governmental Industrial Hygienists; ADR - European Road Transport; AU - Australia; BOD - Biochemical Oxygen Demand; C - Celsius; CA - Canada; CA/MA/MN/NJ/PA - California/Massachusetts/Minnesota/New Jersey/Pennsylvania*; CAS - Chemical Abstracts Service; CERCLA - Comprehensive Environmental Response, Compensation, and Liability Act; CFR - Code of Federal Regulations (US); CLP - Classification, Labelling, and Packaging; CN - China; CPR - Controlled Products Regulations; DFG - Deutsche Forschungsgemeinschaft; DOT - Department of Transportation; DSD - Dangerous Substance Directive; DSL - Domestic Substances List; EC – European Commission; EEC - European Economic Community; EIN - European Inventory of (Existing Commercial Chemical Substances); EINECS - European Inventory of Existing Commercial Chemical Substances; ENCS - Japan Existing and New Chemical Substance Inventory; EPA - Environmental Protection Agency; EU - European Union; F - Fahrenheit; F - Background (for Venezuela Biological Exposure Indices); IARC - International Agency for Research on Cancer; IATA - International Air Transport Association; ICAO - International Civil Aviation Organization; IDL - Ingredient Disclosure List; IDLH - Immediately Dangerous to Life and Health; IMDG - International Maritime Dangerous Goods; ISHL - Japan Industrial Safety and Health Law; IUCLID - International Uniform Chemical Information Database; JP - Japan; Kow - Octanol/water partition coefficient; KR KECI Annex 1 - Korea Existing Chemicals Inventory (KECI) / Korea Existing Chemicals List (KECL); KR KECI Annex 2 - Korea Existing Chemicals Inventory (KECI) / Korea Existing Chemicals List (KECL) , KR - Korea; LD50/LC50 - Lethal Dose/ Lethal Concentration; KR REACH CCA - Korea Registration and Evaluation of Chemical Substances Chemical Control Act; LEL - Lower Explosive Limit; LLV - Level Limit Value; LOLI - List Of LIsts™ - ChemADVISOR's Regulatory Database; MAK - Maximum Concentration Value in the Workplace; MEL - Maximum Exposure Limits; MX – Mexico; Ne- Non-specific; NFPA - National Fire Protection Agency; NIOSH - National Institute for Occupational Safety and Health; NJTSR - New Jersey Trade Secret Registry; Nq - Non-quantitative; NSL – Non-Domestic Substance List (Canada); NTP - National Toxicology Program; NZ - New Zealand; OSHA - Occupational Safety and Health Administration; PEL- Permissible Exposure Limit; PH - Philippines; RCRA - Resource Conservation and Recovery Act; REACH- Registration, Evaluation, Authorisation, and restriction of Chemicals; RID - European Rail Transport; SARA - Superfund Amendments and Reauthorization Act; Sc - Semi-quantitative; STEL - Short-term Exposure Limit;

Operator Name: PERMIAN RESOURCES OPERATING LLC

Well Name: LOS VAQUEROS FEDERAL **Well Number:** 111H

Disposal location description: A LICENSED 3rd PARTY CONTRACTOR WILL BE UTILIZED TO HAUL AND DISPOSE OF GARBAGE

Reserve Pit

Reserve Pit being used? NO

Temporary disposal of produced water into reserve pit? NO

Reserve pit length (ft.) **Reserve pit width (ft.)**

Reserve pit depth (ft.) **Reserve pit volume (cu. yd.)**

Is at least 50% of the reserve pit in cut?

Reserve pit liner

Reserve pit liner specifications and installation description

Cuttings Area

Cuttings Area being used? NO

Are you storing cuttings on location? N

Description of cuttings location

Cuttings area length (ft.) **Cuttings area width (ft.)**

Cuttings area depth (ft.) **Cuttings area volume (cu. yd.)**

Is at least 50% of the cuttings area in cut?

WCuttings area liner

Cuttings area liner specifications and installation description

Section 8 - Ancillary

Are you requesting any Ancillary Facilities?: N

Ancillary Facilities

Comments:

Section 9 - Well Site

Well Site Layout Diagram:

Los_Vaqueros_Fed_111H_RL_20240724145656.pdf

Los_Vaqueros_Pad_2_Site_Plan_20240725163413.pdf

Comments: Rig Plat Diagrams: There are two (2) existing multi-well pads with extensions being utilized for the Los Vaqueros Federal Com project. The proposed and existing pads will allow enough space for cuts and

Sante Fe Main Office
Phone: (505) 476-3441

General Information
Phone: (505) 629-6116

Online Phone Directory
https://www.emnrd.nm.gov/ocd/contact-us

State of New Mexico
Energy, Minerals and Natural Resources
Oil Conservation Division
1220 S. St Francis Dr.
Santa Fe, NM 87505

CONDITIONS

Action 438519

CONDITIONS

Operator: Permian Resources Operating, LLC 300 N. Marienfeld St Ste 1000 Midland, TX 79701	OGRID: 372165
	Action Number: 438519
	Action Type: [C-101] BLM - Federal/Indian Land Lease (Form 3160-3)

CONDITIONS

Created By	Condition	Condition Date
clevans	Cement is required to circulate on both surface and intermediate1 strings of casing.	3/4/2025
clevans	If cement does not circulate on any string, a Cement Bond Log (CBL) is required for that string of casing.	3/4/2025
pkautz	File As Drilled C-102 and a directional Survey with C-104 completion packet.	3/8/2025
pkautz	Once the well is spud, to prevent ground water contamination through whole or partial conduits from the surface, the operator shall drill without interruption through the fresh water zone or zones and shall immediately set in cement the water protection string.	3/8/2025
pkautz	Oil base muds are not to be used until fresh water zones are cased and cemented providing isolation from the oil or diesel. This includes synthetic oils. Oil based mud, drilling fluids and solids must be contained in a steel closed loop system.	3/8/2025