Sante Fe Main Office
Phone: (505) 476-3441

General Information
Phone: (505) 629-6116

Online Phone Directory
https://www.emnrd.nm.gov/ocd/contact-us

State of New Mexico
Energy, Minerals and Natural Resources
Oil Conservation Division
1220 S. St Francis Dr.
Santa Fe, NM 87505

Form C-101
August 1, 2011

Permit 427660

APPLICATION FOR PERMIT TO DRILL, RE-ENTER, DEEPEN, PLUGBACK, OR ADD A ZONE

1. Operator Name and Address	2. OGRID Number
EOG RESOURCES INC 5509 Champions Drive Midland, TX 79706	7377
	3. API Number 30-025-57108

4. Property Code	5. Property Name	6. Well No.
316008	BRASWELL 16 STATE	741H

7. Surface Location

UL - Lot	Section	Township	Range	Lot Idn	Feet From	N/S Line	Feet From	E/W Line	County
C	16	26S	33E	C	234	N	1559	W	Lea

8. Proposed Bottom Hole Location

UL - Lot	Section	Township	Range	Lot Idn	Feet From	N/S Line	Feet From	E/W Line	County
D	16	26S	33E	D	100	N	330	W	Lea

9. Pool Information

SANDERS TANK;UPPER WOLFCAMP	98097

Additional Well Information

11. Work Type	12. Well Type	13. Cable/Rotary	14. Lease Type	15. Ground Level Elevation
New Well	OIL		State	3277
16. Multiple	17. Proposed Depth	18. Formation	19. Contractor	20. Spud Date
N	23361	Wolfcamp		11/6/2026
Depth to Ground water		Distance from nearest fresh water well		Distance to nearest surface water

☐ **We will be using a closed-loop system in lieu of lined pits**

21. Proposed Casing and Cement Program

Type	Hole Size	Casing Size	Casing Weight/ft	Setting Depth	Sacks of Cement	Estimated TOC
Surf	12.25	10.75	40.5	963	260	0
Int1	9.875	8.625	32	12158	870	0
Prod	7.875	6	22.3	12208	1220	0
Prod	6.75	5.5	20	23604	1220	0

Casing/Cement Program: Additional Comments

22. Proposed Blowout Prevention Program

Type	Working Pressure	Test Pressure	Manufacturer
Double Ram	5000	3000	

23. I hereby certify that the information given above is true and complete to the best of my knowledge and belief.
I hereby certify that no additives containing PFAS chemicals will be added to the completion or recompletion of this well.
I further certify I have complied with 19.15.14.9 (A) NMAC ☐ and/or 19.15.14.9 (B) NMAC ☐, if applicable.

Signature:

OIL CONSERVATION DIVISION

Printed Name:	Electronically filed by Kristina Agee	Approved By:	Jeffrey Harrison	
Title:	Senior Regulatory Administrator	Title:	Petroleum Specialist III	
Email Address:	Kristina_agee@eogresources.com	Approved Date:	11/12/2026	Expiration Date: 11/12/2028
Date:	10/22/2026 Phone: 432-686-6996	Conditions of Approval Attached		

C-102	State of New Mexico Energy, Minerals & Natural Resources Department OIL CONSERVATION DIVISION	Revised July 9, 2024
Submit Electronically Via OCD Permitting		Submittal Type: ☒ Initial Submittal ☐ Amended Report ☐ As Drilled

WELL LOCATION AND ACREAGE DEDICATION PLAT

API Number	Pool Code	Pool Name
30-025- 57108	98097	SANDERS TANK;UPPER WOLFCAMP

Property Code	Property Name	Well Number
316008	BRASWELL 16 STATE	741H

OGRID No.	Operator Name	Ground Level Elevation
7377	EOG RESOURCES, INC.	3277'

Surface Owner: ☒ State ☐ Fee ☐ Tribal ☐ Federal

Mineral Owner: ☒ State ☐ Fee ☐ Tribal ☐ Federal

Surface Location

UL or lot no.	Section	Township	Range	Lot Idn	Feet from the N/S	Feet from the E/W	Latitude	Longitude	County
C	16	26-S	33-E	-	234' N	1559' W	N 32.0501275	W 103.5807338	LEA

Bottom Hole Location

UL or lot no.	Section	Township	Range	Lot Idn	Feet from the N/S	Feet from the E/W	Latitude	Longitude	County
D	16	26-S	33-E	-	100' N	330' W	N 32.0505054	W 103.5847023	LEA

Dedicated Acres	Infill or Defining Well	Defining Well API	Overlapping Spacing Unit (Y/N)	Consolidated Code
320.00	INFILL	BRASWELL 16 STATE #721H U; API PENDING	Y: EOG	N/A

Order Numbers: N/A

Well Setbacks are under Common Ownership: ☐ Yes ☐ No

Kick Off Point (KOP)

UL or lot no.	Section	Township	Range	Lot Idn	Feet from the N/S	Feet from the E/W	Latitude	Longitude	County
C	16	26-S	33-E	-	50' N	1650' W	N 32.0506324	W 103.5804421	LEA

First Take Point (FTP)

UL or lot no.	Section	Township	Range	Lot Idn	Feet from the N/S	Feet from the E/W	Latitude	Longitude	County
C	16	26-S	33-E	-	100' N	1650' W	N 32.0504949	W 103.5804419	LEA

Last Take Point (LTP)

UL or lot no.	Section	Township	Range	Lot Idn	Feet from the N/S	Feet from the E/W	Latitude	Longitude	County
D	16	26-S	33-E	-	100' N	330' W	N 32.0505054	W 103.5847023	LEA

Unitized Area or Area of Uniform Interest	Spacing Unit Type	Ground Floor Elevation
LEASE WELL	☒ Horizontal ☐ Vertical	3302'

OPERATOR CERTIFICATION

I hereby certify that the information contained herein is true and complete to the best of my knowledge and belief; and, if the well is a vertical or directional well, that this organization either owns a working interest or unleased mineral interest in the land including the proposed bottom hole location or has a right to drill this well at this location pursuant to a contract with an owner of a working interest or unleased mineral interest, or to a voluntary pooling agreement or a compulsory pooling order heretofore entered by the division.

If this well is a horizontal well, I further certify that this organization has received The consent of at least one lessee or owner of a working interest or unleased mineral interest in each tract (in the target pool or formation) in which any part of the well's completed interval will be located or obtained a compulsory pooling order from the division.

Kayla McConnell — 10/22/2026

Signature — Date

Kayla McConnell

Print Name

Kayla _McConnell@eogresources.com

E-mail Address

SURVEYORS CERTIFICATION

I hereby certify that the well location shown on this plat was plotted from field notes of actual surveys made by me or under my supervision, and that the same is true and correct to the best of my belief.

RAMON DOMINGUEZ NEW MEXICO 24508 PROFESSIONAL SURVEYOR

10/14/2026 4:35:28 PM

Signature and Seal of Professional Surveyor — Date

Certificate Number

Date of Survey: 09/22/2026

S:\SURVEY\EOG_MIDLAND\BRASWELL_16_STATE\FINAL_PRODUCTS\LO_BRASWELL_16_STATE_741H_C102.dwg CALEB.BOTTEN 10/14/2026 4:35 PM

C-102	State of New Mexico Energy, Minerals & Natural Resources Department OIL CONSERVATION DIVISION	Revised July 9, 2024
Submit Electronically Via OCD Permitting		Submittal Type: ☒ Initial Submittal ☐ Amended Report ☐ As Drilled

Property Name and Well Number

BRASWELL 16 STATE 741H

SURFACE LOCATION (SHL)
NEW MEXICO EAST
NAD 1983
X=774510 Y=382787
LAT.: N 32.0501275
LONG.: W 103.5807338
NAD 1927
X=733323 Y=382730
LAT.: N 32.0500019
LONG.: W 103.5802653
234' FNL 1559' FWL

KICK OFF POINT (KOP)
NEW MEXICO EAST
NAD 1983
X=774599 Y=382971
LAT.: N 32.0506324
LONG.: W 103.5804421
NAD 1927
X=733412 Y=382914
LAT.: N 32.0505068
LONG.: W 103.5799736
50' FNL 1650' FWL

FIRST TAKE POINT (FTP)
NEW MEXICO EAST
NAD 1983
X=774600 Y=382921
LAT.: N 32.0504949
LONG.: W 103.5804419
NAD 1927
X=733413 Y=382864
LAT.: N 32.0503694
LONG.: W 103.5799735
100' FNL 1650' FWL

POINT OF CURVATURE (PC1)
NEW MEXICO EAST
NAD 1983
X=774635 Y=378321
LAT.: N 32.0378496
LONG.: W 103.5804313
NAD 1927
X=733448 Y=378264
LAT.: N 32.0377239
LONG.: W 103.5799634
579' FSL 1650' FWL

NON PERF. ZONE (NPZ1)
NEW MEXICO EAST
NAD 1983
X=774493 Y=377977
LAT.: N 32.0369070
LONG.: W 103.5808989
NAD 1927
X=733305 Y=377920
LAT.: N 32.0367812
LONG.: W 103.5804310
236' FSL 1505' FWL

POINT OF CURVATURE (PC2)
NEW MEXICO EAST
NAD 1983
X=774159 Y=377840
LAT.: N 32.0365361
LONG.: W 103.5819773
NAD 1927
X=732972 Y=377783
LAT.: N 32.0364104
LONG.: W 103.5815094
100' FSL 1171' FWL

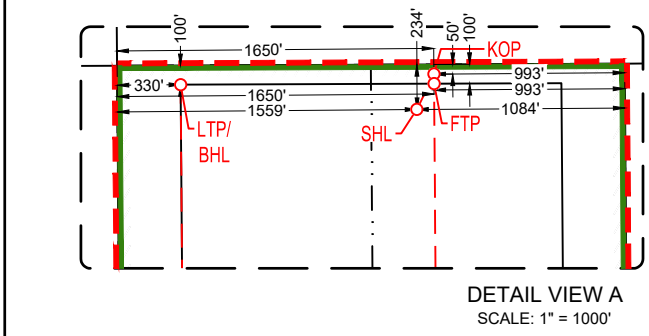

DETAIL VIEW A
SCALE: 1" = 1000'

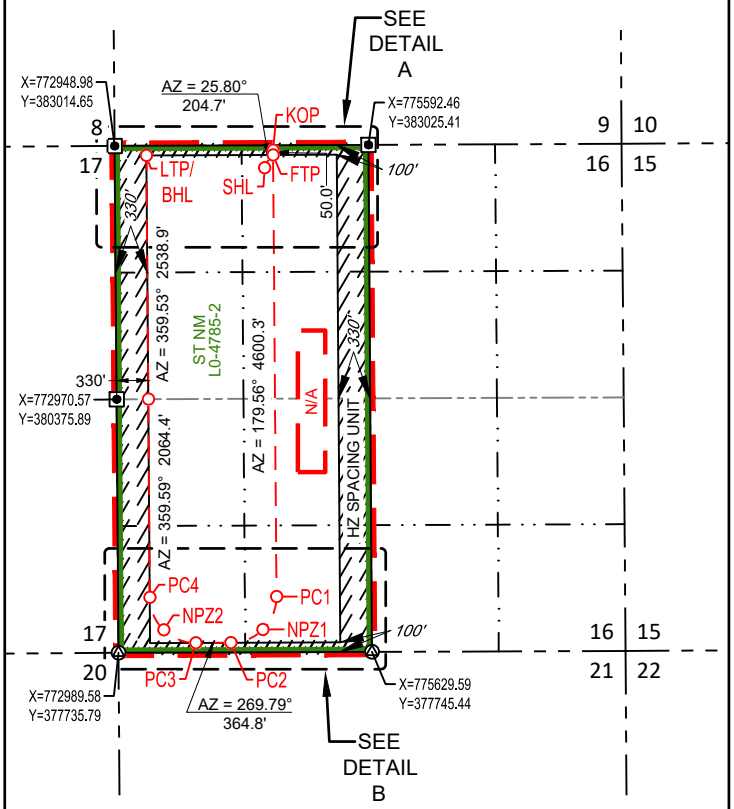

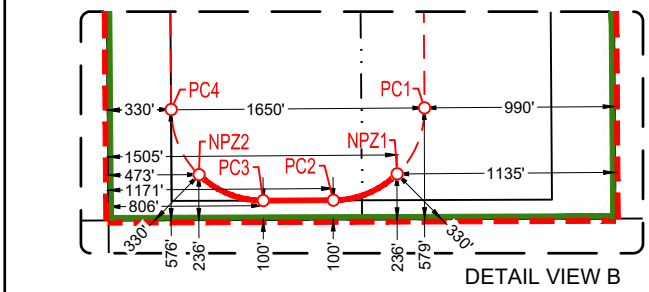

DETAIL VIEW B
SCALE: 1" = 1000'

POINT OF CURVATURE (PC3)
NEW MEXICO EAST
NAD 1983
X=773795 Y=377839
LAT.: N 32.0365394
LONG.: W 103.5831544
NAD 1927
X=732607 Y=377781
LAT.: N 32.0364137
LONG.: W 103.5826865
100' FSL 806' FWL

NON PERF. ZONE (NPZ2)
NEW MEXICO EAST
NAD 1983
X=773460 Y=377974
LAT.: N 32.0369163
LONG.: W 103.5842300
NAD 1927
X=732273 Y=377916
LAT.: N 32.0367906
LONG.: W 103.5837620
236' FSL 473' FWL

POINT OF CURVATURE (PC4)
NEW MEXICO EAST
NAD 1983
X=773315 Y=378313
LAT.: N 32.0378517
LONG.: W 103.5846903
NAD 1927
X=732128 Y=378255
LAT.: N 32.0377259
LONG.: W 103.5842222
576' FSL 330' FWL

LAST TAKE POINT (LTP)
BOTTOM HOLE LOCATION (BHL)
NEW MEXICO EAST
NAD 1983
X=773280 Y=382916
LAT.: N 32.0505054
LONG.: W 103.5847023
NAD 1927
X=732093 Y=382859
LAT.: N 32.0503798
LONG.: W 103.5842336
100' FNL 330' FWL

SURVEYORS CERTIFICATION

I hereby certify that the well location shown on this plat was plotted from field notes of actual surveys made by me or under my supervision, and that the same is true and correct to the best of my belief.

09/22/2026
Date of Survey

Signature and Seal of Professional Surveyor:

RAMON DOMINGUEZ
NEW MEXICO
24508
PROFESSIONAL SURVEYOR

0/14/2026 4:35:29 PM

S:\SURVEY\EOG_MIDLAND\BRASWELL_16_STATE\FINAL_PRODUCTS\0_BRASWELL_16_STATE_741H_C102.dwg CALEB.OTTEN 10/14/2026 4:35 PM

Sante Fe Main Office
Phone: (505) 476-3441

General Information
Phone: (505) 629-6116

Online Phone Directory
https://www.emnrd.nm.gov/ocd/contact-us

State of New Mexico
Energy, Minerals and Natural Resources
Oil Conservation Division
1220 S. St Francis Dr.
Santa Fe, NM 87505

Form APD Conditions

Permit 427660

PERMIT CONDITIONS OF APPROVAL

Operator Name and Address:	API Number:
EOG RESOURCES INC [7377] 5509 Champions Drive Midland, TX 79706	30-025-57108
	Well: BRASWELL 16 STATE #741H

OCD Reviewer	Condition
jeffrey.harrison	No additives containing PFAS chemicals will be added to the drilling fluids or completion fluids used during drilling, completions, or recompletions operations.
jeffrey.harrison	All logs run on the well must be submitted to NMOCD.
jeffrey.harrison	Surface casing shall be set a minimum of 70 ft into the Rustler Anhydrite, above the salt, and below useable fresh water and cemented to the surface. If salt is encountered, set casing at least 70 ft above the salt.
jeffrey.harrison	Cement must be in place for at least 8 hours AND achieve a minimum compressive strength of 500 psi before performing further operations on the well.
jeffrey.harrison	If a DV tool is used, once the DV tool is opened and circulation is established, it needs to be noted if cement is circulated off of the top of the DV tool and how much.
jeffrey.harrison	If cement is not circulated off of the top of the DV tool, then a CBL will be required. Depending upon the results of the CBL, remedial action may be required prior to drilling operations continuing.
jeffrey.harrison	File As Drilled C-102 and a directional Survey with C-104 completion packet.
jeffrey.harrison	Notify the OCD 24 hours prior to casing & cement.
jeffrey.harrison	A [C-103] Sub. Drilling (C-103N) is required within (10) days of spud.
jeffrey.harrison	Once the well is spud, to prevent ground water contamination through whole or partial conduits from the surface, the operator shall drill without interruption through the fresh water zone or zones and shall immediately set in cement the water protection string.
jeffrey.harrison	Oil base muds are not to be used until fresh water zones are cased and cemented providing isolation from the oil or diesel. This includes synthetic oils. Oil based mud, drilling fluids and solids must be contained in a steel closed loop system.
jeffrey.harrison	Cement is required to circulate on both surface and intermediate1 strings of casing.
jeffrey.harrison	If the method of isolation was not by circulation, a CBL must be performed; if strata isolation is not achieved, then remediation will be required before further operations.
jeffrey.harrison	This well has been placed within the following upper Wolfcamp pool: SANDERS TANK;UPPER WOLFCAMP [98097]. If this well is intended to product from any part of the Wolfcamp formation deeper then the Wolfcamp A bench, a sundry to correctly assign the pool will be required before production and a downhole comingling order may be required depending on circumstances.

eog resources

EOG Batch Casing

Pad Name: Braswell 16 State Deep

SHL: Section 16, Township 26-S, Range 33-E, LEA County, NM

Well Name	API #	Surface		Salt String/DV Tool		Deep Intermediate		Production	
		MD	TVD	MD	TVD	MD	TVD	MD	TVD
Braswell 16 State #721H	30-025-*****	963	963	4,861	4,836	11,914	11,889	23,361	12,462
Braswell 16 State #741H	30-025-*****	963	963	4,839	4,836	12,158	12,155	23,604	12,728
Braswell 16 State #751H	30-025-*****	963	963	4,863	4,836	12,333	12,306	23,779	12,879
Braswell 16 State #761H	30-025-*****	963	963	4,956	4,836	12,581	12,467	24,027	13,040
Braswell 16 State #762H	30-025-*****	963	963	4,839	4,836	12,470	12,467	17,926	13,040

eog resources

Braswell 16 State 741H

1. GEOLOGIC NAME OF SURFACE FORMATION:
Permian

2. ESTIMATED TOPS OF IMPORTANT GEOLOGICAL MARKERS:

Rustler	851'
Tamarisk Anhydrite	938'
Top of Salt	1,212'
Base of Salt	4,685'
Lamar	4,911'
Bell Canyon	4,949'
Cherry Canyon	5,943'
Brushy Canyon	7,537'
Bone Spring Lime	9,015'
Leonard (Avalon) Shale	9,057'
1st Bone Spring Sand	9,933'
2nd Bone Spring Shale	10,175'
2nd Bone Spring Sand	10,480'
3rd Bone Spring Carb	10,931'
3rd Bone Spring Sand	11,594'
Wolfcamp	12,015'
TD	12,728'

3. ESTIMATED DEPTHS OF ANTICIPATED FRESH WATER, OIL OR GAS:

Upper Permian Sands	0- 400’ Fresh Water
Bell Canyon	4,949' Oil
Cherry Canyon	5,943' Oil
Brushy Canyon	7,537' Oil
Bone Spring Lime	9,015' Oil
Leonard (Avalon) Shale	9,057' Oil
1st Bone Spring Sand	9,933' Oil
2nd Bone Spring Shale	10,175' Oil
2nd Bone Spring Sand	10,480' Oil
3rd Bone Spring Carb	10,931' Oil
3rd Bone Spring Sand	11,594' Oil
Wolfcamp	12,015' Oil

No other formations are expected to give up oil, gas or fresh water in measurable quantities. Surface fresh water sands will be protected by setting 13-3/8" or 10-3/4" casing at 963' and circulating cement back to surface.

eog resources

Braswell 16 State 741H

Location: SHL: Section 16, T-26-S, R-33-E, LEA Co., N.M.
BHL: Section 16, T-26-S, R-33-E, LEA Co., N.M.

4a. CASING PROGRAM Primary APD Design A:

Hole Size	Interval MD From (ft)	Interval MD To (ft)	Interval TVD From (ft)	Interval TVD To (ft)	Csg OD	Weight	Grade	Conn
12-1/4"	0	963	0	963	10-3/4"	40.5#	J-55	STC
9-7/8"	0	12,158	0	12,155	8-5/8"	32#	P110-HSCY	GB CD Butt 9.03
7-7/8"	0	12,208	0	12,205	6"	22.3#	P110-EC	DWC/C IS
6-3/4"	12,208	23,604	12,205	12,728	5-1/2"	20#	P110-EC	DWC/C IS MS

**For highlighted rows above, variance is requested to run entire string of either 6" or 5-1/2" casing string above due to availability.

Variance is requested to waive the centralizer requirements for the 8-5/8" casing in the 9-7/8" hole size. An expansion additive will be utilized, in the cement slurry, for the entire length of the 9-7/8 hole interval to maximize cement bond and zonal isolation.

Variance is also requested to waive any centralizer requirements for the 6" and 5-1/2" casings in the 7-7/8" and 6-3/4" hole sizes. An expansion additive will be utilized, in the cement slurry, for the entire length of the 7-7/8" and 6-3/4" hole intervals to maximize cement bond and zonal isolation.

Variance is also requested to waive the annular clearance requirements for the 6" and 5-1/2" casings by 8-5/8" casing annulus to the proposed top of cement.

EOG requests permission to allow deviation from the 0.422'' annulus clearance requirement from Title 43 CFR Part 3170 under the following conditions:

- Annular clearance to meet or exceed 0.422'' between intermediate casing ID and production casing coupling only on the first 500' overlap between both casing strings.
- Annular clearance less than 0.422'' is acceptable for the production open hole section.

5a. CEMENTING PROGRAM:

Depth	No. Sacks	Wt. ppg	Yld Ft3/sk	Slurry Description
963' 10-3/4"	220	13.5	1.73	Lead: Class C/H + additives (TOC @ Surface)
	40	14.8	1.34	Tail: Class C/H + additives (TOC @ 770')
12,155' 8-5/8"	300	9.0	4.70	Lead: Class C/H + additives (TOC @ Surface)
	570	13.2	1.58	Tail: Class C/H + additives (TOC @ 7,437')
23,604' 6" 5-1/2"	430	9.0	4.71	Lead: Class C/H + additives (TOC @ Surface)
	790	12.5	2.09	Tail: Class C/H + additives (TOC @ 11,155' TVD)

**If using Class C past 7500', the slurry will meet the regulatory requirments and specifications of Class H.

Braswell 16 State 741H

Additive	Purpose
Bentonite Gel	Lightweight/Lost circulation prevention
Calcium Chloride	Accelerator
Cello-flake	Lost circulation prevention
Sodium Metasilicate	Accelerator
MagOx	Expansive agent
Pre-Mag-M	Expansive agent
Sodium Chloride	Accelerator
FL-62	Fluid loss control
Halad-344	Fluid loss control
Halad-9	Fluid loss control
HR-601	Retarder
Microbond	Expansive Agent

Cement integrity tests will be performed immiediately following plug bump

If a beaded cement slurry is pumped, EOG intends to bring the beaded cement slurry to surface, and follow up with a bradenhead down to the Brushy. As a contigency, EOG requests variance from minimum standards to pump a two stage cement job on the 8-5/8" intermediate casing string with the tail stage being pumped conventionally with the calculated top of cement at the Brushy Canyon (7,537') and the second stage performed as a bradenhead squeeze with planned cement from the Brushy Canyon to surface. If necessary, a top out consisting of Class C/H cement + addtives (2.30 yld, 12.91 ppg) will be executed as a contingency. Top will be verified by CBL if primary job does not circulate to surface.

If a cement slurry of greater weight than the beaded slurry is pumped, EOG will attempt to bring the slurry to surface. In the event the cement does not circulate to surface, EOG requests the ability to bradenhead cement.

EOG also requests a variance to pump a bradenhead cement on the production cement job, in the event the primary job does not circulate to surface. If the primary cement job does not circulate to surface, a CBL will be ran to determine the TOC.

EOG will report to the BLM the volume of fluid (limited to 5 bbls) used to flush intermediate casing valves following backside cementing procedures.

EOG requests a variance to set the intermediate casing shoe in the Bone Spring formation OR the Wolfcamp formation, depending on depletion in the area and well conditions. EOG will monitor the well and ensure the well is static before casing operations begin.

6. MINIMUM SPECIFICATIONS FOR PRESSURE CONTROL:

Variance is requested to use a co-flex line between the BOP and choke manifold (instead of using a 4” OD steel line).

The minimum blowout preventer equipment (BOPE) shown in Exhibit #1 will consist of a single ram, mud cross and double ram-type (10,000 psi WP) preventer and an annular preventer (5,000 psi WP). Both units will be hydraulically operated and the ram-type will be equipped with blind rams on bottom and drill pipe rams on top.

Braswell 16 State 741H

EOG will utilize wing unions on BOPE connections that can be isolated from wellbore pressure through means of a choke. All wing unions will be rated to a pressure that meets or exceeds the pressure rating of the BOPE system.

Variance is requested to use a 5,000 psi annular BOP with the 10,000 psi BOP stack.

Pipe rams and blind rams will be operationally checked on each trip out of the hole. These checks will be noted on the daily tour sheets.

A hydraulically operated choke will be installed prior to drilling out of the intermediate casing shoe.

7. TYPES AND CHARACTERISTICS OF THE PROPOSED MUD SYSTEM:

During this procedure we plan to use a Closed-Loop System and haul contents to the required disposal.

The applicable depths and properties of the drilling fluid systems are as follows:

Depth	Type	Weight (ppg)	Viscosity	Water Loss
0 – 963'	Fresh - Gel	8.6-8.8	28-34	N/c
963' – 12,155'	Brine	9.8-10.8	28-34	N/c
12,155’ – 12,158'	Water - Gel	8.7-9.4	58-68	N/c - 6
12,158’ – 23,604’ Lateral	Oil Base	10.0-14.0	58-68	4 - 6

The highest mud weight needed to balance formation is expected to be 11.5 ppg. In order to maintain hole stability, mud weights up to 14.0 ppg may be utilized.

An electronic pit volume totalizer (PVT) will be utilized on the circulating system, to monitor pit volume, flow rate, pump pressure and stroke rate.

Sufficient mud materials to maintain mud properties and meet minimum lost circulation and weight increase requirements will be kept at the wellsite at all times.

8. AUXILIARY WELL CONTROL AND MONITORING EQUIPMENT:

(A) A kelly cock will be kept in the drill string at all times.

(B) A full opening drill pipe-stabbing valve (inside BOP) with proper drill pipe connections will be on the rig floor at all times.

(C) H2S monitoring and detection equipment will be utilized from surface casing point to TD.

9. LOGGING, TESTING AND CORING PROGRAM:

Open-hole logs are not planned for this well.

GR-CCL Will be run in cased hole during completions phase of operations.

10. ABNORMAL CONDITIONS, PRESSURES, TEMPERATURES AND POTENTIAL HAZARDS:

The estimated bottom-hole temperature (BHT) at TD is 197 degrees F with an estimated maximum bottom-hole pressure (BHP) at TD of 9,266 psig and a maximum anticipated surface pressure of 6,466 psig (based on 14.0 ppg MW). No hydrogen sulfide or other hazardous gases or fluids have been encountered, reported or are known to exist at this depth in this area. Severe loss circulation is expected from 7,537' to intermediate casing point.

11. ANTICIPATED STARTING DATE AND DURATION OF OPERATIONS:

The drilling operation should be finished in approximately one month. If the well isproductive, an additional 60-90 days will be required for completion and testing before a decision is made to install permanent facilities.

EOG Resources requests the option to contract a Surface Rig to drill, set surface casing, and Cement on the subject well. After WOC 8 hours or 500 psi compressive strength (whichever is greater), the Surface Rig will move off so the wellhead can be installed. A welder will cut the casing to the proper height and weld on the wellhead (both “A” and “B” sections). The weld will be tested to 1,500 psi. All valves will be closed and a wellhead cap will be installed (diagram attached). If the timing between rigs is such that EOG Resources would not be able to preset the surface, the Primary Rig will MIRU and drill the well in its entirety per the APD.

12. WELLHEAD:

A multi-bowl wellhead system will be utilized.

After running the surface casing, a BOP/BOPE system with a minimum working pressure of 10,000 psi will be installed on the wellhead system and will be pressure tested to 250 psi low followed by a 10,000 psi pressure test. This pressure test will be repeated at least every 30 days, as per Title 43 CFR Part 3170.

The minimum working pressure of the BOP and related BOPE required for drilling below the surface casing shoe shall be 10,000 psi.

The multi-bowl wellhead will be installed by vendor’s representative(s). A copy of the installation instructions for the Cactus Multi-Bowl WH system has been sent to the NM BLM office in Carlsbad, NM.

Braswell 16 State 741H

The wellhead will be installed by a third party welder while being monitored by WH vendor's representative.

All BOP equipment will be tested utilizing a conventional test plug. Not a cup or J-packer type. EOG Resources reserves the option to conduct BOPE testing during wait on cement periods provided a test plug is utilized.

A solid steel body pack-off will be utilized after running and cementing the intermediate casing. After installation the pack-off and lower flange will be pressure tested to 5,000 psi.

Casing strings will be tested as per Title 43 CFR Part 3170 to at least 0.22 psi/ft or 1,500 psi, whichever is greater.

eog resources

Braswell 16 State 741H

13. TUBING REQUIREMENTS

EOG respectively requests an exception to the following NMOCD rule:

- 19.15.16.10 Casing AND TUBING RQUIREMENTS:
  J (3): "The operator shall set tubing as near the bottom as practical and tubing perforations shall not be more than 250 feet above top of pay zone."

With horizontal flowing and gas lifted wells an end of tubing depth placed at or slightly above KOP is a conservative way to ensure the tubing stays clean from debris, plugging, and allows for fewer well interventions post offset completion. The deeper the tubulars are run into the curve, the higher the probability is that the tubing will become stuck in sand and or well debris as the well produces over time. An additional consideration for EOT placement during artificial lift installations is avoiding the high dog leg severity and inclinations found in the curve section of the wellbore to help improve reliability and performance. Dog leg severity and inclinations tend not to hamper gas lifted or flowing wells, but they do effect other forms of artificial lift like rod pump or ESP (electric submersible pump). Keeping the EOT above KOP is an industry best practice for those respective forms of artificial lift.

14. VARIANCE REQUESTS:

EOG requests the additional variance(s) in the attached document(s):

- EOG BLM Variance 2a - Intermediate Bradenhead Cement
- EOG BLM Variance 2b - Wolfcamp Intermediate Casing Setpoint
- EOG BLM Variance 3e - BOP Break-test and Offline Surface and Intermediate Cement
- EOG BLM Variance 3d - Production Offline Cement

eog resources

Braswell 16 State 741H
Proposed Wellbore
Primary APD Design A

234' FNL
1559' FWL
Section 16
T-26-S, R-33-E

API: 30-025-***

KB: 3302'
GL: 3277'

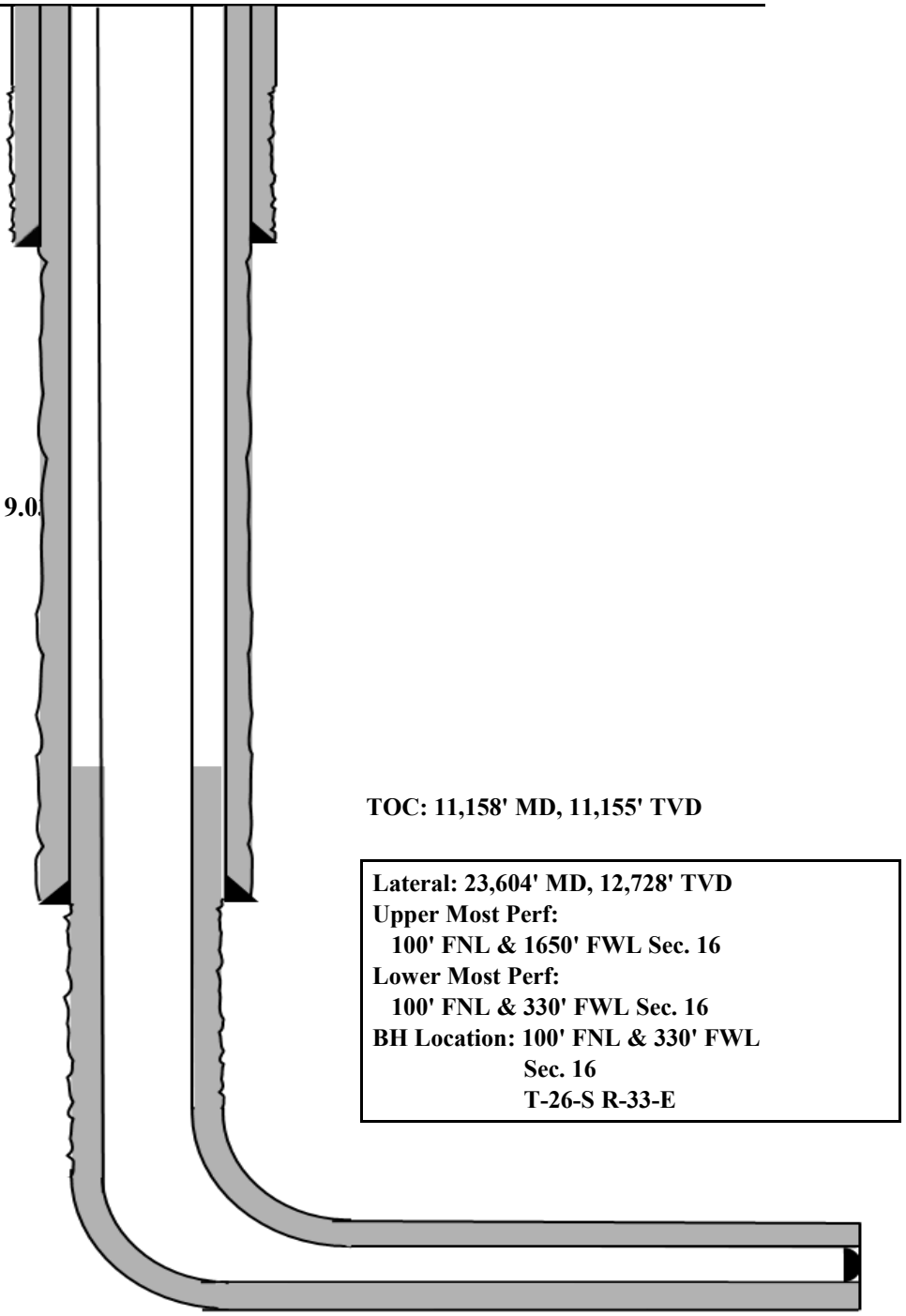

Bit Size: 12-1/4"
10-3/4", 40.5#, J-55, STC,
@ 0' - 963' MD
@ 0' - 963' TVD

Bit Size: 9-7/8"
8-5/8", 32#, P110-HSCY, GB CD Butt 9.0
@ 0' - 12,158' MD
@ 0' - 12,155' TVD

TOC: 11,158' MD, 11,155' TVD

Bit Size: 7-7/8"|6-3/4"
6", 22.3#, P110-EC, DWC/C IS
@ 0' - 12,208' MD
@ 0' - 12,205' TVD
5-1/2", 20.#, P110-EC, DWC/C IS MS
@ 12,208' - 23,604' MD
@ 12,205' - 12,728' TVD

KOP: 12,158' MD, 12,155' TVD
EOC: 13,058' MD, 12,728' TVD

Lateral: 23,604' MD, 12,728' TVD
Upper Most Perf:
100' FNL & 1650' FWL Sec. 16
Lower Most Perf:
100' FNL & 330' FWL Sec. 16
BH Location: 100' FNL & 330' FWL Sec. 16 T-26-S R-33-E

eog resources

Braswell 16 State 741H

4b. CASING PROGRAM Primary APD Design B:

Hole Size	Interval MD From (ft)	Interval MD To (ft)	Interval TVD From (ft)	Interval TVD To (ft)	Csg OD	Weight	Grade	Conn
16"	0	963	0	963	13-3/8"	54.5#	J-55	STC
12-1/4"	0	4,839	0	4,836	10-3/4"	40.5#	J-55	STC
9-7/8"	0	12,158	0	12,155	8-5/8"	32#	P110-HSCY	GB CD Butt 9.03
7-7/8"	0	12,208	0	12,205	6"	22.3#	P110-EC	DWC/C IS
6-3/4"	12,208	23,604	12,205	12,728	5-1/2"	20#	P110-EC	DWC/C IS MS

**For highlighted rows above, variance is requested to run entire string of either 6" or 5-1/2" casing string above due to availability.

Variance is requested to waive the centralizer requirements for the 10-3/4" and 8-5/8" casings in the 12-1/4" and 9-7/8" hole sizes. An expansion additive will be utilized, in the cement slurry, for the entire length of the 12-1/4" and 9-7/8" hole intervals to maximize cement bond and zonal isolation.

Variance is also requested to waive any centralizer requirements for the 6" and 5-1/2" casings in the 7-7/8" and 6-3/4" hole sizes. An expansion additive will be utilized, in the cement slurry, for the entire length of the 7-7/8" and 6-3/4" hole intervals to maximize cement bond and zonal isolation.

Variance is also requested to waive the annular clearance requirements for the 6" casing by 8-5/8" casing annulus to the proposed top of cement.

EOG requests permission to allow deviation from the 0.422'' annulus clearance requirement from Onshore Order #2 under the following conditions:

- Annular clearance to meet or exceed 0.422'' between intermediate casing ID and production casing coupling only on the first 500' overlap between both casing strings.
- Annular clearance less than 0.422'' is acceptable for the production open hole section.

5b. Cementing Program:

Depth	No. Sacks	Wt. ppg	Yld Ft3/sk	Slurry Description
963' 13-3/8"	290	12.5	2.09	Lead: Class C/H + additives (TOC @ Surface)
	80	13.2	1.58	Tail: Class C/H + additives (TOC @ 770' TVD)
4,836' 10-3/4"	380	11.5	2.86	Lead: Class C/H + additives (TOC @ surface)
	690	13.2	1.58	Tail: Class C/H + additives (TOC @ 3,836' TVD)
12,155' 8-5/8"	290	9.0	4.71	Lead: Class C/H + additives (TOC @ surface)
	680	14.8	1.35	Tail: Class C/H + additives (TOC @ 7,337' TVD)
23,604' 6" 5-1/2"	430	9.0	4.71	Lead: Class C/H + additives (TOC @ Surface)
	790	12.5	2.09	Tail: Class C/H + additives (TOC @ 11,155' TVD)

**If using Class C past 7500', the slurry will meet the regulatory requirments and specifications of Class H.

Braswell 16 State 741H

Additive	Purpose
Bentonite Gel	Lightweight/Lost circulation prevention
Calcium Chloride	Accelerator
Cello-flake	Lost circulation prevention
Sodium Metasilicate	Accelerator
MagOx	Expansive agent
Pre-Mag-M	Expansive agent
Sodium Chloride	Accelerator
FL-62	Fluid loss control
Halad-344	Fluid loss control
Halad-9	Fluid loss control
HR-601	Retarder
Microbond	Expansive Agent

If a beaded cement slurry is pumped, EOG intends to bring the beaded cement slurry to surface, and follow up with a bradenhead down to the Brushy. As a contigency, EOG requests variance from minimum standards to pump a two stage cement job on the 8-5/8" intermediate casing string with the tail stage being pumped conventionally with the calculated top of cement at the Brushy Canyon (7,537') and the second stage performed as a bradenhead squeeze with planned cement from the Brushy Canyon to surface. If necessary, a top out consisting of Class C/H cement + addtives (2.30 yld, 12.91 ppg) will be executed as a contingency. Top will be verified by CBL if primary job does not circulate to surface.

If a cement slurry of greater weight than the beaded slurry is pumped, EOG will attempt to bring the slurry to surface. In the event the cement does not circulate to surface, EOG requests the ability to bradenhead cement.

EOG also requests a variance to pump a bradenhead cement on the production cement job, in the event the primary job does not circulate to surface. If the primary cement job does not circulate to surface, a CBL will be ran to determine the TOC.

EOG requests a variance to set the intermediate casing shoe in the Bone Spring formation OR the Wolfcamp formation, depending on depletion in the area and well conditions. EOG will monitor the well and ensure the well is static before casing operations begin.

EOG will report to the BLM the volume of fluid (limited to 5 bbls) used to flush intermediate casing valves following backside cementing procedures.

Mud Program:

Measured Depth	Type	Weight (ppg)	Viscosity	Water Loss
0 – 963'	Fresh - Gel	8.6-8.8	28-34	N/c
963' – 4,836'	Brine	9.8-10.8	28-34	N/c
4,836’ – 12,155'	Cut Brine	8.5-10.8	58-68	N/c - 6
12,155’ – 23,604’ Lateral	Oil Base	10.0-14.0	58-68	4 - 6

eog resources

Braswell 16 State 741H

234' FNL
1559' FWL
Section 16
T-26-S, R-33-E

Revised Wellbore
Primary APD Design B

API: 30-025-***

KB: 3302'
GL: 3277'

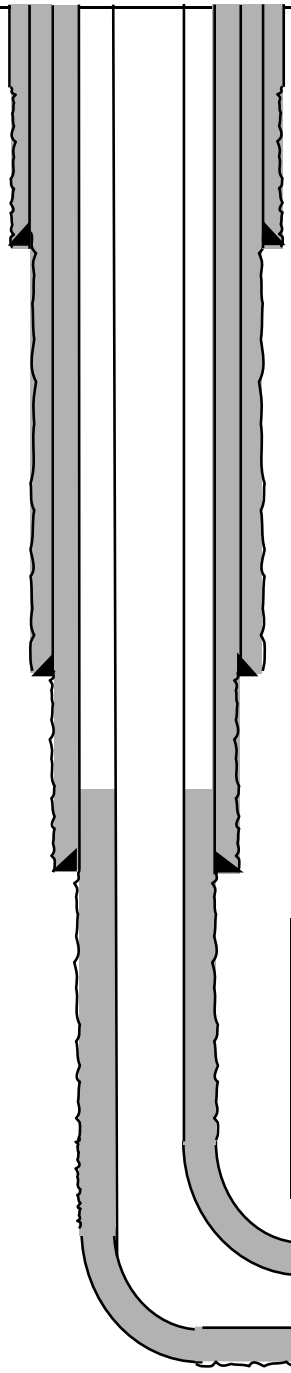

Bit Size: 16"
13.375, 54.5#, J-55, STC
0' - 963' MD
0' - 963' TVD

Bit Size: 12-1/4"
10.75, 40.5#, J-55, STC
0' - 4,839' MD
0' - 4,836' TVD

Bit Size: 9-7/8"
8.625, 32#, P110-HSCY, GB CD Butt 9.03
0' - 12,158' MD
0' - 12,155' TVD

Bit Size: 7-7/8"|6-3/4"
6, 22.3#, P110-EC, DWC/C IS
0' - 12,208' MD
0' - 12,205' TVD
5.5, 20#, P110-EC, DWC/C IS MS
12,208' - 23,604' MD
12,205' - 12,728' TVD

TOC: 11,158' MD, 11,155' TVD

Lateral: 23,604' MD, 12,728' TVD
Upper Most Perf:
100' FNL & 1650' FWL Sec. 16
Lower Most Perf:
100' FNL & 330' FWL Sec. 16
BH Location: 100' FNL & 330' FWL Sec. 16 T-26-S R-33-E

KOP: 12,158' MD, 12,155' TVD
EOC: 13,058' MD, 12,728' TVD

eog resources

Braswell 16 State 741H

4c. CASING PROGRAM Primary APD Design C:

Hole Size	Interval MD From (ft)	Interval MD To (ft)	Interval TVD From (ft)	Interval TVD To (ft)	Csg OD	Weight	Grade	Conn
16"	0	963	0	963	13-3/8"	54.5#	J-55	STC
9-7/8"	0	4,839	0	4,836	8-5/8"	32#	P110-HSCY	GB CD Butt 9.03
9-7/8"	4,839	12,158	4,836	12,155	8-5/8"	32#	P110-HSCY	GB CD Butt 9.03
7-7/8"	0	12,208	0	12,205	6"	22.3#	P110-EC	DWC/C IS
6-3/4"	12,208	23,604	12,205	12,728	5-1/2"	20#	P110-EC	DWC/C IS MS

**For highlighted rows above, variance is requested to run entire string of either 6" or 5-1/2" casing string above due to availability.

Variance is requested to waive the centralizer requirements for the 8-5/8" casing in the 9-7/8" hole size. An expansion additive will be utilized, in the cement slurry, for the entire length of the 9-7/8" hole interval to maximize cement bond and zonal isolation.

Variance is also requested to waive any centralizer requirements for the 6" and 5-1/2" casings in the 7-7/8" and 6-3/4" hole sizes. An expansion additive will be utilized, in the cement slurry, for the entire length of the 7-7/8" and 6-3/4" hole intervals to maximize cement bond and zonal isolation.

Variance is also requested to waive the annular clearance requirements for the 6" casing by 8-5/8" casing annulus to the proposed top of cement.

EOG requests permission to allow deviation from the 0.422'' annulus clearance requirement from Onshore Order #2 under the following conditions:

- Annular clearance to meet or exceed 0.422'' between intermediate casing ID and production casing coupling only on the first 500' overlap between both casing strings.
- Annular clearance less than 0.422'' is acceptable for the production open hole section.

5c. CEMENTING PROGRAM: DV Tool Utilized

Depth	No. Sacks	Wt. ppg	Yld Ft3/sk	Slurry Description
963' 13-3/8"	290	12.5	2.09	Lead: Class C/H + additives (TOC @ Surface)
	80	13.2	1.58	Tail: Class C/H + additives (TOC @ 770')
4,836' 8-5/8" DV Tool @ 4,836'	380	11.5	2.86	Lead: Class C/H + additives (TOC @ surface)
	75	12.5	2.09	Tail: Class C/H + additives (TOC @ 3,836')
12,155' 8-5/8"	131	10.7	3.36	Lead: Class C/H + additives (TOC @ 4,736')
	540	14.8	1.35	Tail: Class C/H + additives (TOC @ 7,437')
23,604' 6"|5-1/2"	520	9	4.71	Lead: Class C/H + additives (TOC @ Surface)
	691	12.5	2.09	Tail: Class C/H + additives (TOC @ 11,155')
	1327	12.5	2.09	If brought to surface: Class C/H + additives (TOC @ Surface)

***If the DV tool is Utilized, the first 4,836' will be drilled with 11'' to allow for the DV tool clearance requirements.**

**If using Class C past 7500', the slurry will meet the regulatory requirments and specifications of Class H.

eog resources

Braswell 16 State 741H

Cementing Program: DV Tool NOT Utilized

Depth	No. Sacks	Wt. ppg	Yld Ft3/sk	Slurry Description
963' 13-3/8"	210	13.5	1.73	Lead: Class C/H + additives (TOC @ Surface)
	90	14.8	1.34	Tail: Class C/H + additives (TOC @ 763')
12,155' 8-5/8"	426	9.0	4.70	Lead: Class C/H + additives (TOC @ Surface)
	483	13.2	1.85	Tail: Class C/H + additives (TOC @ 7,437')
23,604' 6"|5-1/2"	250	9.0	4.70	Lead: Class C/H + additives (TOC @ Surface)
	1240	13.2	1.31	Tail: Class C/H + additives (TOC @ 11,155')
	1327	12.5	2.09	If brought to surface: Class C/H + additives (TOC @ Surface)

Additive	Purpose
Bentonite Gel	Lightweight/Lost circulation prevention
Calcium Chloride	Accelerator
Cello-flake	Lost circulation prevention
Sodium Metasilicate	Accelerator
MagOx	Expansive agent
Pre-Mag-M	Expansive agent
Sodium Chloride	Accelerator
FL-62	Fluid loss control
Halad-344	Fluid loss control
Halad-9	Fluid loss control
HR-601	Retarder
Microbond	Expansive Agent

If a beaded cement slurry is pumped, EOG intends to bring the beaded cement slurry to surface, and follow up with a bradenhead down to the Brushy. As a contigency, EOG requests variance from minimum standards to pump a two stage cement job on the 8-5/8" intermediate casing string with the tail stage being pumped conventionally with the calculated top of cement at the Brushy Canyon (7,537') and the second stage performed as a bradenhead squeeze with planned cement from the Brushy Canyon to surface. If necessary, a top out consisting of Class C/H cement + addtives (2.30 yld, 12.91 ppg) will be executed as a contingency. Top will be verified by CBL if primary job does not circulate to surface.

If a cement slurry of greater weight than the beaded slurry is pumped, EOG will attempt to bring the slurry to surface. In the event the cement does not circulate to surface, EOG requests the ability to bradenhead cement.

EOG also requests a variance to pump a bradenhead cement on the production cement job, in the event the primary job does not circulate to surface. If the primary cement job does not circulate to surface, a CBL will be ran to determine the TOC.

Braswell 16 State 741H

EOG requests a variance to set the intermediate casing shoe in the Bone Spring formation OR the Wolfcamp formation, depending on depletion in the area and well conditions. EOG will monitor the well and ensure the well is static before casing operations begin.

Mud Program:

Depth	Type	Weight (ppg)	Viscosity	Water Loss
0 – 963'	Fresh - Gel	8.6-8.8	28-34	N/c
963' – 4,836'	Brine	9.8-10.8	28-34	N/c
4,836’ – 12,155'	Water - Gel	8.7-9.4	58-68	N/c - 6
12,155’ – 23,604’ Lateral	Oil Base	10.0-14.0	58-68	4 - 6

eog resources

Braswell 16 State 741H

234' FNL
1559' FWL
Section 16
T-26-S, R-33-E

Proposed Wellbore
Primary APD Design C

API: 30-025-***

KB: 3302'
GL: 3277'

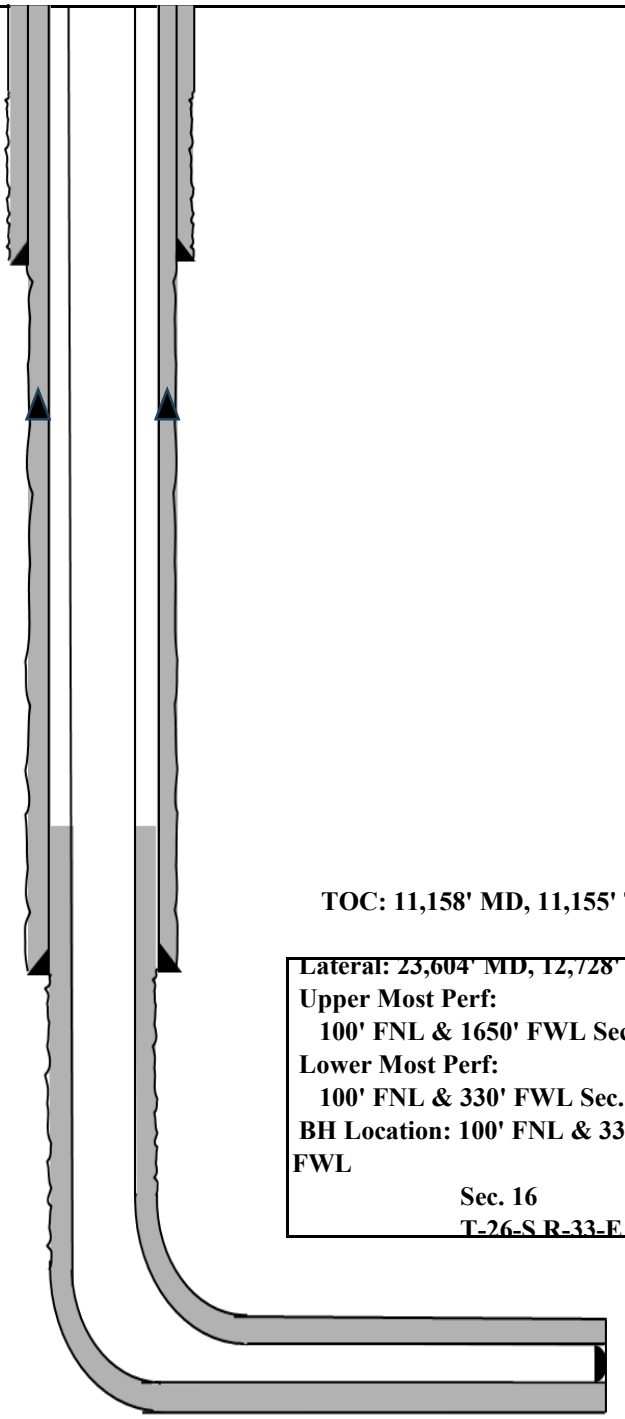

Bit Size: 16"
13-3/8", 54.5#, J-55, STC,
0' - 963' MD
0' - 963' TVD

DV Tool @ 4,836'

Bit Size: 9-7/8"
8-5/8" 32#, P110-HSCY, GB CD Butt 9.03,
0' - 4,839' MD
0' - 4,836' TVD

6" 22.3#, P110-EC, DWC/C IS,
4,839' - 12,158' MD
4,836' - 12,155' TVD

TOC: 11,158' MD, 11,155' TVD

Bit Size: 7-7/8"|6-3/4"
6", 22.3#, P110-EC, DWC/C IS
0' - 12,208' MD
0' - 12,205' TVD
5-1/2", 20#, P110-EC, DWC/C IS MS
12,208' - 23,604' MD
12,205' - 12,728' TVD

Lateral: 23,604' MD, 12,728' TVD
Upper Most Perf:
100' FNL & 1650' FWL Sec. 16
Lower Most Perf:
100' FNL & 330' FWL Sec. 16
BH Location: 100' FNL & 330' FWL
Sec. 16
T-26-S R-33-E

KOP: 12,158' MD, 12,155' TVD
EOC: 13,058' MD, 12,728' TVD

Braswell 16 State #741H

TUBING REQUIREMENTS:

EOG respectively requests an exception to the following NMOCD rule:

- 19.15.16.10 Casing AND TUBING REQUIREMENTS:
  J (3): "The operator shall set tubing as near the bottom as practical and tubing perforations shall not be more than 250 feet above top of pay zone."

With horizontal flowing and gas lifted wells an end of tubing depth placed at or slightly above KOP is a conservative way to ensure the tubing stays clean from debris, plugging, and allows for fewer well interventions post offset completion. The deeper the tubulars are run into the curve, the higher the probability is that the tubing will become stuck in sand and or well debris as the well produces over time. An additional consideration for EOT placement during artificial lift installations is avoiding the high dog leg severity and inclinations found in the curve section of the wellbore to help improve reliability and performance. Dog leg severity and inclinations tend not to hamper gas lifted or flowing wells, but they do effect other forms of artificial lift like rod pump or ESP (electric submersible pump). Keeping the EOT above KOP is an industry best practice for those respective forms of artificial lift.

VARIANCE REQUESTS:

EOG will attempt to bring the intermediate cement to surface. EOG requests the option to perform a bradenhead cement job on the intermediate after circulating cement to surface. If cement is not circulated to surface, EOG requests the option to perform a bradenhead cement job on the intermediate. EOG will run a CBL if cement is not circulated to surface.

EOG is required to bring the production cement at least 200' inside the intermediate casing. EOG requests the option to bradenhead the production cement. If cement is not circulated to surface conventionally, EOG will run a CBL.

eog resources

Braswell 16 State #741H

Hydrogen Sulfide Plan Summary

A. All personnel shall receive proper H2S training in accordance with Onshore Order III.C.3.a.

B. Briefing Area: two perpendicular areas will be designated by signs and readily accessible.

C. Required Emergency Equipment:

■ Well control equipment

a. Flare line 150' from wellhead to be ignited by flare gun.
b. Choke manifold with a remotely operated choke.
c. Mud/gas separator

■ Protective equipment for essential personnel.

Breathing apparatus:

a. Rescue Packs (SCBA) — 1 unit shall be placed at each breathing area, 2 shall be stored in the safety trailer.
b. Work/Escape packs —4 packs shall be stored on the rig floor with sufficient air hose not to restrict work activity.
c. Emergency Escape Packs —4 packs shall be stored in the doghouse for emergency evacuation.

Auxiliary Rescue Equipment:

a. Stretcher
b. Two OSHA full body harness
c. 100 ft 5/8 inch OSHA approved rope
d. 1-20# class ABC fire extinguisher

■ H2S detection and monitoring equipment:

The stationary detector with three sensors will be placed in the upper dog house if equipped, set to visually alarm @ 10 ppm and audible @ 14 ppm. Calibrate a minimum of every 30 days or as needed. The sensors will be placed in the following places: Rig floor / Bell nipple / End of flow line or where well bore fluid is being discharged.
(Gas sample tubes will be stored in the safety trailer)

■ Visual warning systems.

a. One color code condition sign will be placed at the entrance to the site reflecting the possible conditions at the site.
b. A colored condition flag will be on display, reflecting the current condition at the site at the time.
c. Two wind socks will be placed in strategic locations, visible from all angles.

Braswell 16 State #741H

- Mud program:

  The mud program has been designed to minimize the volume of H2S circulated to surface. The operator will have the necessary mud products to minimize hazards while drilling in H2S bearing zones.

- Metallurgy:
  All drill strings, casings, tubing, wellhead, blowout preventer, drilling spool, kill lines, choke manifold and lines, and valves shall be suitable for H2S service.

- Communication:
  Communication will be via cell phones and land lines where available.

eog resources

Braswell 16 State #741H

Emergency Assistance Telephone List

PUBLIC SAFETY:		**911 or**
Lea County Sheriff's Department		(575) 396-3611
Rod Coffman		
Fire Department:		
Carlsbad		(575) 885-3125
Artesia		(575) 746-5050
Hospitals:		
Carlsbad		(575) 887-4121
Artesia		(575) 748-3333
Hobbs		(575) 392-1979
Dept. of Public Safety/Carlsbad		(575) 748-9718
Highway Department		(575) 885-3281
New Mexico Oil Conservation		(575) 476-3440
NMOCD Inspection Group - South		(575) 626-0830
U.S. Dept. of Labor		(575) 887-1174
EOG Resources, Inc.		
EOG / Midland	Office	(432) 686-3600
Safety:		
Brian Chandler (HSE Manager)	Office	(432) 686-3695
	Cell	(817) 239-0251
H&P Drilling		
H&P Drilling	Office	(432) 563-5757
H&P 651 Drilling Rig	Rig	(903) 509-7131

Midland

Lea County, NM (NAD 83 NME)
Braswell 16 State
#741H

OH

Plan: Plan #0.1 RT

Standard Planning Report

19 October, 2026

Planning Report

Database:	EDT_18	**Local Co-ordinate Reference:**	Well #741H
Company:	Midland	**TVD Reference:**	kb = 26' @ 3303.0usft
Project:	Lea County, NM (NAD 83 NME)	**MD Reference:**	kb = 26' @ 3303.0usft
Site:	Braswell 16 State	**North Reference:**	Grid
Well:	#741H	**Survey Calculation Method:**	Minimum Curvature
Wellbore:	OH		
Design:	Plan #0.1 RT		

Project Lea County, NM (NAD 83 NME)

Map System:	US State Plane 1983	**System Datum:**	Mean Sea Level
Geo Datum:	North American Datum 1983		
Map Zone:	New Mexico Eastern Zone		

Site Braswell 16 State

Site Position:		**Northing:**	382,755.00 usft	**Latitude:**	32° 3' 0.088 N
From:	Map	**Easting:**	775,286.00 usft	**Longitude:**	103° 34' 41.632 W
Position Uncertainty:	0.0 usft	**Slot Radius:**	13-3/16 "		

Well #741H

Well Position	**+N/-S**	0.0 usft	**Northing:**	382,787.00 usft	**Latitude:**	32° 3' 0.458 N
	+E/-W	0.0 usft	**Easting:**	774,510.00 usft	**Longitude:**	103° 34' 50.645 W
Position Uncertainty		0.0 usft	**Wellhead Elevation:**	usft	**Ground Level:**	3,277.0 usft
Grid Convergence:		0.40 °				

Wellbore OH

Magnetics	Model Name	Sample Date	Declination (°)	Dip Angle (°)	Field Strength (nT)
	IGRF2025	10/19/2026	6.13	59.55	46,759.25265859

Design Plan #0.1 RT

Audit Notes:

Version:		**Phase:**	PLAN	**Tie On Depth:**	0.0

Vertical Section:	Depth From (TVD) (usft)	+N/-S (usft)	+E/-W (usft)	Direction (°)
	0.0	0.0	0.0	179.59

Plan Survey Tool Program **Date** 10/19/2026

	Depth From (usft)	Depth To (usft)	Survey (Wellbore)	Tool Name	Remarks
1	0.0	23,603.5	Plan #0.1 RT (OH)	EOG MWD+IFR1	
				MWD + IFR1	

Planning Report

Database:	EDT_18	**Local Co-ordinate Reference:**	Well #741H
Company:	Midland	**TVD Reference:**	kb = 26' @ 3303.0usft
Project:	Lea County, NM (NAD 83 NME)	**MD Reference:**	kb = 26' @ 3303.0usft
Site:	Braswell 16 State	**North Reference:**	Grid
Well:	#741H	**Survey Calculation Method:**	Minimum Curvature
Wellbore:	OH		
Design:	Plan #0.1 RT		

Plan Sections

Measured Depth (usft)	Inclination (°)	Azimuth (°)	Vertical Depth (usft)	+N/-S (usft)	+E/-W (usft)	Dogleg Rate (°/100usft)	Build Rate (°/100usft)	Turn Rate (°/100usft)	TFO (°)	Target
0.0	0.00	0.00	0.0	0.0	0.0	0.00	0.00	0.00	0.00	
1,063.0	0.00	0.00	1,063.0	0.0	0.0	0.00	0.00	0.00	0.00	
1,154.7	1.83	25.81	1,154.7	1.3	0.6	2.00	2.00	0.00	25.81	
7,448.5	1.83	25.81	7,445.3	182.7	88.4	0.00	0.00	0.00	0.00	
7,540.3	0.00	0.00	7,537.0	184.0	89.0	2.00	-2.00	0.00	180.00	
12,158.3	0.00	0.00	12,155.0	184.0	89.0	0.00	0.00	0.00	0.00	KOP(Braswell 16 Stat
12,399.4	24.12	178.85	12,389.1	134.0	90.0	10.00	10.00	74.16	178.85	FTP(Braswell 16 Stat
13,058.3	90.00	179.59	12,728.0	-388.9	95.7	10.00	10.00	0.11	0.80	
17,135.4	90.00	179.59	12,728.0	-4,466.0	125.0	0.00	0.00	0.00	0.00	PC 1(Braswell 16 Sta
17,887.6	90.00	269.85	12,728.0	-4,946.9	-351.2	12.00	0.00	12.00	90.00	
18,252.7	90.00	269.85	12,728.0	-4,947.8	-716.3	0.00	0.00	0.00	0.00	
19,000.3	90.00	359.56	12,728.0	-4,474.0	-1,195.0	12.00	0.00	12.00	90.00	PC4(Braswell 16 Stat
23,603.5	90.00	359.56	12,728.0	129.0	-1,230.0	0.00	0.00	0.00	0.00	PBHL(Braswell 16 Sta

Planning Report

Database:	EDT_18	**Local Co-ordinate Reference:**	Well #741H
Company:	Midland	**TVD Reference:**	kb = 26' @ 3303.0usft
Project:	Lea County, NM (NAD 83 NME)	**MD Reference:**	kb = 26' @ 3303.0usft
Site:	Braswell 16 State	**North Reference:**	Grid
Well:	#741H	**Survey Calculation Method:**	Minimum Curvature
Wellbore:	OH		
Design:	Plan #0.1 RT		

Planned Survey

Measured Depth (usft)	Inclination (°)	Azimuth (°)	Vertical Depth (usft)	+N/-S (usft)	+E/-W (usft)	Vertical Section (usft)	Dogleg Rate (°/100usft)	Build Rate (°/100usft)	Turn Rate (°/100usft)
0.0	0.00	0.00	0.0	0.0	0.0	0.0	0.00	0.00	0.00
100.0	0.00	0.00	100.0	0.0	0.0	0.0	0.00	0.00	0.00
200.0	0.00	0.00	200.0	0.0	0.0	0.0	0.00	0.00	0.00
300.0	0.00	0.00	300.0	0.0	0.0	0.0	0.00	0.00	0.00
400.0	0.00	0.00	400.0	0.0	0.0	0.0	0.00	0.00	0.00
500.0	0.00	0.00	500.0	0.0	0.0	0.0	0.00	0.00	0.00
600.0	0.00	0.00	600.0	0.0	0.0	0.0	0.00	0.00	0.00
700.0	0.00	0.00	700.0	0.0	0.0	0.0	0.00	0.00	0.00
800.0	0.00	0.00	800.0	0.0	0.0	0.0	0.00	0.00	0.00
900.0	0.00	0.00	900.0	0.0	0.0	0.0	0.00	0.00	0.00
1,000.0	0.00	0.00	1,000.0	0.0	0.0	0.0	0.00	0.00	0.00
1,063.0	0.00	0.00	1,063.0	0.0	0.0	0.0	0.00	0.00	0.00
1,100.0	0.74	25.81	1,100.0	0.2	0.1	-0.2	2.00	2.00	0.00
1,154.7	1.83	25.81	1,154.7	1.3	0.6	-1.3	2.00	2.00	0.00
1,200.0	1.83	25.81	1,200.0	2.6	1.3	-2.6	0.00	0.00	0.00
1,300.0	1.83	25.81	1,299.9	5.5	2.7	-5.5	0.00	0.00	0.00
1,400.0	1.83	25.81	1,399.9	8.4	4.1	-8.4	0.00	0.00	0.00
1,500.0	1.83	25.81	1,499.8	11.3	5.5	-11.2	0.00	0.00	0.00
1,600.0	1.83	25.81	1,599.8	14.2	6.8	-14.1	0.00	0.00	0.00
1,700.0	1.83	25.81	1,699.7	17.0	8.2	-17.0	0.00	0.00	0.00
1,800.0	1.83	25.81	1,799.7	19.9	9.6	-19.8	0.00	0.00	0.00
1,900.0	1.83	25.81	1,899.6	22.8	11.0	-22.7	0.00	0.00	0.00
2,000.0	1.83	25.81	1,999.6	25.7	12.4	-25.6	0.00	0.00	0.00
2,100.0	1.83	25.81	2,099.5	28.6	13.8	-28.5	0.00	0.00	0.00
2,200.0	1.83	25.81	2,199.4	31.4	15.2	-31.3	0.00	0.00	0.00
2,300.0	1.83	25.81	2,299.4	34.3	16.6	-34.2	0.00	0.00	0.00
2,400.0	1.83	25.81	2,399.3	37.2	18.0	-37.1	0.00	0.00	0.00
2,500.0	1.83	25.81	2,499.3	40.1	19.4	-39.9	0.00	0.00	0.00
2,600.0	1.83	25.81	2,599.2	43.0	20.8	-42.8	0.00	0.00	0.00
2,700.0	1.83	25.81	2,699.2	45.8	22.2	-45.7	0.00	0.00	0.00
2,800.0	1.83	25.81	2,799.1	48.7	23.6	-48.6	0.00	0.00	0.00
2,900.0	1.83	25.81	2,899.1	51.6	25.0	-51.4	0.00	0.00	0.00
3,000.0	1.83	25.81	2,999.0	54.5	26.4	-54.3	0.00	0.00	0.00
3,100.0	1.83	25.81	3,099.0	57.4	27.8	-57.2	0.00	0.00	0.00
3,200.0	1.83	25.81	3,198.9	60.3	29.1	-60.0	0.00	0.00	0.00
3,300.0	1.83	25.81	3,298.9	63.1	30.5	-62.9	0.00	0.00	0.00
3,400.0	1.83	25.81	3,398.8	66.0	31.9	-65.8	0.00	0.00	0.00
3,500.0	1.83	25.81	3,498.8	68.9	33.3	-68.7	0.00	0.00	0.00
3,600.0	1.83	25.81	3,598.7	71.8	34.7	-71.5	0.00	0.00	0.00
3,700.0	1.83	25.81	3,698.7	74.7	36.1	-74.4	0.00	0.00	0.00
3,800.0	1.83	25.81	3,798.6	77.5	37.5	-77.3	0.00	0.00	0.00
3,900.0	1.83	25.81	3,898.6	80.4	38.9	-80.1	0.00	0.00	0.00
4,000.0	1.83	25.81	3,998.5	83.3	40.3	-83.0	0.00	0.00	0.00
4,100.0	1.83	25.81	4,098.5	86.2	41.7	-85.9	0.00	0.00	0.00
4,200.0	1.83	25.81	4,198.4	89.1	43.1	-88.8	0.00	0.00	0.00
4,300.0	1.83	25.81	4,298.4	92.0	44.5	-91.6	0.00	0.00	0.00
4,400.0	1.83	25.81	4,398.3	94.8	45.9	-94.5	0.00	0.00	0.00
4,500.0	1.83	25.81	4,498.3	97.7	47.3	-97.4	0.00	0.00	0.00
4,600.0	1.83	25.81	4,598.2	100.6	48.7	-100.2	0.00	0.00	0.00
4,700.0	1.83	25.81	4,698.2	103.5	50.1	-103.1	0.00	0.00	0.00
4,800.0	1.83	25.81	4,798.1	106.4	51.4	-106.0	0.00	0.00	0.00
4,900.0	1.83	25.81	4,898.1	109.2	52.8	-108.9	0.00	0.00	0.00
5,000.0	1.83	25.81	4,998.0	112.1	54.2	-111.7	0.00	0.00	0.00
5,100.0	1.83	25.81	5,098.0	115.0	55.6	-114.6	0.00	0.00	0.00

Planning Report

Database:	EDT_18	**Local Co-ordinate Reference:**	Well #741H
Company:	Midland	**TVD Reference:**	kb = 26' @ 3303.0usft
Project:	Lea County, NM (NAD 83 NME)	**MD Reference:**	kb = 26' @ 3303.0usft
Site:	Braswell 16 State	**North Reference:**	Grid
Well:	#741H	**Survey Calculation Method:**	Minimum Curvature
Wellbore:	OH		
Design:	Plan #0.1 RT		

Planned Survey

Measured Depth (usft)	Inclination (°)	Azimuth (°)	Vertical Depth (usft)	+N/-S (usft)	+E/-W (usft)	Vertical Section (usft)	Dogleg Rate (°/100usft)	Build Rate (°/100usft)	Turn Rate (°/100usft)
5,200.0	1.83	25.81	5,197.9	117.9	57.0	-117.5	0.00	0.00	0.00
5,300.0	1.83	25.81	5,297.9	120.8	58.4	-120.3	0.00	0.00	0.00
5,400.0	1.83	25.81	5,397.8	123.6	59.8	-123.2	0.00	0.00	0.00
5,500.0	1.83	25.81	5,497.8	126.5	61.2	-126.1	0.00	0.00	0.00
5,600.0	1.83	25.81	5,597.7	129.4	62.6	-129.0	0.00	0.00	0.00
5,700.0	1.83	25.81	5,697.7	132.3	64.0	-131.8	0.00	0.00	0.00
5,800.0	1.83	25.81	5,797.6	135.2	65.4	-134.7	0.00	0.00	0.00
5,900.0	1.83	25.81	5,897.6	138.1	66.8	-137.6	0.00	0.00	0.00
6,000.0	1.83	25.81	5,997.5	140.9	68.2	-140.4	0.00	0.00	0.00
6,100.0	1.83	25.81	6,097.5	143.8	69.6	-143.3	0.00	0.00	0.00
6,200.0	1.83	25.81	6,197.4	146.7	71.0	-146.2	0.00	0.00	0.00
6,300.0	1.83	25.81	6,297.3	149.6	72.4	-149.1	0.00	0.00	0.00
6,400.0	1.83	25.81	6,397.3	152.5	73.7	-151.9	0.00	0.00	0.00
6,500.0	1.83	25.81	6,497.2	155.3	75.1	-154.8	0.00	0.00	0.00
6,600.0	1.83	25.81	6,597.2	158.2	76.5	-157.7	0.00	0.00	0.00
6,700.0	1.83	25.81	6,697.1	161.1	77.9	-160.5	0.00	0.00	0.00
6,800.0	1.83	25.81	6,797.1	164.0	79.3	-163.4	0.00	0.00	0.00
6,900.0	1.83	25.81	6,897.0	166.9	80.7	-166.3	0.00	0.00	0.00
7,000.0	1.83	25.81	6,997.0	169.8	82.1	-169.2	0.00	0.00	0.00
7,100.0	1.83	25.81	7,096.9	172.6	83.5	-172.0	0.00	0.00	0.00
7,200.0	1.83	25.81	7,196.9	175.5	84.9	-174.9	0.00	0.00	0.00
7,300.0	1.83	25.81	7,296.8	178.4	86.3	-177.8	0.00	0.00	0.00
7,400.0	1.83	25.81	7,396.8	181.3	87.7	-180.6	0.00	0.00	0.00
7,448.5	1.83	25.81	7,445.3	182.7	88.4	-182.0	0.00	0.00	0.00
7,500.0	0.81	25.81	7,496.7	183.7	88.9	-183.1	2.00	-2.00	0.00
7,540.3	0.00	0.00	7,537.0	184.0	89.0	-183.4	2.00	-2.00	0.00
7,600.0	0.00	0.00	7,596.7	184.0	89.0	-183.4	0.00	0.00	0.00
7,700.0	0.00	0.00	7,696.7	184.0	89.0	-183.4	0.00	0.00	0.00
7,800.0	0.00	0.00	7,796.7	184.0	89.0	-183.4	0.00	0.00	0.00
7,900.0	0.00	0.00	7,896.7	184.0	89.0	-183.4	0.00	0.00	0.00
8,000.0	0.00	0.00	7,996.7	184.0	89.0	-183.4	0.00	0.00	0.00
8,100.0	0.00	0.00	8,096.7	184.0	89.0	-183.4	0.00	0.00	0.00
8,200.0	0.00	0.00	8,196.7	184.0	89.0	-183.4	0.00	0.00	0.00
8,300.0	0.00	0.00	8,296.7	184.0	89.0	-183.4	0.00	0.00	0.00
8,400.0	0.00	0.00	8,396.7	184.0	89.0	-183.4	0.00	0.00	0.00
8,500.0	0.00	0.00	8,496.7	184.0	89.0	-183.4	0.00	0.00	0.00
8,600.0	0.00	0.00	8,596.7	184.0	89.0	-183.4	0.00	0.00	0.00
8,700.0	0.00	0.00	8,696.7	184.0	89.0	-183.4	0.00	0.00	0.00
8,800.0	0.00	0.00	8,796.7	184.0	89.0	-183.4	0.00	0.00	0.00
8,900.0	0.00	0.00	8,896.7	184.0	89.0	-183.4	0.00	0.00	0.00
9,000.0	0.00	0.00	8,996.7	184.0	89.0	-183.4	0.00	0.00	0.00
9,100.0	0.00	0.00	9,096.7	184.0	89.0	-183.4	0.00	0.00	0.00
9,200.0	0.00	0.00	9,196.7	184.0	89.0	-183.4	0.00	0.00	0.00
9,300.0	0.00	0.00	9,296.7	184.0	89.0	-183.4	0.00	0.00	0.00
9,400.0	0.00	0.00	9,396.7	184.0	89.0	-183.4	0.00	0.00	0.00
9,500.0	0.00	0.00	9,496.7	184.0	89.0	-183.4	0.00	0.00	0.00
9,600.0	0.00	0.00	9,596.7	184.0	89.0	-183.4	0.00	0.00	0.00
9,700.0	0.00	0.00	9,696.7	184.0	89.0	-183.4	0.00	0.00	0.00
9,800.0	0.00	0.00	9,796.7	184.0	89.0	-183.4	0.00	0.00	0.00
9,900.0	0.00	0.00	9,896.7	184.0	89.0	-183.4	0.00	0.00	0.00
10,000.0	0.00	0.00	9,996.7	184.0	89.0	-183.4	0.00	0.00	0.00
10,100.0	0.00	0.00	10,096.7	184.0	89.0	-183.4	0.00	0.00	0.00
10,200.0	0.00	0.00	10,196.7	184.0	89.0	-183.4	0.00	0.00	0.00
10,300.0	0.00	0.00	10,296.7	184.0	89.0	-183.4	0.00	0.00	0.00

Planning Report

Database:	EDT_18	**Local Co-ordinate Reference:**	Well #741H
Company:	Midland	**TVD Reference:**	kb = 26' @ 3303.0usft
Project:	Lea County, NM (NAD 83 NME)	**MD Reference:**	kb = 26' @ 3303.0usft
Site:	Braswell 16 State	**North Reference:**	Grid
Well:	#741H	**Survey Calculation Method:**	Minimum Curvature
Wellbore:	OH		
Design:	Plan #0.1 RT		

Planned Survey

Measured Depth (usft)	Inclination (°)	Azimuth (°)	Vertical Depth (usft)	+N/-S (usft)	+E/-W (usft)	Vertical Section (usft)	Dogleg Rate (°/100usft)	Build Rate (°/100usft)	Turn Rate (°/100usft)
10,400.0	0.00	0.00	10,396.7	184.0	89.0	-183.4	0.00	0.00	0.00
10,500.0	0.00	0.00	10,496.7	184.0	89.0	-183.4	0.00	0.00	0.00
10,600.0	0.00	0.00	10,596.7	184.0	89.0	-183.4	0.00	0.00	0.00
10,700.0	0.00	0.00	10,696.7	184.0	89.0	-183.4	0.00	0.00	0.00
10,800.0	0.00	0.00	10,796.7	184.0	89.0	-183.4	0.00	0.00	0.00
10,900.0	0.00	0.00	10,896.7	184.0	89.0	-183.4	0.00	0.00	0.00
11,000.0	0.00	0.00	10,996.7	184.0	89.0	-183.4	0.00	0.00	0.00
11,100.0	0.00	0.00	11,096.7	184.0	89.0	-183.4	0.00	0.00	0.00
11,200.0	0.00	0.00	11,196.7	184.0	89.0	-183.4	0.00	0.00	0.00
11,300.0	0.00	0.00	11,296.7	184.0	89.0	-183.4	0.00	0.00	0.00
11,400.0	0.00	0.00	11,396.7	184.0	89.0	-183.4	0.00	0.00	0.00
11,500.0	0.00	0.00	11,496.7	184.0	89.0	-183.4	0.00	0.00	0.00
11,600.0	0.00	0.00	11,596.7	184.0	89.0	-183.4	0.00	0.00	0.00
11,700.0	0.00	0.00	11,696.7	184.0	89.0	-183.4	0.00	0.00	0.00
11,800.0	0.00	0.00	11,796.7	184.0	89.0	-183.4	0.00	0.00	0.00
11,900.0	0.00	0.00	11,896.7	184.0	89.0	-183.4	0.00	0.00	0.00
12,000.0	0.00	0.00	11,996.7	184.0	89.0	-183.4	0.00	0.00	0.00
12,100.0	0.00	0.00	12,096.7	184.0	89.0	-183.4	0.00	0.00	0.00
12,158.3	0.00	0.00	12,155.0	184.0	89.0	-183.4	0.00	0.00	0.00
12,200.0	4.17	178.85	12,196.7	182.5	89.0	-181.8	10.00	10.00	0.00
12,250.0	9.17	178.85	12,246.4	176.7	89.1	-176.0	10.00	10.00	0.00
12,300.0	14.18	178.85	12,295.3	166.6	89.3	-165.9	10.00	10.00	0.00
12,350.0	19.18	178.85	12,343.2	152.2	89.6	-151.6	10.00	10.00	0.00
12,399.4	24.12	178.85	12,389.1	134.0	90.0	-133.4	10.00	10.00	0.00
12,450.0	29.18	179.00	12,434.3	111.3	90.4	-110.7	10.00	10.00	0.29
12,500.0	34.18	179.10	12,476.8	85.1	90.9	-84.4	10.00	10.00	0.21
12,550.0	39.17	179.18	12,516.9	55.2	91.3	-54.6	10.00	10.00	0.16
12,600.0	44.17	179.25	12,554.3	22.0	91.8	-21.3	10.00	10.00	0.13
12,650.0	49.17	179.30	12,588.6	-14.4	92.2	15.0	10.00	10.00	0.11
12,700.0	54.17	179.35	12,619.6	-53.6	92.7	54.2	10.00	10.00	0.09
12,750.0	59.17	179.39	12,647.0	-95.3	93.1	96.0	10.00	10.00	0.08
12,800.0	64.17	179.43	12,670.7	-139.3	93.6	140.0	10.00	10.00	0.07
12,850.0	69.17	179.46	12,690.5	-185.2	94.0	185.9	10.00	10.00	0.07
12,900.0	74.17	179.50	12,706.2	-232.7	94.5	233.3	10.00	10.00	0.06
12,950.0	79.17	179.53	12,717.8	-281.3	94.9	282.0	10.00	10.00	0.06
13,000.0	84.17	179.55	12,725.0	-330.8	95.3	331.4	10.00	10.00	0.06
13,050.0	89.17	179.58	12,727.9	-380.7	95.6	381.3	10.00	10.00	0.06
13,058.3	90.00	179.59	12,728.0	-388.9	95.7	389.6	10.00	10.00	0.06
13,100.0	90.00	179.59	12,728.0	-430.7	96.0	431.3	0.00	0.00	0.00
13,200.0	90.00	179.59	12,728.0	-530.7	96.7	531.3	0.00	0.00	0.00
13,300.0	90.00	179.59	12,728.0	-630.7	97.4	631.3	0.00	0.00	0.00
13,400.0	90.00	179.59	12,728.0	-730.7	98.2	731.3	0.00	0.00	0.00
13,500.0	90.00	179.59	12,728.0	-830.7	98.9	831.3	0.00	0.00	0.00
13,600.0	90.00	179.59	12,728.0	-930.6	99.6	931.3	0.00	0.00	0.00
13,700.0	90.00	179.59	12,728.0	-1,030.6	100.3	1,031.3	0.00	0.00	0.00
13,800.0	90.00	179.59	12,728.0	-1,130.6	101.0	1,131.3	0.00	0.00	0.00
13,900.0	90.00	179.59	12,728.0	-1,230.6	101.8	1,231.3	0.00	0.00	0.00
14,000.0	90.00	179.59	12,728.0	-1,330.6	102.5	1,331.3	0.00	0.00	0.00
14,100.0	90.00	179.59	12,728.0	-1,430.6	103.2	1,431.3	0.00	0.00	0.00
14,200.0	90.00	179.59	12,728.0	-1,530.6	103.9	1,531.3	0.00	0.00	0.00
14,300.0	90.00	179.59	12,728.0	-1,630.6	104.6	1,631.3	0.00	0.00	0.00
14,400.0	90.00	179.59	12,728.0	-1,730.6	105.3	1,731.3	0.00	0.00	0.00
14,500.0	90.00	179.59	12,728.0	-1,830.6	106.1	1,831.3	0.00	0.00	0.00
14,600.0	90.00	179.59	12,728.0	-1,930.6	106.8	1,931.3	0.00	0.00	0.00

Planning Report

Database:	EDT_18	**Local Co-ordinate Reference:**	Well #741H
Company:	Midland	**TVD Reference:**	kb = 26' @ 3303.0usft
Project:	Lea County, NM (NAD 83 NME)	**MD Reference:**	kb = 26' @ 3303.0usft
Site:	Braswell 16 State	**North Reference:**	Grid
Well:	#741H	**Survey Calculation Method:**	Minimum Curvature
Wellbore:	OH		
Design:	Plan #0.1 RT		

Planned Survey

Measured Depth (usft)	Inclination (°)	Azimuth (°)	Vertical Depth (usft)	+N/-S (usft)	+E/-W (usft)	Vertical Section (usft)	Dogleg Rate (°/100usft)	Build Rate (°/100usft)	Turn Rate (°/100usft)
14,700.0	90.00	179.59	12,728.0	-2,030.6	107.5	2,031.3	0.00	0.00	0.00
14,800.0	90.00	179.59	12,728.0	-2,130.6	108.2	2,131.3	0.00	0.00	0.00
14,900.0	90.00	179.59	12,728.0	-2,230.6	108.9	2,231.3	0.00	0.00	0.00
15,000.0	90.00	179.59	12,728.0	-2,330.6	109.7	2,331.3	0.00	0.00	0.00
15,100.0	90.00	179.59	12,728.0	-2,430.6	110.4	2,431.3	0.00	0.00	0.00
15,200.0	90.00	179.59	12,728.0	-2,530.6	111.1	2,531.3	0.00	0.00	0.00
15,300.0	90.00	179.59	12,728.0	-2,630.6	111.8	2,631.3	0.00	0.00	0.00
15,400.0	90.00	179.59	12,728.0	-2,730.6	112.5	2,731.3	0.00	0.00	0.00
15,500.0	90.00	179.59	12,728.0	-2,830.6	113.2	2,831.3	0.00	0.00	0.00
15,600.0	90.00	179.59	12,728.0	-2,930.6	114.0	2,931.3	0.00	0.00	0.00
15,700.0	90.00	179.59	12,728.0	-3,030.6	114.7	3,031.3	0.00	0.00	0.00
15,800.0	90.00	179.59	12,728.0	-3,130.6	115.4	3,131.3	0.00	0.00	0.00
15,900.0	90.00	179.59	12,728.0	-3,230.6	116.1	3,231.3	0.00	0.00	0.00
16,000.0	90.00	179.59	12,728.0	-3,330.6	116.8	3,331.3	0.00	0.00	0.00
16,100.0	90.00	179.59	12,728.0	-3,430.6	117.6	3,431.3	0.00	0.00	0.00
16,200.0	90.00	179.59	12,728.0	-3,530.6	118.3	3,531.3	0.00	0.00	0.00
16,300.0	90.00	179.59	12,728.0	-3,630.6	119.0	3,631.3	0.00	0.00	0.00
16,400.0	90.00	179.59	12,728.0	-3,730.6	119.7	3,731.3	0.00	0.00	0.00
16,500.0	90.00	179.59	12,728.0	-3,830.6	120.4	3,831.3	0.00	0.00	0.00
16,600.0	90.00	179.59	12,728.0	-3,930.6	121.2	3,931.3	0.00	0.00	0.00
16,700.0	90.00	179.59	12,728.0	-4,030.6	121.9	4,031.3	0.00	0.00	0.00
16,800.0	90.00	179.59	12,728.0	-4,130.6	122.6	4,131.3	0.00	0.00	0.00
16,900.0	90.00	179.59	12,728.0	-4,230.6	123.3	4,231.3	0.00	0.00	0.00
17,000.0	90.00	179.59	12,728.0	-4,330.6	124.0	4,331.3	0.00	0.00	0.00
17,100.0	90.00	179.59	12,728.0	-4,430.6	124.7	4,431.3	0.00	0.00	0.00
17,135.4	90.00	179.59	12,728.0	-4,466.0	125.0	4,466.8	0.00	0.00	0.00
17,150.0	90.00	181.34	12,728.0	-4,480.6	124.9	4,481.3	12.00	0.00	12.00
17,175.0	90.00	184.34	12,728.0	-4,505.5	123.6	4,506.3	12.00	0.00	12.00
17,200.0	90.00	187.34	12,728.0	-4,530.4	121.1	4,531.1	12.00	0.00	12.00
17,225.0	90.00	190.34	12,728.0	-4,555.1	117.3	4,555.8	12.00	0.00	12.00
17,250.0	90.00	193.34	12,728.0	-4,579.6	112.1	4,580.2	12.00	0.00	12.00
17,275.0	90.00	196.34	12,728.0	-4,603.7	105.7	4,604.4	12.00	0.00	12.00
17,300.0	90.00	199.34	12,728.0	-4,627.5	98.1	4,628.1	12.00	0.00	12.00
17,325.0	90.00	202.34	12,728.0	-4,650.9	89.2	4,651.4	12.00	0.00	12.00
17,350.0	90.00	205.34	12,728.0	-4,673.7	79.1	4,674.2	12.00	0.00	12.00
17,375.0	90.00	208.34	12,728.0	-4,696.0	67.8	4,696.4	12.00	0.00	12.00
17,400.0	90.00	211.34	12,728.0	-4,717.7	55.4	4,718.0	12.00	0.00	12.00
17,425.0	90.00	214.34	12,728.0	-4,738.7	41.8	4,738.9	12.00	0.00	12.00
17,450.0	90.00	217.34	12,728.0	-4,759.0	27.2	4,759.1	12.00	0.00	12.00
17,475.0	90.00	220.34	12,728.0	-4,778.5	11.5	4,778.4	12.00	0.00	12.00
17,500.0	90.00	223.34	12,728.0	-4,797.1	-5.2	4,796.9	12.00	0.00	12.00
17,525.0	90.00	226.34	12,728.0	-4,814.8	-22.8	4,814.5	12.00	0.00	12.00
17,550.0	90.00	229.34	12,728.0	-4,831.6	-41.3	4,831.2	12.00	0.00	12.00
17,575.0	90.00	232.34	12,728.0	-4,847.4	-60.7	4,846.8	12.00	0.00	12.00
17,600.0	90.00	235.34	12,728.0	-4,862.1	-80.9	4,861.4	12.00	0.00	12.00
17,625.0	90.00	238.34	12,728.0	-4,875.8	-101.8	4,875.0	12.00	0.00	12.00
17,650.0	90.00	241.34	12,728.0	-4,888.4	-123.4	4,887.4	12.00	0.00	12.00
17,675.0	90.00	244.34	12,728.0	-4,899.8	-145.7	4,898.6	12.00	0.00	12.00
17,700.0	90.00	247.34	12,728.0	-4,910.0	-168.5	4,908.7	12.00	0.00	12.00
17,725.0	90.00	250.34	12,728.0	-4,919.0	-191.8	4,917.6	12.00	0.00	12.00
17,750.0	90.00	253.34	12,728.0	-4,926.8	-215.5	4,925.2	12.00	0.00	12.00
17,775.0	90.00	256.34	12,728.0	-4,933.4	-239.7	4,931.5	12.00	0.00	12.00
17,800.0	90.00	259.34	12,728.0	-4,938.6	-264.1	4,936.6	12.00	0.00	12.00
17,825.0	90.00	262.34	12,728.0	-4,942.6	-288.8	4,940.4	12.00	0.00	12.00

Planning Report

Database:	EDT_18	**Local Co-ordinate Reference:**	Well #741H
Company:	Midland	**TVD Reference:**	kb = 26' @ 3303.0usft
Project:	Lea County, NM (NAD 83 NME)	**MD Reference:**	kb = 26' @ 3303.0usft
Site:	Braswell 16 State	**North Reference:**	Grid
Well:	#741H	**Survey Calculation Method:**	Minimum Curvature
Wellbore:	OH		
Design:	Plan #0.1 RT		

Planned Survey

Measured Depth (usft)	Inclination (°)	Azimuth (°)	Vertical Depth (usft)	+N/-S (usft)	+E/-W (usft)	Vertical Section (usft)	Dogleg Rate (°/100usft)	Build Rate (°/100usft)	Turn Rate (°/100usft)
17,850.0	90.00	265.34	12,728.0	-4,945.3	-313.6	4,942.9	12.00	0.00	12.00
17,875.0	90.00	268.34	12,728.0	-4,946.7	-338.6	4,944.1	12.00	0.00	12.00
17,887.6	90.00	269.85	12,728.0	-4,946.9	-351.2	4,944.2	12.01	0.00	12.01
17,900.0	90.00	269.85	12,728.0	-4,946.9	-363.6	4,944.2	0.00	0.00	0.00
18,000.0	90.00	269.85	12,728.0	-4,947.2	-463.6	4,943.7	0.00	0.00	0.00
18,100.0	90.00	269.85	12,728.0	-4,947.4	-563.6	4,943.3	0.00	0.00	0.00
18,200.0	90.00	269.85	12,728.0	-4,947.7	-663.6	4,942.8	0.00	0.00	0.00
18,252.7	90.00	269.85	12,728.0	-4,947.8	-716.3	4,942.6	0.00	0.00	0.00
18,275.0	90.00	272.52	12,728.0	-4,947.4	-738.6	4,942.0	12.00	0.00	12.00
18,300.0	90.00	275.52	12,728.0	-4,945.6	-763.5	4,940.0	12.00	0.00	12.00
18,325.0	90.00	278.52	12,728.0	-4,942.6	-788.3	4,936.8	12.00	0.00	12.00
18,350.0	90.00	281.52	12,728.0	-4,938.2	-812.9	4,932.3	12.00	0.00	12.00
18,375.0	90.00	284.52	12,728.0	-4,932.6	-837.3	4,926.5	12.00	0.00	12.00
18,400.0	90.00	287.52	12,728.0	-4,925.7	-861.3	4,919.4	12.00	0.00	12.00
18,425.0	90.00	290.52	12,728.0	-4,917.5	-884.9	4,911.1	12.00	0.00	12.00
18,450.0	90.00	293.52	12,728.0	-4,908.2	-908.1	4,901.5	12.00	0.00	12.00
18,475.0	90.00	296.52	12,728.0	-4,897.6	-930.8	4,890.8	12.00	0.00	12.00
18,500.0	90.00	299.52	12,728.0	-4,885.8	-952.8	4,878.9	12.00	0.00	12.00
18,525.0	90.00	302.52	12,728.0	-4,873.0	-974.3	4,865.9	12.00	0.00	12.00
18,550.0	90.00	305.52	12,728.0	-4,859.0	-995.0	4,851.7	12.00	0.00	12.00
18,575.0	90.00	308.52	12,728.0	-4,843.9	-1,014.9	4,836.5	12.00	0.00	12.00
18,600.0	90.00	311.52	12,728.0	-4,827.8	-1,034.1	4,820.3	12.00	0.00	12.00
18,625.0	90.00	314.52	12,728.0	-4,810.8	-1,052.3	4,803.1	12.00	0.00	12.00
18,650.0	90.00	317.52	12,728.0	-4,792.8	-1,069.7	4,785.0	12.00	0.00	12.00
18,675.0	90.00	320.52	12,728.0	-4,773.9	-1,086.1	4,766.0	12.00	0.00	12.00
18,700.0	90.00	323.52	12,728.0	-4,754.2	-1,101.5	4,746.2	12.00	0.00	12.00
18,725.0	90.00	326.52	12,728.0	-4,733.7	-1,115.8	4,725.6	12.00	0.00	12.00
18,750.0	90.00	329.52	12,728.0	-4,712.5	-1,129.0	4,704.3	12.00	0.00	12.00
18,775.0	90.00	332.52	12,728.0	-4,690.7	-1,141.2	4,682.4	12.00	0.00	12.00
18,800.0	90.00	335.52	12,728.0	-4,668.2	-1,152.1	4,659.8	12.00	0.00	12.00
18,825.0	90.00	338.52	12,728.0	-4,645.2	-1,161.9	4,636.7	12.00	0.00	12.00
18,850.0	90.00	341.52	12,728.0	-4,621.7	-1,170.4	4,613.2	12.00	0.00	12.00
18,875.0	90.00	344.52	12,728.0	-4,597.8	-1,177.7	4,589.2	12.00	0.00	12.00
18,900.0	90.00	347.52	12,728.0	-4,573.5	-1,183.7	4,564.9	12.00	0.00	12.00
18,925.0	90.00	350.52	12,728.0	-4,549.0	-1,188.5	4,540.4	12.00	0.00	12.00
18,950.0	90.00	353.52	12,728.0	-4,524.2	-1,192.0	4,515.6	12.00	0.00	12.00
18,975.0	90.00	356.52	12,728.0	-4,499.3	-1,194.1	4,490.7	12.00	0.00	12.00
19,000.3	90.00	359.56	12,728.0	-4,474.0	-1,195.0	4,465.3	12.00	0.00	12.00
19,100.0	90.00	359.56	12,728.0	-4,374.3	-1,195.8	4,365.7	0.00	0.00	0.00
19,200.0	90.00	359.56	12,728.0	-4,274.3	-1,196.5	4,265.7	0.00	0.00	0.00
19,300.0	90.00	359.56	12,728.0	-4,174.3	-1,197.3	4,165.7	0.00	0.00	0.00
19,400.0	90.00	359.56	12,728.0	-4,074.4	-1,198.0	4,065.7	0.00	0.00	0.00
19,500.0	90.00	359.56	12,728.0	-3,974.4	-1,198.8	3,965.7	0.00	0.00	0.00
19,600.0	90.00	359.56	12,728.0	-3,874.4	-1,199.6	3,865.7	0.00	0.00	0.00
19,700.0	90.00	359.56	12,728.0	-3,774.4	-1,200.3	3,765.7	0.00	0.00	0.00
19,800.0	90.00	359.56	12,728.0	-3,674.4	-1,201.1	3,665.7	0.00	0.00	0.00
19,900.0	90.00	359.56	12,728.0	-3,574.4	-1,201.8	3,565.7	0.00	0.00	0.00
20,000.0	90.00	359.56	12,728.0	-3,474.4	-1,202.6	3,465.7	0.00	0.00	0.00
20,100.0	90.00	359.56	12,728.0	-3,374.4	-1,203.4	3,365.7	0.00	0.00	0.00
20,200.0	90.00	359.56	12,728.0	-3,274.4	-1,204.1	3,265.7	0.00	0.00	0.00
20,300.0	90.00	359.56	12,728.0	-3,174.4	-1,204.9	3,165.7	0.00	0.00	0.00
20,400.0	90.00	359.56	12,728.0	-3,074.4	-1,205.6	3,065.7	0.00	0.00	0.00
20,500.0	90.00	359.56	12,728.0	-2,974.4	-1,206.4	2,965.7	0.00	0.00	0.00
20,600.0	90.00	359.56	12,728.0	-2,874.4	-1,207.2	2,865.7	0.00	0.00	0.00

Planning Report

Database:	EDT_18	**Local Co-ordinate Reference:**	Well #741H
Company:	Midland	**TVD Reference:**	kb = 26' @ 3303.0usft
Project:	Lea County, NM (NAD 83 NME)	**MD Reference:**	kb = 26' @ 3303.0usft
Site:	Braswell 16 State	**North Reference:**	Grid
Well:	#741H	**Survey Calculation Method:**	Minimum Curvature
Wellbore:	OH		
Design:	Plan #0.1 RT		

Planned Survey

Measured Depth (usft)	Inclination (°)	Azimuth (°)	Vertical Depth (usft)	+N/-S (usft)	+E/-W (usft)	Vertical Section (usft)	Dogleg Rate (°/100usft)	Build Rate (°/100usft)	Turn Rate (°/100usft)
20,700.0	90.00	359.56	12,728.0	-2,774.4	-1,207.9	2,765.7	0.00	0.00	0.00
20,800.0	90.00	359.56	12,728.0	-2,674.4	-1,208.7	2,665.7	0.00	0.00	0.00
20,900.0	90.00	359.56	12,728.0	-2,574.4	-1,209.4	2,565.7	0.00	0.00	0.00
21,000.0	90.00	359.56	12,728.0	-2,474.4	-1,210.2	2,465.7	0.00	0.00	0.00
21,100.0	90.00	359.56	12,728.0	-2,374.4	-1,211.0	2,365.7	0.00	0.00	0.00
21,200.0	90.00	359.56	12,728.0	-2,274.4	-1,211.7	2,265.7	0.00	0.00	0.00
21,300.0	90.00	359.56	12,728.0	-2,174.4	-1,212.5	2,165.7	0.00	0.00	0.00
21,400.0	90.00	359.56	12,728.0	-2,074.4	-1,213.2	2,065.7	0.00	0.00	0.00
21,500.0	90.00	359.56	12,728.0	-1,974.4	-1,214.0	1,965.7	0.00	0.00	0.00
21,600.0	90.00	359.56	12,728.0	-1,874.4	-1,214.8	1,865.7	0.00	0.00	0.00
21,700.0	90.00	359.56	12,728.0	-1,774.4	-1,215.5	1,765.7	0.00	0.00	0.00
21,800.0	90.00	359.56	12,728.0	-1,674.4	-1,216.3	1,665.7	0.00	0.00	0.00
21,900.0	90.00	359.56	12,728.0	-1,574.4	-1,217.0	1,565.7	0.00	0.00	0.00
22,000.0	90.00	359.56	12,728.0	-1,474.4	-1,217.8	1,465.7	0.00	0.00	0.00
22,100.0	90.00	359.56	12,728.0	-1,374.4	-1,218.6	1,365.7	0.00	0.00	0.00
22,200.0	90.00	359.56	12,728.0	-1,274.4	-1,219.3	1,265.7	0.00	0.00	0.00
22,300.0	90.00	359.56	12,728.0	-1,174.4	-1,220.1	1,165.7	0.00	0.00	0.00
22,400.0	90.00	359.56	12,728.0	-1,074.4	-1,220.8	1,065.7	0.00	0.00	0.00
22,500.0	90.00	359.56	12,728.0	-974.4	-1,221.6	965.7	0.00	0.00	0.00
22,600.0	90.00	359.56	12,728.0	-874.4	-1,222.4	865.7	0.00	0.00	0.00
22,700.0	90.00	359.56	12,728.0	-774.4	-1,223.1	765.7	0.00	0.00	0.00
22,800.0	90.00	359.56	12,728.0	-674.5	-1,223.9	665.7	0.00	0.00	0.00
22,900.0	90.00	359.56	12,728.0	-574.5	-1,224.7	565.7	0.00	0.00	0.00
23,000.0	90.00	359.56	12,728.0	-474.5	-1,225.4	465.7	0.00	0.00	0.00
23,100.0	90.00	359.56	12,728.0	-374.5	-1,226.2	365.7	0.00	0.00	0.00
23,200.0	90.00	359.56	12,728.0	-274.5	-1,226.9	265.7	0.00	0.00	0.00
23,300.0	90.00	359.56	12,728.0	-174.5	-1,227.7	165.7	0.00	0.00	0.00
23,400.0	90.00	359.56	12,728.0	-74.5	-1,228.5	65.7	0.00	0.00	0.00
23,500.0	90.00	359.56	12,728.0	25.5	-1,229.2	-34.3	0.00	0.00	0.00
23,603.5	90.00	359.56	12,728.0	129.0	-1,230.0	-137.8	0.00	0.00	0.00

Design Targets

Target Name - hit/miss target - Shape	Dip Angle (°)	Dip Dir. (°)	TVD (usft)	+N/-S (usft)	+E/-W (usft)	Northing (usft)	Easting (usft)	Latitude	Longitude
KOP(Braswell 16 State # - plan hits target center - Point	0.00	0.00	12,155.0	184.0	89.0	382,971.00	774,599.00	32° 3' 2.273 N	103° 34' 49.596 W
FTP(Braswell 16 State # - plan hits target center - Point	0.00	0.00	12,389.1	134.0	90.0	382,921.00	774,600.00	32° 3' 1.778 N	103° 34' 49.589 W
PBHL(Braswell 16 State - plan hits target center - Point	0.00	0.00	12,728.0	129.0	-1,230.0	382,916.00	773,280.00	32° 3' 1.819 N	103° 35' 4.926 W
PC 1(Braswell 16 State - plan hits target center - Point	0.00	0.00	12,728.0	-4,466.0	125.0	378,321.00	774,635.00	32° 2' 16.256 N	103° 34' 49.555 W
PC4(Braswell 16 State # - plan hits target center - Point	0.00	0.00	12,728.0	-4,474.0	-1,195.0	378,313.00	773,315.00	32° 2' 16.268 N	103° 35' 4.890 W

Planning Report

Database:	EDT_18	**Local Co-ordinate Reference:**	Well #741H
Company:	Midland	**TVD Reference:**	kb = 26' @ 3303.0usft
Project:	Lea County, NM (NAD 83 NME)	**MD Reference:**	kb = 26' @ 3303.0usft
Site:	Braswell 16 State	**North Reference:**	Grid
Well:	#741H	**Survey Calculation Method:**	Minimum Curvature
Wellbore:	OH		
Design:	Plan #0.1 RT		

Braswell 16 State 741H API #: 30-025-*** Variances**

EOG respectfully requests the below variances to be applied to the above well:

- Variance is requested to waive the centralizer requirements for the intermediate casing in the intermediate hole. An expansion additive will be utilized, in the cement slurry, for the entire length of the intermediate interval to maximize cement bond and zonal isolation.
- Variance is also requested to waive the centralizer requirements for the production casing in the production hole. An expansion additive will be utilized, in the cement slurry, for the entire length of the production interval to maximize cement bond and zonal isolation.
- EOG requests a variance to set the intermediate casing shoe in the Bone Spring formation or the Wolfcamp formation, depending on depletion in the area and well conditions. EOG will monitor the well and ensure the well is static before casing operations begin.

- Variance is requested to use a co-flex line between the BOP and choke manifold (instead of using a 4" OD steel line).- Variance is requested to use a 5,000 psi annular BOP with the 10,000 psi BOP stack.
- EOG Resources requests the option to contract a Surface Rig to drill, set surface casing, and Cement on the subject well. After WOC 8 hours or 500 psi compressive strength (whichever is greater), the Surface Rig will move off so the wellhead can be installed. A welder will cut the casing to the proper height and weld on the wellhead (both "A" and "B" sections). The weld will be tested to 1,500 psi. All valves will be closed and a wellhead cap will be installed (diagram attached). If the timing between rigs is such that EOG Resources would not be able to preset the surface, the Primary Rig will MIRU and drill the well in its entirety per the APD.

EOG requests the additional variance(s) in the attached document(s):

- EOG BLM Variance 2a - Intermediate Bradenhead Cement
- EOG BLM Variance 2b - Bonespring/Wolfcamp Intermediate Casing Setpoint
- EOG BLM Variance 3a_b - BOP Break-test and Offline Intermediate Cement
- EOG BLM Variance 3d - Production Offline Cement

eog resources

Lea County, NM (NAD 83 NME)

Braswell 16 State #741H

Plan #0.1 RT

Azimuths to Grid North
True North: -0.40°
Magnetic North: 5.73°

Magnetic Field
Strength: 46759.3nT
Dip Angle: 59.55°
Date: 10/19/2026
Model: IGRF2025

To convert a Magnetic Direction to a Grid Direction, Add 5.73°
To convert a Magnetic Direction to a True Direction, Add 6.13° East
To convert a True Direction to a Grid Direction, Subtract 0.40°

PROJECT DETAILS: Lea County, NM (NAD 83 NME)

Geodetic System:	US State Plane 1983
Datum:	North American Datum 1983
Ellipsoid:	GRS 1980
Zone:	New Mexico Eastern Zone
System Datum:	Mean Sea Level

WELL DETAILS: #741H

3277.0
kb = 26' @ 3303.0usft

Northing	Easting	Latittude	Longitude
382787.00	774510.00	32° 3' 0.458 N	103° 34' 50.645 W

SECTION DETAILS

Sec	MD	Inc	Azi	TVD	+N/-S	+E/-W	DIeg	TFace	VSect	Target
1	0.0	0.00	0.00	0.0	0.0	0.0	0.00	0.00	0.0	
2	1063.0	0.00	0.00	1063.0	0.0	0.0	0.00	0.00	0.0	
3	1154.7	1.83	25.81	1154.7	1.3	0.6	2.00	25.81	-1.3	
4	7448.5	1.83	25.81	7445.3	182.7	88.4	0.00	0.00	-182.0	
5	7540.3	0.00	0.00	7537.0	184.0	89.0	2.00	180.00	-183.4	
6	12158.3	0.00	0.00	12155.0	184.0	89.0	0.00	0.00	-183.4	KOP(Braswell 16 State #741H)
7	12399.4	24.12	178.85	12389.1	134.0	90.0	10.00	178.85	-133.4	FTP(Braswell 16 State #741H)
8	13058.3	90.00	179.59	12728.0	-388.9	95.7	10.00	0.80	389.6	
9	17135.4	90.00	179.59	12728.0	-4466.0	125.0	0.00	0.00	4466.8	PC 1(Braswell 16 State #741H)
10	17887.6	90.00	269.85	12728.0	-4946.9	-351.2	12.00	90.00	4944.2	
11	18252.7	90.00	269.85	12728.0	-4947.8	-716.3	0.00	0.00	4942.6	
12	19000.3	90.00	359.56	12728.0	-4474.0	-1195.0	12.00	90.00	4465.3	PC4(Braswell 16 State #741H)
13	23603.5	90.00	359.56	12728.0	129.0	-1230.0	0.00	0.00	-137.8	PBHL(Braswell 16 State #741H)

WELLBORE TARGET DETAILS (MAP CO-ORDINATES)

Name	TVD	+N/-S	+E/-W	Northing	Easting
KOP(Braswell 16 State #741H)	12155.0	184.0	89.0	382971.00	774599.00
FTP(Braswell 16 State #741H)	12389.1	134.0	90.0	382921.00	774600.00
PC 1(Braswell 16 State #741H)	12728.0	-4466.0	125.0	378321.00	774635.00
PC4(Braswell 16 State #741H)	12728.0	-4474.0	-1195.0	378313.00	773315.00
PBHL(Braswell 16 State #741H)	12728.0	129.0	-1230.0	382916.00	773280.00

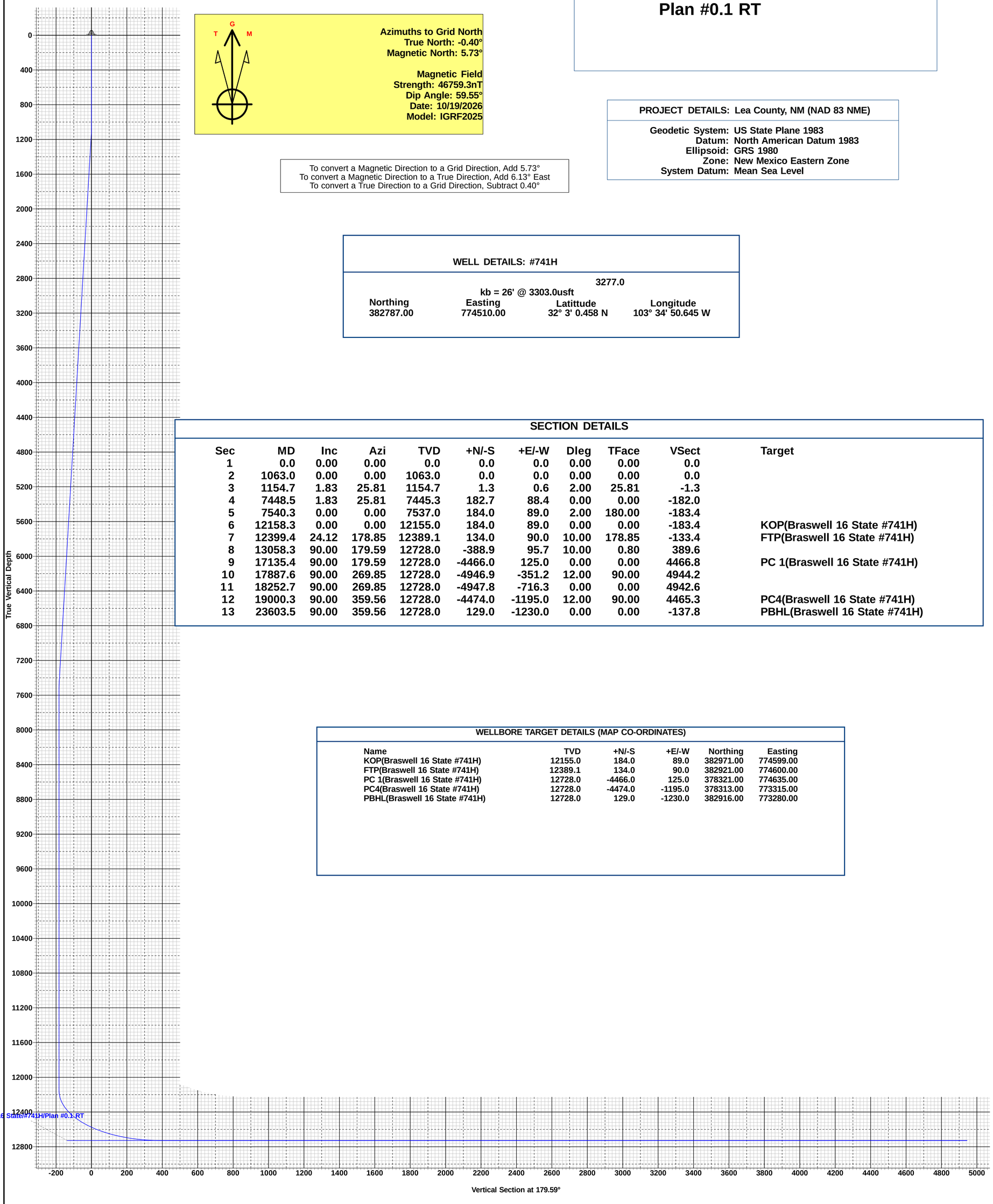

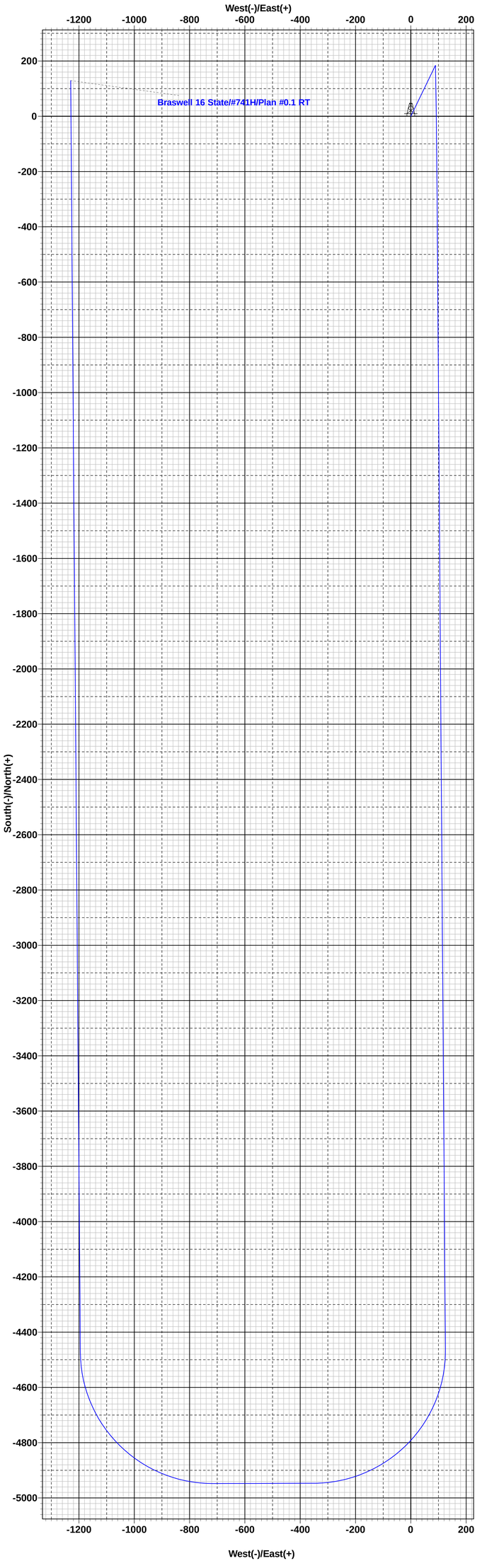

Lea County, NM (NAD 83 NME)
Braswell 16 State
#741H
OH
Plan #0.1 RT
16:04, October 19 2026

State of New Mexico
Energy, Minerals and Natural Resources Department

Submit Electronically
Via E-permitting

Oil Conservation Division
1220 South St. Francis Dr.
Santa Fe, NM 87505

NATURAL GAS MANAGEMENT PLAN

This Natural Gas Management Plan must be submitted with each Application for Permit to Drill (APD) for a new or recompleted well.

Section 1 – Plan Description
Effective May 25, 2021

I. Operator: ___EOG Resources, Inc._____ **OGRID:** _____7377_____ **Date:** 3/09/2026

II. Type: ☒ Original ☐ Amendment due to ☐ 19.15.27.9.D(6)(a) NMAC ☐ 19.15.27.9.D(6)(b) NMAC ☐ Other.

If Other, please describe: _____

III. Well(s): Provide the following information for each new or recompleted well or set of wells proposed to be drilled or proposed to be recompleted from a single well pad or connected to a central delivery point.

Well Name	API	ULSTR	Footages	Anticipated Oil BBL/D	Anticipated Gas MCF/D	Anticipated Produced Water BBL/D
BRASWELL 16 STATE 741H		C-16-26S-33E	234' FNL & 1559' FWL	+/- 1000	+/- 3500	+/- 3000

IV. Central Delivery Point Name: ___BRASWELL 16 STATE CTB_____ [See 19.15.27.9(D)(1) NMAC]

V. Anticipated Schedule: Provide the following information for each new or recompleted well or set of wells proposed to be drilled or proposed to be recompleted from a single well pad or connected to a central delivery point.

Well Name	API	Spud Date	TD Reached Date	Completion Commencement Date	Initial Flow Back Date	First Production Date
BRASWELL 16 STATE 741H		11/15/26	12/15/26	02/03/27	04/03/27	05/17/27

VI. Separation Equipment: ☒ Attach a complete description of how Operator will size separation equipment to optimize gas capture.

VII. Operational Practices: ☒ Attach a complete description of the actions Operator will take to comply with the requirements of Subsection A through F of 19.15.27.8 NMAC.

VIII. Best Management Practices: ☒ Attach a complete description of Operator's best management practices to minimize venting during active and planned maintenance.

Section 2 – Enhanced Plan
EFFECTIVE APRIL 1, 2022

Beginning April 1, 2022, an operator that is not in compliance with its statewide natural gas capture requirement for the applicable reporting area must complete this section.

☒ Operator certifies that it is not required to complete this section because Operator is in compliance with its statewide natural gas capture requirement for the applicable reporting area.

IX. Anticipated Natural Gas Production:

Well	API	Anticipated Average Natural Gas Rate MCF/D	Anticipated Volume of Natural Gas for the First Year MCF

X. Natural Gas Gathering System (NGGS):

Operator	System	ULSTR of Tie-in	Anticipated Gathering Start Date	Available Maximum Daily Capacity of System Segment Tie-in

XI. Map. ☐ Attach an accurate and legible map depicting the location of the well(s), the anticipated pipeline route(s) connecting the production operations to the existing or planned interconnect of the natural gas gathering system(s), and the maximum daily capacity of the segment or portion of the natural gas gathering system(s) to which the well(s) will be connected.

XII. Line Capacity. The natural gas gathering system ☐ will ☐ will not have capacity to gather 100% of the anticipated natural gas production volume from the well prior to the date of first production.

XIII. Line Pressure. Operator ☐ does ☐ does not anticipate that its existing well(s) connected to the same segment, or portion, of the natural gas gathering system(s) described above will continue to meet anticipated increases in line pressure caused by the new well(s).

☐ Attach Operator's plan to manage production in response to the increased line pressure.

XIV. Confidentiality: ☐ Operator asserts confidentiality pursuant to Section 71-2-8 NMSA 1978 for the information provided in Section 2 as provided in Paragraph (2) of Subsection D of 19.15.27.9 NMAC, and attaches a full description of the specific information for which confidentiality is asserted and the basis for such assertion.

Section 3 - Certifications

Effective May 25, 2021

Operator certifies that, after reasonable inquiry and based on the available information at the time of submittal:

☒ Operator will be able to connect the well(s) to a natural gas gathering system in the general area with sufficient capacity to transport one hundred percent of the anticipated volume of natural gas produced from the well(s) commencing on the date of first production, taking into account the current and anticipated volumes of produced natural gas from other wells connected to the pipeline gathering system; or

☐ Operator will not be able to connect to a natural gas gathering system in the general area with sufficient capacity to transport one hundred percent of the anticipated volume of natural gas produced from the well(s) commencing on the date of first production, taking into account the current and anticipated volumes of produced natural gas from other wells connected to the pipeline gathering system. ***If Operator checks this box, Operator will select one of the following:***

Well Shut-In. ☐ Operator will shut-in and not produce the well until it submits the certification required by Paragraph (4) of Subsection D of 19.15.27.9 NMAC; or

Venting and Flaring Plan. ☐ Operator has attached a venting and flaring plan that evaluates and selects one or more of the potential alternative beneficial uses for the natural gas until a natural gas gathering system is available, including:

- **(a)** power generation on lease;
- **(b)** power generation for grid;
- **(c)** compression on lease;
- **(d)** liquids removal on lease;
- **(e)** reinjection for underground storage;
- **(f)** reinjection for temporary storage;
- **(g)** reinjection for enhanced oil recovery;
- **(h)** fuel cell production; and
- **(i)** other alternative beneficial uses approved by the division.

Section 4 - Notices

1. If, at any time after Operator submits this Natural Gas Management Plan and before the well is spud:

(a) Operator becomes aware that the natural gas gathering system it planned to connect the well(s) to has become unavailable or will not have capacity to transport one hundred percent of the production from the well(s), no later than 20 days after becoming aware of such information, Operator shall submit for OCD's approval a new or revised venting and flaring plan containing the information specified in Paragraph (5) of Subsection D of 19.15.27.9 NMAC; or

(b) Operator becomes aware that it has, cumulatively for the year, become out of compliance with its baseline natural gas capture rate or natural gas capture requirement, no later than 20 days after becoming aware of such information, Operator shall submit for OCD's approval a new or revised Natural Gas Management Plan for each well it plans to spud during the next 90 days containing the information specified in Paragraph (2) of Subsection D of 19.15.27.9 NMAC, and shall file an update for each Natural Gas Management Plan until Operator is back in compliance with its baseline natural gas capture rate or natural gas capture requirement.

2. OCD may deny or conditionally approve an APD if Operator does not make a certification, fails to submit an adequate venting and flaring plan which includes alternative beneficial uses for the anticipated volume of natural gas produced, or if OCD determines that Operator will not have adequate natural gas takeaway capacity at the time a well will be spud.

I certify that, after reasonable inquiry, the statements in and attached to this Natural Gas Management Plan are true and correct to the best of my knowledge and acknowledge that a false statement may be subject to civil and criminal penalties under the Oil and Gas Act.

Signature:
Printed Name: Kayla McConnell
Title: Regulatory Specialist
E-mail Address: Kayla_McConnell@eogresources.com
Date: 10/22/2027
Phone: (432) 214-9797

OIL CONSERVATION DIVISION **(Only applicable when submitted as a standalone form)**
Approved By:
Title:
Approval Date:
Conditions of Approval:

Natural Gas Management Plan
Items VI-VIII

VI. Separation Equipment: Attach a complete description of how Operator will size separation equipment to optimize gas capture.

- Separation equipment will be sized to provide adequate separation for anticipated rates.
- Adequate separation relates to retention time for Liquid – Liquid separation and velocity for Gas-Liquid separation.
- Collection systems are appropriately sized to handle facility production rates on all (3) phases.
- Ancillary equipment and metering is selected to be serviced without flow interruptions or the need to release gas from the well.

VII. Operational Practices: Attach a complete description of the actions Operator will take to comply with the requirements of Subsection A through F 19.15.27.8 NMAC.

Drilling Operations

- All flare stacks will be properly sized. The flare stacks will be located at a minimum 100' from the nearest surface hole location on the pad.
- All natural gas produced during drilling operations will be flared, unless there is an equipment malfunction and/or to avoid risk of an immediate and substantial adverse impact on safety and the environment, at which point the gas will be vented.

Completions/Recompletions Operations

- New wells will not be flowed back until they are connected to a properly sized gathering system.
- The facility will be built/sized for maximum anticipated flowrates and pressures to minimize waste.
- For flowback operations, multiple stages of separation will be used as well as excess VRU and blowers to make sure waste is minimized off the storage tanks and facility.
- During initial flowback, the well stream will be routed to separation equipment.
- At an existing facility, when necessary, post separation natural gas will be flared until it meets pipeline specifications, at which point it will be turned into a collection system.
- At a new facility, post separation natural gas will be vented until storage tanks can safely function, at which point it will be flared until it meets pipeline spec.

Production Operations

- Weekly AVOs will be performed on all facilities.
- All flares will be equipped with auto-ignition systems and continuous pilot operations.
- After a well is stabilized from liquid unloading, the well will be turned back into the collection system.
- All plunger lift systems will be optimized to limit the amount of waste.
- All tanks will have automatic gauging equipment installed.
- Leaking thief hatches found during AVOs will be cleaned and properly re-sealed.

Performance Standards

- Production equipment will be designed to handle maximum anticipated rates and pressure.
- All flared gas will be combusted in a flare stack that is properly sized and designed to ensure proper combustion.
- Weekly AVOs will be performed on all wells and facilities that produce more than 60 Mcfd.

Measurement & Estimation

- All volume that is flared and vented that is not measured will be estimated.
- All measurement equipment for flared volumes will conform to API 14.10.
- No meter bypasses with be installed.

- When metering is not practical due to low pressure/low rate, the vented or flared volume will be estimated.

VIII. Best Management Practices: Attach a complete description of Operator's best management practices to minimize venting during active and planned maintenance.

- During downhole well maintenance, EOG will use best management practices to vent as minimally as possible.
- Prior to the commencement of any maintenance, the tank or vessel will be isolated from the rest of the facilities.
- All valves upstream of the equipment will be closed and isolated.
- After equipment has been isolated, the equipment will be blown down to as low a pressure as possible into the collection system.
- If the equipment being maintained cannot be relieved into the collection system, it shall be released to a tank where the vapor can either be captured or combusted if possible.
- After downhole well maintenance, natural gas will be flared until it reaches pipeline specification.