Form 3160-3
(October 2024)

FORM APPROVED
OMB No. 1004-0220
Expires: October 31, 2027

UNITED STATES
DEPARTMENT OF THE INTERIOR
BUREAU OF LAND MANAGEMENT

APPLICATION FOR PERMIT TO DRILL OR REENTER

5. Lease Serial No.: NMNM85937

6. If Indian, Allotee or Tribe Name:

1a. Type of work: ☑ DRILL ☐ REENTER

1b. Type of Well: ☑ Oil Well ☐ Gas Well ☐ Other

1c. Type of Completion: ☐ Hydraulic Fracturing ☐ Single Zone ☑ Multiple Zone

7. If Unit or CA Agreement, Name and No.:

8. Lease Name and Well No.: NEVER BETTER 14 FED COM 723H

2. Name of Operator: EOG RESOURCES INCORPORATED

9. API Well No.: 30-025-57111

3a. Address: 1111 BAGBY SKY LOBBY 2, HOUSTON, TX 77002

3b. Phone No. *(include area code)*: (713) 651-7000

10. Field and Pool, or Exploratory: WC-025 G-09 S233216K/UPPER WOLFC

4. Location of Well *(Report location clearly and in accordance with any State requirements.*)*

At surface: TR D / 549 FNL / 1167 FWL / LAT 32.397522 / LONG -103.650228

At proposed prod. zone: TR N / 100 FSL / 1980 FWL / LAT 32.370274 / LONG -103.647587

11. Sec., T. R. M. or Blk. and Survey or Area: SEC 14/T22S/R32E/NMP

14. Distance in miles and direction from nearest town or post office*

12. County or Parish: LEA

13. State: NM

15. Distance from proposed* location to nearest property or lease line, ft. (Also to nearest drig. unit line, if any): 100 feet

16. No of acres in lease: 800

17. Spacing Unit dedicated to this well: 1280.0

18. Distance from proposed location* to nearest well, drilling, completed, applied for, on this lease, ft.: 15 feet

19. Proposed Depth: 12270 feet / 22566 feet

20. BLM/BIA Bond No. in file: FED: NM2308

21. Elevations (Show whether DF, KDB, RT, GL, etc.): 3753 feet

22. Approximate date work will start*: 01/25/2025

23. Estimated duration: 25 days

24. Attachments

The following, completed in accordance with the requirements of Onshore Oil and Gas Order No. 1, and the Hydraulic Fracturing rule per 43 CFR 3162.3-3 (as applicable)

1. Well plat certified by a registered surveyor.
2. A Drilling Plan.
3. A Surface Use Plan (if the location is on National Forest System Lands, the SUPO must be filed with the appropriate Forest Service Office).
4. Bond to cover the operations unless covered by an existing bond on file (see Item 20 above).
5. Operator certification.
6. Such other site specific information and/or plans as may be requested by the BLM.

25. Signature	Name *(Printed/Typed)*	Date
(Electronic Submission)	SHEA BAILEY / Ph: (713) 651-7000	05/08/2024

Title: Regulatory Contractor

Approved by *(Signature)*	Name *(Printed/Typed)*	Date
(Electronic Submission)	CODY LAYTON / Ph: (575) 234-5959	03/05/2025

Title	Office
Assistant Field Manager Lands & Minerals	Carlsbad Field Office

Application approval does not warrant or certify that the applicant holds legal or equitable title to those rights in the subject lease which would entitle the applicant to conduct operations thereon.
Conditions of approval, if any, are attached.

Title 18 U.S.C. Section 1001 and Title 43 U.S.C. Section 1212, make it a crime for any person knowingly and willfully to make to any department or agency of the United States any false, fictitious or fraudulent statements or representations as to any matter within its jurisdiction.

APPROVED WITH CONDITIONS

(Continued on page 2)

*(Instructions on page 2)

Approval Date: 03/05/2025

INSTRUCTIONS

GENERAL: This form is designed for submitting proposals to perform certain well operations, as indicated on Federal and Indian lands and leases for action by appropriate Federal agencies, pursuant to applicable Federal laws and regulations. Any necessary special instructions concerning the use of this form and the number of copies to be submitted, particularly with regard to local, area, or regional procedures and practices, either are shown below or will be issued by, or may be obtained from local Federal offices.

ITEM I: If the proposal is to redrill to the same reservoir at a different subsurface location or to a new reservoir, use this form with appropriate notations. Consult applicable Federal regulations concerning subsequent work proposals or reports on the well.

ITEM 4: Locations on Federal or Indian land should be described in accordance with Federal requirements. Consult local Federal offices for specific instructions.

ITEM 14: Needed only when location of well cannot readily be found by road from the land or lease description. A plat, or plats, separate or on the reverse side, showing the roads to, and the surveyed location of, the wen, and any other required information, should be furnished when required by Federal agency offices.

ITEMS 15 AND 18: If well is to be, or has been directionany drilled, give distances for subsurface location of hole in any present or objective productive zone.

ITEM 22: Consult applicable Federal regulations, or appropriate officials, concerning approval of the proposal before operations are started.

ITEM 24: If the proposal will involve hydraulic fracturing operations, you must comply with 43 CFR 3162.3-3, including providing information about the protection of usable water. Operators should provide the best available information about all formations containing water and their depths. This information could include data and interpretation of resistivity logs run on nearby wells. Information may also be obtained from state or tribal regulatory agencies and from local BLM offices.

NOTICES

The Privacy Act of 1974 and regulation in 43 CFR 2.48(d) provide that you be furnished the following information in connection with information required by this application.

AUTHORITY: 30 U.S.C. 181 et seq., 25 U.S.C. 396; 43 CFR 3160

PRINCIPAL PURPOSES: The information will be used to: (1) process and evaluate your application for a permit to drill a new oil, gas, or service wen or to reenter a plugged and abandoned well; and (2) document, for administrative use, information for the management, disposal and use of National Resource Lands and resources including (a) analyzing your proposal to discover and extract the Federal or Indian resources encountered; (b) reviewing procedures and equipment and the projected impact on the land involved; and (c) evaluating the effects of the proposed operation on the surface and subsurface water and other environmental impacts.

ROUTINE USE: Information from the record and/or the record win be transferred to appropriate Federal, State, and local or foreign agencies, when relevant to civil, criminal or regulatory investigations or prosecution, in connection with congressional inquiries and for regulatory responsibilities.

EFFECT OF NOT PROVIDING INFORMATION: Filing of this application and disclosure of the information is mandatory only if you elect to initiate a drilling or reentry operation on an oil and gas lease.

The Paperwork Reduction Act of 1995 requires us to inform you that:
The BLM conects this information to anow evaluation of the technical, safety, and environmental factors involved with drilling for oil and/or gas on Federal and Indian oil and gas leases. This information will be used to analyze and approve applications. Response to this request is mandatory only if the operator elects to initiate drilling or reentry operations on an oil and gas lease. The BLM would like you to know that you do not have to respond to this or any other Federal agency-sponsored information collection unless it displays a currently valid OMB control number.

BURDEN HOURS STATEMENT: Public reporting burden for this form is estimated to average 8 hours per response, including the time for reviewing instructions, gathering and maintaining data, and completing and reviewing the form. Direct comments regarding the burden estimate or any other aspect of this form to U.S. Department of the Interior, Bureau of Land Management (1004-0137), Bureau Information Conection Clearance Officer (WO-630), 1849 C Street, N.W., Mail Stop 401 LS, Washington, D.C. 20240.

(Continued on page 3)

Additional Operator Remarks

Location of Well

0. SHL: TR D / 549 FNL / 1167 FWL / TWSP: 22S / RANGE: 32E / SECTION: 14 / LAT: 32.397522 / LONG: -103.650228 (TVD: 0 feet, MD: 0 feet)

PPP: TR C / 100 FNL / 1980 FWL / TWSP: 22S / RANGE: 32E / SECTION: 14 / LAT: 32.398771 / LONG: -103.647595 (TVD: 12005 feet, MD: 12096 feet)

PPP: TR K / 2640 FSL / 1980 FWL / TWSP: 22S / RANGE: 32E / SECTION: 14 / LAT: 32.391777 / LONG: -103.647594 (TVD: 12270 feet, MD: 14743 feet)

BHL: TR N / 100 FSL / 1980 FWL / TWSP: 22S / RANGE: 32E / SECTION: 23 / LAT: 32.370274 / LONG: -103.647587 (TVD: 12270 feet, MD: 22566 feet)

BLM Point of Contact

Name: MARIAH HUGHES
Title: Land Law Examiner
Phone: (575) 234-5972
Email: MHUGHES@BLM.GOV

C-102

Submit Electronically
Via OCD Permitting

State of New Mexico
Energy, Minerals & Natural Resources Department
OIL CONSERVATION DIVISION

Revised July 9, 2024

Submittal Type: ☒ Initial Submittal ☐ Amended Report ☐ As Drilled

Property Name and Well Number

NEVER BETTER 14 FED COM 723H

WELL LOCATION AND ACREAGE DEDICATION PLAT

API Number	Pool Code	Pool Name
30-025- 57111	98166	WC-025 G-09 S233216K, UPR WOLFCAMP

Property Code	Property Name	Well Number
336529	**NEVER BETTER 14 FED COM**	**723H**

OGRID No.	Operator Name	Ground Level Elevation
7377	EOG RESOURCES, INC.	3753'

Surface Owner: ☐ State ☐ Fee ☐ Tribal ☒ Federal
Mineral Owner: ☐ State ☐ Fee ☐ Tribal ☒ Federal

Surface Location

UL or Lot No.	Section	Township	Range	Lot	Feet from the N/S	Feet from the E/W	Latitude	Longitude	County
D	14	22 S	32 E		549 FNL	1167 FWL	N 32.397522°	W 103.650228°	LEA

Bottom Hole Location If Different From Surface

UL or Lot No.	Section	Township	Range	Lot	Feet from the N/S	Feet from the E/W	Latitude	Longitude	County
N	23	22 S	32 E		100 FSL	1980 FWL	N 32.370274°	W 103.647587°	LEA

Dedicated Acres	Infill or Defining Well	Defining Well API	Overlapping Spacing Unit (Y/N)	Consolidated Code
1280	INFILL	30-025-55488	N	C

Order Numbers: NSP ORDER 2233: COM PENDING
Well Setbacks are under Common Ownership: ☐ Yes ☐ No

Kick Off Point (KOP)

UL or lot no.	Section	Township	Range	Lot	Feet from the N/S	Feet from the E/W	Latitude	Longitude	County
C	14	22 S	32 E		50 FNL	1980 FWL	N 32.398908°	W 103.647595°	LEA

First Take Point (FTP)

UL or lot no.	Section	Township	Range	Lot	Feet from the N/S	Feet from the E/W	Latitude	Longitude	County
C	14	22 S	32 E		100 FNL	1980 FWL	N 32.398771°	W 103.647595°	LEA

Last Take Point (LTP)

UL or lot no.	Section	Township	Range	Lot	Feet from the N/S	Feet from the E/W	Latitude	Longitude	County
N	23	22 S	32 E		100 FSL	1980 FWL	N 32.370274°	W 103.647587°	LEA

Unitized Area or Area of Uniform Interest	Spacing Unity Type	Ground Floor Elevation
UNITIZED AREA	☒ Horizontal ☐ Vertical	3778'

OPERATOR CERTIFICATION

I hereby certify that the information contained herein is true and complete to the best of my knowledge and belief; and, if the well is a vertical or directional well, that this organization either owns a working interest or unleased mineral interest in the land including the proposed bottom hole location or has a right to drill this well at this location pursuant to a contract with an owner of a working interest or unleased mineral interest, or to a voluntary pooling agreement or a compulsory pooling order heretofore entered by the division.

If this well is a horizontal well, I further certify that this organization has received The consent of at least one lessee or owner of a working interest or unleased mineral interest in each tract (in the target pool or formation) in which any part of the well's completed interval will be located or obtained a compulsory pooling order from the division.

Signature Date

Print Name

E-mail Address

SURVEYORS CERTIFICATION

MITCHELL L. McDONALD NEW MEXICO 29821 PROFESSIONAL SURVEYOR 03/19/2025

Signature and Seal of Professional Surveyor Date

I hereby certify that the well location shown on this plat was plotted from field notes of actual surveys made by me or under my supervision, and that the same is true and correct to the best of my belief.

MITCHELL L. MCDONALD, N.M. P.L.S.

Certificate Number	Date of Survey
29821	MARCH 13, 2025

Note: No allowable will be assigned to this completion until all interests have been consolidated or a non-standard unit has been approved by the division.

EOG_B2301081PRODC\102_Package\C102_NVLED_Never_Better_14_Fed_Com_C102_WLE_723H_R3.dwg PHOMESLEY 3/17/2025 11:22 AM

C-102

Submit Electronically
Via OCD Permitting

State of New Mexico
Energy, Minerals & Natural Resources Department
OIL CONSERVATION DIVISION

Revised July 9, 2024

Submittal Type:
- [x] Initial Submittal
- [ ] Amended Report
- [ ] As Drilled

Property Name and Well Number

NEVER BETTER 14 FED COM 723H

SURFACE LOCATION
NEW MEXICO EAST
NAD 1983
X=752175' Y=509023'
LAT=N32.397522°
LONG=W103.650228°
NAD 1927
X=710993' Y=508963'
LAT=N32.397399°
LONG=W103.649742°
549' FNL 1167' FWL

KOP LOCATION
NEW MEXICO EAST
NAD 1983
X=752985' Y=509533'
LAT=N32.398908°
LONG=W103.647595°
NAD 1927
X=711802' Y=509472'
LAT=N32.398785°
LONG=W103.647108°
50' FNL 1980' FWL

FIRST TAKE POINT
NEW MEXICO EAST
NAD 1983
X=752985' Y=509483'
LAT=N32.398771°
LONG=W103.647595°
NAD 1927
X=711803' Y=509422'
LAT=N32.398648°
LONG=W103.647108°
100' FNL 1980' FWL

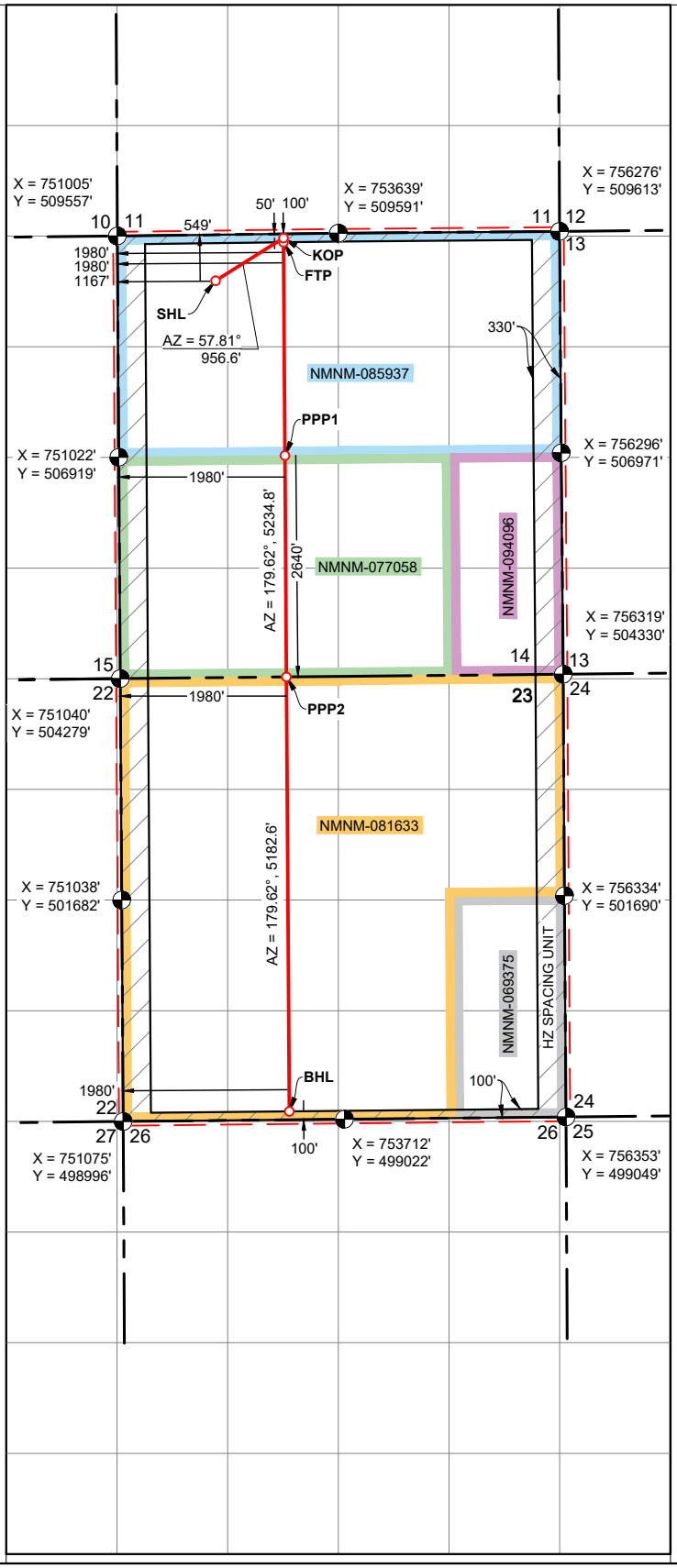

PROPOSED PENETRATION POINT 1
NEW MEXICO EAST
NAD 1983
X=753002' Y=506938'
LAT=N32.391777°
LONG=W103.647594°
NAD 1927
X=711819' Y=506878'
LAT=N32.391654°
LONG=W103.647107°
2640' FSL 1980' FWL

PROPOSED PENETRATION POINT 2
NEW MEXICO EAST
NAD 1983
X=753019' Y=504298'
LAT=N32.384520°
LONG=W103.647592°
NAD 1927
X=711837' Y=504238'
LAT=N32.384397°
LONG=W103.647106°
0' FSL 1980' FWL

LOWER MOST PERF./ BOTTOM HOLE LOCATION
NEW MEXICO EAST
NAD 1983
X=753054' Y=499116'
LAT=N32.370274°
LONG=W103.647587°
NAD 1927
X=711871' Y=499055'
LAT=N32.370151°
LONG=W103.647101°
100' FSL 1980' FWL

Note: Bearings, coordinates and distances (grid) shown hereon are based on the New Mexico State Plane Coordinate System, East Zone, NAD 83-2011 (EPOCH 2010) framework, as derived by OPUS Solution. The elevations shown hereon are based on NAVD 88.

P:\EDG_...\20210818\PROD\C102_Package\C102_WLEO_Never_Better_14_Fed_Com_C102_WLE_723H_R3.dwg RHOMELEY 3/17/2026 11:23 AM

State of New Mexico
Energy, Minerals and Natural Resources Department

Submit Electronically
Via E-permitting

Oil Conservation Division
1220 South St. Francis Dr.
Santa Fe, NM 87505

NATURAL GAS MANAGEMENT PLAN

This Natural Gas Management Plan must be submitted with each Application for Permit to Drill (APD) for a new or recompleted well.

Section 1 – Plan Description
Effective May 25, 2021

I. Operator: ___EOG Resources, Inc._____ **OGRID:** _____7377_____ **Date:** 4/20/2026

II. Type: ☒ Original ☐ Amendment due to ☐ 19.15.27.9.D(6)(a) NMAC ☐ 19.15.27.9.D(6)(b) NMAC ☐ Other.

If Other, please describe: _____

III. Well(s): Provide the following information for each new or recompleted well or set of wells proposed to be drilled or proposed to be recompleted from a single well pad or connected to a central delivery point.

Well Name	API	ULSTR	Footages	Anticipated Oil BBL/D	Anticipated Gas MCF/D	Anticipated Produced Water BBL/D
NEVER BETTER 14 FED COM 723H		D-14-22S-32E	549' FNL & 1167' FWL	+/- 1000	+/- 3500	+/- 3000

IV. Central Delivery Point Name: ___NEVER BETTER 14 FED COM CTB_____ [See 19.15.27.9(D)(1) NMAC]

V. Anticipated Schedule: Provide the following information for each new or recompleted well or set of wells proposed to be drilled or proposed to be recompleted from a single well pad or connected to a central delivery point.

Well Name	API	Spud Date	TD Reached Date	Completion Commencement Date	Initial Flow Back Date	First Production Date
NEVER BETTER 14 FED COM 723H		11/10/26	12/10/26	01/10/27	02/10/27	03/10/27

VI. Separation Equipment: ☒ Attach a complete description of how Operator will size separation equipment to optimize gas capture.

VII. Operational Practices: ☒ Attach a complete description of the actions Operator will take to comply with the requirements of Subsection A through F of 19.15.27.8 NMAC.

VIII. Best Management Practices: ☒ Attach a complete description of Operator's best management practices to minimize venting during active and planned maintenance.

Section 2 – Enhanced Plan

EFFECTIVE APRIL 1, 2022

Beginning April 1, 2022, an operator that is not in compliance with its statewide natural gas capture requirement for the applicable reporting area must complete this section.

☒ Operator certifies that it is not required to complete this section because Operator is in compliance with its statewide natural gas capture requirement for the applicable reporting area.

IX. Anticipated Natural Gas Production:

Well	API	Anticipated Average Natural Gas Rate MCF/D	Anticipated Volume of Natural Gas for the First Year MCF

X. Natural Gas Gathering System (NGGS):

Operator	System	ULSTR of Tie-in	Anticipated Gathering Start Date	Available Maximum Daily Capacity of System Segment Tie-in

XI. Map. ☐ Attach an accurate and legible map depicting the location of the well(s), the anticipated pipeline route(s) connecting the production operations to the existing or planned interconnect of the natural gas gathering system(s), and the maximum daily capacity of the segment or portion of the natural gas gathering system(s) to which the well(s) will be connected.

XII. Line Capacity. The natural gas gathering system ☐ will ☐ will not have capacity to gather 100% of the anticipated natural gas production volume from the well prior to the date of first production.

XIII. Line Pressure. Operator ☐ does ☐ does not anticipate that its existing well(s) connected to the same segment, or portion, of the natural gas gathering system(s) described above will continue to meet anticipated increases in line pressure caused by the new well(s).

☐ Attach Operator's plan to manage production in response to the increased line pressure.

XIV. Confidentiality: ☐ Operator asserts confidentiality pursuant to Section 71-2-8 NMSA 1978 for the information provided in Section 2 as provided in Paragraph (2) of Subsection D of 19.15.27.9 NMAC, and attaches a full description of the specific information for which confidentiality is asserted and the basis for such assertion.

Section 3 - Certifications

Effective May 25, 2021

Operator certifies that, after reasonable inquiry and based on the available information at the time of submittal:

☒ Operator will be able to connect the well(s) to a natural gas gathering system in the general area with sufficient capacity to transport one hundred percent of the anticipated volume of natural gas produced from the well(s) commencing on the date of first production, taking into account the current and anticipated volumes of produced natural gas from other wells connected to the pipeline gathering system; or

☐ Operator will not be able to connect to a natural gas gathering system in the general area with sufficient capacity to transport one hundred percent of the anticipated volume of natural gas produced from the well(s) commencing on the date of first production, taking into account the current and anticipated volumes of produced natural gas from other wells connected to the pipeline gathering system. ***If Operator checks this box, Operator will select one of the following:***

Well Shut-In. ☐ Operator will shut-in and not produce the well until it submits the certification required by Paragraph (4) of Subsection D of 19.15.27.9 NMAC; or

Venting and Flaring Plan. ☐ Operator has attached a venting and flaring plan that evaluates and selects one or more of the potential alternative beneficial uses for the natural gas until a natural gas gathering system is available, including:

- **(a)** power generation on lease;
- **(b)** power generation for grid;
- **(c)** compression on lease;
- **(d)** liquids removal on lease;
- **(e)** reinjection for underground storage;
- **(f)** reinjection for temporary storage;
- **(g)** reinjection for enhanced oil recovery;
- **(h)** fuel cell production; and
- **(i)** other alternative beneficial uses approved by the division.

Section 4 - Notices

1. If, at any time after Operator submits this Natural Gas Management Plan and before the well is spud:

(a) Operator becomes aware that the natural gas gathering system it planned to connect the well(s) to has become unavailable or will not have capacity to transport one hundred percent of the production from the well(s), no later than 20 days after becoming aware of such information, Operator shall submit for OCD's approval a new or revised venting and flaring plan containing the information specified in Paragraph (5) of Subsection D of 19.15.27.9 NMAC; or

(b) Operator becomes aware that it has, cumulatively for the year, become out of compliance with its baseline natural gas capture rate or natural gas capture requirement, no later than 20 days after becoming aware of such information, Operator shall submit for OCD's approval a new or revised Natural Gas Management Plan for each well it plans to spud during the next 90 days containing the information specified in Paragraph (2) of Subsection D of 19.15.27.9 NMAC, and shall file an update for each Natural Gas Management Plan until Operator is back in compliance with its baseline natural gas capture rate or natural gas capture requirement.

2. OCD may deny or conditionally approve an APD if Operator does not make a certification, fails to submit an adequate venting and flaring plan which includes alternative beneficial uses for the anticipated volume of natural gas produced, or if OCD determines that Operator will not have adequate natural gas takeaway capacity at the time a well will be spud.

I certify that, after reasonable inquiry, the statements in and attached to this Natural Gas Management Plan are true and correct to the best of my knowledge and acknowledge that a false statement may be subject to civil and criminal penalties under the Oil and Gas Act.

Signature: Shea Bailey
Printed Name: Shea Bailey
Title: Regulatory Administrator
E-mail Address: Shea_Bailey@eogresources.com
Date: 4/20/2026
Phone: (432) 214-9797

OIL CONSERVATION DIVISION **(Only applicable when submitted as a standalone form)**
Approved By:
Title:
Approval Date:
Conditions of Approval:

Natural Gas Management Plan
Items VI-VIII

VI. Separation Equipment: Attach a complete description of how Operator will size separation equipment to optimize gas capture.

- Separation equipment will be sized to provide adequate separation for anticipated rates.
- Adequate separation relates to retention time for Liquid – Liquid separation and velocity for Gas-Liquid separation.
- Collection systems are appropriately sized to handle facility production rates on all (3) phases.
- Ancillary equipment and metering is selected to be serviced without flow interruptions or the need to release gas from the well.

VII. Operational Practices: Attach a complete description of the actions Operator will take to comply with the requirements of Subsection A through F 19.15.27.8 NMAC.

Drilling Operations

- All flare stacks will be properly sized. The flare stacks will be located at a minimum 100' from the nearest surface hole location on the pad.
- All natural gas produced during drilling operations will be flared, unless there is an equipment malfunction and/or to avoid risk of an immediate and substantial adverse impact on safety and the environment, at which point the gas will be vented.

Completions/Recompletions Operations

- New wells will not be flowed back until they are connected to a properly sized gathering system.
- The facility will be built/sized for maximum anticipated flowrates and pressures to minimize waste.
- For flowback operations, multiple stages of separation will be used as well as excess VRU and blowers to make sure waste is minimized off the storage tanks and facility.
- During initial flowback, the well stream will be routed to separation equipment.
- At an existing facility, when necessary, post separation natural gas will be flared until it meets pipeline specifications, at which point it will be turned into a collection system.
- At a new facility, post separation natural gas will be vented until storage tanks can safely function, at which point it will be flared until it meets pipeline spec.

Production Operations

- Weekly AVOs will be performed on all facilities.
- All flares will be equipped with auto-ignition systems and continuous pilot operations.
- After a well is stabilized from liquid unloading, the well will be turned back into the collection system.
- All plunger lift systems will be optimized to limit the amount of waste.
- All tanks will have automatic gauging equipment installed.
- Leaking thief hatches found during AVOs will be cleaned and properly re-sealed.

Performance Standards

- Production equipment will be designed to handle maximum anticipated rates and pressure.
- All flared gas will be combusted in a flare stack that is properly sized and designed to ensure proper combustion.
- Weekly AVOs will be performed on all wells and facilities that produce more than 60 Mcfd.

Measurement & Estimation

- All volume that is flared and vented that is not measured will be estimated.
- All measurement equipment for flared volumes will conform to API 14.10.
- No meter bypasses with be installed.

- When metering is not practical due to low pressure/low rate, the vented or flared volume will be estimated.

VIII. Best Management Practices: Attach a complete description of Operator's best management practices to minimize venting during active and planned maintenance.

- During downhole well maintenance, EOG will use best management practices to vent as minimally as possible.
- Prior to the commencement of any maintenance, the tank or vessel will be isolated from the rest of the facilities.
- All valves upstream of the equipment will be closed and isolated.
- After equipment has been isolated, the equipment will be blown down to as low a pressure as possible into the collection system.
- If the equipment being maintained cannot be relieved into the collection system, it shall be released to a tank where the vapor can either be captured or combusted if possible.
- After downhole well maintenance, natural gas will be flared until it reaches pipeline specification.

PECOS DISTRICT

SURFACE USE

CONDITIONS OF APPROVAL

OPERATOR'S NAME:	EOG Resources Incorporated
LEASE NO.:	NMNM 085937, NMNM 077058, NMNM 027805, and NMNM 081633
COUNTY:	Lea County, New Mexico

Wells:

The legal lands descriptions are located in Lea County, New Mexico (Table 1). The following surface hole locations are located in Township 22S, Range 32E, Sections 14 and 15; bottom hole locations are located in Township 22S, Range 32E, Section 23.

Table 1: Legal Lands Descriptions

Well Name	Surface Hole Legal Location*	Bottom Hole Legal Location*
Well Pad A – Center of Pad: 874' FNL and 264' FWL		
Never Better 14 Fed Com #201H	753' FNL and 367' FWL	100' FSL and 330' FWL
Never Better 14 Fed Com #202H	753' FNL and 433' FWL	100' FSL and 729' FWL
Never Better 14 Fed Com #301H	753' FNL and 400' FWL	100' FSL and 430' FWL
Never Better 14 Fed Com #401H	754' FNL and 466' FWL	100' FSL and 870' FWL
Never Better 14 Fed Com #501H	811' FNL and 207' FWL	100' FSL and 330' FWL
Never Better 14 Fed Com #502H	811' FNL and 273' FWL	100' FSL and 908' FWL
Never Better 14 Fed Com #581H	811' FNL and 273' FWL	100' FSL and 330' FWL
Never Better 14 Fed Com #582H	812' FNL and 306' FWL	100' FSL and 1,485' FWL
Never Better 14 Fed Com #601H	869' FNL and 81' FWL	100' FSL and 660' FWL
Never Better 14 Fed Com #701H	869' FNL and 48' FWL	100' FSL and 330' FWL
Never Better 14 Fed Com #702H	870' FNL and 147' FWL	100' FSL and 990' FWL
Never Better 14 Fed Com #721H	869' FNL and 114' FWL	100' FSL and 660' FWL
Place Holder 1	815' FNL and 525' FWL	
Place Holder 2	848' FNL and 525' FWL	
Place Holder 3	881' FNL and 525' FWL	
Place Holder 4	914' FNL and 525' FWL	
Well Pad B – Center of Pad: 732' FNL and 1,163' FWL		
Never Better 14 Fed Com #203H	902' FNL and 1,285' FWL	100' FSL and 1,254' FWL
Never Better 14 Fed Com #204H	869' FNL and 1,285' FWL	100' FSL and 1,716' FWL
Never Better 14 Fed Com #302H	836' FNL and 1,285' FWL	100' FSL and 1,310' FWL
Never Better 14 Fed Com #402H	935' FNL and 1,285' FWL	100' FSL and 1,760' FWL
Never Better 14 Fed Com #503H	676' FNL and 1,226' FWL	100' FSL and 1,485' FWL
Never Better 14 Fed Com #504H	709' FNL and 1,226' FWL	100' FSL and 2,063' FWL
Never Better 14 Fed Com #505H	775' FNL and 1,226' FWL	100' FSL and 2,590' FEL

Approval Date: 03/05/2025

Well Name	Surface Hole Legal Location*	Bottom Hole Legal Location*
Never Better 14 Fed Com #583H	742' FNL and 1,226' FWL	100' FSL and 2,590' FWL
Never Better 14 Fed Com #722H	516' FNL and 1,167' FWL	100' FSL and 1,320' FWL
Never Better 14 Fed Com #723H	549' FNL and 1,167' FWL	100' FSL and 1,980' FWL
Place Holder 5	582' FNL and 1,167' FWL	
Place Holder 6	615' FNL and 1,167' FWL	
Place Holder 7	994' FNL and 1,224' FWL	
Place Holder 8	993' FNL and 1,191' FWL	
Place Holder 9	993' FNL and 1,158' FWL	
Place Holder 10	992' FNL and 1,125' FWL	
Well Pad C – Center of Pad: 742' FNL and 1,908' FWL		
Never Better 14 Fed Com #205H	845' FNL and 2,030' FWL	100' FSL and 2,178' FWL
Never Better 14 Fed Com #206H	911' FNL and 2,030' FWL	100' FSL and 2,590' FWL
Never Better 14 Fed Com #303H	878' FNL and 2,030' FWL	100' FSL and 2,190' FWL
Never Better 14 Fed Com #403H	944' FNL and 2,030' FWL	100' FSL and 2,630' FEL
Never Better 14 Fed Com #602H	718' FNL and 1,971' FWL	100' FSL and 1,980' FWL
Never Better 14 Fed Com #703H	685' FNL and 1,971' FWL	100' FSL and 1,650' FWL
Never Better 14 Fed Com #704H	751' FNL and 1,971' FWL	100' FSL and 1,650' FWL
Never Better 14 Fed Com #724H	784' FNL and 1,971' FWL	100' FSL and 2,590' FEL
Place Holder 11	526' FNL and 1,912' FWL	
Place Holder 12	559' FNL and 1,912' FWL	
Place Holder 13	592' FNL and 1,912' FWL	
Place Holder 14	625' FNL and 1,912' FWL	
Place Holder 15	1,003' FNL and 1,969' FWL	
Place Holder 16	1,003' FNL and 1,936' FWL	
Place Holder 17	1,003' FNL and 1,903' FWL	
Place Holder 18	1,002' FNL and 1,870' FWL	
Well Pad D – Center of Pad: 986' FNL and 2,459' FEL		
Never Better 14 Fed Com #207H	1,247' FNL and 2,449' FEL	100' FSL and 2,178' FEL
Never Better 14 Fed Com #208H	1,244' FNL and 2,383' FEL	100' FSL and 1,716' FEL
Never Better 14 Fed Com #304H	1,249' FNL and 2,482' FEL	100' FSL and 2,190' FEL
Never Better 14 Fed Com #404H	1,245' FNL and 2,416' FEL	100' FSL and 1,750' FEL
Never Better 14 Fed Com #506H	1,082' FNL and 2,331' FEL	100' FSL and 2,063' FEL
Never Better 14 Fed Com #507H	1,115' FNL and 2,330' FEL	100' FSL and 1,485' FEL
Never Better 14 Fed Com #584H	1,148' FNL and 2,329' FEL	100' FSL and 1,485' FEL
Never Better 14 Fed Com #603H	803' FNL and 2,466' FEL	100' FSL and 1,980' FEL
Never Better 14 Fed Com #705H	770' FNL and 2,468' FEL	100' FSL and 2,310' FEL
Never Better 14 Fed Com #706H	869' FNL and 2,462' FEL	100' FSL and 1,650' FEL
Never Better 14 Fed Com #725H	836' FNL and 2,464' FEL	100' FSL and 1,980' FEL
Never Better 14 Fed Com #726H	902' FNL and 2,461' FEL	100' FSL and 1,320' FEL

Well Name	Surface Hole Legal Location*	Bottom Hole Legal Location*
Place Holder 19	959' FNL and 2,398' FEL	
Place Holder 20	992' FNL and 2,396' FEL	
Place Holder 21	1,025' FNL and 2,394' FEL	
Place Holder 22	1,181' FNL and 2,326' FEL	
Well Pad E – Center of Pad: 1,479' FNL and 1,338' FEL		
Never Better 14 Fed Com #209H	1,450' FNL and 1,158' FEL	100' FSL and 1,254' FEL
Never Better 14 Fed Com #210H	1,486' FNL and 1,103' FEL	100' FSL and 729' FEL
Never Better 14 Fed Com #211H	1,569' FNL and 1,085' FEL	100' FSL and 332' FEL
Never Better 14 Fed Com #305H	1,432' FNL and 1,186' FEL	100' FSL and 1,310' FEL
Never Better 14 Fed Com #306H	1,597' FNL and 1,103' FEL	100' FSL and 430' FEL
Never Better 14 Fed Com #405H	1,468' FNL and 1,130' FEL	100' FSL and 870' FEL
Never Better 14 Fed Com #508H	1,396' FNL and 1,352' FEL	100' FSL and 908' FEL
Never Better 14 Fed Com #509H	1,414' FNL and 1,324' FEL	100' FSL and 332' FEL
Never Better 14 Fed Com #585H	1,432' FNL and 1,296' FEL	100' FSL and 332' FEL
Never Better 14 Fed Com #604H	1,395' FNL and 1,463' FEL	100' FSL and 660' FEL
Never Better 14 Fed Com #707H	1,359' FNL and 1,518' FEL	100' FSL and 990' FEL
Never Better 14 Fed Com #708H	1,413' FNL and 1,435' FEL	100' FSL and 332' FEL
Never Better 14 Fed Com #727H	1,377' FNL and 1,490' FEL	100' FSL and 660' FEL
Place Holder 23	1,450' FNL and 1,269' FEL	
Place Holder 24	1,625' FNL and 1,121' FEL	
Place Holder 25	1,652' FNL and 1,139' FEL	

*FNL = from north line; FSL = from south line; FWL = from west line; FEL = from east line

TABLE OF CONTENTS

1. GENERAL PROVISIONS 6
1.1. ARCHAEOLOGICAL, PALEONTOLOGY & HISTORICAL SITES 6
1.2. RANGELAND RESOURCES 6
1.2.1. Cattleguards 6
1.2.2. Fence Requirement 7
1.2.3. Livestock Watering Requirement 7
1.3. NOXIOUS WEEDS 7
1.3.1 African Rue (Peganum harmala) 7
1.4. LIGHT POLLUTION 7
1.4.1. Downfacing 7
1.4.2. Shielding 7
1.4.3. Lighting Color 8
2. SPECIAL REQUIREMENTS 8
2.1. WATERSHED 8
2.1.1. Tank Battery 8
2.1.2. Buried/Surface Line(s) 8
2.1.3. Electric Line(s) 8
2.1.4. Temporary Use Fresh Water Frac Line(s) 8
2.3 WILDLIFE 9
2.3.1 Lesser Prairie Chicken 9
2.4 VISUAL RESOURCE MANAGEMENT 9
2.5.1 VRM IV 9
2.5.2 VRM III Facility Requirement 9
3. CONSTRUCTION REQUIRENMENTS 9
3.1 CONSTRCUTION NOTIFICATION 9
3.2 TOPSOIL 10
3.3 CLOSED LOOP SYSTEM 10
3.4 FEDERAL MINERAL PIT 10
3.5 WELL PAD & SURFACING 10
3.6 EXCLOSURE FENCING (CELLARS & PITS) 10
3.7 ON LEASE ACESS ROAD 10
3.7.1 Road Width 10
3.7.2 Surfacing 10

3.7.3 Crowning 11
3.7.4 Ditching 11
3.7.5 Turnouts 11
3.7.6 Drainage 11
3.7.7 Public Access 12
4. PIPELINES 14
4.1 TEMPORARY FRESHWATER PIPELINES 14
4.2 BURIED PIPELINES 15
4.3 SURFACE PIPELINES 17
4.4 OVERHEAD ELECTRIC LINES 19
4.5 RANGELAND MITIGATION FOR PIPELINES 20
4.5.1 Fence Requirement 20
4.5.2 Cattleguards 20
4.5.3 Livestock Watering Requirement 21
5. PRODUCTION (POST DRILLING) 21
5.1 WELL STRUCTURES & FACILITIES 21
5.1.1 Placement of Production Facilities 21
5.1.2 Exclosure Netting (Open-top Tanks) 21
5.1.3. Chemical and Fuel Secondary Containment and Exclosure Screening 21
5.1.4. Open-Vent Exhaust Stack Exclosures 22
5.1.5. Containment Structures 22
6. RECLAMATION 22
6.1 ROAD AND SITE RECLAMATION 22
6.2 EROSION CONTROL 22
6.3 INTERIM RECLAMATION 22
6.4 FINAL ABANDONMENT & RECLAMATION 23
6.5 SEEDING TECHNIQUES 23
6.6 SOIL SPECIFIC SEED MIXTURE 23

1. GENERAL PROVISIONS

The failure of the operator to comply with these requirements may result in the assessment of liquidated damages or penalties pursuant to 43 CFR 3163.1 or 3163.2. A copy of these conditions of approval shall be present on the location during construction, drilling and reclamation activity. Any request for a variance shall be submitted to the Authorized Officer on Form 3160-5, Sundry Notices and Report on Wells.

1.1. ARCHAEOLOGICAL, PALEONTOLOGY & HISTORICAL SITES

Any cultural resource (historic or prehistoric site or object) discovered by the operator, or any person working on the operator's behalf, on the public or federal land shall be immediately reported to the Authorized Officer. The operator shall suspend all operations in the immediate area (within 100ft) of such discovery until written authorization to proceed is issued by the Authorized Officer. An evaluation of the discovery will be made by the Authorized Officer, in conjunction with a BLM Cultural Resource Specialist, to determine appropriate actions to prevent the loss of significant scientific values. The operator shall be responsible for the cost of evaluation and any decision as to the proper mitigation measures will be made by the Authorized Officer after consulting with the operator.

Traditional Cultural Properties (TCPs) are protected by NHPA as codified in 36 CFR 800 for possessing traditional, religious, and cultural significance tied to a certain group of individuals. Though there are currently no designated TCPs within the project area or within a mile of the project area, but it is possible for a TCP to be designated after the approval of this project. **If a TCP is designated in the project area after the project's approval, the BLM Authorized Officer will notify the operator of the following conditions and the duration for which these conditions are required.**

1. Temporary halting of all construction, drilling, and production activities to lower noise.
2. Temporary shut-off of all artificial lights at night.

The operator is hereby obligated to comply with procedures established in the Native American Graves Protection and Repatriation Act (NAGPRA), specifically NAGPRA Subpart B regarding discoveries, to protect human remains, associated funerary objects, sacred objects, and objects of cultural patrimony discovered during project work. If any human skeletal remains, funerary objects, sacred objects, or objects of cultural patrimony are discovered at any time during construction, all construction activities shall halt and a BLM-CFO Authorized Officer will be notified immediately. The BLM will then be required to be notified, in writing, within 24 hours of the discovery. The written notification should include the geographic location by county and state, the contents of the discovery, and the steps taken to protect said discovery. You must also include any potential threats to the discovery and a conformation that all activity within 100ft of the discovery has ceased and work will not resume until written certification is issued. All work on the entire project must halt for a minimum of 3 days and work cannot resume until an Authorized Officer grants permission to do so.

Any paleontological resource discovered by the operator, or any person working on the operator's behalf, on public or Federal land shall be immediately reported to the Authorized Officer. The operator shall suspend all operations in the immediate area of such discovery until written authorization to proceed is issued by the Authorized Officer. The operator will be responsible for the cost of evaluation and any decision as to the proper mitigation measures will be made by the Authorized Officer after consulting with the operator.

1.2. RANGELAND RESOURCES

1.2.1. **Cattleguards**

Where a permanent cattleguard is approved, an appropriately sized cattleguard(s) sufficient to carry out the project shall be installed and maintained at fence crossing(s). Any existing cattleguard(s) on the access road shall be repaired or replaced if they are damaged or have deteriorated beyond practical use. The operator shall be responsible for the condition of the existing cattleguard(s) that are in place and are utilized during lease operations. A gate shall be constructed on one side of the cattleguard and fastened securely to H-braces.

1.2.2. **Fence Requirement**

Where entry granted across a fence line, the fence must be braced and tied off on both sides of the passageway prior to cutting. Once the work is completed, the fence will be restored to its prior condition, or better. The operator shall notify the private surface landowner or the grazing allotment holder prior to crossing any fence(s).

1.2.3. **Livestock Watering Requirement**

Any damage to structures that provide water to livestock throughout the life of the well, caused by operations from the well site, must be immediately corrected by the operator. The operator must notify the BLM office (575-234-5972) and the private surface landowner or the grazing allotment holder if any damage occurs to structures that provide water to livestock.

1.3. NOXIOUS WEEDS

The operator shall be held responsible if noxious weeds become established within the areas of operations. Weed control shall be required on the disturbed land where noxious weeds exist, which includes the roads, pads, associated pipeline corridor, and adjacent land affected by the establishment of weeds due to this action. The operator shall consult with the Authorized Officer for acceptable weed control methods, which include following EPA, New Mexico Department of Agriculture, and BLM requirements and policies.

1.3.1 African Rue (Peganum harmala)

Spraying: The spraying of African Rue must be completed by a licensed or certified applicator. In order to attempt to kill or remove African Rue the proper mix of chemical is needed. The mix consists of 2% Arsenal (Imazapyr) and 2% Roundup (Glyphosate) along with a nonionic surfactant. Any other chemicals or combinations shall be approved by the BLM Noxious Weeds Coordinator prior to treatment. African Rue shall be sprayed in connection to any dirt working activities or disturbances to the site being sprayed. Spraying of African Rue shall be done on immature plants at initial growth through flowering and mature plants between budding and flowering stages. Spraying shall not be conducted after flowering when plant is fruiting. This will ensure optimal intake of chemical and decrease chances of developing herbicide resistance. After spraying, the operator or necessary parties must contact the Carlsbad Field Office to inspect the effectiveness of the application treatment to the plant species. No ground disturbing activities can take place until the inspection by the authorized officer is complete. The operator may contact the Environmental Protection Department or the BLM Noxious Weed Coordinator at (575) 234-5972 or BLM_NM_CFO_NoxiousWeeds@blm.gov.

Management Practices: In addition to spraying for African Rue, good management practices should be followed. All equipment should be washed off using a power washer in a designated containment area. The containment area shall be bermed to allow for containment of the seed to prevent it from entering any open areas of the nearby landscape. The containment area shall be excavated near or adjacent to the well pad at a depth of three feet and just large enough to get equipment inside it to be washed off. This will allow all seeds to be in a centrally located area that can be treated at a later date if the need arises.

1.4. LIGHT POLLUTION

1.4.1. **Downfacing**

All permanent lighting will be pointed straight down at the ground in order to prevent light spill beyond the edge of approved surface disturbance.

1.4.2. **Shielding**

All permanent lighting will use full cutoff luminaires, which are fully shielded (i.e., not emitting direct or indirect light above an imaginary horizontal plane passing through the lowest part of the light source).

1.4.3. **Lighting Color**

Lighting shall be 3,500 Kelvin or less (Warm White) except during drilling, completion, and workover operations. No bluish-white lighting shall be used in permanent outdoor lighting.

2. SPECIAL REQUIREMENTS

2.1. WATERSHED

The entire well pad(s) will be bermed to prevent oil, salt, and other chemical contaminants from leaving the well pad. The compacted berm shall be constructed at a minimum of 12 inches with impermeable mineral material (e.g. caliche). Topsoil shall not be used to construct the berm. No water flow from the uphill side(s) of the pad shall be allowed to enter the well pad. The integrity of the berm shall be maintained around the surfaced pad throughout the life of the well and around the downsized pad after interim reclamation has been completed. Any water erosion that may occur due to the construction of the well pad during the life of the well will be quickly corrected and proper measures will be taken to prevent future erosion. Stockpiling of topsoil is required. The topsoil shall be stockpiled in an appropriate location to prevent loss of soil due to water or wind erosion and not used for berming or erosion control. If fluid collects within the bermed area, the fluid must be vacuumed into a safe container and disposed of properly at a state approved facility.

2.1.1. **Tank Battery**

Tank battery locations will be lined and bermed. A 20-mil permanent liner will be installed with a 4 oz. felt backing to prevent tears or punctures. Secondary containment holding capacity must be large enough to contain 1 ½ times the content of the largest tank or 24-hourproduction, whichever is greater (displaced volume from all tanks within the berms MUST be subtracted from total volume of containment in calculating holding capacity). Automatic shut off, check valves, or similar systems will be installed for tanks to minimize the effects of catastrophic line failures used in production or drilling.

2.1.2. **Buried/Surface Line(s)**

When crossing ephemeral drainages, the pipeline(s) will be buried to a minimum depth of 48 inches from the top of pipe to ground level. Erosion control methods such as gabions and/or rock aprons must be placed on both up and downstream sides of the pipeline crossing. In addition, curled (weed free) wood/straw fiber wattles/logs and/or silt fences must be placed on the downstream side for sediment control during construction and maintained until soils and vegetation have stabilized. Water bars must be placed within the corridor to divert and dissipate surface runoff. A pipeline access road is not permitted to cross ephemeral drainages. Traffic must be diverted to a preexisting route. Additional seeding may be required in floodplains and drainages to restore energy dissipating vegetation.

Prior to pipeline installation/construction a leak detection plan will be developed. The method(s) could incorporate gauges to detect pressure drops, situating valves and lines so they can be visually inspected periodically or installing electronic sensors to alarm when a leak is present. The leak detection plan will incorporate an automatic shut off system that will be installed for proposed pipelines to minimize the effects of an undesirable event.

2.1.3. **Electric Line(s)**

Any water erosion that may occur due to the construction of overhead electric line and during the life of the power line will be quickly corrected and proper measures will be taken to prevent future erosion. A power pole must not be placed in drainages, playas, wetlands, riparian areas, or floodplains and must span across the features at a distance away that does not promote further erosion.

2.1.4. **Temporary Use Fresh Water Frac Line(s)**

Once the temporary use exceeds the timeline of 180 days and/or with a 90 day extension status; further analysis will be required if the applicant pursues to turn the temporary pipeline into a permanent pipeline.

2.3 WILDLIFE

2.3.1 **Lesser Prairie Chicken**

2.3.1.1 Timing Limitation Stipulation/Condition of Approval for Lesser Prairie-Chicken:

Oil and gas activities including 3-D geophysical exploration, and drilling will not be allowed in lesser prairie-chicken habitat during the period from March 1st through June 15th annually. During that period, other activities that produce noise or involve human activity, such as the maintenance of oil and gas facilities, geophysical exploration other than 3-D operations, and pipeline, road, and well pad construction, will be allowed except between 3:00 am and 9:00 am. The 3:00 am to 9:00 am restriction will not apply to normal, around-the-clock operations, such as venting, flaring, or pumping, which do not require a human presence during this period. Additionally, no new drilling will be allowed within up to 200 meters of leks known at the time of permitting. Normal vehicle use on existing roads will not be restricted. Exhaust noise from pump jack engines must be muffled or otherwise controlled so as not to exceed 75 db measured at 30 ft. from the source of the noise.

2.3.1.2 Timing Limitation Exceptions:

The Carlsbad Field Office will publish an annual map of where the LPC timing and noise stipulations and conditions of approval (Limitations) will apply for the identified year (between March 1 and June 15) based on the latest survey information. The LPC Timing Area map will identify areas which are Habitat Areas (HA), Isolated Population Area (IPA), and Primary Population Area (PPA). The LPC Timing Area map will also have an area in red crosshatch. The red crosshatch area is the only area where an operator is required to submit a request for exception to the LPC Limitations. If an operator is operating outside the red crosshatch area, the LPC Limitations do not apply for that year and an exception to LPC Limitations is not required.

2.3.1.3 Ground-level Abandoned Well Marker to avoid raptor perching:

Upon the plugging and subsequent abandonment of the well, the well marker will be installed at ground level on a plate containing the pertinent information for the plugged well. For more installation details, contact the Carlsbad Field Office at BLM_NM_CFO_Construction_Reclamation@blm.gov.

2.4 VISUAL RESOURCE MANAGEMENT

2.5.1 **VRM IV**

Above-ground structures including meter housing that are not subject to safety requirements are painted a flat non-reflective paint color, Shale Green from the BLM Standard Environmental Color Chart (CC-001: June 2008).

2.5.2 **VRM III Facility Requirement**

Above-ground structures including meter housing that are not subject to safety requirements are painted a flat non-reflective paint color, Shale Green from the BLM Standard Environmental Color Chart (CC-001: June 2008).

3. CONSTRUCTION REQUIRENMENTS

3.1 CONSTRCUTION NOTIFICATION

The BLM shall administer compliance and monitor construction of the access road and well pad. Notify the Carlsbad Field Office at BLM_NM_CFO_Construction_Reclamation@blm.gov at least 3 working days prior to commencing construction of the access road and/or well pad.

When construction operations are being conducted on this well, the operator shall have the approved APD and COAs on the well site and they shall be made available upon request by the Authorized Officer.

3.2 TOPSOIL

The operator shall strip the topsoil (the A horizon) from the entire well pad area and stockpile the topsoil along the edge of the well pad as depicted in the APD. No more than the top 6 inches of topsoil shall be removed. All the stockpiled topsoil will be redistributed over the interim reclamation areas. Topsoil shall not be used for berming the pad or facilities. For final reclamation, the topsoil shall be spread over the entire pad area for seeding preparation.

Other subsoil (the B horizon and below) stockpiles must be completely segregated from the topsoil stockpile. Large rocks or subsoil clods (not evident in the surrounding terrain) must be buried within the approved area for interim and final reclamation.

3.3 CLOSED LOOP SYSTEM

Tanks are required for drilling operations: No reserve pits will be used for drill cuttings. The operator shall properly dispose of drilling contents at an authorized disposal site.

3.4 FEDERAL MINERAL PIT

Payment shall be made to the BLM prior to removal of any federal mineral materials. Call the Carlsbad Field Office at (575) 234-5972.

3.5 WELL PAD & SURFACING

Any surfacing material used to surface the well pad will be removed at the time of interim and final reclamation.

3.6 EXCLOSURE FENCING (CELLARS & PITS)

The operator will install and maintain exclosure fencing for all open well cellars to prevent access to public, livestock, and large forms of wildlife before and after drilling operations until the well cellar is free of fluids and the operator initiates backfilling. (For examples of exclosure fencing design, refer to BLM's Oil and Gas Gold Book, Exclosure Fence Illustrations, Figure 1, Page 18.)

The operator will also install and maintain mesh netting for all open well cellars to prevent access to smaller wildlife before and after drilling operations until the well cellar is free of fluids and the operator. Use a maximum netting mesh size of 1 ½ inches. The netting must not have holes or gaps.

3.7 ON LEASE ACESS ROAD

3.7.1 **Road Width**

The access road shall have a driving surface that creates the smallest possible surface disturbance and does not exceed fourteen (14) feet in width. The maximum width of surface disturbance, when constructing the access road, shall not exceed thirty(30) feet.

3.7.2 **Surfacing**

Surfacing material is not required on the new access road driving surface. If the operator elects to surface the new access road or pad, the surfacing material may be required to be removed at the time of reclamation.

Where possible, no improvements will be made on the unsurfaced access road other than to remove vegetation as necessary, road irregularities, safety issues, or to fill low areas that may sustain standing water.

The Authorized Officer reserves the right to require surfacing of any portion of the access road at any time deemed necessary. Surfacing may be required in the event the road deteriorates, erodes, road traffic increases, or it is determined to be beneficial for future field development. The surfacing depth and type of material will be determined at the time of notification.

3.7.3 **Crowning**

Crowning shall be done on the access road driving surface. The road crown shall have a grade of approximately 2% (i.e., a 1" crown on a 14' wide road). The road shall conform to Figure 1; cross section and plans for typical road construction.

3.7.4 **Ditching**

Ditching shall be required on both sides of the road.

3.7.5 **Turnouts**

Vehicle turnouts shall be constructed on the road. Turnouts shall be intervisible with interval spacing distance less than 1000 feet. Turnouts shall conform to Figure 1; cross section and plans for typical road construction.

3.7.6 **Drainage**

Drainage control systems shall be constructed on the entire length of road (e.g. ditches, sidehill outsloping and insloping, leadoff ditches, culvert installation, and low water crossings).

A typical lead-off ditch has a minimum depth of 1 foot below and a berm of 6 inches above natural ground level. The berm shall be on the down-slope side of the lead-off ditch.

Cross Section of a Typical Lead-off Ditch

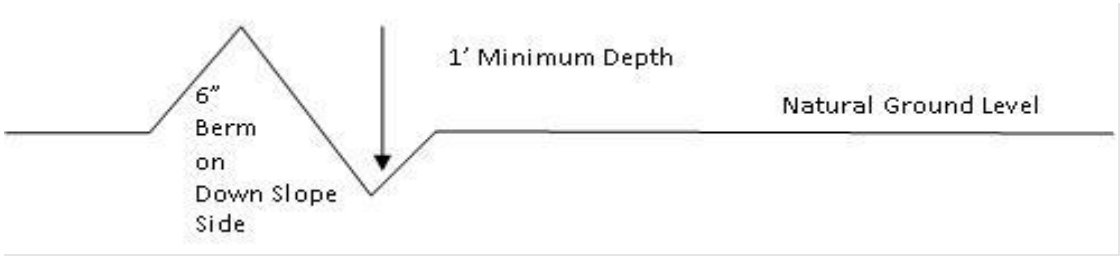

All lead-off ditches shall be graded to drain water with a 1 percent minimum to 3 percent maximum ditch slope. The spacing interval are variable for lead-off ditches and shall be determined according to the formula for spacing intervals of lead-off ditches, but may be amended depending upon existing soil types and centerline road slope (in %);

Formula for Spacing Interval of Lead-off Ditches

Example - On a 4% road slope that is 400 feet long, the water flow shall drain water into a lead-off ditch. Spacing interval shall be determined by the following formula:

400 foot road with 4% road slope: $\frac{400'}{4}$ + 100' = 200' lead-off ditch interval

3.7.7 **Public Access**

Public access on this road shall not be restricted by the operator without specific written approval granted by the Authorized Officer.

Approval Date: 03/05/2025

Construction Steps

1. Salvage topsoil
2. Construct road
3. Redistribute topsoil
4. Revegetate slopes

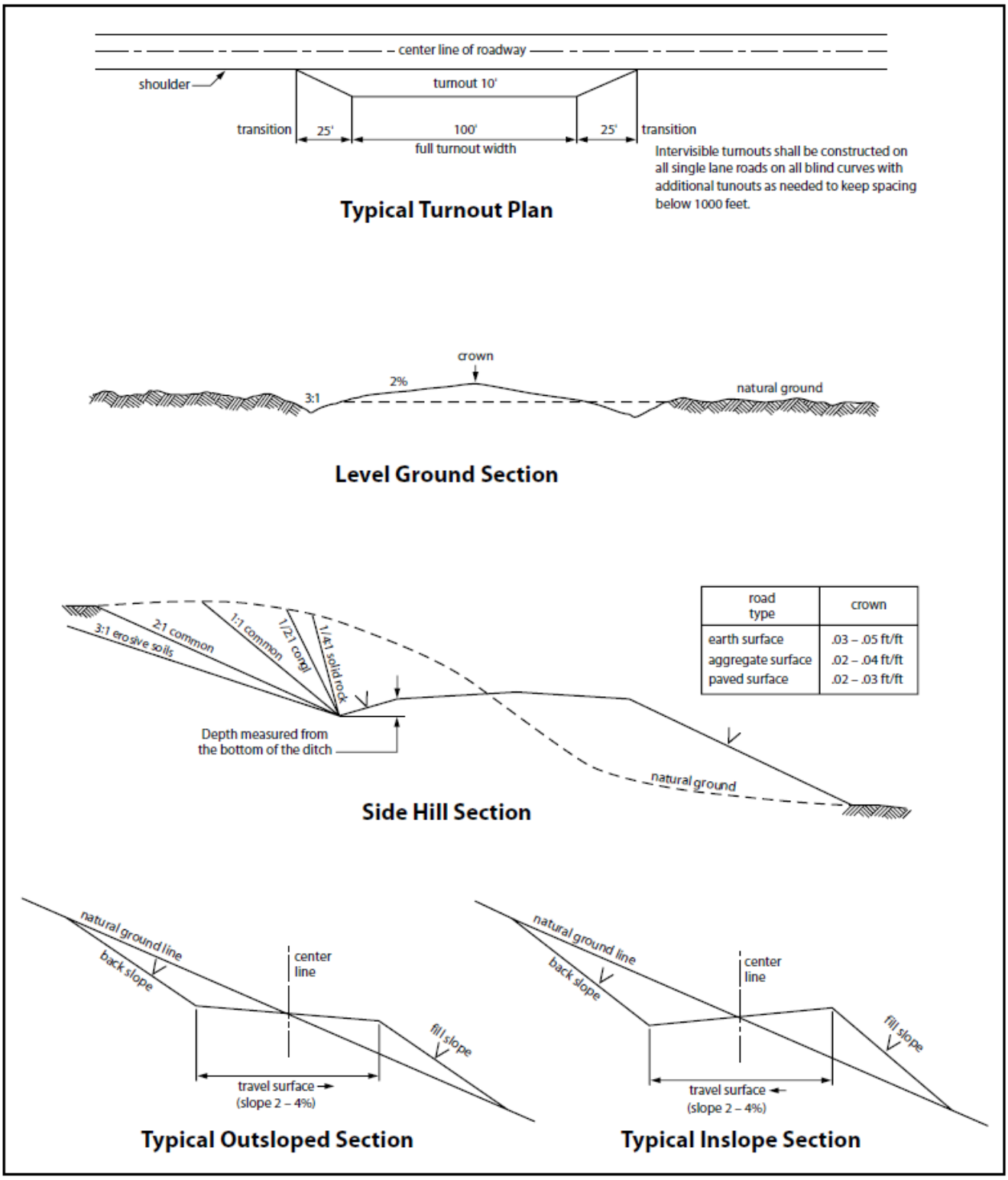

Figure 1. Cross-sections and plans for typical road sections representative of BLM resource or FS local and higher-class roads.

4. PIPELINES

- The BLM, Carlsbad Field Office, will be informed immediately if any subsurface drainage channels, passages, or voids are intersected by trenching, and no pipe will be laid in the trench at that point until clearance has been issued by the Authorized Officer.
- A leak detection plan **will be submitted to the BLM Carlsbad Field Office for approval** prior to pipeline installation. The method could incorporate gauges to detect pressure drops, situating values and lines so they can be visually inspected periodically or installing electronic sensors to alarm when a leak is present. The leak detection plan will incorporate an automatic shut off system that will be installed for proposed pipelines to minimize the effects of an undesirable event.
- Regular monitoring is required to quickly identify leaks for their immediate and proper treatment.
- All spills or leaks will be reported to the BLM immediately for their immediate and proper treatment.

4.1 TEMPORARY FRESHWATER PIPELINES

Subject to the terms and conditions which are shown below, is hereby approved:

1. Surface pipelines 6.5 inch to 16 inch OD may be in place for no more than 180 days not including installation. In accordance with your request, this 180 day period is requested to begin at the start of construction.

2. Surface pipeline will be in operation for no more than 180 days; a maximum of seven (7) days authorized for installation of the lay flat poly line prior to operation.

3. Surface pipelines larger than 6.5 inch to-16-inch OD may be in place for no more than 180 days from date of authorization, unless a SF-299 is submitted within 30 days of this decision expiring requesting a long term buried fresh water pipeline, and processing of the SF-299 is not yet complete at the end of 30 days, in which case the line(s) may be left in place until a decision is made on the SF-299.
    - All lines will be removed when no longer in use.
    - Width of authorized use is 15-feet.

4. No blading and/or earthwork will be allowed in order to place the pipeline except burying the line under crossings.

5. The pipeline will be buried under all intersecting routes, including BLM-designated trails and access roads into caliche pits, rancher watering stations, etc. All such buried crossings will be removed when the pipeline is removed, unless otherwise approved by the Authorized Officer.

6. Pipelines larger than 6.5-inch OD may utilize other crossing methodologies (but any fill placed over pipeline must be brought in from off-site).

7. Pipeline crossings of fences must be avoided where possible. If a crossing is necessary, contact fence owner [usually the grazing permittee] prior to installation, and install by threading pipeline under the lowest wire of the fence; pipeline must never cross on top of any fence wires.

8. The pipeline shall stay within 10 feet maximum of existing disturbance (e.g. lease road, pipeline corridor etc.); placement must be within 5 feet whenever possible.

9. Placement of pumps or other high-maintenance equipment shall be installed along maintained lease roads.
10. Gas or diesel pumps, generators, or compressors shall be placed on geosynthetic lining [or 20 mil plastic] and in a containment structure capable of containing all potentially released fuels.

Containments must be protected against wildlife deaths in accordance with oilfield best management practices.

11. Due to potential damage to natural resources, no work is allowed during inclement weather.

12. Pipeline will be marked with your company's name and contact number, at beginning and ending points, at all public-road crossings, and at intervals not exceeding every 0.6 mile, unless otherwise approved by the Authorized Officer.

13. Should unforeseen damage occur to resources, BLM will require reclamation of the impacted land.

14. No water may be released into the environment without BLM consent.

15. Placement of surface pipelines along or under public roadways may require permits from the road authority.

4.2 BURIED PIPELINES

A copy of the application (APD, or Sundry Notice) and attachments, including conditions of approval, survey plat and/or map, will be on location during construction. BLM personnel may request a copy of your permit during construction to ensure compliance with all stipulations.

Operator agrees to comply with the following stipulations to the satisfaction of the Authorized Officer:

1. The Operator shall indemnify the United States against any liability for damage to life or property arising from the occupancy or use of public lands under this APD.

2. The Operator shall comply with all applicable Federal laws and regulations existing or hereafter enacted or promulgated. In any event, the operator shall comply with the Toxic Substances Control Act of 1976 as amended, 15 USC 2601 et seq. (1982) with regards to any toxic substances that are used, generated by or stored on the pipeline corridor or on facilities authorized under this APD. (See 40 CFR Part 702-799 and especially, provisions on polychlorinated biphenyls, 40 CFR 761.1-761.193.) Additionally, any release of toxic substances (leaks, spills, etc.) in excess of the reportable quantity established by 40 CFR Part 117 shall be reported as required by the Comprehensive Environmental Response, Compensation, and Liability Act, section 102b. A copy of any report required or requested by any Federal agency or State government as a result of a reportable release or spill of any toxic substances shall be furnished to the authorized officer concurrent with the filing of the reports to the involved Federal agency or State government.

3. The operator agrees to indemnify the United States against any liability arising from the release of any hazardous substance or hazardous waste (as these terms are defined in the Comprehensive Environmental Response, Compensation and Liability Act of 1980, 42 U.S.C. 9601, et seq. or the Resource Conservation and Recovery Act, 42 U.S.C.6901, et seq.) on the Pipeline corridor (unless the release or threatened release is wholly unrelated to the operator's activity on the pipeline corridor), or resulting from the activity of the Operator on the pipeline corridor. This agreement applies without regard to whether a release is caused by the operator, its agent, or unrelated third parties.

4. If, during any phase of the construction, operation, maintenance, or termination of the pipeline, any oil or other pollutant is discharged from the pipeline system, impacting Federal lands, the control and total removal, disposal, and cleaning up of such oil or other pollutant, wherever found, shall be the responsibility of operator, regardless of fault. Upon failure of operator to control, dispose of, or clean up such discharge on or affecting Federal lands, or to repair all damages resulting therefrom, on the Federal lands, the Authorized Officer may take such measures as he deems necessary to control and clean up the discharge and restore the area, including where appropriate, the aquatic environment and fish and wildlife habitats, at the full expense of the operator. Such action by the Authorized Officer shall not relieve operator of any responsibility as provided herein.

5. All construction and maintenance activity will be confined to the authorized pipeline corridor.

6. The pipeline will be buried with a minimum cover of 36 inches between the top of the pipe and ground level.

7. The maximum allowable disturbance for construction in this pipeline corridor will be 30 feet:

   - Blading of vegetation within the pipeline corridor will be allowed: maximum width of blading operations will not exceed **20** feet. The trench is included in this area. (*Blading is defined as the complete removal of brush and ground vegetation*.)

   - Clearing of brush species within the pipeline corridor will be allowed: maximum width of clearing operations will not exceed **30** feet. The trench and bladed area are included in this area. (*Clearing is defined as the removal of brush while leaving ground vegetation (grasses, weeds, etc.) intact. Clearing is best accomplished by holding the blade 4 to 6 inches above the ground surface.*)

   - The remaining area of the pipeline corridor (if any) shall only be disturbed by compressing the vegetation. (*Compressing can be caused by vehicle tires, placement of equipment, etc.*)

8. The operator shall stockpile an adequate amount of topsoil where blading is allowed. The topsoil to be stripped is approximately ___6___ inches in depth. The topsoil will be segregated from other spoil piles from trench construction. The topsoil will be evenly distributed over the bladed area for the preparation of seeding.

9. Vegetation, soil, and rocks left as a result of construction or maintenance activity will be randomly scattered on this pipeline corridor and will not be left in rows, piles, or berms, unless otherwise approved by the Authorized Officer. The entire pipeline corridor shall be recontoured to match the surrounding landscape. The backfilled soil shall be compacted, and a 6-inch berm will be left over the ditch line to allow for settling back to grade.

10. The pipeline will be identified by signs at the point of origin and completion of the pipeline corridor and at all road crossings. At a minimum, signs will state the operator's name, BLM serial number, and the product being transported. All signs and information thereon will be posted in a permanent, conspicuous manner, and will be maintained in a legible condition for the life of the pipeline.

11. The operator shall not use the pipeline route as a road for purposes other than routine maintenance as determined necessary by the Authorized Officer in consultation with the operator before maintenance begins. The operator will take whatever steps are necessary to ensure that the pipeline route is not used as a roadway. As determined necessary during the life of the pipeline, the Authorized Officer may ask the operator to construct temporary deterrence structures.

12. The operator shall be held responsible if noxious weeds become established within the areas of operations. Weed control shall be required on the disturbed land where noxious weeds exist, which includes associated roads, pipeline corridor and adjacent land affected by the establishment of weeds due to this action. The operator shall consult with the Authorized Officer for acceptable weed control methods, which include following EPA and BLM requirements and policies.

13. Escape Ramps - The operator will construct and maintain pipeline/utility trenches [that are not otherwise fenced, screened, or netted] to prevent livestock, wildlife, and humans from becoming entrapped. At a minimum, the operator will construct and maintain escape ramps, ladders, or other methods of avian and terrestrial wildlife escape in the trenches according to the following criteria:
    a. Any trench left open for eight (8) hours or less is not required to have escape ramps; however, before the trench is backfilled, the contractor/operator shall inspect the trench for wildlife, remove all trapped wildlife, and release them alive at least 100 yards from the trench.

b. For trenches left open for eight (8) hours or more, earthen escape ramps (built at no more than a 30-degree slope and spaced no more than 500 feet apart) shall be placed in the trench. Before the trench is backfilled, the contractor/operator shall inspect the trench for wildlife, remove all trapped wildlife, and release them alive at least 100 yards from the trench.

4.3 SURFACE PIPELINES

A copy of the APD and attachments, including stipulations, survey plat(s) and/or map(s), shall be on location during construction. BLM personnel may request to review a copy of your permit during construction to ensure compliance with all stipulations.

Operator agrees to comply with the following stipulations to the satisfaction of the Authorized Officer:

1. Operator shall indemnify the United States against any liability for damage to life or property arising from the occupancy or use of public lands under this APD.

2. Operator shall comply with all applicable Federal laws and regulations existing or hereafter enacted or promulgated. In any event, Operator shall comply with the Toxic Substances Control Act of 1976 as amended, 15 USC § 2601 et seq. (1982) with regard to any toxic substances that are used, generated by or stored on the pipeline corridoror on facilities authorized under this APD (see 40 CFR, Part 702-799 and in particular, provisions on polychlorinated biphenyls, 40 CFR 761.1-761.193). Additionally, any release of toxic substances (leaks, spills, etc.) in excess of the reportable quantity established by 40 CFR, Part 117 shall be reported as required by the Comprehensive Environmental Response, Compensation, and Liability Act, section 102b. A copy of any report required or requested by any Federal agency or State government as a result of a reportable release or spill of any toxic substances shall be furnished to the Authorized Officer concurrent with the filing of the reports to the involved Federal agency or State government.

3. Operator agrees to indemnify the United States against any liability arising from the release of any hazardous substance or hazardous waste (as these terms are defined in the Comprehensive Environmental Response, Compensation and Liability Act of 1980, 42 U.S.C. § 9601, et seq. or the Resource Conservation and Recovery Act, 42 U.S.C. 6901, et seq.) on the Pipeline corridor (unless the release or threatened release is wholly unrelated to activity of the Operator's activity on the Pipeline corridor), or resulting from the activity of the Operator on the pipeline corridor. This provision applies without regard to whether a release is caused by Operator, its agent, or unrelated third parties.

4. Operator shall be liable for damage or injury to the United States to the extent provided by 43 CFR Sec. 2883.1-4. Operator shall be held to a standard of strict liability for damage or injury to the United States resulting from pipe rupture, fire, or spills caused or substantially aggravated by any of the following within the pipeline corridor or permit area:

    a. Activities of Operator including, but not limited to: construction, operation, maintenance, and termination of the facility;

    b. Activities of other parties including, but not limited to:
        (1) Land clearing
        (2) Earth-disturbing and earth-moving work
        (3) Blasting
        (4) Vandalism and sabotage

    c. Acts of God.

The maximum limitation for such strict liability damages shall not exceed one million dollars ($1,000,000) for any one event, and any liability in excess of such amount shall be determined by the ordinary rules of negligence of the jurisdiction in which the damage or injury occurred.

This section shall not impose strict liability for damage or injury resulting primarily from an act of war or from the negligent acts or omissions of the United States.

5. If, during any phase of the construction, operation, maintenance, or termination of the pipeline, any oil, salt water, or other pollutant is discharged from the pipeline system, impacting Federal lands, the control and total removal, disposal, and cleaning up of such oil, salt water, or other pollutant, wherever found, shall be the responsibility of Operator, regardless of fault. Upon failure of Operator to control, dispose of, or clean up such discharge on or affecting Federal lands, or to repair all damages resulting therefrom, on the Federal lands, the Authorized Officer may take such measures as they deem necessary to control and clean up the discharge and restore the area, including, where appropriate, the aquatic environment and fish and wildlife habitats, at the full expense of Operator. Such action by the Authorized Officer shall not relieve Operator of any responsibility as provided herein.

6. All construction and maintenance activity shall be confined to the authorized pipeline corridor width of 30-feet. If the pipeline route follows an existing road or buried pipeline corridor, the surface pipeline shall be installed no farther than 10 feet from the edge of the road or buried pipeline corridor. If existing surface pipelines prevent this distance, the proposed surface pipeline shall be installed immediately adjacent to the outer surface pipeline. All construction and maintenance activity shall be confined to existing roads or pipeline corridors.

7. No blading or clearing of any vegetation shall be allowed unless approved in writing by the Authorized Officer.

8. Operator shall install the pipeline on the surface in such a manner that will minimize suspension of the pipeline across low areas in the terrain. In hummocky of duney areas, the pipeline shall be "snaked" around hummocks and dunes rather than suspended across these features.

9. The pipeline shall be buried with a minimum of 6 inches under all roads, "two-tracks," and trails. Burial of the pipe will continue for 20 feet on each side of each crossing. The condition of the road, upon completion of construction, shall be returned to at least its former state with no bumps or dips remaining in the road surface.

10. The operator shall minimize disturbance to existing fences and other improvements on public lands. The operator is required to promptly repair improvements to at least their former state. Functional use of these improvements will be maintained at all times. The operator will contact the owner of any improvements prior to disturbing them. When necessary to pass through a fence line, the fence shall be braced on both sides of the passageway prior to cutting of the fence. No permanent gates will be allowed unless approved by the Authorized Officer.

11. In those areas where erosion control structures are required to stabilize soil conditions, the operator will install such structures as are suitable for the specific soil conditions being encountered and which are in accordance with sound resource management practices.

12. Excluding the pipe, all above-ground structures not subject to safety requirement shall be painted by the operator to blend with the natural color of the landscape. The paint used shall be a color which simulates "Standard Environmental Colors" – Shale Green, Munsell Soil Color No. 5Y 4/2; designated by the Rocky Mountain Five State Interagency Committee.

13. The pipeline will be identified by signs at the point of origin and completion of the pipeline corridor and at all road crossings. At a minimum, signs will state the operator's name, BLM serial number, and the product being transported. Signs will be maintained in a legible condition for the life of the pipeline.

14. The operator shall not use the pipeline route as a road for purposes other than routine maintenance as determined necessary by the Authorized Officer in consultation with the operator. The operator will take whatever steps are necessary to ensure that the pipeline route is not used as a roadway.

15. The operator shall be held responsible if noxious weeds become established within the areas of operations. Weed control shall be required on the disturbed land where noxious weeds exist, which includes the roads, powerline corridor, and adjacent land affected by the establishment of weeds due to this action. The operator shall consult with the Authorized Officer for acceptable weed control methods, which include following EPA and BLM requirements and policies.

16. Surface pipelines shall be less than or equal to 4 inches and a working pressure below 125 psi.

4.4 OVERHEAD ELECTRIC LINES

A copy of the APD and attachments, including stipulations, survey plat and/or map, will be on location during construction. BLM personnel may request to you a copy of your permit during construction to ensure compliance with all stipulations.

Operator agrees to comply with the following stipulations to the satisfaction of the Authorized Officer:

1. The operator shall indemnify the United States against any liability for damage to life or property arising from the occupancy or use of public lands under this APD.
2. The operator shall comply with all applicable Federal laws and regulations existing or hereafter enacted or promulgated. In any event, the operator shall comply with the Toxic Substances Control Act of 1976 as amended, 15 USC 2601 et seq. (1982) with regards to any toxic substances that are used, generated by or stored on the powerline corridor or on facilities authorized under this powerline corridor. (See 40 CFR, Part 702-799 and especially, provisions on polychlorinated biphenyls, 40 CFR 761.1-761.193.) Additionally, any release of toxic substances (leaks, spills, etc.) in excess of the reportable quantity established by 40 CFR, Part 117 shall be reported as required by the Comprehensive Environmental Response, Compensation, and Liability Act, section 102b. A copy of any report required or requested by any Federal agency or State government as a result of a reportable release or spill of any toxic substances shall be furnished to the authorized officer concurrent with the filing of the reports to the involved Federal agency or State government.
3. The operator agrees to indemnify the United States against any liability arising from the release of any hazardous substance or hazardous waste (as these terms are defined in the Comprehensive Environmental Response, Compensation and Liability Act of 1980, 42 U.S.C. 9601, et seq. or the Resource Conservation and Recovery Act, 42 U.S.C. 6901, et seq.) on the Powerline corridor(unless the release or threatened release is wholly unrelated to the operator's activity on the powerline corridor), or resulting from the activity of the Operator on the powerline corridor. This agreement applies without regard to whether a release is caused by the operator, its agent, or unrelated third parties.
4. There will be no clearing or blading of the powerline corridor unless otherwise agreed to in writing by the Authorized Officer.
5. Power lines shall be constructed and designed in accordance to standards outlined in "Suggested Practices for Avian Protection on Power lines: The State of the Art in 2006" Edison Electric Institute, APLIC, and the California Energy Commission 2006 . The operator shall assume the burden and expense of proving that pole designs not shown in the above publication deter raptor perching, roosting, and nesting. Such proof shall be provided by a raptor expert approved by the Authorized Officer. The BLM reserves the right to require modification or additions to all powerline structures placed on this powerline corridor, should they be necessary to ensure the safety of large perching birds. Such modifications and/or additions shall be made by the operator without liability or expense to the United States.

6. Raptor deterrence will consist of but not limited to the following: triangle perch discouragers shall be placed on each side of the cross arms and a nonconductive perching deterrence shall be placed on all vertical poles that extend past the cross arms.
7. The operator shall minimize disturbance to existing fences and other improvements on public lands. The operator is required to promptly repair improvements to at least their former state. Functional use of these improvements will be maintained at all times. The operator will contact the owner of any improvements prior to disturbing them. When necessary to pass through a fence line, the fence shall be braced on both sides of the passageway prior to cutting the fence. No permanent gates will be allowed unless approved by the Authorized Officer.
8. The BLM serial number assigned to this authorization shall be posted in a permanent, conspicuous manner where the power line crosses roads and at all serviced facilities. Numbers will be at least two inches high and will be affixed to the pole nearest the road crossing and at the facilities served.
9. Upon cancellation, relinquishment, or expiration of this APD, the operator shall comply with those abandonment procedures as prescribed by the Authorized Officer.
10. All surface structures (poles, lines, transformers, etc.) shall be removed within 180 days of abandonment, relinquishment, or termination of use of the serviced facility or facilities or within 180 days of abandonment, relinquishment, cancellation, or expiration of this APD, whichever comes first. This will not apply where the power line extends service to an active, adjoining facility or facilities.
11. Special Stipulations:
    - For reclamation remove poles, lines, transformer, etc. and dispose of properly. Fill in any holes from the poles removed.
12. Karst stipulations for overhead electric lines
    - Smaller powerlines will be routed around sinkholes and other karst features to avoid or lessen the possibility of encountering near surface voids and to minimize changes to runoff or possible leaks and spills from entering karst systems. Larger powerlines will adjust their pole spacing to avoid cave and karst features.
    - The BLM, Carlsbad Field Office, will be informed immediately if any subsurface drainage channels, cave passages, or voids are penetrated during construction.
    - No further construction will be done until clearance has been issued by the Authorized Officer.
    - Special restoration stipulations or realignment may be required.

4.5 RANGELAND MITIGATION FOR PIPELINES

4.5.1 **Fence Requirement**

Where entry is granted across a fence line, the fence must be braced and tied off on both sides of the passageway with H-braces prior to cutting. Once the work is completed, the fence will be restored to its prior condition, or better. The operator shall notify the private surface landowner or the grazing allotment operator prior to crossing any fence(s).

4.5.2 **Cattleguards**

An appropriately sized cattleguard(s) sufficient to carry out the project shall be installed and maintained at road-fence crossing(s). Any existing cattleguard(s) on the access road shall be repaired or replaced if they are damaged or have deteriorated beyond practical use. The operator shall be responsible for the condition of the existing cattleguard(s) that are in place and are utilized during lease operations. A gate shall be constructed on one side of the cattleguard and fastened securely to H-braces.

4.5.3 **Livestock Watering Requirement**

Structures that provide water to livestock, such as windmills, pipelines, drinking troughs, and earthen reservoirs, will be avoided by moving the proposed action.

Any damage to structures that provide water to livestock throughout the life of the well, caused by operations from the well site, must be immediately corrected by the operator. The operator must notify the BLM office (575-234-5972) and the private surface landowner or the grazing allotment operator if any damage occurs to structures that provide water to livestock.

- Livestock operators will be contacted, and adequate crossing facilities will be provided as needed to ensure livestock are not prevented from reaching water sources because of the open trench.
- Wildlife and livestock trails will remain open and passable by adding soft plugs (areas where the trench is excavated and replaced with minimal compaction) during the construction phase. Soft plugs with ramps on either side will be left at all well-defined livestock and wildlife trails along the open trench to allow passage across the trench and provide a means of escape for livestock and wildlife that may enter the trench.
- Trenches will be backfilled as soon as feasible to minimize the amount of open trench. The Operator will avoid leaving trenches open overnight to the extent possible and open trenches that cannot be backfilled immediately will have escape ramps (wooden) placed at no more than 2,500 feet intervals and sloped no more than 45 degrees.

5. PRODUCTION (POST DRILLING)

5.1 WELL STRUCTURES & FACILITIES

5.1.1 **Placement of Production Facilities**

Production facilities must be placed on the well pad to allow for maximum interim recontouring and revegetation of the well location.

5.1.2 **Exclosure Netting (Open-top Tanks)**

Immediately following active drilling or completion operations, the operator will take actions necessary to prevent wildlife and livestock access, including avian wildlife, to all open-topped tanks that contain or have the potential to contain salinity sufficient to cause harm to wildlife or livestock, hydrocarbons, or Resource Conservation and Recovery Act of 1976-exempt hazardous substances. At a minimum, the operator will net, screen, or cover open-topped tanks to exclude wildlife and livestock and prevent mortality. If the operator uses netting, the operator will cover and secure the open portion of the tank to prevent wildlife entry. The operator will net, screen, or cover the tanks until the operator removes the tanks from the location or the tanks no longer contain substances that could be harmful to wildlife or livestock. Use a maximum netting mesh size of 1 ½ inches. The netting must not be in contact with fluids and must not have holes or gaps.

5.1.3. Chemical and Fuel Secondary Containment and Exclosure Screening

The operator will prevent all hazardous, poisonous, flammable, and toxic substances from coming into contact with soil and water. At a minimum, the operator will install and maintain an impervious secondary containment system for any tank or barrel containing hazardous, poisonous, flammable, or toxic substances sufficient to contain the contents of the tank or barrel and any drips, leaks, and anticipated precipitation. The operator will dispose of fluids within the containment system that do not meet applicable state or U. S. Environmental Protection Agency livestock water standards in accordance with state law; the operator must not drain the fluids to the soil or ground. The operator will design, construct, and maintain all secondary containment systems to prevent wildlife and livestock exposure to harmful substances. At a minimum, the operator will install effective wildlife and livestock exclosure systems such as fencing, netting, expanded metal mesh, lids, and grate covers. Use a maximum netting mesh size of 1 ½ inches.

5.1.4. Open-Vent Exhaust Stack Exclosures

The operator will construct, modify, equip, and maintain all open-vent exhaust stacks on production equipment to prevent birds and bats from entering, and to discourage perching, roosting, and nesting. (*Recommended exclosure structures on open-vent exhaust stacks are in the shape of a cone*.) Production equipment includes, but may not be limited to, tanks, heater-treaters, separators, dehydrators, flare stacks, in-line units, and compressor mufflers.

5.1.5. Containment Structures

Proposed production facilities such as storage tanks and other vessels will have a secondary containment structure that is constructed to hold the capacity of 1.5 times the largest tank, plus freeboard to account for precipitation, unless more stringent protective requirements are deemed necessary.

6. RECLAMATION

Stipulations required by the Authorized Officer on specific actions may differ from the following general guidelines

6.1 ROAD AND SITE RECLAMATION

Any roads constructed during the life of the well will have the caliche removed or linear burial. If contaminants are indicated then testing will be required for chlorides and applicable contaminate anomalies for final disposal determination (disposed of in a manner approved by the Authorized Officer within Federal, State and Local statutes, regulations, and ordinances) and seeded to the specifications in sections 6.5 and 6.6.

6.2 EROSION CONTROL

Install erosion control berms, windrows, and hummocks. Windrows must be level and constructed perpendicular to down-slope drainage; steeper slopes will require greater windrow density. Topsoil between windrows must be ripped to a depth of at least 12”, unless bedrock is encountered. Any large boulders pulled up during ripping must be deep-buried on location. Ripping must be perpendicular to down-slope. The surface must be left rough in order to catch and contain rainfall on-site. Any trenches resulting from erosion cause by run-off shall be addressed immediately.

6.3 INTERIM RECLAMATION

During the life of the development, all disturbed areas not needed for active support of production operations must undergo interim reclamation in order to minimize the environmental impacts of development on other resources and uses.

Within six (6) months of well completion, operators must work with BLM surface protection specialists (BLM_NM_CFO_Construction_Reclamation@blm.gov) to devise the best strategies to reduce the size of the location. Interim reclamation must allow for remedial well operations, as well as safe and efficient removal of oil and gas.

During reclamation, the removal of caliche and any other surface material is required. Removed caliche that is free of contaminants may be used for road repairs, fire walls or for building other roads and locations. In order to operate the well or complete workover operations, it may be necessary to drive, park and operate on restored interim vegetation within the previously disturbed area. Disturbing revegetated areas for production or workover operations will be allowed. If there is significant disturbance and loss of vegetation, the area will need to be revegetated. Communicate with the appropriate BLM office for any exceptions/exemptions if needed.

All disturbed areas after they have been satisfactorily prepared need to be reseeded with the seed mixture provided in section 6.6.

Upon completion of interim reclamation, the operator shall submit a Sundry Notice, Subsequent Report of Reclamation (Form 3160-5).

6.4 FINAL ABANDONMENT & RECLAMATION

Prior to surface abandonment, the operator shall submit a Notice of Intent Sundry Notice and reclamation plan.

At final abandonment, well locations, production facilities, and access roads must undergo "final" reclamation so that the character and productivity of the land are restored.

Earthwork for final reclamation must be completed within six (6) months of well plugging. All pads, pits, facility locations and roads must be reclaimed to a satisfactory revegetated, safe, and stable condition, unless an agreement is made with the landowner or BLM to keep the road and/or pad intact.

After all disturbed areas have been satisfactorily prepared, these areas need to be revegetated with the seed mixture provided below. Seeding will be accomplished by drilling on the contour whenever practical or by other approved methods. Seeding may need to be repeated until revegetation is successful, as determined by the BLM. After earthwork and seeding is completed, the operator is required to submit a Sundry Notice, Subsequent Report of Reclamation.

Operators shall contact a BLM surface protection specialist prior to surface abandonment operations for site specific objectives (BLM_NM_CFO_Construction_Reclamation@blm.gov).

6.5 SEEDING TECHNIQUES

Seeds shall be hydro-seeded, mechanically drilled, or broadcast, with the broadcast-seeded area raked, ripped or dragged to aid in covering the seed. The seed mixture shall be evenly and uniformly planted over the disturbed area.

6.6 SOIL SPECIFIC SEED MIXTURE

The lessee/permitee shall seed all disturbed areas with the seed mixture listed below. The seed mixture shall be planted in the amounts specified in pounds of pure live seed (PLS)* per acre. There shall be no primary or secondary noxious weeds in the seed mixture. Seed will be tested and the viability testing of seed will be done in accordance with State law(s) and within nine (9) months prior to purchase. Commercial seed will be either certified or registered seed. The seed container will be tagged in accordance with State law(s) and available for inspection by the Authorized Officer.

Seed land application will be accomplished by mechanical planting using a drill equipped with a depth regulator to ensure proper depth of planting where drilling is possible. The seed mixture will be evenly and uniformly planted over the disturbed area. Smaller/heavier seeds tend to drop the bottom of the drill and are planted first; the operator shall take appropriate measures to ensure this does not occur. Where drilling is not possible, seed will be broadcast and the area shall be raked or chained to cover the seed. When broadcasting the seed, the pounds per acre are to be doubled. The seeding will be repeated until a satisfactory BLM or Soil Conservation

District stand is established as determined by the Authorized Officer. Evaluation of growth will not be made before completion of at least one full growing season after seeding or until several months of precipitation have occurred, enabling a full four months of growth, with one or more seed generations being established.

Seed Mixture #2 for LPC Sand/Shinnery Sites

Species to be planted in pounds of pure live seed* per acre:

Species	lb/acre
Plains Bristlegrass	5lbs/A
Sand Bluestem	5lbs/A
Little Bluestem	3lbs/A
Big Bluestem	6lbs/A
Plains Coreopsis	2lbs/A
Sand Dropseed	1lbs/A

*Pounds of pure live seed:

Pounds of seed **x** percent purity **x** percent germination = pounds pure live seed

Approval Date: 03/05/2025

PECOS DISTRICT
DRILLING CONDITIONS OF APPROVAL

OPERATOR'S NAME:	EOG RESOURCES INCORPORATED
WELL NAME & NO.:	NEVER BETTER 14 FED COM 723H
LOCATION:	Section 14, T.22 S., R.32 E., NMP
COUNTY:	Lea County, New Mexico

COA

H2S	(•) Yes	( ) No	
Potash	(•) None	( ) Secretary	( ) R-111-P
Cave/Karst Potential	(•) Low	( ) Medium	( ) High
Cave/Karst Potential	( ) Critical		
Variance	( ) None	(•) Flex Hose	( ) Other
Wellhead	( ) Conventional	(•) Multibowl	( ) Both
Wellhead Variance	( ) Diverter		
Other	[ ] 4 String	[ ] Capitan Reef	[ ] WIPP
Other	[ ] Fluid Filled	[ ] Pilot Hole	[ ] Open Annulus
Cementing	[ ] Contingency Cement Squeeze	[x] EchoMeter	[x] Primary Cement Squeeze
Special Requirements	[ ] Water Disposal	[x] COM	[ ] Unit
Special Requirements	[ ] Batch Sundry		
Special Requirements Variance	[x] Break Testing	[x] Offline Cementing	[x] Casing Clearance

A. HYDROGEN SULFIDE

A Hydrogen Sulfide (H2S) Drilling Plan shall be activated AT SPUD. As a result, the Hydrogen Sulfide area must meet 43 CFR part 3170 requirements, which includes equipment and personnel/public protection items. If Hydrogen Sulfide is encountered, please provide measured values and formations to the BLM.

B. CASING

Casing Design A:

1. The **9-5/8** inch surface casing shall be set at approximately **1100 feet** (a minimum of **25 feet (Lea County)** into the Rustler Anhydrite, above the salt, and below usable fresh water) and cemented to the surface. The surface hole shall be **12-1/4** inch in diameter.

    a. If cement does not circulate to the surface, the appropriate BLM office shall

be notified and a temperature survey utilizing an electronic type temperature survey with surface log readout will be used or a cement bond log shall be run to verify the top of the cement. Temperature survey will be run a minimum of six hours after pumping cement and ideally between 8-10 hours after completing the cement job.

b. Wait on cement (WOC) time for a primary cement job will be a minimum of **8 hours** or 500 pounds compressive strength, whichever is greater. (This is to include the lead cement)
c. Wait on cement (WOC) time for a remedial job will be a minimum of 4 hours after bringing cement to surface or 500 pounds compressive strength, whichever is greater.
d. If cement falls back, remedial cementing will be done prior to drilling out that string.

2. The minimum required fill of cement behind the **7-5/8** inch intermediate casing is:
    - Cement to surface. If cement does not circulate see B.1.a, c-d above. **Wait on cement (WOC) time for a primary cement job is to include the tail cement slurry due to cave/karst or potash.**

Operator has proposed to pump down 9-5/8" X 7-5/8" annulus after primary cementing stage. Operator must run Echo-meter to verify Cement Slurry/Fluid top in the annulus Or operator shall run a CBL from TD of the 7-5/8" casing to surface after the second stage BH to verify TOC.

Submit results to the BLM. No displacement fluid/wash out shall be utilized at the top of the cement slurry between second stage BH and top out. Operator must run one CBL per Well Pad.

If cement does not reach surface, the next casing string must come to surface.

Operator must use a limited flush fluid volume of 1 bbl following backside cementing procedures.

3. The minimum required fill of cement behind the **5-1/2** inch production casing is:
    - Cement should tie-back at least **200 feet** into previous casing string due to operator not meeting casing clearance requirement per 43 CFR 3170. Operator shall provide method of verification.

Casing Design B:

4. The **10-3/4** inch surface casing shall be set at approximately **1100 feet** (a minimum of **25 feet (Lea County)** into the Rustler Anhydrite, above the salt, and below usable fresh water) and cemented to the surface. The surface hole shall be **12-1/4** inch in diameter.

e. If cement does not circulate to the surface, the appropriate BLM office shall

be notified and a temperature survey utilizing an electronic type temperature survey with surface log readout will be used or a cement bond log shall be run to verify the top of the cement. Temperature survey will be run a minimum of six hours after pumping cement and ideally between 8-10 hours after completing the cement job.

f. Wait on cement (WOC) time for a primary cement job will be a minimum of **8 hours** or 500 pounds compressive strength, whichever is greater. (This is to include the lead cement)
g. Wait on cement (WOC) time for a remedial job will be a minimum of 4 hours after bringing cement to surface or 500 pounds compressive strength, whichever is greater.
h. If cement falls back, remedial cementing will be done prior to drilling out that string.

5. The minimum required fill of cement behind the **8-3/4** inch intermediate casing is:
    - Cement to surface. If cement does not circulate see B.1.a, c-d above. **Wait on cement (WOC) time for a primary cement job is to include the tail cement slurry due to cave/karst or potash.**

Intermediate casing must be kept fluid filled to meet BLM minimum collapse requirement.

Operator has proposed to pump down 10-3/4" X 8-3/4" annulus after primary cementing stage. Operator must run Echo-meter to verify Cement Slurry/Fluid top in the annulus Or operator shall run a CBL from TD of the 8-3/4" casing to surface after the second stage BH to verify TOC.

Submit results to the BLM. No displacement fluid/wash out shall be utilized at the top of the cement slurry between second stage BH and top out. Operator must run one CBL per Well Pad.

If cement does not reach surface, the next casing string must come to surface.

Operator must use a limited flush fluid volume of 1 bbl following backside cementing procedures.

6. The minimum required fill of cement behind the **6** inch production casing is:
    - Cement should tie-back at least **200 feet** into previous casing string due to operator not meeting casing clearance requirement per 43 CFR 3170. Operator shall provide method of verification.

C. PRESSURE CONTROL

1. Variance approved to use flex line from BOP to choke manifold. Manufacturer's specification to be readily available. No external damage to flex line. Flex line to be installed as straight as possible (no hard bends).'

2. Operator has proposed a multi-bowl wellhead assembly. This assembly will only be tested when installed on the **9-5/8** inch surface casing. Minimum working pressure of the blowout preventer (BOP) and related equipment (BOPE) required for drilling below the surface casing shoe shall be **10,000 (10M)** psi. **Variance is approved to use a 5000 (5M) Annular which shall be tested to 3500 (70% Working Pressure) psi.**

    a. Wellhead shall be installed by manufacturer's representatives, submit documentation with subsequent sundry.
    b. If the welding is performed by a third party, the manufacturer's representative shall monitor the temperature to verify that it does not exceed the maximum temperature of the seal.
    c. Manufacturer representative shall install the test plug for the initial BOP test.
    d. If the cement does not circulate and one inch operations would have been possible with a standard wellhead, the well head shall be cut off, cementing operations performed and another wellhead installed.
    e. Whenever any seal subject to test pressure is broken, all the tests in **43 CFR 3172.6(b)(9)** must be followed.

(Note: For a minimum 5M BOPE or less (Utilizing a 10M BOPE system)
BOPE Break Testing Variance

- BOPE Break Testing is ONLY permitted for 5M BOPE or less. **(Annular preventer must be tested to a minimum of 70% of BOPE working pressure and shall be higher than the MASP)**
- BOPE Break Testing is NOT permitted to drilling the production hole section.
- Variance only pertains to the intermediate hole-sections and no deeper than the Bone Springs formation.
- While in transfer between wells, the BOPE shall be secured by the hydraulic carrier or cradle.
- Any well control event while drilling require notification to the BLM Petroleum Engineer **(575-706-2779)** prior to the commencement of any BOPE Break Testing operations.
- A full BOPE test is required prior to drilling the first deep intermediate hole section. If any subsequent hole interval is deeper than the first, a full BOPE test will be required. (200' TVD tolerance between intermediate shoes is allowable).
- The BLM is to be contacted (575-689-5981 Lea County) 4 hours prior to BOPE tests.
- As a minimum, a full BOPE test shall be performed at 21-day intervals.
- In the event any repairs or replacement of the BOPE is required, the BOPE shall test as per Onshore Oil and Gas Order No. 2.
- If in the event break testing is not utilized, then a full BOPE test would be conducted.

D. SPECIAL REQUIREMENT (S)

Casing Clearance:
Operator casing variance is approved for the utilization of

- Annular clearance to meet or exceed 0.422'' between intermediate casing ID and production casing coupling only on the first 500' overlap between both casing strings.

-Annular clearance less than 0.422'' is acceptable for the production open hole section.

Operator shall clean up cycles until wellbore is clear of cuttings and any large debris, ensure cutting sizes are adequate "coffee ground or less" before cementing.

Offline Cementing:
Contact the BLM prior to the commencement of any offline cementing procedure.

GENERAL REQUIREMENTS

The BLM is to be notified in advance for a representative to witness:

a. Spudding well (minimum of 24 hours)
b. Setting and/or Cementing of all casing strings (minimum of 4 hours)
c. BOPE tests (minimum of 4 hours)

☒ Eddy County
EMAIL or call the Carlsbad Field Office, 620 East Greene St., Carlsbad, NM 88220,
BLM_NM_CFO_DrillingNotifications@BLM.GOV
(575) 361-2822

☒ Lea County
Call the Hobbs Field Station, 414 West Taylor, Hobbs NM 88240,
(575) 689-5981

1. Unless the production casing has been run and cemented or the well has been properly plugged, the drilling rig shall not be removed from over the hole without prior approval.
    a. In the event the operator has proposed to drill multiple wells utilizing a skid/walking rig. Operator shall secure the wellbore on the current well, after installing and testing the wellhead, by installing a blind flange of like pressure rating to the wellhead and a pressure gauge that can be monitored while drilling is performed on the other well(s).

b. When the operator proposes to set surface casing with Spudder Rig
    i. Notify the BLM when moving in and removing the Spudder Rig.
    ii. Notify the BLM when moving in the 2nd Rig. Rig to be moved in within 90 days of notification that Spudder Rig has left the location.
    iii. BOP/BOPE test to be conducted per **43 CFR 3172** as soon as 2nd Rig is rigged up on well.

2. Floor controls are required for 3M or Greater systems. These controls will be on the rig floor, unobstructed, readily accessible to the driller and will be operational at all times during drilling and/or completion activities. Rig floor is defined as the area immediately around the rotary table; the area immediately above the substructure on which the draw works are located, this does not include the dog house or stairway area.
3. For intervals in which cement to surface is required, cement to surface should be verified with a visual check and density or pH check to differentiate cement from spacer and drilling mud. The results should be documented in the driller's log and daily reports.

A. CASING

1. Changes to the approved APD casing program need prior approval if the items substituted are of lesser grade or different casing size or are Non-API. The Operator can exchange the components of the proposal with that of superior strength (i.e. changing from J-55 to N-80, or from 36# to 40#). Changes to the approved cement program need prior approval if the altered cement plan has less volume or strength or if the changes are substantial (i.e. Multistage tool, ECP, etc.). The initial wellhead installed on the well will remain on the well with spools used as needed.
2. Wait on cement (WOC) for Potash Areas: After cementing but before commencing any tests, the casing string shall stand cemented under pressure until both of the following conditions have been met: 1) cement reaches a minimum compressive strength of 500 psi for all cement blends of both lead and tail cement, 2) until cement has been in place at least 8 hours. WOC time will be recorded in the driller's log. The casing integrity test can be done (prior to the cement setting up) immediately after bumping the plug.
3. Wait on cement (WOC) for Water Basin: After cementing but before commencing any tests, the casing string shall stand cemented under pressure until both of the following conditions have been met: 1) cement

reaches a minimum compressive strength of 500 psi at the shoe, 2) until cement has been in place at least 8 hours. WOC time will be recorded in the driller's log. See individual casing strings for details regarding lead cement slurry requirements. The casing integrity test can be done (prior to the cement setting up) immediately after bumping the plug.

4. Provide compressive strengths including hours to reach required 500 pounds compressive strength prior to cementing each casing string. Have well specific cement details onsite prior to pumping the cement for each casing string.
5. No pea gravel permitted for remedial or fall back remedial without prior authorization from the BLM engineer.
6. On that portion of any well approved for a 5M BOPE system or greater, a pressure integrity test of each casing shoe shall be performed. Formation at the shoe shall be tested to a minimum of the mud weight equivalent anticipated to control the formation pressure to the next casing depth or at total depth of the well. This test shall be performed before drilling more than 20 feet of new hole.
7. If hardband drill pipe is rotated inside casing, returns will be monitored for metal. If metal is found in samples, drill pipe will be pulled and rubber protectors which have a larger diameter than the tool joints of the drill pipe will be installed prior to continuing drilling operations.
8. Whenever a casing string is cemented in the R-111-Q potash area, the NMOCD requirements shall be followed.

B. PRESSURE CONTROL

1. All blowout preventer (BOP) and related equipment (BOPE) shall comply with well control requirements as described in **43 CFR 3172**.
2. If a variance is approved for a flexible hose to be installed from the BOP to the choke manifold, the following requirements apply: The flex line must meet the requirements of API 16C. Check condition of flexible line from BOP to choke manifold, replace if exterior is damaged or if line fails test. Line to be as straight as possible with no hard bends and is to be anchored according to Manufacturer's requirements. The flexible hose can be exchanged with a hose of equal size and equal or greater pressure rating. Anchor requirements, specification sheet and hydrostatic pressure test certification matching the hose in service, to be onsite for review. These documents shall be posted in the company man's trailer and on the rig floor.

3. 5M or higher system requires an HCR valve, remote kill line and annular to match. The remote kill line is to be installed prior to testing the system and tested to stack pressure.
4. If the operator has proposed a multi-bowl wellhead assembly in the APD. The following requirements must be met:
    i. Wellhead shall be installed by manufacturer's representatives, submit documentation with subsequent sundry.
    ii. If the welding is performed by a third party, the manufacturer's representative shall monitor the temperature to verify that it does not exceed the maximum temperature of the seal.
    iii. Manufacturer representative shall install the test plug for the initial BOP test.
    iv. Whenever any seal subject to test pressure is broken, all the tests in 43 CFR 3172.6(b)(9) must be followed.
    v. If the cement does not circulate and one inch operations would have been possible with a standard wellhead, the well head shall be cut off, cementing operations performed and another wellhead installed.
5. The appropriate BLM office shall be notified a minimum of 4 hours in advance for a representative to witness the tests.
    i. In a water basin, for all casing strings utilizing slips, these are to be set as soon as the crew and rig are ready and any fallback cement remediation has been done. The casing cut-off and BOP installation can be initiated four hours after installing the slips, which will be approximately six hours after bumping the plug. For those casing strings not using slips, the minimum wait time before cut-off is eight hours after bumping the plug. BOP/BOPE testing can begin after cut-off or once cement reaches 500 psi compressive strength (including lead cement), whichever is greater. However, if the float does not hold, cut-off cannot be initiated until cement reaches 500 psi compressive strength (including lead when specified).
    ii. In potash areas, for all casing strings utilizing slips, these are to be set as soon as the crew and rig are ready and any fallback cement remediation has been done. For all casing strings, casing cut-off and BOP installation can be initiated at twelve hours after bumping the cement plug. The BOPE test can be initiated after bumping the cement plug with the casing valve open. (only applies to single stage cement jobs, prior to the cement setting up.)

iii. The tests shall be done by an independent service company utilizing a test plug not a cup or J-packer and can be initiated immediately with the casing valve open. The operator also has the option of utilizing an independent tester to test without a plug (i.e. against the casing) pursuant to **43 CFR 3172** with the pressure not to exceed 70% of the burst rating for the casing. Any test against the casing must meet the WOC time for 8 hours or 500 pounds compressive strength, whichever is greater, prior to initiating the test (see casing segment as lead cement may be critical item).

iv. The test shall be run on a 5000 psi chart for a 2-3M BOP/BOP, on a 10000 psi chart for a 5M BOP/BOPE and on a 15000 psi chart for a 10M BOP/BOPE. If a linear chart is used, it shall be a one hour chart. A circular chart shall have a maximum 2 hour clock. If a twelve hour or twenty-four hour chart is used, tester shall make a notation that it is run with a two hour clock.

v. The results of the test shall be reported to the appropriate BLM office.

vi. All tests are required to be recorded on a calibrated test chart. A copy of the BOP/BOPE test chart and a copy of independent service company test will be submitted to the appropriate BLM office.

vii. The BOP/BOPE test shall include a low pressure test from 250 to 300 psi. The test will be held for a minimum of 10 minutes if test is done with a test plug and 30 minutes without a test plug. This test shall be performed prior to the test at full stack pressure.

viii. BOP/BOPE must be tested by an independent service company within 500 feet of the top of the Wolfcamp formation if the time between the setting of the intermediate casing and reaching this depth exceeds 20 days. This test does not exclude the test prior to drilling out the casing shoe as per **43 CFR 3172**.

C. DRILLING MUD

Mud system monitoring equipment, with derrick floor indicators and visual and audio alarms, shall be operating before drilling into the Wolfcamp formation, and shall be used until production casing is run and cemented.

D. WASTE MATERIAL AND FLUIDS

All waste (i.e. drilling fluids, trash, salts, chemicals, sewage, gray water, etc.) created as a result of drilling operations and completion operations shall be safely contained and disposed of properly at a waste disposal facility. No waste material

or fluid shall be disposed of on the well location or surrounding area. Porto-johns and trash containers will be on-location during fracturing operations or any other crew-intensive operations.

JS 3/4/2025

AFMSS
U.S. Department of the Interior
BUREAU OF LAND MANAGEMENT

Operator Certification Data Report

09/09/2026

Operator

I hereby certify that I, or someone under my direct supervision, have inspected the drill site and access route proposed herein; that I am familiar with the conditions which currently exist; that I have full knowledge of state and Federal laws applicable to this operation; that the statements made in this APD package are, to the best of my knowledge, true and correct; and that the work associated with the operations proposed herein will be performed in conformity with this APD package and the terms and conditions under which it is approved. I also certify that I, or the company I represent, am responsible for the operations conducted under this application. These statements are subject to the provisions of 18 U.S.C. 1001 for the filing of false statements.

NAME: SHEA BAILEY **Signed on:** 05/07/2024

Title: Regulatory Contractor

Street Address: 5509 CHAMPIONS BLVD

City: MIDLAND **State:** TX **Zip:** 79707

Phone: (432)214-9797

Email address: SHEA_BAILEY@EOGRESOURCES.COM

Field

Representative Name:

Street Address:

City: **State:** **Zip:**

Phone:

Email address:

AFMSS
U.S. Department of the Interior
BUREAU OF LAND MANAGEMENT

Application Data
09/09/2026

APD ID: 10400098402
Submission Date: 05/08/2024
Operator Name: EOG RESOURCES INCORPORATED
Well Name: NEVER BETTER 14 FED COM
Well Number: 723H
Well Type: OIL WELL
Well Work Type: Drill

Highlighted data reflects the most recent changes
Show Final Text

Section 1 - General

APD ID: 10400098402
Tie to previous NOS?
Submission Date: 05/08/2024
BLM Office: Carlsbad
User: SHEA BAILEY
Title: Regulatory Contractor
Federal/Indian APD: FED
Is the first lease penetrated for production Federal or Indian? FED
Lease number: NMNM85937
Lease Acres: 800
Surface access agreement in place?
Allotted?
Reservation:
Agreement in place? NO
Federal or Indian agreement:
Agreement number:
Agreement name:
Keep application confidential? N
Permitting Agent? NO
APD Operator: EOG RESOURCES INCORPORATED
Operator letter of

Operator Info

Operator Organization Name: EOG RESOURCES INCORPORATED
Operator Address: 600 17TH STREET, SUITE 1000 N
Zip: 80202
Operator PO Box:
Operator City: DENVER
State: CO
Operator Phone: (303)262-9894
Operator Internet Address:

Section 2 - Well Information

Well in Master Development Plan? NO
Master Development Plan name:
Well in Master SUPO? NO
Master SUPO name:
Well in Master Drilling Plan? NO
Master Drilling Plan name:
Well Name: NEVER BETTER 14 FED COM
Well Number: 723H
Field/Pool or Exploratory? Field and Pool
Field Name: WC-025 G-09 S233216K
Pool Name: UPPER WOLFCAMP

Operator Name: EOG RESOURCES INCORPORATED

Well Name: NEVER BETTER 14 FED COM **Well Number:** 723H

Is the proposed well in an area containing other mineral resources? NATURAL GAS,OIL

Is the proposed well in a Helium production area? N **Use Existing Well Pad?** N **New surface disturbance?**

Type of Well Pad: MULTIPLE WELL **Multiple Well Pad Name:** NEVER BETTER 14 FED COM **Number:** 722H, 723H

Well Class: HORIZONTAL **Number of Legs:** 1

Well Work Type: Drill

Well Type: OIL WELL

Describe Well Type:

Well sub-Type: INFILL

Describe sub-type:

Distance to town: **Distance to nearest well:** 15 FT **Distance to lease line:** 100 FT

Reservoir well spacing assigned acres Measurement: 1280 Acres

Well plat: S_Never_Better_14_Fed_Com_C102_723H_R1_20240507071854.pdf

Well work start Date: 01/25/2025 **Duration:** 25 DAYS

Section 3 - Well Location Table

Survey Type: RECTANGULAR

Describe Survey Type:

Datum: NAD83 **Vertical Datum:** NAVD88

Survey number: **Reference Datum:** KELLY BUSHING

Wellbore	NS-Foot	NS Indicator	EW-Foot	EW Indicator	Twsp	Range	Section	Aliquot/Lot/Tract	Latitude	Longitude	County	State	Meridian	Lease Type	Lease Number	Elevation	MD	TVD	Will this well produce from this
SHL Leg #1	549	FNL	1167	FWL	22S	32E	14	Tract D	32.397522	-103.650228	LEA	NEW MEXICO	NEW MEXICO	F	NMNM 85937	3753			Y
KOP Leg #1	50	FNL	1980	FWL	22S	32E	14	Tract C	32.398908	-103.647595	LEA	NEW MEXICO	NEW MEXICO	F	NMNM 85937	-8040	11876	11793	Y
PPP Leg #1-1	100	FNL	1980	FWL	22S	32E	14	Tract C	32.398771	-103.647595	LEA	NEW MEXICO	NEW MEXICO	F	NMNM 85937	-8252	12096	12005	Y

Operator Name: EOG RESOURCES INCORPORATED

Well Name: NEVER BETTER 14 FED COM **Well Number:** 723H

Wellbore	NS-Foot	NS Indicator	EW-Foot	EW Indicator	Twsp	Range	Section	Aliquot/Lot/Tract	Latitude	Longitude	County	State	Meridian	Lease Type	Lease Number	Elevation	MD	TVD	Will this well produce from this
PPP Leg #1-2	2640	FSL	1980	FWL	22S	32E	14	Tract K	32.391777	-103.647594	LEA	NEW MEXICO	NEW MEXICO	F	NMNM 77058	-8517	14743	12270	Y
EXIT Leg #1	100	FSL	1980	FWL	22S	32E	23	Tract N	32.370274	-103.647587	LEA	NEW MEXICO	NEW MEXICO	F	NMNM 81633	-8517	22566	12270	Y
BHL Leg #1	100	FSL	1980	FWL	22S	32E	23	Tract N	32.370274	-103.647587	LEA	NEW MEXICO	NEW MEXICO	F	NMNM 81633	-8517	22566	12270	Y

DISTRICT I
1625 N. French Dr., Hobbs, NM 88240
Phone: (575) 393-6161 Fax: (575) 393-0720
DISTRICT II
811 S. First St., Artesia, NM 88210
Phone: (575) 748-1283 Fax: (575) 748-9720
DISTRICT III
1000 Rio Brazos Rd., Aztec, NM 87410
Phone: (505) 334-6178 Fax: (505) 334-6170
DISTRICT IV
1220 S. St. Francis Dr., Santa Fe, NM 87505
Phone: (505) 476-3460 Fax: (505) 476-3462

State of New Mexico
Energy, Minerals & Natural Resources Department
OIL CONSERVATION DIVISION
1220 South St. Francis Dr.
Santa Fe, New Mexico 87505

Form C-102
Revised August 1, 2011
Submit one copy to appropriate District Office
☐ AMENDED REPORT

WELL LOCATION AND ACREAGE DEDICATION PLAT

API Number	Pool Code	Pool Name
30-025-	98166	WC-025 G-09 S233216K; UPR WOLFCAMP

Property Code	Property Name	Well Number
	NEVER BETTER 14 FED COM	723H

OGRID No.	Operator Name	Elevation
7377	EOG RESOURCES, INC.	3753'

Surface Location

UL or lot no.	Section	Township	Range	Lot Idn	Feet from the	North/South line	Feet from the	East/West line	County
D	14	22 S	32 E		549	NORTH	1167	WEST	LEA

Bottom Hole Location If Different From Surface

UL or lot no.	Section	Township	Range	Lot Idn	Feet from the	North/South line	Feet from the	East/West line	County
N	23	22 S	32 E		100	SOUTH	1980	WEST	LEA

Dedicated Acres	Joint or Infill	Consolidated Code	Order No.
1280			PENDING COM AGREEMENT

No allowable will be assigned to this completion until all interests have been consolidated or a non-standard unit has been approved by the division.

SURFACE LOCATION
NEW MEXICO EAST
NAD 1983
X=752175' Y=509023'
LAT=N32.397522°
LONG=W103.650228°
NAD 1927
X=710993' Y=508963'
LAT=N32.397399°
LONG=W103.649742°
549' FNL 1167' FWL

KOP LOCATION
NEW MEXICO EAST
NAD 1983
X=752985' Y=509533'
LAT=N32.398908°
LONG=W103.647595°
NAD 1927
X=711802' Y=509472'
LAT=N32.398785°
LONG=W103.647108°
50' FNL 1980' FWL

FIRST TAKE POINT
NEW MEXICO EAST
NAD 1983
X=752985' Y=509483'
LAT=N32.398771°
LONG=W103.647595°
NAD 1927
X=711803' Y=509422'
LAT=N32.398648°
LONG=W103.647108°
100' FNL 1980' FWL

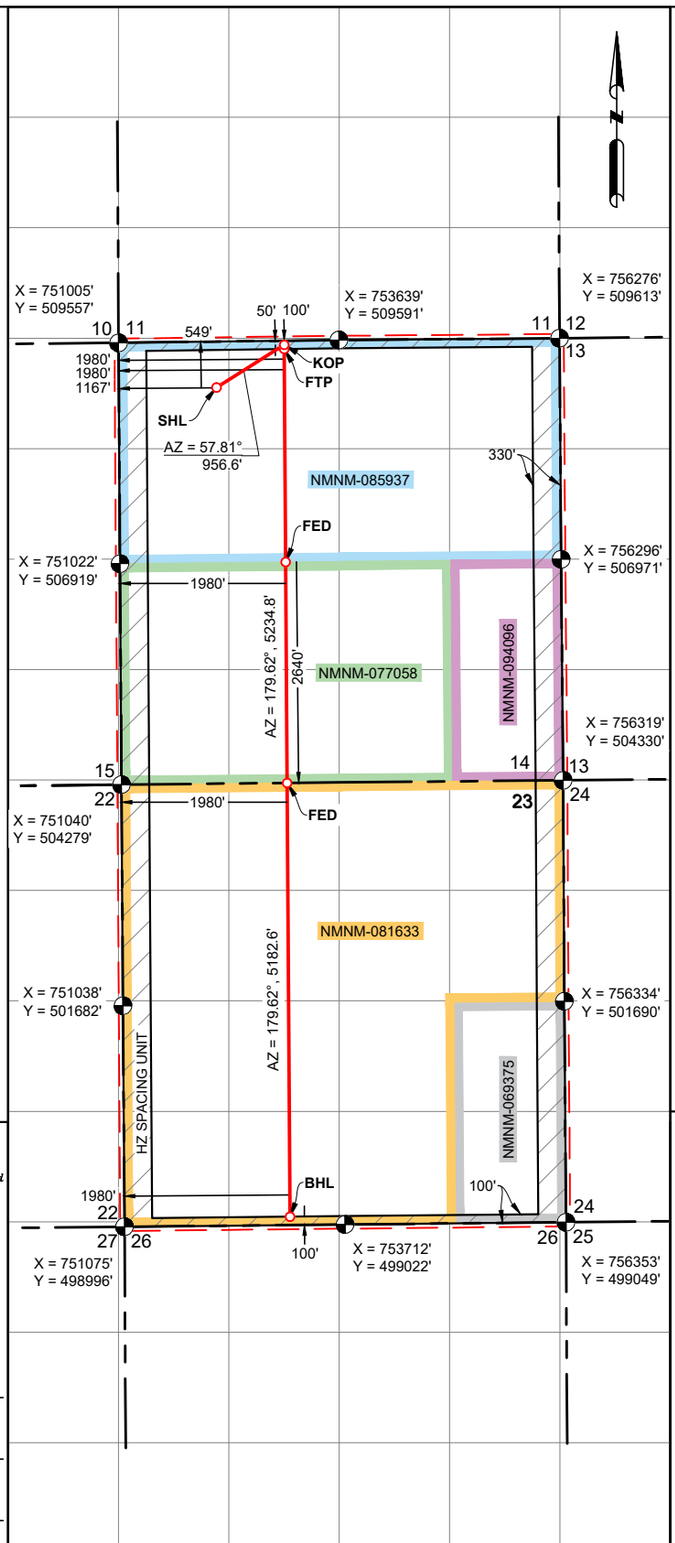

FED PERF. POINT
NEW MEXICO EAST
NAD 1983
X=753002' Y=506938'
LAT=N32.391777°
LONG=W103.647594°
NAD 1927
X=711819' Y=506878'
LAT=N32.391654°
LONG=W103.647107°
2640' FSL 1980' FWL

FED PERF. POINT
NEW MEXICO EAST
NAD 1983
X=753019' Y=504298'
LAT=N32.384520°
LONG=W103.647592°
NAD 1927
X=711837' Y=504238'
LAT=N32.384397°
LONG=W103.647106°
0' FSL 1980' FWL

LOWER MOST PERF./ BOTTOM HOLE LOCATION
NEW MEXICO EAST
NAD 1983
X=753054' Y=499116'
LAT=N32.370274°
LONG=W103.647587°
NAD 1927
X=711871' Y=499055'
LAT=N32.370151°
LONG=W103.647101°
100' FSL 1980' FWL

OPERATOR CERTIFICATION

I hereby certify that the information contained herein is true and complete to the best of my knowledge and belief, and that this organization either owns a working interest or unleased mineral interest in the land including the proposed bottom hole location or has a right to drill this well at this location pursuant to a contract with an owner of such a mineral or working interest, or to voluntary pooling agreement or a compulsory pooling order heretofore entered by the division.

Shea Bailey 5/6/24
Signature Date

Shea Bailey
Print Name

sbailey1@eogresources.com
E-mail Address

SURVEYORS CERTIFICATION

I hereby certify that the well location shown on this plat was plotted from field notes of actual surveys made by me or under my supervision, and that the same is true and correct to the best of my belief.

JANUARY 4, 2024
Date of Survey
Signature and Seal of Professional Surveyor:

17 APRIL 2024
TIM C. PAPPAS
NEW MEXICO
21209
REGISTERED PROFESSIONAL SURVEYOR

Job No.: EOG_B230106 TIM C. PAPPAS, N.M.P.L.S. Certificate Number 21209

\\agafs\projects\EOG_B230106\PRODUCTS\02_Package\C102_WLEPad_A\0_Never_Better_14_Fed_Com_C102_WLE_723H_R1.dwg KSHARMENTO 4/16/2024 6:38 PM

AFMSS
U.S. Department of the Interior
BUREAU OF LAND MANAGEMENT

Drilling Plan Data Report
09/09/2026

APD ID: 10400098402
Submission Date: 05/08/2024

Operator Name: EOG RESOURCES INCORPORATED

Well Name: NEVER BETTER 14 FED COM
Well Number: 723H

Well Type: OIL WELL
Well Work Type: Drill

Highlighted data reflects the most recent changes

Show Final Text

Section 1 - Geologic Formations

Formation ID	Formation Name	Elevation	True Vertical	Measured Depth	Lithologies	Mineral Resources	Producing Formatio
15156163	PERMIAN	3753	0	0	ALLUVIUM	NONE	N
15156164	RUSTLER	2777	976	976	ANHYDRITE	NONE	N
15156165	TOP SALT	2465	1288	1288	SALT	NONE	N
15156166	BASE OF SALT	-790	4543	4543	SALT	NONE	N
15156167	LAMAR	-1102	4855	4855	LIMESTONE	NONE	N
15156169	BELL CANYON	-1153	4906	4906	SANDSTONE	NATURAL GAS, OIL	N
15156170	CHERRY CANYON	-2037	5790	5790	SANDSTONE	NATURAL GAS, OIL	N
15156171	BRUSHY CANYON	-3238	6991	6991	SANDSTONE	NATURAL GAS, OIL	N
15156172	BONE SPRING LIME	-5011	8764	8764	LIMESTONE	NATURAL GAS, OIL	N
15156174	BONE SPRING 1ST	-6170	9923	9923	SANDSTONE	NATURAL GAS, OIL	Y
15156175	BONE SPRING 2ND	-6700	10453	10453	SANDSTONE	NATURAL GAS, OIL	Y
15156177	BONE SPRING 3RD	-7920	11673	11673	SANDSTONE	NATURAL GAS, OIL	Y
15156179	WOLFCAMP	-8266	12019	12019	SANDSTONE	NATURAL GAS, OIL	Y

Section 2 - Blowout Prevention

Operator Name: EOG RESOURCES INCORPORATED

Well Name: NEVER BETTER 14 FED COM **Well Number:** 723H

Pressure Rating (PSI): 10M **Rating Depth:** 12270

Equipment: The minimum blowout preventer equipment (BOPE) shown in Exhibit #1 will consist of a single ram, mud cross and double ram-type (10,000 psi WP) preventer and an annular preventer (5,000 psi WP). Both units will be hydraulically operated and the ram-type will be equipped with blind rams on bottom and drill pipe rams on top. EOG will utilize wing unions on BOPE connections that can be isolated from wellbore pressure through means of a choke. All wing unions will be rated to a pressure that meets or exceeds the pressure rating of the BOPE system. A multi-bowl wellhead system will be utilized. After running the 9-5/8 surface casing, a 9-5/8 BOP/BOPE system with a minimum working pressure of 10,000 psi will be installed on the wellhead system and will be pressure tested to 250 psi low followed by a 10,000 psi pressure test. This pressure test will be repeated at least every 30 days, as per Onshore Order No. 2. The minimum working pressure of the BOP and related BOPE required for drilling below the surface casing shoe shall be 10,000 psi. The multi-bowl wellhead will be installed by vendors representative(s). A copy of the installation instructions for the Cactus Multi-Bowl WH system has been sent to the NM BLM office in Carlsbad, NM. The wellhead will be installed by a third party welder while being monitored by WH vendors representative. All BOP equipment will be tested utilizing a conventional test plug. Not a cup or Jpacker type. EOG Resources reserves the option to conduct BOPE testing during wait on cement periods provided a test plug is utilized. A solid steel body pack-off will be utilized after running and cementing the intermediate casing. After installation the pack-off and lower flange will be pressure tested to 5000 psi. Casing strings will be tested as per Onshore Order No. 2 to at least 0.22 psi/ft or 1,500 psi, whichever is greater.

Requesting Variance? YES

Variance request: NOT ALL VARIANCES FIT IN THIS SPACE, SEE VARIANCE REQUEST ATTACHMENT: Variance is requested to waive the centralizer requirements for the 7-5/8" casing in the 8-3/4" hole size. An expansion additive will be utilized, in the cement slurry, for the entire length of the 8-3/4 hole interval to maximize cement bond and zonal isolation. Variance is also requested to waive any centralizer requirements for the 5-1/2" casing in the 6-3/4" hole size. An expansion additive will be utilized, in the cement slurry, for the entire length of the 6-3/4" hole interval to maximize cement bond and zonal isolation. Variance is also requested to waive the annular clearance requirements for the 5-1/2" casing by 7-5/8" casing annulus to the proposed top of cement. EOG requests permission to allow deviation from the 0.422'' annulus clearance requirement from Onshore Order #2 under the following conditions: - Annular clearance to meet or exceed 0.422'' between intermediate casing ID and production casing coupling only on the first 500' overlap between both casing strings. - Annular clearance less than 0.422'' is acceptable for the production open hole section. EOG requests variance from minimum standards to pump a two stage cement job on the 7-5/8" intermediate casing string with the first stage being pumped conventionally with the calculated top of cement at the Brushy Canyon (7,619') and the second stage performed as a 1000 sack bradenhead squeeze with planned cement from the Brushy Canyon to surface. If necessary, a top out consisting of 270 sacks of Class C cement + 3% Salt + 1% PreMag-M + 6% Bentonite Gel (2.30 yld, 12.91 ppg) will be executed as a contingency. Top will be verified by Echo-meter. Variance is requested to use a co-flex line between the BOP and choke manifold (instead of using a 4" OD steel line). Variance is requested to use a 5,000 psi annular BOP with the 10,000 psi BOP stack. Variance is requested to waive the centralizer requirements for the 8-3/4" casing in the 9-7/8" hole size. An expansion additive will be utilized, in the cement slurry, for the entire length of the 9-7/8" hole interval to maximize cement bond and zonal isolation. Variance is also requested to waive any centralizer requirements for the 6" casing in the 7-7/8" hole size. An expansion additive will be utilized, in the cement slurry, for the entire length of the 7-7/8" hole interval to maximize cement bond and zonal isolation. Variance is also requested to waive the annular clearance requirements for the 6" casing by 8-3/4" casing annulus to the proposed top of cement. EOG requests permission to allow deviation from the 0.422'' annulus clearance requirement from Onshore Order #2 under the following conditions: - Annular clearance to meet or exceed 0.422'' between intermediate casing ID and production casing coupling only on the first 500' overlap between both casing strings. - Annular clearance l

Testing Procedure: EOG Resources Inc. (EOG) respectfully requests a variance from the minimum standards for well control equipment testing of Onshore Order No. 2 (item III.A.2.a.i) to allow a testing schedule of the blow out preventer (BOP) and blow out prevention equipment (BOPE) along with Batch Drilling & Offline cement operations to include the following: Full BOPE test at first installation on the pad. Full BOPE test every 20 days per Onshore Order No. 2. Function test BOP elements per Onshore Order No. 2. Break testing BOP and BOPE coupled with batch drilling operations and option to offline cement and/or remediate (if needed) any surface or intermediate sections, according to attached offline cementing support documentation. After the well section is secured, the BOP will be disconnected from the wellhead and walked with the rig to another well on the pad. TA cap will also be installed per Wellhead vendor procedure and pressure inside the casing will be monitored via the valve on the TA cap as per standard batch drilling ops.

Operator Name: EOG RESOURCES INCORPORATED

Well Name: NEVER BETTER 14 FED COM **Well Number:** 723H

See attached "EOG BLM Variance 3a -Offline Cement Intermediate Operational Procedure" Pipe rams and blind rams will be operationally checked on each trip out of the hole. These checks will be noted on the daily tour sheets. A hydraulically operated choke will be installed prior to drilling out of the intermediate casing shoe. EOG will include the Echo-meter verified fluid top and the volume of displacement fluid above the cement slurry in the annulus in all post-drill sundries on wells utilizing this cement program. EOG will report to the BLM the volume of fluid (limited to 5 bbls) used to flush intermediate casing valves following backside cementing procedures.

Choke Diagram Attachment:

10M_Choke_Manifold_20230317082136.pdf

Gates_Co_Flex_Hose_Test_Chart_and_Certifications_20250219095359.pdf

BOP Diagram Attachment:

Blanket_Casing_Design___Never_Better_14_Fed_Com_4.4.2024_20240506084604.pdf

Wellhead_9.675x7.625x5.500in_csg_20230317082158.pdf

EOG_BLM_10M_Annular_Variance___9.625_in_20230317082158.pdf

EOG_BLM_Variance_3a___Offline_Cement_Intermediate_Operational_Procedure_20230317082158.pdf

Wellhead_3_string_10.750x8.750x6.000_Cactus_SDT_3141_1_20230317082158.pdf

VARIANCE_WOLFCAMP_DOCUMENT_20230511080619.pdf

Never_Better_14_Fed_Com_723H_Variances_20240507072253.pdf

Section 3 - Casing

Casing ID	String Type	Hole Size	Csg Size	Condition	Standard	Tapered String	Top Set MD	Bottom Set MD	Top Set TVD	Bottom Set TVD	Top Set MSL	Bottom Set MSL	Calculated casing length MD	Grade	Weight	Joint Type	Collapse SF	Burst SF	Joint SF Type	Joint SF	Body SF Type	Body SF
1	SURFACE	12.25	9.625	NEW	API	N	0	1100	0	1100	3753	2653	1100	J-55	36	LT&C	1.125	1.25	BUOY	1.6	BUOY	1.6
2	PRODUCTION	6.75	5.5	NEW	API	N	0	10685	0	10600	3583	-6847	10685	P-110	20	OTHER - DWC/C IS MS	1.125	1.25	BUOY	1.6	BUOY	1.6
3	PRODUCTION	6.75	5.5	NEW	API	N	10685	11185	10600	11100	-6837	-7347	500	P-110	20	OTHER - Vam Sprint SF	1.125	1.25	BUOY	1.6	BUOY	1.6
4	INTERMEDIATE	8.75	7.875	NEW	API	N	0	11185	0	11098	3583	-7345	11185	HCP-110	29.7	OTHER - FXL	1.125	1.25	BUOY	1.6	BUOY	1.6
5	PRODUCTION	6.75	5.5	NEW	API	N	11185	22566	11100	12270	-7337	-8517	11381	P-110	20	OTHER - DWC/C IS MS	1.125	1.25	BUOY	1.6	BUOY	1.6

Casing Attachments

Operator Name: EOG RESOURCES INCORPORATED

Well Name: NEVER BETTER 14 FED COM **Well Number:** 723H

Casing Attachments

Casing ID: 1 **String** SURFACE

Inspection Document:

Spec Document:

Tapered String Spec:

Casing Design Assumptions and Worksheet(s):

Never_Better_14_Fed_Com_723H_Permit_Info__Dual__20240507072436.pdf

Casing ID: 2 **String** PRODUCTION

Inspection Document:

Spec Document:

Tapered String Spec:

Casing Design Assumptions and Worksheet(s):

Casing ID: 3 **String** INTERMEDIATE

Inspection Document:

Spec Document:

Tapered String Spec:

Casing Design Assumptions and Worksheet(s):

7.625in_29.700lbf__HCP110_FXL_20240507072421.pdf

Operator Name: EOG RESOURCES INCORPORATED

Well Name: NEVER BETTER 14 FED COM **Well Number:** 723H

Casing Attachments

Casing ID: 4 **String** PRODUCTION

Inspection Document:

Spec Document:

Tapered String Spec:

Casing Design Assumptions and Worksheet(s):

6.000in_24.50ppf_P110EC_VAM_SPRINT_SF_20240507072458.pdf

Casing ID: 5 **String** PRODUCTION

Inspection Document:

Spec Document:

Tapered String Spec:

Casing Design Assumptions and Worksheet(s):

5.500in_20.00lbf_P110_EC_DWC_C_IS_MS_20240507072349.pdf

Section 4 - Cement

String Type	Lead/Tail	Stage Tool Depth	Top MD	Bottom MD	Quantity(sx)	Yield	Density	Cu Ft	Excess%	Cement type	Additives
INTERMEDIATE	Lead		6790	0	510	1.11	14.2	566.1	25	Class C	1st Stage (Tail): Class C + 0.6% Halad-9 + 0.45% HR-601 + 3% Microbond (TOC @ 6790')
INTERMEDIATE	Tail		0	11098	1160	1.5	14.8	1740	25	Class C	2nd Stage (Bradenhead squeeze): Class C + 3% Salt + 1% PreMag-M + 6% Bentonite Gel (TOC @ surface)

Operator Name: EOG RESOURCES INCORPORATED

Well Name: NEVER BETTER 14 FED COM **Well Number:** 723H

String Type	Lead/Tail	Stage Tool Depth	Top MD	Bottom MD	Quantity(sx)	Yield	Density	Cu Ft	Excess%	Cement type	Additives
SURFACE	Lead		0	900	310	1.73	13.5	536.3	25	Class C	Lead: Class C + 4.0% Bentonite Gel + 0.5% CaCl2 + 0.25 lb/sk Cello- Flake (TOC @ Surface)
SURFACE	Tail		900	1100	80	1.34	14.8	107.2	25	Class C	Tail: Class C + 0.6% FL-62 + 0.25 lb/sk Cello-Flake + 0.2% Sodium Metasilicate (TOC @ 900')
PRODUCTION	Lead		10598	22566	1525	1.31	14.2	1991.2	25	CLASS H	Lead: Class H + 0.4% Halad-344 + 0.35% HR-601 + 3% Microbond (TOC @ 10598')

Additional Cementing Information:

Section 5 - Circulating Medium

Mud System Type: Closed

Will an air or gas system be Used? NO

Description of the equipment for the circulating system in accordance with 43 CFR 3172:

Diagram of the equipment for the circulating system in accordance with 43 CFR 3172:

Describe what will be on location to control well or mitigate other conditions: (A) A kelly cock will be kept in the drill string at all times. (B) A full opening drill pipe-stabbing valve (inside BOP) with proper drill pipe connections will be on the rig floor at all times. (C) H2S monitoring and detection equipment will be utilized from surface casing point to TD.

Describe the mud monitoring system utilized: The highest mud weight needed to balance formation is expected to be 11.5 ppg. In order to maintain hole stability, mud weights up to 14.0 ppg may be utilized. An electronic pit volume totalizer (PVT) will be utilized on the circulating system, to monitor pit volume, flow rate, pump pressure and stroke rate. Sufficient mud materials to maintain mud properties and meet minimum lost circulation and weight increase requirements will be kept at the wellsite at all times.

Circulating Medium Table

Operator Name: EOG RESOURCES INCORPORATED

Well Name: NEVER BETTER 14 FED COM **Well Number:** 723H

Top Depth	Bottom Depth	Mud Type	Min Weight (lbs/gal)	Max Weight (lbs/gal)	Density (lbs/cu ft)	Gel Strength (lbs/100 sqft)	PH	Viscosity (CP)	Salinity (ppm)	Filtration (cc)	Additional Characteristics
0	1100	WATER-BASED MUD	8.6	8.8							
1100	11098	SALT SATURATED	10	10.2							
11098	11876	OIL-BASED MUD	8.7	9.4							
11876	12270	OIL-BASED MUD	10	14							

Section 6 - Test, Logging, Coring

List of production tests including testing procedures, equipment and safety measures:

Open-hole logs are not planned for this well.
GRCCL will be run in cased hole during completions phase of operations.

List of open and cased hole logs run in the well:

DIRECTIONAL SURVEY,

Coring operation description for the well:

None

Section 7 - Pressure

Anticipated Bottom Hole Pressure: 8933 **Anticipated Surface Pressure:** 6233

Anticipated Bottom Hole Temperature(F): 193

Anticipated abnormal pressures, temperatures, or potential geologic hazards? NO

Describe:

Contingency Plans geoharzards description:

Contingency Plans geohazards

Hydrogen Sulfide drilling operations plan required? YES

Hydrogen sulfide drilling operations

Never_Better_14_Fed_Com_723H_H2S_Plan_Summary_20240507072613.pdf

Operator Name: EOG RESOURCES INCORPORATED

Well Name: NEVER BETTER 14 FED COM **Well Number:** 723H

Section 8 - Other Information

Proposed horizontal/directional/multi-lateral plan submission:

Never_Better_14_Fed_Com_723H_Planning_Report_20240507072641.pdf

Never_Better_14_Fed_Com_723H_Wall_Plot_20240507072641.pdf

Other proposed operations facets description:

The drilling operation should be finished in approximately one month. If the well is productive, an additional 60-90 days will be required for completion and testing before a decision is made to install permanent facilities.

EOG Resources requests the option to contract a Surface Rig to drill, set surface casing, and Cement on the subject well. After WOC 8 hours or 500 psi compressive strength (whichever is greater), the Surface Rig will move off so the wellhead can be installed. A welder will cut the casing to the proper height and weld on the wellhead (both A and B sections). The weld will be tested to 1,000 psi. All valves will be closed and a wellhead cap will be installed (diagram attached). If the timing between rigs is such that EOG Resources would not be able to preset the surface, the Primary Rig will MIRU and drill the well in its entirety per the APD.

Other proposed operations facets attachment:

10.750in_40.5ppf_J55_STC_20230317084233.pdf

10M_BOP_Diagram_11.000in_20230317084234.pdf

10M_Choke_Manifold_20230317084235.pdf

5.500in_20.00lbf_P110_EC_DWC_C_IS_MS_20230317084223.pdf

5.500in_20.00lbf_P110_EC_VAM_SPRINT_SF_20230317084223.pdf

6.000in_22.30ppf_VST_P110EC_DWC_20230317084223.pdf

7.625in_29.700lbf__HCP110_FXL_20230317084223.pdf

8.750in_38.5ppf_P110EC_SPRINT_SF_20230317084223.pdf

9.625in_36lbf_J_55_LTC_20230317084223.pdf

Wellhead_3_string_10.750x8.750x6.000_Cactus_SDT_3141_1_20230317084235.pdf

Wellhead_9.675x7.625x5.500in_csg_20230317084236.pdf

Blanket_Casing_Design___Never_Better_14_Fed_Com_4.4.2024_20240506084524.pdf

Never_Better_14_Fed_Com_723H_Permit_Info__Dual__20240507072659.pdf

Never_Better_14_Fed_Com_723H_Rig_Layout_20240507072659.pdf

Never_Better_14_Fed_Com_723H_Variances_20240507072659.pdf

Other Variance request(s)?: Y

Other Variance attachment:

EOG_BLM_10M_Annular_Variance___9.625_in_20230317084842.pdf

EOG_BLM_Variance_3a___Offline_Cement_Intermediate_Operational_Procedure_20230317084842.pdf

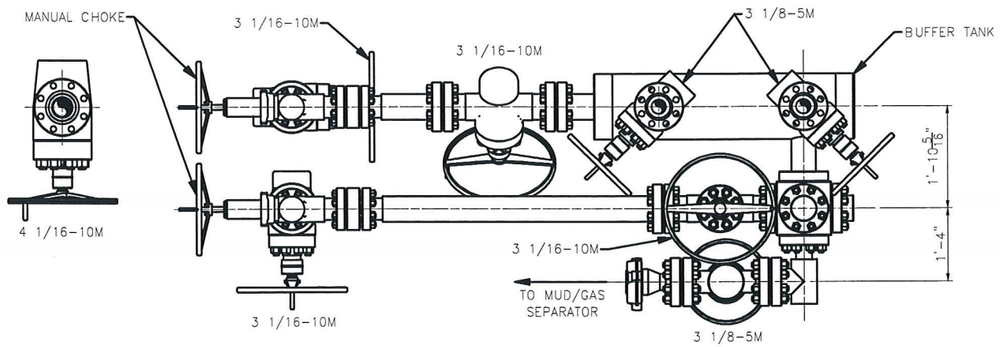

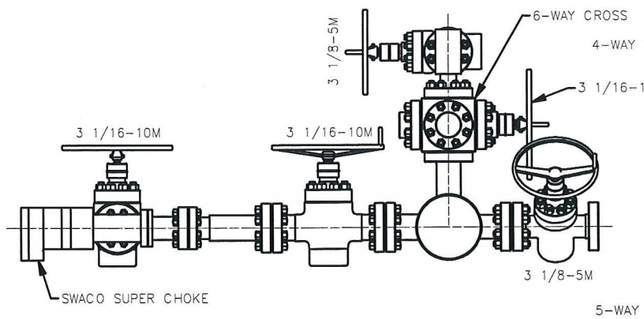

VIEW A-A

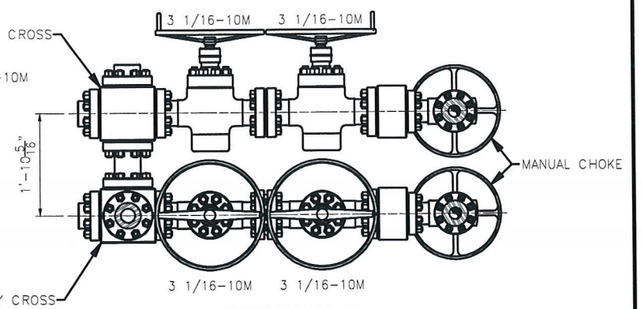

SECTION B-B

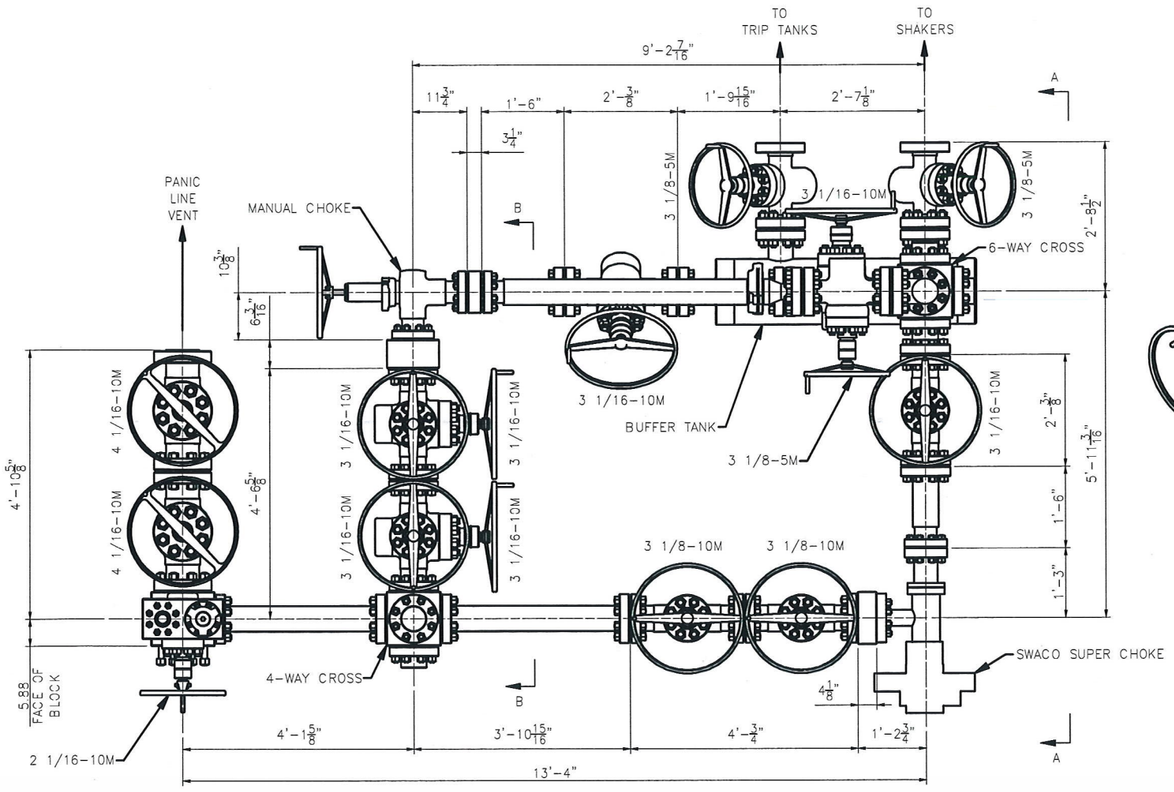

PLAN VIEW

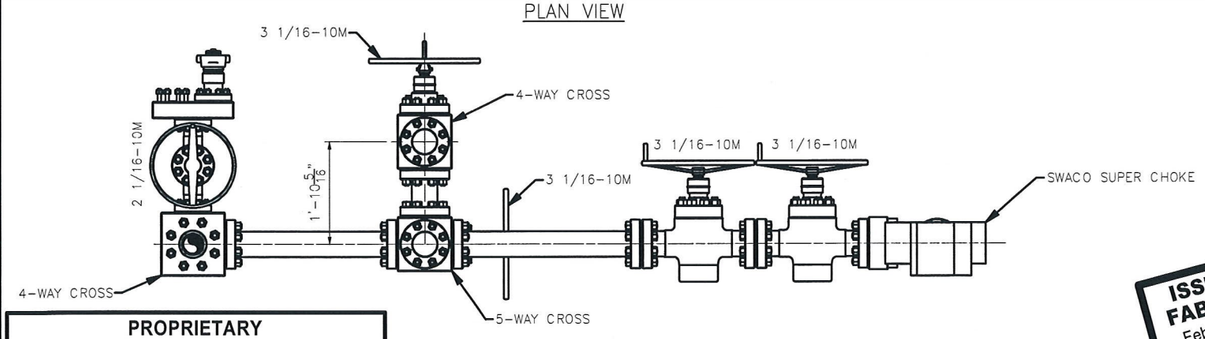

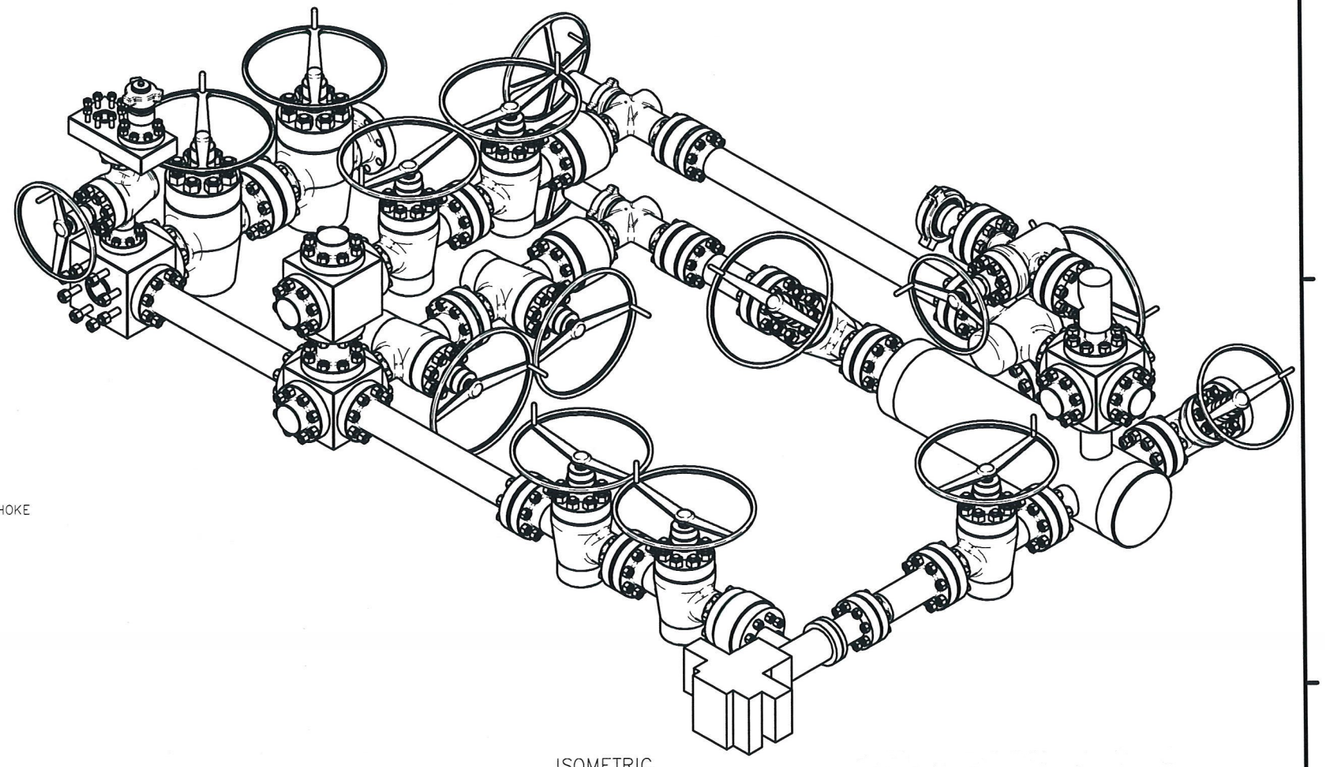

ISOMETRIC

PROPRIETARY

THIS DRAWING AND THE IDEAS AND INFORMATION INCLUDED IN THIS DRAWING ARE PROPRIETARY AND ARE NOT TO BE REPRODUCED, DISTRIBUTED OR DISCLOSED IN ANY MANNER,WITHOUT THE PRIOR, WRITTEN CONSENT OF A DULY AUTHORIZED OFFICER OF HELMERICH & PAYNE INT'L DRILLING CO.

ISSUED FOR FABRICATION
February-10-2014
DRAFTSMAN MWL
ENGINEER

STANDARD TOLERANCES
(UNLESS NOTED)

1. FABRICATION DIMENSIONS:	A-0° TO 24"	±1/16"
	B-24° TO 120°	±1/8"
	C-OVER 120°	±1/4"
2. MACHINED DIMENSIONS:	A-ANGULAR	±.30'
	B-LINEAR (EXPRESSED AS FRACTION)	±.015
	LINEAR (EXPRESSED TO ONE DECIMAL)	±.1
	LINEAR (EXPRESSED TO TWO DECIMALS)	±.015
	LINEAR (EXPRESSED TO THREE DECIMALS)	±.005

REV	DATE	DESCRIPTION	BY
—			

HELMERICH & PAYNE INTERNATIONAL DRILLING CO.

TITLE: 3 CHOKE, 3 LEVEL, 10M CHOKE MANIFOLD G.A.

CUSTOMER: H&P

PROJECT:

DRAWN: MWL | DATE: 2/10/2014 | DWG. NO.: HP-D1254 | REV: —

SCALE: 3/4"=1'-0" | SHEET: 1 OF 1

Page 61 of 203

Certificate of Authority to use the Official API Monogram

License Number: 7K-0519

ORIGINAL

The American Petroleum Institute hereby grants to

GATES ENGINEERING AND SERVICES
7603 Prairie Oak Drive, Suite 190
Houston, TX
United States

the right to use the Official API Monogram® on manufactured products under the conditions in the official publications of the American Petroleum Institute entitled API Spec Q1® and **API-7K** and in accordance with the provisions of the License Agreement.

In all cases where the Official API Monogram is applied, the API Monogram shall be used in conjunction with this certificate number: **7K-0519**

The American Petroleum Institute reserves the right to revoke this authorization to use the Official API Monogram for any reason satisfactory to the Board of Directors of the American Petroleum Institute.

The scope of this license includes the following: High Pressure Mud and Cement Hoses at FSL 0, at FSL 1, at FSL 2

American Petroleum Institute

2018-151

QMS Exclusions: No Exclusions Identified as Applicable

Effective Date: OCTOBER 24, 2024
Expiration Date: DECEMBER 18, 2027

Senior Vice President of Global Industry Services

To verify the authenticity of this license, go to www.api.org/compositelist.

Received by OCD: 10/28/2026 2:09:08 PM

Released to Imaging: 11/13/2026 9:51:12 AM

Page 62 of 203

Certificate of Authority to use the Official API Monogram

License Number: 16C-0485

ORIGINAL

The American Petroleum Institute hereby grants to

GATES ENGINEERING AND SERVICES
7603 Prairie Oak Drive, Suite 190
Houston, TX
United States

the right to use the Official API Monogram® on manufactured products under the conditions in the official publications of the American Petroleum Institute entitled API Spec Q1® and **API-16C** and in accordance with the provisions of the License Agreement.

In all cases where the Official API Monogram is applied, the API Monogram shall be used in conjunction with this certificate number: **16C-0485**

The American Petroleum Institute reserves the right to revoke this authorization to use the Official API Monogram for any reason satisfactory to the Board of Directors of the American Petroleum Institute.

The scope of this license includes the following: Flexible Choke and Kill Lines atFSL 0, FSL 1, FSL 2, FSL 3

American Petroleum Institute

AMERICAN PETROLEUM INSTITUTE CORPORATE SEAL INCORPORATED 1919

2018-151

QMS Exclusions: No Exclusions Identified as Applicable

Effective Date: OCTOBER 24, 2024
Expiration Date: DECEMBER 18, 2027

To verify the authenticity of this license, go to www.api.org/compositelist.

Senior Vice President of Global Industry Services

Received by OCD: 10/28/2026 2:09:08 PM

Released to Imaging: 11/13/2026 9:51:12 AM

American Petroleum Institute

REGISTRATION NO. Q1-3650

Certificate of Registration

The American Petroleum Institute certifies that the quality management system of

GATES ENGINEERING AND SERVICES
7603 Prairie Oak Drive, Suite 190
Houston, TX
United States

has been assessed by the American Petroleum Institute and found to be in conformance with the following:

API Spec Q1, 9th Edition

The scope of this registration and the approved quality management system applies to the

Assembly and Pressure Test of High Pressure Mud and Cement Hoses, Flexible Choke and Kill Lines and General Rubber Hydraulic Hose Assemblies

API approves the organization's justification for excluding

No Exclusions Identified as Applicable

API Spec Q1 Registered ®

Effective Date:	**OCTOBER 24, 2024**
Expiration Date:	**DECEMBER 18, 2027**
Registered Since:	**DECEMBER 18, 2018**

Anchal Liddar

Senior Vice President of Global Industry Services

This certificate is valid for the period specified herein. The registered organization must continually meet all requirements of API Spec Q1, *Specification for Quality Management System Requirements for Manufacturing Organizations for the Petroleum and Natural Gas Industry,* and the requirements of the Registration Agreement. Registration is maintained and regularly monitored through annual full system audits. This certificate has been issued from API offices located at 200 Massachusetts Avenue, NW Suite 1100, Washington, DC 20001-5571, U.S.A. It is the property of API and must be returned upon request.
To verify the authenticity of this certificate, go to www.api.org/compositelist.

2023-120 | 06.23 | 4M | Printed in the USA |

BLACK GOLD®

GATES ENGINEERING & SERVICES NORTH AMERICA
7603 Prairie Oak Dr. Suite 190
Houston, TX. 77086

PHONE: +1 (281) 602-4100
FAX: +1 (281) 602-4147
EMAIL: gesna.quality@gates.com
WEB: gates.com/oilandgas

CERTIFICATE OF CONFORMANCE

This is to verify that all Parts and/or Materials included in this shipment have been manufactured and/or processed in Conformance with applicable drawings and specifications, and that Records of Required Tests are on file and subject to examination. The following items were purchased via **Gates Engineering & Services North America** facilities in Houston, TX, USA. This hose assembly was designed and manufactured to meet requirements of API Spec 16C, 3rd Edition.

CUSTOMER:	HELMERICH & PAYNE INTERNATIONAL DRILLING CO.
CUSTOMER P.O.#:	740399823 (TAG WITH H&P I.D # 88076545 &H&P P.O. # 740399823 (UK S/O 34557))
CUSTOMER P/N:	3.035.016C4116FX-FLTSSA
PART DESCRIPTION:	3" X 35 FT GATES API 16C CHOKE & KILL FSL 3 TEMP B HOSE ASSEMBLY WITH STAINLESS STEEL ARMOR C/W 4 1/16" 10K H2S SUITED FLOAT X FLOAT FLANGES WITH BX 155 RING GROOVE SUPPLIED WITH SAFETY CLAMPS/LIFT EYE CLAMPS
SALES ORDER #:	525112
QUANTITY:	1
SERIAL #:	SN 139321 HOSE BATCH 139244

SIGNATURE: _____

TITLE: QUALITY ASSURANCE

DATE: 2/10/2023

Gates Engineering & Services UK Ltd		CERTIFICATE OF CONFORMITY	
Doc. Ref.	Form-056		
Revision	4		

Gates SO No. 34557	**Customer Name & Address:** Gates Engineering & Services NA Inc Accounts payable 7N GESNA 1144 Fifteenth Street, Suite 1400 Denver, CO 80202 USA
Customer PO No: 1803964/ 1	
Description: 3" 10K API 16C CHOKE & KILL HOSE ASSEMBLY X 35FT OAL (QTY 5)	

This is to certify that the components listed below have been supplied in accordance with API 16C & the above referenced order number. The assemblies listed below have been manufactured and tested in the UK.

SPECIFICATION

ITEM	DESCRIPTION	BATCH NUMBER	QTY
1	3" 10K API 16C CHOKE & KILL HOSE ASSEMBLY X 35FT OAL PART NO: HA34539-001 END A: 4.1/16" 10K API SPEC 6A TYPE FLANGE WITH BX155 RING GROOVE END B: 4.1/16" 10K API SPEC 17D SV SWIVEL FLANGE WITH BX155 RING GROOVE EACH END HAS AN INCONEL 625 INLAID RING GROOVE HOSE METALLIC PARTS MEET NACE-MR-0175 LATEST EDITION REQUIREMENTS WORKING PRESSURE: 10,000 PSI TEST PRESSURE: 15,000 PSI STANDARD: API 16C FSL3 MONOGRAMMED, 3RD EDITION EXTERNAL PROTECTION: STAINLESS STEEL ARMOUR INCLUDED FIRE RATED: API 16C STANDARD SECTION B.12.4 (704° FOR 30 MINS) H2S SERVICE SUITABLE TEMPERATURE CLASS B(-25 TO 100°C) HIGH TEMPERATURE EXPOSURE / SURVIVAL @ 177°C (INTERNAL IN A KICK SITUATION) SAFETY EQUIPMENT: INCLUDED 2 X HOSE SAFETY CLAMPS 2 X 3.6T SHACKLES 2 X 10MM OD X 6FT PCP COATED CHAINS HOSE ASSEMBLYY WORKS ORDERS NUMBERS: 139051 139052 139053 139054 139321	139062 139063 139064 139065 139244	5
	SAFETY/LIFTER CLAMP 195MM 1.7T PART NO: HCC108	MYB59483	10
	SAFETY CHAIN 10MM C/S PCP 6FT PART NO: CHC001	ACU59481	10

QA JW D. Watkins 06 DEC 2022

Accepted by..... **for and on behalf of Gates Engineering & Services UK Ltd**

Gates Engineering & Services UK Ltd		PRESSURE TEST CERTIFICATE	Gates
Doc. Ref.	Form-051		
Revision	9		

	Certificate No:
☐ BURST ☑ HYDROSTATIC ☐ CYCLIC	PTC-139321

Product:	CK03F	**Hose WO/Batch:**	139244
Assembly WO:	139321	**Length:**	35FT
SO No:	34557	**Date:**	25/11/22
Customer:	Gates Engineering & Services NA Inc	**Customer Reference:**	PO 1803964/ 1

Inner Diameter:	3	**Inch**		
Working Pressure:	10000	**Psi**	690	**bar**
Test Pressure:	15000	**Psi**	1034	**bar**
Burst Pressure:	22500	**Psi**	1551	**bar**

Hose Description:	3" 10K API 16C CHOKE & KILL HOSE ASSEMBLY X 35FT OAL END A: 4.1/16" 10K API SPEC 6A TYPE FLANGE WITH BX155 RING GROOVE END B: 4.1/16" 10K API SPEC 17D SV SWIVEL FLANGE WITH BX155 RING GROOVE	
Item No	**Qty**	**Part Code**	**Customer Tag No (if applicable)**
1	1	HA34539-001	N/A

Details of Test:	Pressure tested with water at ambient temperature for a minimum of **60** minutes at test pressure **1034 BAR** Pressure Transducer S/N: 131203 (CH1) Chart Recorder S/N: S5VB14523 Calibration Certificate No: IKMCERTU823
Results:	Pressure Loss: **8.43 BAR** Acceptance Criteria: Pressure loss not to exceed **500 PSI (34.47 BAR)**

GESUK Ltd	Third Party
QA JW J. Wilson 06 DEC 2022	

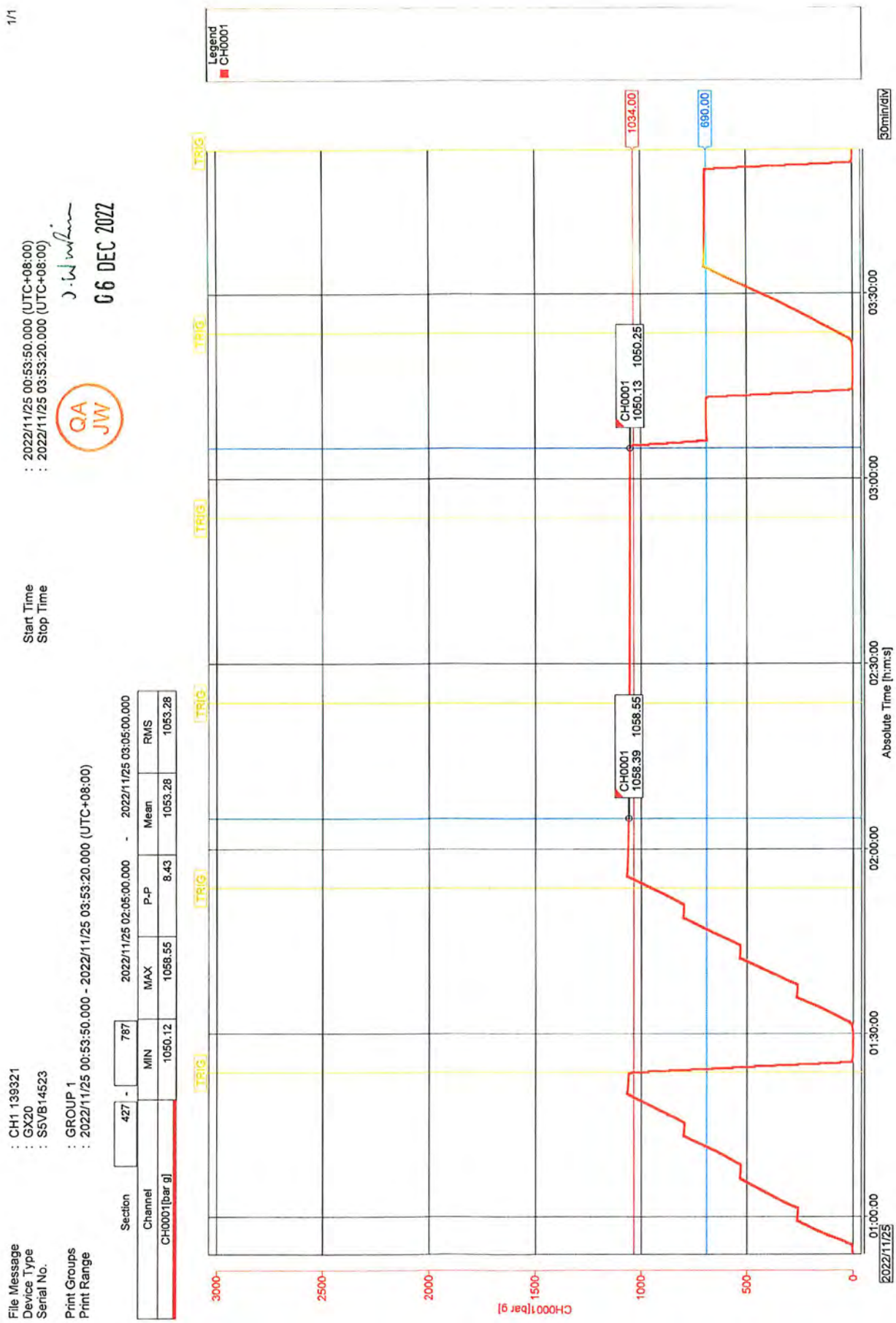
1/1
File Message : CH1 139321
Device Type : GX20
Serial No. : S5VB14523
Print Groups : GROUP 1
Print Range : 2022/11/25 00:53:50.000 - 2022/11/25 03:53:20.000 (UTC+08:00)
Start Time : 2022/11/25 00:53:50.000 (UTC+08:00)
Stop Time : 2022/11/25 03:53:20.000 (UTC+08:00)
QA JW
06 DEC 2022
Section 427 - 787 2022/11/25 02:05:00.000 - 2022/11/25 03:05:00.000
Channel MIN MAX P-P Mean RMS
CH0001[Bar g] 1050.12 1058.55 8.43 1053.28 1053.28
Legend
CH0001
1034.00
690.00
CH0001 1058.39 1058.55
CH0001 1050.13 1050.25
TRIG
30min/div
CH0001[Bar g]
Absolute Time [h:m:s]
2022/11/25
01:00:00
01:30:00
02:00:00
02:30:00
03:00:00
03:30:00
0
500
1000
1500
2000
2500
3000

eog resources

EOG Batch Casing

Pad Name: Never Better 14 Fed Com

SHL: Section 14, Township 22-S, Range 32-E, Lea County, NM

Well Name	API #	Surface		Intermediate		Production	
		MD	TVD	MD	TVD	MD	TVD
Never Better 14 Fed Com #601H	30-025-*****	1,100	1,100	11,195	11,098	22,252	11,950
Never Better 14 Fed Com #602H	30-025-*****	1,100	1,100	11,139	11,098	22,202	11,950
Never Better 14 Fed Com #603H	30-025-*****	1,100	1,100	11,174	11,098	22,236	11,950
Never Better 14 Fed Com #604H	30-025-*****	1,100	1,100	11,354	11,098	22,391	11,950
Never Better 14 Fed Com #701H	30-025-*****	1,100	1,100	11,169	11,098	22,425	12,150
Never Better 14 Fed Com #702H	30-025-*****	1,100	1,100	11,235	11,098	22,487	12,150
Never Better 14 Fed Com #703H	30-025-*****	1,100	1,100	11,145	11,098	22,408	12,150
Never Better 14 Fed Com #704H	30-025-*****	1,100	1,100	11,155	11,098	22,418	12,150
Never Better 14 Fed Com #705H	30-025-*****	1,100	1,100	11,149	11,098	22,412	12,150
Never Better 14 Fed Com #706H	30-025-*****	1,100	1,100	11,228	11,098	22,485	12,150
Never Better 14 Fed Com #707H	30-025-*****	1,100	1,100	11,301	11,098	22,547	12,150
Never Better 14 Fed Com #708H	30-025-*****	1,100	1,100	11,430	11,098	22,650	12,150
Never Better 14 Fed Com #721H	30-025-*****	1,100	1,100	11,192	11,098	22,568	12,270
Never Better 14 Fed Com #722H	30-025-*****	1,100	1,100	11,120	11,098	22,502	12,270
Never Better 14 Fed Com #723H	30-025-*****	1,100	1,100	11,185	11,098	22,566	12,270
Never Better 14 Fed Com #724H	30-025-*****	1,100	1,100	11,199	11,098	22,580	12,270
Never Better 14 Fed Com #725H	30-025-*****	1,100	1,100	11,179	11,098	22,561	12,270
Never Better 14 Fed Com #726H	30-025-*****	1,100	1,100	11,305	11,098	22,670	12,270
Never Better 14 Fed Com #727H	30-025-*****	1,100	1,100	11,354	11,098	22,710	12,270

EOG Batch Casing

Variances

EOG requests the additional variance(s) in the attached document(s):

- EOG BLM Variance 3a_b - BOP Break-test and Offline Intermediate Cement
- EOG BLM Variance 2a - Inermediate Bradenhead Cement

eog resources

EOG Batch Casing

GEOLOGIC NAME OF SURFACE FORMATION:

Permian

ESTIMATED TOPS OF IMPORTANT GEOLOGICAL MARKERS:

Rustler	976'
Tamarisk Anhydrite	1,079'
Top of Salt	1,288'
Base of Salt	4,543'
Capitan	4,855'
Bell Canyon	4,906'
Cherry Canyon	5,790'
Brushy Canyon	6,991'
Bone Spring Lime	8,764'
Leonard (Avalon) Shale	8,918'
1st Bone Spring Sand	9,923'
2nd Bone Spring Shale	10,185'
2nd Bone Spring Sand	10,453'
3rd Bone Spring Carb	10,998'
3rd Bone Spring Sand	11,673'
Wolfcamp	12,019'

ESTIMATED DEPTHS OF ANTICIPATED FRESH WATER, OIL OR GAS:

Upper Permian Sands	0- 400’	Fresh Water
Bell Canyon	4,906'	Oil
Cherry Canyon	5,790'	Oil
Brushy Canyon	6,991'	Oil
Leonard (Avalon) Shale	8,918'	Oil
1st Bone Spring Sand	9,923'	Oil
2nd Bone Spring Shale	10,185'	Oil
2nd Bone Spring Sand	10,453'	Oil

No other formations are expected to give up oil, gas or fresh water in measurable quantities. Surface fresh water sands will be protected by setting surface casing at 1,100' and circulating cement back to surface.

Released to Imaging: 11/13/2026 9:51:12 AM

Received by OCD: 10/28/2026 2:09:08 PM

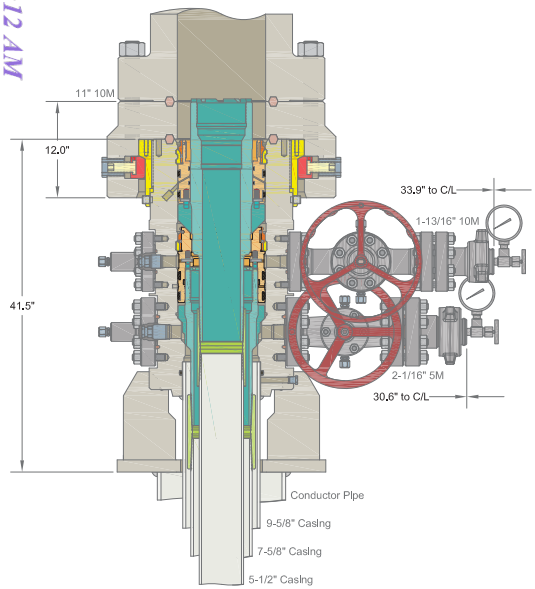

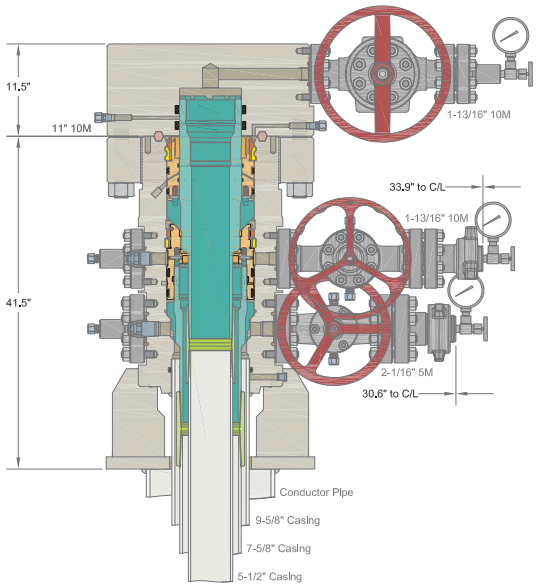

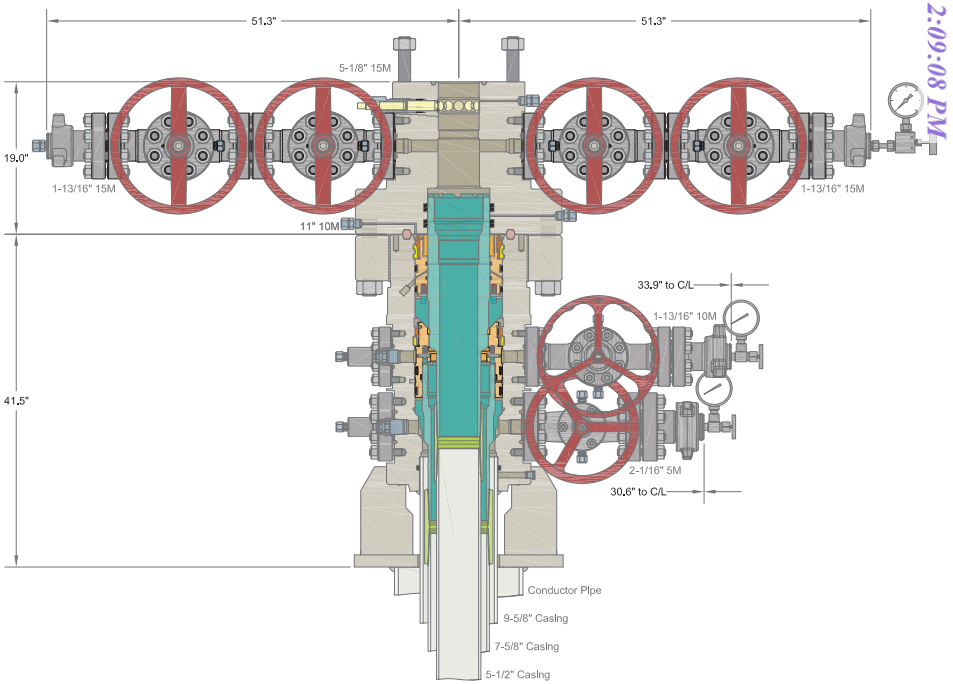

INFORMATION CONTAINED HEREIN IS THE PROPERTY OF CACTUS WELLHEAD, LLC. REPRODUCTION, DISCLOSURE, OR USE THEREOF IS PERMISSIBLE ONLY AS PROVIDED BY CONTRACT OR AS EXPRESSLY AUTHORIZED BY CACTUS WELLHEAD, LLC.

ALL DIMENSIONS APPROXIMATE

CACTUS WELLHEAD LLC

EOG RESOURCES
DELAWARE

20" x 9-5/8" x 7-5/8" x 5-1/2" MBU-T-SF SOW Wellhead System
With 11" 10M x 5-1/8" 15M CMT-DBLHPS-SB Tubing Head,
Mandrel Hangers, Quick Connect Drilling Adapter And TA Cap

DRAWN	DLE	23OCT18
APPRV		

DRAWING NO. HBE0000010

10,000 PSI BOP Annular
Variance Request

EOG Resources request a variance to use a 5000 psi annular BOP with a 10,000 psi BOP stack. The component and compatibility tables along with the general well control plans demonstrate how the 5000 psi annular BOP will be protected from pressures that exceed its rated working pressure (RWP). The pressure at which the control of the wellbore is transferred from the annular preventer to another available preventer will not exceed 3500 psi (70% of the RWP of the 5000 psi annular BOP).

1. Component and Preventer Compatibility Tables

The tables below outlines the tubulars and the compatible preventers in use. This table, combined with the drilling fluid, documents that two barriers to flow will be maintained at all times.

9-7/8" & 8-3/4" Intermediate Hole Section 10M psi requirement					
Component	**OD**	**Primary Preventer**	**RWP**	**Alternate Preventer(s)**	**RWP**
Drillpipe	4.500"	Annular	5M	Upper 3.5 - 5.5" VBR Lower 3.5 - 5.5" VBR	10M 10M
HWDP	4.500"	Annular	5M	Upper 3.5 - 5.5" VBR Lower 3.5 - 5.5" VBR	10M 10M
Jars	4.500"	Annular	5M	Upper 3.5 - 5.5" VBR Lower 3.5 - 5.5" VBR	10M 10M
DCs and MWD tools	6.500 – 8.000"	Annular	5M	-	-
Mud Motor	6.750 – 8.000"	Annular	5M	-	-
Intermediate casing	7.625"	Annular	5M	-	-
Open-hole	-	Blind Rams	10M	-	-

6-3/4" Production Hole Section 10M psi requirement					
Component	**OD**	**Primary Preventer**	**RWP**	**Alternate Preventer(s)**	**RWP**
Drillpipe	4.500"	Annular	5M	Upper 3.5 - 5.5" VBR Lower 3.5 - 5.5" VBR	10M 10M
HWDP	4.500"	Annular	5M	Upper 3.5 - 5.5" VBR Lower 3.5 - 5.5" VBR	10M 10M
DCs and MWD tools	4.750 – 5.500"	Annular	5M	Upper 3.5 - 5.5" VBR Lower 3.5 - 5.5" VBR	10M 10M
Mud Motor	4.750 – 5.500"	Annular	5M	Upper 3.5 - 5.5" VBR Lower 3.5 - 5.5" VBR	10M 10M
Mud Motor	5.500 – 5.750"	Annular	5M	-	-
Production casing	5.500"	Annular	5M	Upper 3.5 - 5.5" VBR Lower 3.5 - 5.5" VBR	10M 10M
Open-hole	-	Blind Rams	10M	-	-

VBR = Variable Bore Ram

EOG Resources
11” 10M PSI BOP Stack

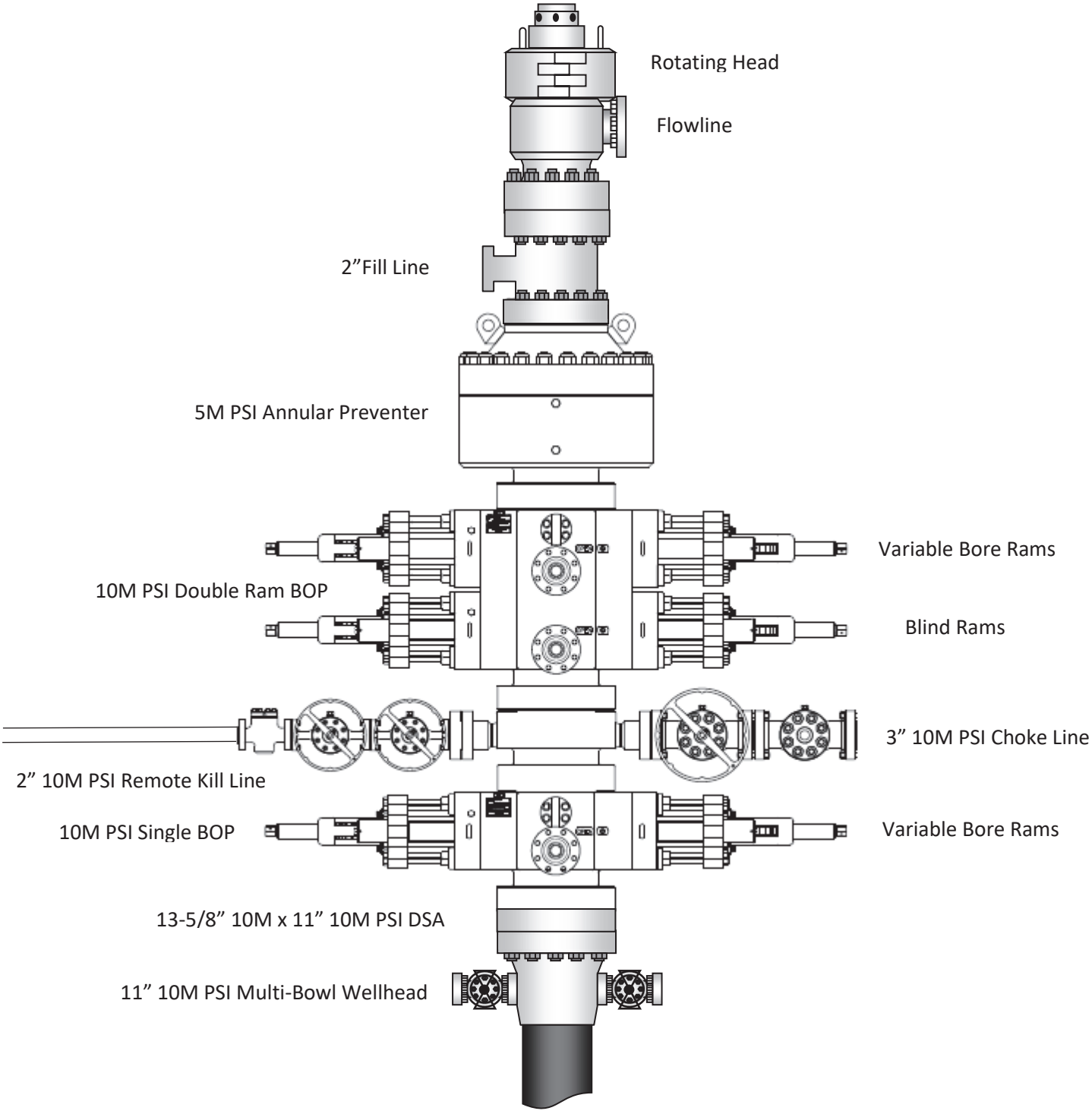

2. Well Control Procedures

Below are the minimal high-level tasks prescribed to assure a proper shut-in while drilling, tripping, running casing, pipe out of the hole (open hole), and moving the BHA through the BOPs. At least one well control drill will be performed weekly per crew to demonstrate compliance with the procedure and well control plan. The well control drill will be recorded in the daily drilling log. The type of drill will be determined by the ongoing operations, but reasonable attempts will be made to vary the type of drill conducted (pit, trip, open hole, choke, etc.). This well control plan will be available for review by rig personnel in the EOG Resources drilling supervisor's office on location, and on the rig floor. All BOP equipment will be tested as per Onshore O&G Order No. 2 with the exception of the 5000 psi annular which will be tested to 100% of its RWP.

General Procedure While Drilling

1. Sound alarm (alert crew)
2. Space out drill string
3. Shut down pumps (stop pumps and rotary)
4. Shut-in Well (uppermost applicable BOP, typically annular preventer first. HCR and choke will already be in the closed position.)
5. Confirm shut-in
6. Notify toolpusher/company representative
7. Read and record the following:
    a. SIDPP and SICP
    b. Pit gain
    c. Time
8. Regroup and identify forward plan
9. If pressure has built or is anticipated during the kill to reach 70% or greater of the RWP of the annular preventer, confirm spacing and close the upper variable bore rams.

General Procedure While Tripping

1. Sound alarm (alert crew)
2. Stab full opening safety valve and close
3. Space out drill string
4. Shut-in (uppermost applicable BOP, typically annular preventer first. HCR and choke will already be in the closed position.)
5. Confirm shut-in
6. Notify toolpusher/company representative
7. Read and record the following:
    a. SIDPP and SICP
    b. Pit gain
    c. Time
8. Regroup and identify forward plan
9. If pressure has built or is anticipated during the kill to reach 70% or greater of the RWP of the annular preventer, confirm spacing and close the upper variable bore rams.

General Procedure While Running Production Casing

1. Sound alarm (alert crew)
2. Stab crossover and full opening safety valve and close
3. Space out string

4. Shut-in (uppermost applicable BOP, typically annular preventer first. HCR and choke will already be in the closed position.)
5. Confirm shut-in
6. Notify toolpusher/company representative
7. Read and record the following:
    a. SIDPP and SICP
    b. Pit gain
    c. Time
8. Regroup and identify forward plan
9. If pressure has built or is anticipated during the kill to reach 70% or greater of the RWP of the annular preventer, confirm spacing and close the upper variable bore rams.

General Procedure With No Pipe In Hole (Open Hole)

1. Sound alarm (alert crew)
2. Shut-in with blind rams. (HCR and choke will already be in the closed position.)
3. Confirm shut-in
4. Notify toolpusher/company representative
5. Read and record the following:
    a. SICP
    b. Pit gain
    c. Time
6. Regroup and identify forward plan

General Procedures While Pulling BHA thru Stack

1. PRIOR to pulling last joint of drillpipe thru the stack.
    a. Perform flowcheck, if flowing:
    b. Sound alarm (alert crew)
    c. Stab full opening safety valve and close
    d. Space out drill string with tool joint just beneath the upper variable bore rams.
    e. Shut-in using upper variable bore rams. (HCR and choke will already be in the closed position.)
    f. Confirm shut-in
    g. Notify toolpusher/company representative
    h. Read and record the following:
        i. SIDPP and SICP
        ii. Pit gain
        iii. Time
    i. Regroup and identify forward plan

2. With BHA in the stack and compatible ram preventer and pipe combo immediately available.
    a. Sound alarm (alert crew)
    b. Stab crossover and full opening safety valve and close
    c. Space out drill string with upset just beneath the upper variable bore rams.
    d. Shut-in using upper variable bore rams. (HCR and choke will already be in the closed position.)
    e. Confirm shut-in
    f. Notify toolpusher/company representative
    g. Read and record the following:
        i. SIDPP and SICP

ii. Pit gain
iii. Time

h. Regroup and identify forward plan

3. With BHA in the stack and NO compatible ram preventer and pipe combo immediately available.
   a. Sound alarm (alert crew)
   b. If possible to pick up high enough, pull string clear of the stack and follow "Open Hole" scenario.
   c. If impossible to pick up high enough to pull the string clear of the stack:
   d. Stab crossover, make up one joint/stand of drillpipe, and full opening safety valve and close
   e. Space out drill string with tooljoint just beneath the upper variable bore ram.
   f. Shut-in using upper variable bore ram. (HCR and choke will already be in the closed position.)
   g. Confirm shut-in
   h. Notify toolpusher/company representative
   i. Read and record the following:
      i. SIDPP and SICP
      ii. Pit gain
      iii. Time
   j. Regroup and identify forward plan

eog resources

Offline Intermediate Cementing Procedure 2/24/2022

Cement Program

1. No changes to the cement program will take place for offline cementing.

Summarized Operational Procedure for Intermediate Casing

1. Run casing as per normal operations. While running casing, conduct negative pressure test and confirm integrity of the float equipment back pressure valves.
    a. Float equipment is equipped with two back pressure valves rated to a minimum of 5,000 psi.
2. Land production casing on mandrel hanger through BOP.
    a. If casing is unable to be landed with a mandrel hanger, then the **casing will be cemented online**.
3. Break circulation and confirm no restrictions.
    a. Ensure no blockage of float equipment and appropriate annular returns.
    b. Perform flow check to confirm well is static.
4. Set pack-off
    a. If utilizing a fluted/ported mandrel hanger, ensure well is static on the annulus and inside the casing by filling the pipe with kill weight fluid, remove landing joint, and set annular packoff through BOP. Pressure test to 5,000 psi for 10 min.
    b. If utilizing a solid mandrel hanger, ensure well is static on the annulus and inside the casing by filling the pipe with kill weight fluid. Pressure test seals to 5,000 psi for 10 min. Remove landing joint through BOP.
5. After confirmation of both annular barriers and the two casing barriers, install TA plug and pressure test to 5,000 psi for 10 min. Notify the BLM with intent to proceed with nipple down and offline cementing.
    a. Minimum 4 hrs notice.
6. With the well secured and BLM notified, nipple down BOP and secure on hydraulic carrier or cradle.
    a. **Note, if any of the barriers fail to test, the BOP stack will not be nippled down until after the cement job has concluded and both lead and tail slurry have reached 500 psi.**
7. Skid/Walk rig off current well.
8. Confirm well is static before removing TA Plug.
    a. Cementing operations will not proceed until well is under control. (If well is not static, notify BLM and proceed to kill)
    b. Casing outlet valves will provide access to both the casing ID and annulus. Rig or third party pump truck will kill well prior to cementing.
    c. Well control plan can be seen in Section B, Well Control Procedures.
    d. If need be, rig can be moved back over well and BOP nippled back up for any further remediation.

e. Diagram for rig positioning relative to offline cementing can be seen in Figure 4.

9. Rig up return lines to take returns from wellhead to pits and rig choke.
    a. Test all connections and lines from wellhead to choke manifold to 5,000 psi high for 10 min.
    b. If either test fails, perform corrections and retest before proceeding.
    c. Return line schematics can be seen in Figure 3.
10. Remove TA Plug from the casing.
11. Install offline cement tool.
    a. Current offline cement tool schematics can be seen in Figure 1 (Cameron) and Figure 2 (Cactus).
12. Rig up cement head and cementing lines.
    a. Pressure test cement lines against cement head to 80% of casing burst for 10 min.
13. Break circulation on well to confirm no restrictions.
    a. If gas is present on circulation, well will be shut in and returns rerouted through gas buster.
    b. Max anticipated time before circulating with cement truck is 6 hrs.
14. Pump cement job as per plan.
    a. At plug bump, test casing to 0.22 psi/ft or 1500 psi, whichever is greater.
    b. If plug does not bump on calculated, shut down and wait 8 hrs or 500 psi compressive strength, whichever is greater before testing casing.
15. Confirm well is static and floats are holding after cement job.
    a. With floats holding and backside static:
        i. Remove cement head.
    b. If floats are leaking:
        i. Shut-in well and WOC (Wait on Cement) until tail slurry reaches 500 psi compressive strength and the casing is static prior to removing cement head.
    c. If there is flow on the backside:
        i. Shut in well and WOC until tail slurry reaches 500 psi compressive strength. Ensure that the casing is static prior to removing cement head.
16. Remove offline cement tool.
17. Install night cap with pressure gauge for monitoring.
18. Test night cap to 5,000 psi for 10 min.

Example Well Control Plan Content

A. Well Control Component Table

The table below, which covers the cementing of the **5M MASP (Maximum Allowable Surface Pressure) portion of the well**, outlines the well control component rating in use. This table, combined with the mud program, documents that two barriers to flow can be maintained at all times, independent of the BOP nippled up to the wellhead.

Intermediate hole section, 5M requirement

Component	RWP
Pack-off	10M
Casing Wellhead Valves	10M
Annular Wellhead Valves	5M
TA Plug	10M
Float Valves	5M
2” 1502 Lo-Torque Valves	15M

B. Well Control Procedures

Well control procedures are specific to the rig equipment and the operation at the time the kick occurs. Below are the minimal high-level tasks prescribed to assure a proper shut-in while circulating and cementing through the Offline Cement Adapter.

General Procedure While Circulating

1. Sound alarm (alert crew).
2. Shut down pumps.
3. Shut-in Well (close valves to rig pits and open valve to rig choke line. Rig choke will already be in the closed position).
4. Confirm shut-in.
5. Notify tool pusher/company representative.

6. Read and record the following:
    a. SICP (Shut in Casing Pressure) and AP (Annular Pressure)
    b. Pit gain
    c. Time
    d. Regroup and identify forward plan to continue circulating out kick via rig choke and mud/gas separator. Circulate and adjust mud density as needed to control well.

General Procedure While Cementing

1. Sound alarm (alert crew).
2. Shut down pumps.
3. Shut-in Well (close valves to rig pits and open valve to rig choke line. Rig choke will already be in the closed position).
4. Confirm shut-in.
5. Notify tool pusher/company representative.
6. Open rig choke and begin pumping again taking returns through choke manifold and mud/gas separator.
7. Continue to place cement until plug bumps.
8. At plug bump close rig choke and cement head.
9. Read and record the following
    a. SICP and AP
    b. Pit gain
    c. Time
    d. Shut-in annulus valves on wellhead

General Procedure After Cementing

1. Sound alarm (alert crew).
2. Shut-in Well (close valves to rig pits and open valve to rig choke line. Rig choke will already be in the closed position).
3. Confirm shut-in.
4. Notify tool pusher/company representative.
5. Read and record the following:
    a. SICP and AP
    b. Pit gain
    c. Time
    d. Shut-in annulus valves on wellhead

Figure 1: Cameron TA Plug and Offline Adapter Schematic

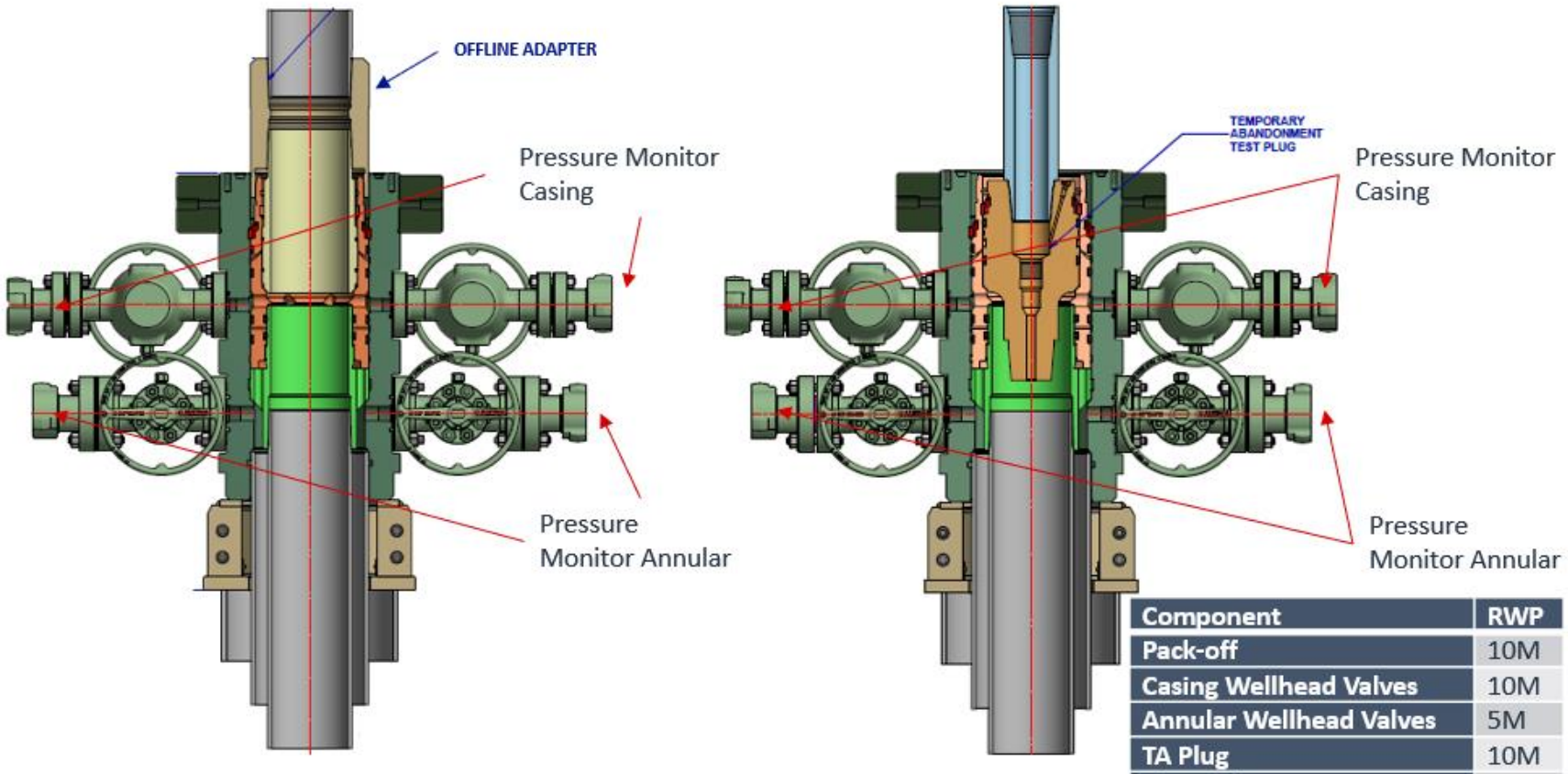

Component	RWP
Pack-off	10M
Casing Wellhead Valves	10M
Annular Wellhead Valves	5M
TA Plug	10M
Float Valves	5M
2" 1502 Lo-Torque Valves	15M

Figure 2: Cactus TA Plug and Offline Adapter Schematic

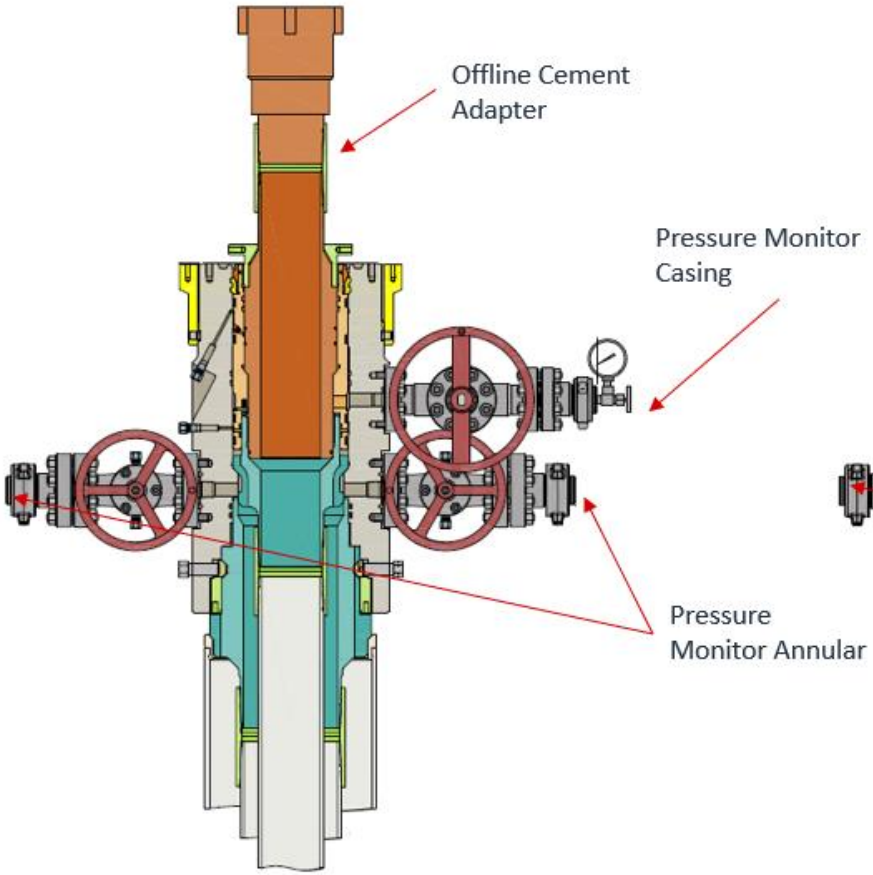

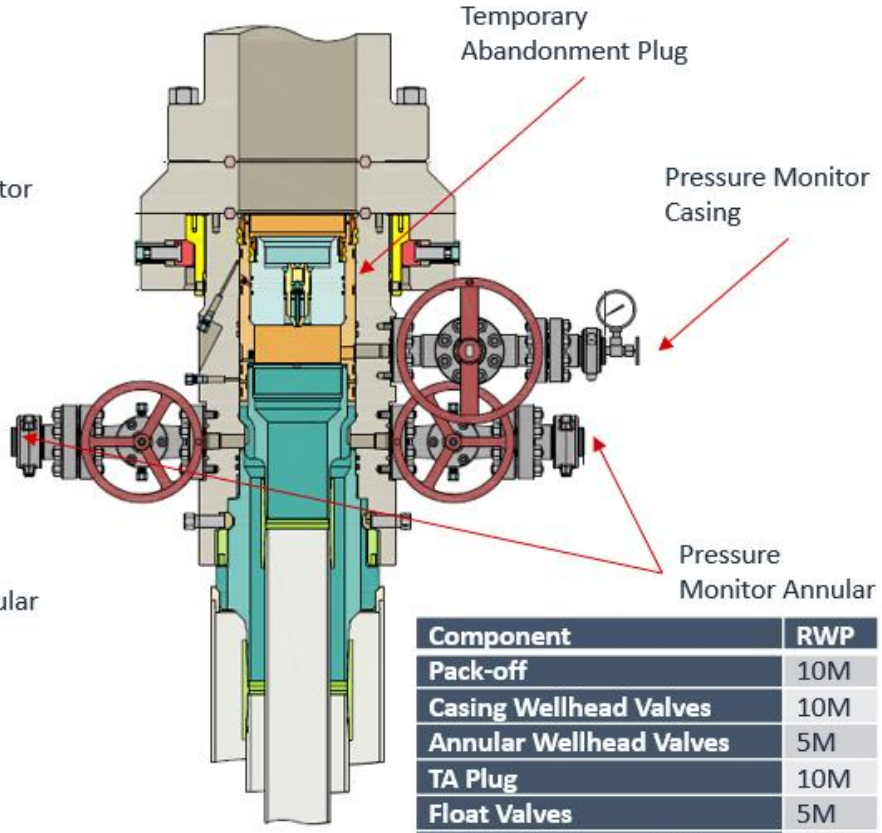

Component	RWP
Pack-off	10M
Casing Wellhead Valves	10M
Annular Wellhead Valves	5M
TA Plug	10M
Float Valves	5M
2" 1502 Lo-Torque Valves	15M

Figure 3: Back Yard Rig Up

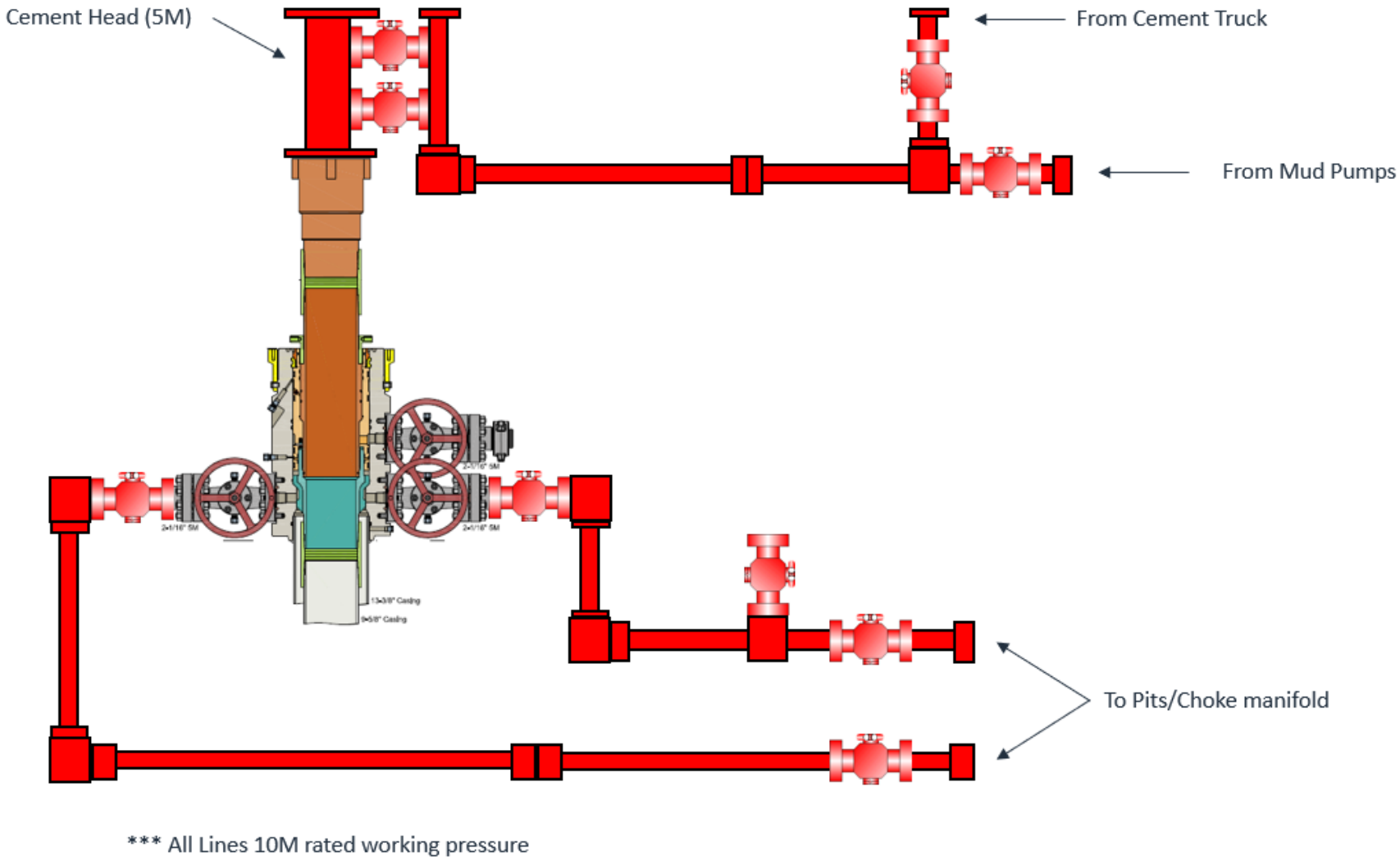

Figure 4: Rig Placement Diagram

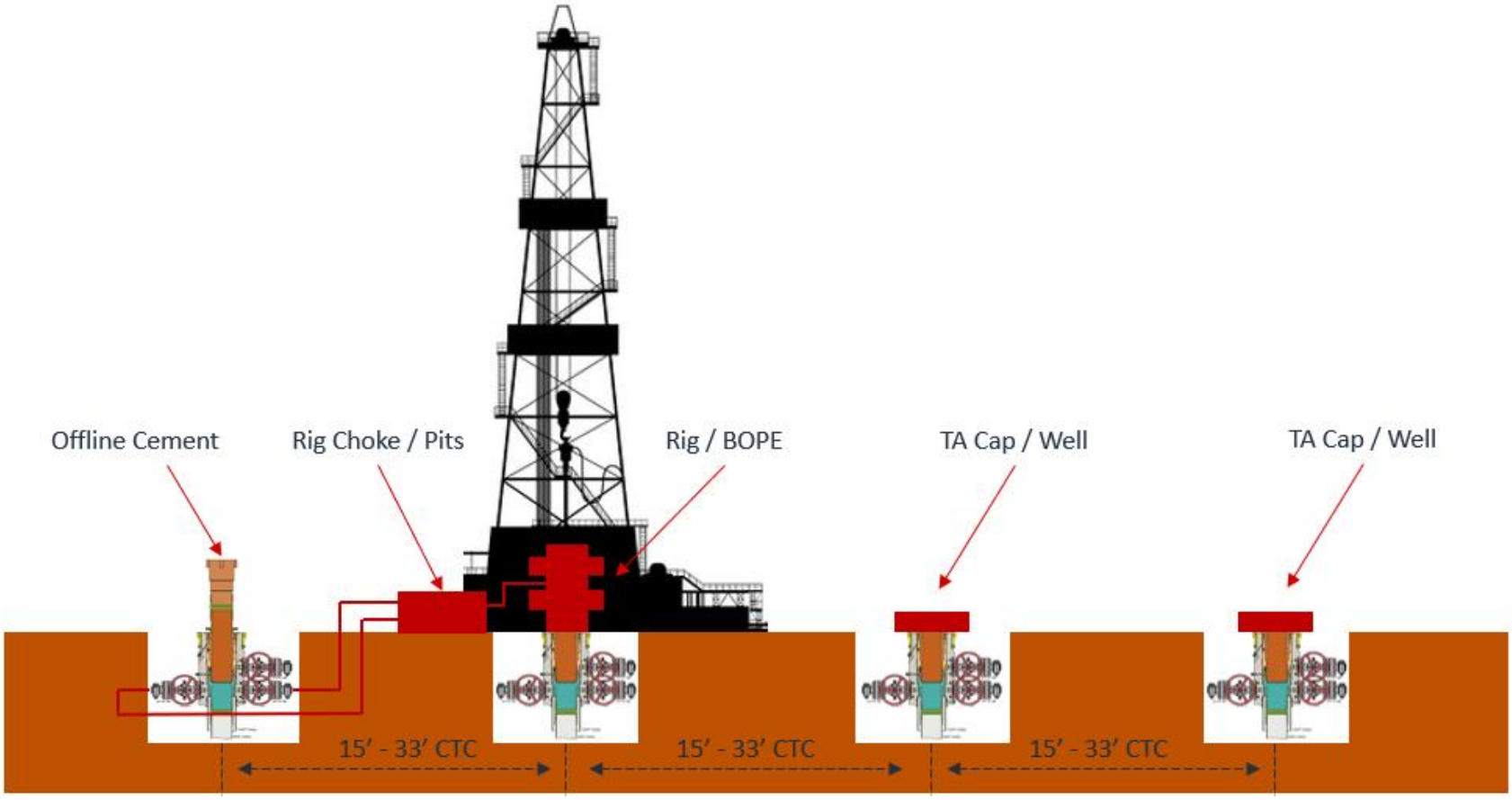

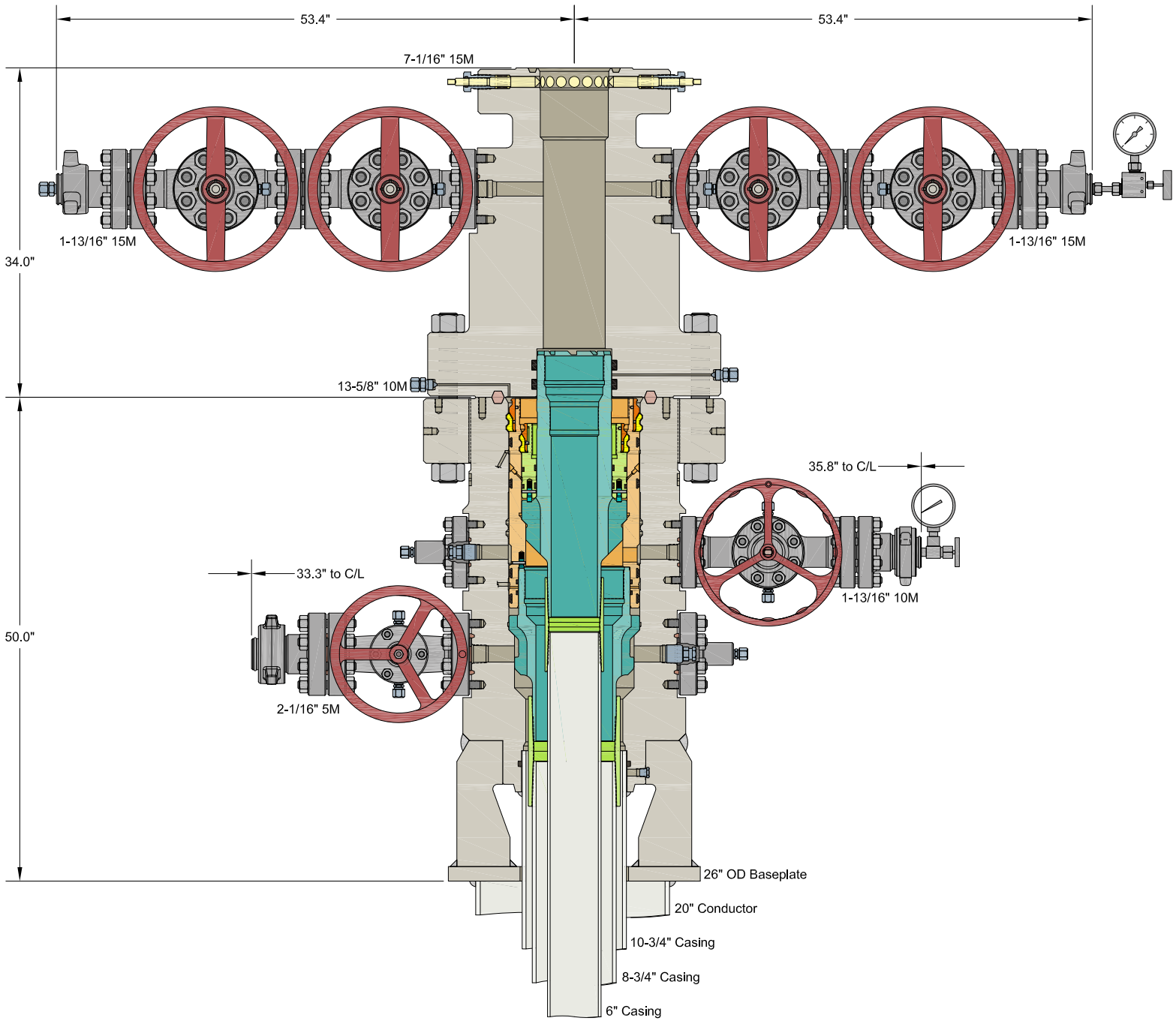

INFORMATION CONTAINED HEREIN IS THE PROPERTY OF CACTUS WELLHEAD, LLC. REPRODUCTION, DISCLOSURE, OR USE THEREOF IS PERMISSIBLE ONLY AS PROVIDED BY CONTRACT OR AS EXPRESSLY AUTHORIZED BY CACTUS WELLHEAD, LLC.

ALL DIMENSIONS APPROXIMATE

CACTUS WELLHEAD LLC	EOG RESOURCES		
10-3/4" x 8-3/4" x 6" MBU-3T-SF-SOW Wellhead System With 8-5/8" & 6" Pin Bottom Mandrel Casing Hangers And 13-5/8" 10M x 7-1/16" 15M CTH-DBLHPS Tubing Head	DRAWN	DLE	14APR21
	APPRV		
	DRAWING NO.	SDT-3141-1	

VARIANCE REQUEST LIST

Variance is requested to waive the centralizer requirements for the 7-5/8" casing in the 8-3/4" hole size. An expansion additive will be utilized, in the cement slurry, for the entire length of the 8-3/4 hole interval to maximize cement bond and zonal isolation.

Variance is also requested to waive any centralizer requirements for the 5-1/2'' casing in the 6-3/4'' hole size. An expansion additive will be utilized, in the cement slurry, for the entire length of the 6-3/4'' hole interval to maximize cement bond and zonal isolation.

Variance is also requested to waive the annular clearance requirements for the 5-1/2'' casing by 7-5/8'' casing annulus to the proposed top of cement.

EOG requests permission to allow deviation from the 0.422'' annulus clearance requirement from Onshore Order #2 under the following conditions:
- Annular clearance to meet or exceed 0.422'' between intermediate casing ID and production casing coupling only on the first 500' overlap between both casing strings.
- Annular clearance less than 0.422'' is acceptable for the production open hole section.

EOG requests variance from minimum standards to pump a two stage cement job on the 7-5/8'' intermediate casing string with the first stage being pumped conventionally with the calculated top of cement at the Brushy Canyon (7,520') and the second stage performed as a 1000 sack bradenhead squeeze with planned cement from the Brushy Canyon to surface. If necessary, a top out consisting of 250 sacks of Class C cement + 3% Salt + 1% PreMag-M + 6% Bentonite Gel (2.30 yld, 12.91 ppg) will be executed as a contingency. Top will be verified by Echo-meter.

Variance is requested to use a co-flex line between the BOP and choke manifold (instead of using a 4" OD steel line).

Variance is requested to use a 5,000 psi annular BOP with the 10,000 psi BOP stack.

EOG Resources Inc. (EOG) respectfully requests a variance from the minimum standards for well control equipment testing of Onshore Order No. 2 (item III.A.2.a.i) to allow a testing schedule of the blow out preventer (BOP) and blow out prevention equipment (BOPE) along with Batch Drilling & Offline cement operations to include the following:

- Full BOPE test at first installation on the pad.
- Full BOPE test every 21 days per Onshore Order No. 2.
- Function test BOP elements per Onshore Order No. 2.

VARIANCE REQUEST LIST

- Break testing BOP and BOPE coupled with batch drilling operations and option to offline cement and/or remediate (if needed) any surface or intermediate sections, according to attached offline cementing support documentation.
- After the well section is secured, the BOP will be disconnected from the wellhead and walked with the rig to another well on the pad.
- TA cap will also be installed per Wellhead vendor procedure and pressure inside the casing will be monitored via the valve on the TA cap as per standard batch drilling ops.
- See attached "EOG BLM Variance 3a -Offline Cement Intermediate Operational Procedure"

EOG respectively requests an exception to the following NMOCD rule:
• 19.15.16.10 Casing AND TUBING RQUIREMENTS:
J (3): “The operator shall set tubing as near the bottom as practical and tubing perforations shall not be more than 250 feet above top of pay zone.”
With horizontal flowing and gas lifted wells an end of tubing depth placed at or slightly above KOP is a conservative way to ensure the tubing stays clean from debris, plugging, and allows for fewer well interventions post offset completion. The deeper the tubulars are run into the curve, the higher the probability is that the tubing will become stuck in sand and or well debris as the well produces over time. An additional consideration for EOT placement during artificial lift installations is avoiding the high dog leg severity and inclinations found in the curve section of the wellbore to help improve reliability and performance. Dog leg severity and inclinations tend not to hamper gas lifted or flowing wells, but they do effect other forms of artificial lift like rod pump or ESP (electric submersible pump). Keeping the EOT above KOP is an industry best practice for those respective forms of artificial lift.

Variance is requested to waive the centralizer requirements for the 8-3/4" casing in the 9-7/8" hole size. An expansion additive will be utilized, in the cement slurry, for the entire length of the 9-7/8'' hole interval to maximize cement bond and zonal isolation.

Variance is also requested to waive any centralizer requirements for the 6'' casing in the 7-7/8'' hole size. An expansion additive will be utilized, in the cement slurry, for the entire length of the 7-7/8'' hole interval to maximize cement bond and zonal isolation.
Variance is also requested to waive the annular clearance requirements for the 6'' casing by 8-3/4'' casing annulus to the proposed top of cement.

EOG requests permission to allow deviation from the 0.422’’ annulus clearance requirement from Onshore Order #2 under the following conditions:
- Annular clearance to meet or exceed 0.422’’ between intermediate casing ID and production casing coupling only on the first 500’ overlap between both casing strings.
- Annular clearance less than 0.422’’ is acceptable for the production open hole section.

EOG requests variance from minimum standards to pump a two stage cement job on the 8-3/4'' intermediate casing string with the first stage being pumped conventionally with the

VARIANCE REQUEST LIST

calculated top of cement at the Brushy Canyon (7,520') and the second stage performed as a 1000 sack bradenhead squeeze with planned cement from the Brushy Canyon to surface. If necessary, a top out consisting of 420 sacks of Class C cement + 3% Salt + 1% PreMag-M + 6% Bentonite Gel (2.30 yld, 12.91 ppg) will be executed as a contingency. Top will be verified by Echo-meter.

Never Better 14 Fed Com 723H API #: 30-025-*** Variances**

EOG respectfully requests the below variances to be applied to the above well:

- Variance is requested to waive the centralizer requirements for the intermediate casing in the intermediate hole. An expansion additive will be utilized, in the cement slurry, for the entire length of the intermediate interval to maximize cement bond and zonal isolation.
- Variance is also requested to waive the centralizer requirements for the production casing in the production hole. An expansion additive will be utilized, in the cement slurry, for the entire length of the production interval to maximize cement bond and zonal isolation.

- Variance is requested to use a co-flex line between the BOP and choke manifold (instead of using a 4" OD steel line).
- Variance is requested to use a 5,000 psi annular BOP with the 10,000 psi BOP stack.
- EOG Resources requests the option to contract a Surface Rig to drill, set surface casing, and Cement on the subject well. After WOC 8 hours or 500 psi compressive strength (whichever is greater), the Surface Rig will move off so the wellhead can be installed. A welder will cut the casing to the proper height and weld on the wellhead (both "A" and "B" sections). The weld will be tested to 1,500 psi. All valves will be closed and a wellhead cap will be installed (diagram attached). If the timing between rigs is such that EOG Resources would not be able to preset the surface, the Primary Rig will MIRU and drill the well in its entirety per the APD.

EOG requests the additional variance(s) in the attached document(s):

- EOG BLM Variance 3a_b - BOP Break-test and Offline Intermediate Cement
- EOG BLM Variance 2a - Inermediate Bradenhead Cement

Metal One Corp.	MO-FXL	Page	MCTP
Metal One	Connection Data Sheet	Date	3-Nov-16
		Rev.	0

Geometry

MO-FXL

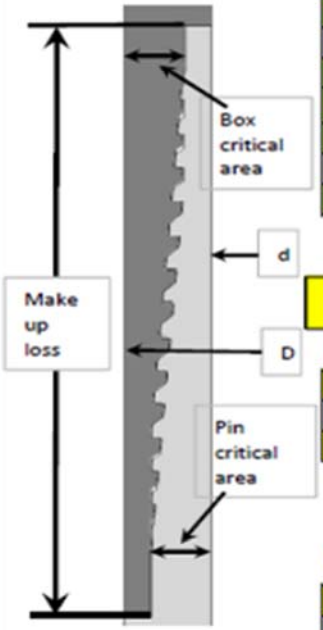

Pipe Body

	Imperial		S.I.	
Grade	P110HC *1		P110HC *1	
Pipe OD (D)	7 5/8	in	193.68	mm
Weight	29.70	lb/ft	44.25	kg/m
Actual weight	29.04		43.26	kg/m
Wall Thickness (t)	0.375	in	9.53	mm
Pipe ID (d)	6.875	in	174.63	mm
Pipe body cross section	8.537	in^2	5,508	mm^2
Drift Dia.	6.750	in	171.45	mm

Connection

Box OD (W)	7.625	in	193.68	mm
PIN ID	6.875	in	174.63	mm
Make up Loss	4.219	in	107.16	mm
Box Critical Area	5.714	in^2	3686	mm^2
Joint load efficiency	70	%	70	%
Thread Taper	1 / 10 (1.2" per ft)			
Number of Threads	5 TPI			

Performance

Performance Properties for Pipe Body

S.M.Y.S. *1	1,067	kips	4,747	kN
M.I.Y.P. *1	10,760	psi	74.21	MPa
Collapse Strength *1	7,360	psi	50.76	MPa

Note S.M.Y.S.= Specified Minimum YIELD Strength of Pipe body
M.I.Y.P. = Minimum Internal Yield Pressure of Pipe body
*1 Based on VSB P110HC (YS=125~140ksi)

Performance Properties for Connection

Tensile Yield load	747 kips (70% of S.M.Y.S.)
Min. Compression Yield	747 kips (70% of S.M.Y.S.)
Internal Pressure	8,610 psi (80% of M.I.Y.P.)
External Pressure	100% of Collapse Strength
Max. DLS (deg. /100ft)	40

Recommended Torque

Min.	15,500	ft-lb	21,000	N-m
Opti.	17,200	ft-lb	23,300	N-m
Max.	18,900	ft-lb	25,600	N-m
Operational Max.	23,600	ft-lb	32,000	N-m

Note : Operational Max. torque can be applied for high torque application

eog resources

Never Better 14 Fed Com 723H

1. GEOLOGIC NAME OF SURFACE FORMATION:

Permian

2. ESTIMATED TOPS OF IMPORTANT GEOLOGICAL MARKERS:

Rustler	976'
Tamarisk Anhydrite	1,079'
Top of Salt	1,288'
Base of Salt	4,543'
Lamar	4,855'
Bell Canyon	4,906'
Cherry Canyon	5,790'
Brushy Canyon	6,991'
Bone Spring Lime	8,764'
Leonard Shale	8,918'
1st Bone Spring Sand	9,923'
2nd Bone Spring Shale	10,185'
2nd Bone Spring Sand	10,453'
3rd Bone Spring Carb	10,998'
3rd Bone Spring Sand	11,673'
Wolfcamp	12,019'
TD	12,270'

3. ESTIMATED DEPTHS OF ANTICIPATED FRESH WATER, OIL OR GAS:

Upper Permian Sands	0- 400’	Fresh Water
Bell Canyon	4,906'	Oil
Cherry Canyon	5,790'	Oil
Brushy Canyon	6,991'	Oil
Leonard (Avalon) Shale	8,918'	Oil
1st Bone Spring Sand	9,923'	Oil
2nd Bone Spring Shale	10,185'	Oil
2nd Bone Spring Sand	10,453'	Oil
3rd Bone Spring Carb	10,998'	Oil
3rd Bone Spring Sand	11,673'	Oil
Wolfcamp	12,019'	Oil

No other Formations are expected to give up oil, gas or fresh water in measurable quantities. Surface fresh water sands will be protected by setting 9-5/8" or 10-3/4" casing at 1,100' and circulating cement back to surface.

eog resources

Never Better 14 Fed Com 723H

4. CASING PROGRAM - Design A

Hole Size	Interval MD From (ft)	Interval MD To (ft)	Interval TVD From (ft)	Interval TVD To (ft)	Csg OD	Weight	Grade	Conn
12-1/4"	0	1,100	0	1,100	9-5/8"	36#	J-55	LTC
8-3/4"	0	11,185	0	11,098	7-5/8"	29.7#	ICYP-110	MO FXL
6-3/4"	0	10,685	0	10,600	5-1/2"	20#	P110-EC	DWC/C IS MS
6-3/4"	10,685	11,185	10,600	11,100	5-1/2"	20#	P110-EC	VAM Sprint SF
6-3/4"	11,185	22,566	11,100	12,270	5-1/2"	20#	P110-EC	DWC/C IS MS

Variance is requested to waive the centralizer requirements for the 7-5/8" casing in the 8-3/4" hole size. An expansion additive will be utilized, in the cement slurry, for the entire length of the 8-3/4" hole interval to maximize cement bond and zonal isolation.

Variance is also requested to waive any centralizer requirements for the 5-1/2" casing in the 6-3/4" hole size. An expansion additive will be utilized, in the cement slurry, for the entire length of the 6-3/4" hole interval to maximize cement bond and zonal isolation.

Variance is also requested to waive the annular clearance requirements for the 5-1/2" casing by 7-5/8" casing annulus to the proposed top of cement.

EOG requests permission to allow deviation from the 0.422'' annulus clearance requirement from Onshore Order #2 under the following conditions:

- Annular clearance to meet or exceed 0.422'' between intermediate casing ID and production casing coupling only on the first 500' overlap between both casing strings.
- Annular clearance less than 0.422'' is acceptable for the production open hole section.

Cementing Program:

Depth	No. Sacks	Wt. ppg	Yld Ft3/sk	Slurry Description
1,100' 9-5/8"	310	13.5	1.73	Lead: Class C + 4.0% Bentonite Gel + 0.5% CaCl2 + 0.25 lb/sk Cello-Flake (TOC @ Surface)
	80	14.8	1.34	Tail: Class C + 0.6% FL-62 + 0.25 lb/sk Cello-Flake + 0.2% Sodium Metasilicate (TOC @ 900')
11,098' 7-5/8"	510	14.2	1.11	1st Stage (Tail): Class C + 0.6% Halad-9 + 0.45% HR-601 + 3% Microbond (TOC @ 6,790')
	1160	14.8	1.5	2nd Stage (Bradenhead squeeze): Class C + 3% Salt + 1% PreMag-M + 6% Bentonite Gel (TOC @ surface)
22,566' 5-1/2"	1525	13.2	1.31	Lead: Class H + 0.4% Halad-344 + 0.35% HR-601 + 3% Microbond (TOC @ 10,598')

eog resources

Never Better 14 Fed Com 723H

Additive	Purpose
Bentonite Gel	Lightweight/Lost circulation prevention
Calcium Chloride	Accelerator
Cello-flake	Lost circulation prevention
Sodium Metasilicate	Accelerator
MagOx	Expansive agent
Pre-Mag-M	Expansive agent
Sodium Chloride	Accelerator
FL-62	Fluid loss control
Halad-344	Fluid loss control
Halad-9	Fluid loss control
HR-601	Retarder
Microbond	Expansive Agent

EOG requests variance from minimum standards to pump a two stage cement job on the 7-5/8" intermediate casing string with the first stage being pumped conventionally with the calculated top of cement at the Brushy Canyon (6,991') and the second stage performed as a 1000 sack bradenhead squeeze with planned cement from the Brushy Canyon to surface. If necessary, a top out consisting of 160 sacks of Class C cement + 3% Salt + 1% PreMag-M + 6% Bentonite Gel (2.30 yld, 12.91 ppg) will be executed as a contingency. Top will be verified by Echo-meter.

EOG will include the Echo-meter verified fluid top and the volume of displacement fluid above the cement slurry in the annulus in all post-drill sundries on wells utilizing this cement program.

EOG will report to the BLM the volume of fluid (limited to 5 bbls) used to flush intermediate casing valves following backside cementing procedures.

Cement integrity tests will be performed immediately following plug bump.

Note: Cement volumes based on bit size plus at least 25% excess in the open hole plus 10% excess in the cased-hole overlap section.

5. MINIMUM SPECIFICATIONS FOR PRESSURE CONTROL:

Variance is requested to use a co-flex line between the BOP and choke manifold (instead of using a 4” OD steel line).

The minimum blowout preventer equipment (BOPE) shown in Exhibit #1 will consist of a single ram, mud cross and double ram-type (10,000 psi WP) preventer and an annular preventer (5,000 psi WP). Both units will be hydraulically operated and the ram-type will be equipped with blind rams on bottom and drill pipe rams on top.

EOG will utilize wing unions on BOPE connections that can be isolated from wellbore pressure through means of a choke. All wing unions will be rated to a pressure that meets or exceeds the pressure rating of the BOPE system.

Variance is requested to use a 5,000 psi annular BOP with the 10,000 psi BOP stack.

Pipe rams and blind rams will be operationally checked on each trip out of the hole. These checks will be noted on the daily tour sheets.

A hydraulically operated choke will be installed prior to drilling out of the intermediate casing shoe.

6. TYPES AND CHARACTERISTICS OF THE PROPOSED MUD SYSTEM:

During this procedure we plan to use a Closed-Loop System and haul contents to the required disposal.

The applicable depths and properties of the drilling fluid systems are as follows:

Depth	Type	Weight (ppg)	Viscosity	Water Loss
0 – 1,100'	Fresh - Gel	8.6-8.8	28-34	N/c
1,100' – 11,098'	Brine	10.0-10.2	28-34	N/c
11,098’ – 11,876'	Oil Base	8.7-9.4	58-68	N/c - 6
11,876’ – 22,566’ Lateral	Oil Base	10.0-14.0	58-68	4 - 6

The highest mud weight needed to balance formation is expected to be 11.5 ppg. In order to maintain hole stability, mud weights up to 14.0 ppg may be utilized.

An electronic pit volume totalizer (PVT) will be utilized on the circulating system, to monitor pit volume, flow rate, pump pressure and stroke rate.

Sufficient mud materials to maintain mud properties and meet minimum lost circulation and weight increase requirements will be kept at the wellsite at all times.

7. AUXILIARY WELL CONTROL AND MONITORING EQUIPMENT:

(A) A kelly cock will be kept in the drill string at all times.

(B) A full opening drill pipe-stabbing valve (inside BOP) with proper drill pipe connections will be on the rig floor at all times.

(C) H2S monitoring and detection equipment will be utilized from surface casing point to TD.

eog resources

Never Better 14 Fed Com 723H

8. LOGGING, TESTING AND CORING PROGRAM:

Open-hole logs are not planned for this well.

GR-CCL Will be run in cased hole during completions phase of operations.

9. ABNORMAL CONDITIONS, PRESSURES, TEMPERATURES AND POTENTIAL HAZARDS:

The estimated bottom-hole temperature (BHT) at TD is 193 degrees F with an estimated maximum bottom-hole pressure (BHP) at TD of 8,933 psig and a maximum anticipated surface pressure of 6,233 psig (based on 14.0 ppg MW). No hydrogen sulfide or other hazardous gases or fluids have been encountered, reported or are known to exist at this depth in this area. Severe loss circulation is expected from 6,991' to intermediate casing point.

10. ANTICIPATED STARTING DATE AND DURATION OF OPERATIONS:

The drilling operation should be finished in approximately one month. If the well is productive, an additional 60-90 days will be required for completion and testing before a decision is made to install permanent facilities.

EOG Resources requests the option to contract a Surface Rig to drill, set surface casing, and Cement on the subject well. After WOC 8 hours or 500 psi compressive strength (whichever is greater), the Surface Rig will move off so the wellhead can be installed. A welder will cut the casing to the proper height and weld on the wellhead (both “A” and “B” sections). The weld will be tested to 1,500 psi. All valves will be closed and a wellhead cap will be installed (diagram attached). If the timing between rigs is such that EOG Resources would not be able to preset the surface, the Primary Rig will MIRU and drill the well in its entirety per the APD.

11. WELLHEAD:

A multi-bowl wellhead system will be utilized.

After running the 9-5/8” surface casing, a 9-5/8” BOP/BOPE system with a minimum working pressure of 10,000 psi will be installed on the wellhead system and will be pressure tested to 250 psi low followed by a 10,000 psi pressure test. This pressure test will be repeated at least every 30 days, as per Onshore Order No. 2.

The minimum working pressure of the BOP and related BOPE required for drilling below the surface casing shoe shall be 10,000 psi.

The multi-bowl wellhead will be installed by vendor’s representative(s). A copy of the installation instructions for the Cactus Multi-Bowl WH system has been sent to the NM BLM office in Carlsbad, NM.

eog resources

Never Better 14 Fed Com 723H

The wellhead will be installed by a third party welder while being monitored by WH vendor's representative.

All BOP equipment will be tested utilizing a conventional test plug. Not a cup or J-packer type. EOG Resources reserves the option to conduct BOPE testing during wait on cement periods provided a test plug is utilized.

A solid steel body pack-off will be utilized after running and cementing the intermediate casing. After installation the pack-off and lower flange will be pressure tested to 5,000 psi.

Casing strings will be tested as per Onshore Order No. 2 to at least 0.22 psi/ft or 1,500 psi, whichever is greater.

EOG Resources Inc. (EOG) respectfully requests a variance from the minimum standards for well control equipment testing of Onshore Order No. 2 (item III.A.2.a.i) to allow a testing schedule of the blow out preventer (BOP) and blow out prevention equipment (BOPE) along with Batch Drilling & Offline cement operations to include the following:

- Full BOPE test at first installation on the pad.
- Full BOPE test every 21 days per Onshore Order No. 2.
- Function test BOP elements per Onshore Order No. 2.
- Break testing BOP and BOPE coupled with batch drilling operations and option to offline cement and/or remediate (if needed) any surface or intermediate sections, according to attached offline cementing support documentation.
- After the well section is secured, the BOP will be disconnected from the wellhead and walked with the rig to another well on the pad.
- TA cap will also be installed per Wellhead vendor procedure and pressure inside the casing will be monitored via the valve on the TA cap as per standard batch drilling ops.
- See attached "EOG BLM Variance 3a -Offline Cement Intermediate Operational Procedure"

eog resources

Never Better 14 Fed Com 723H

12. TUBING REQUIREMENTS

EOG respectively requests an exception to the following NMOCD rule:

- 19.15.16.10 Casing AND TUBING RQUIREMENTS:
  J (3): "The operator shall set tubing as near the bottom as practical and tubing perforations shall not be more than 250 feet above top of pay zone."

With horizontal flowing and gas lifted wells an end of tubing depth placed at or slightly above KOP is a conservative way to ensure the tubing stays clean from debris, plugging, and allows for fewer well interventions post offset completion. The deeper the tubulars are run into the curve, the higher the probability is that the tubing will become stuck in sand and or well debris as the well produces over time. An additional consideration for EOT placement during artificial lift installations is avoiding the high dog leg severity and inclinations found in the curve section of the wellbore to help improve reliability and performance. Dog leg severity and inclinations tend not to hamper gas lifted or flowing wells, but they do effect other forms of artificial lift like rod pump or ESP (electric submersible pump). Keeping the EOT above KOP is an industry best practice for those respective forms of artificial lift.

eog resources

Never Better 14 Fed Com 723H

549' FNL
1167' FWL
Section 14
T-22-S, R-32-E

Proposed Wellbore

API: 30-025-*****

KB: 3778'
GL: 3753'

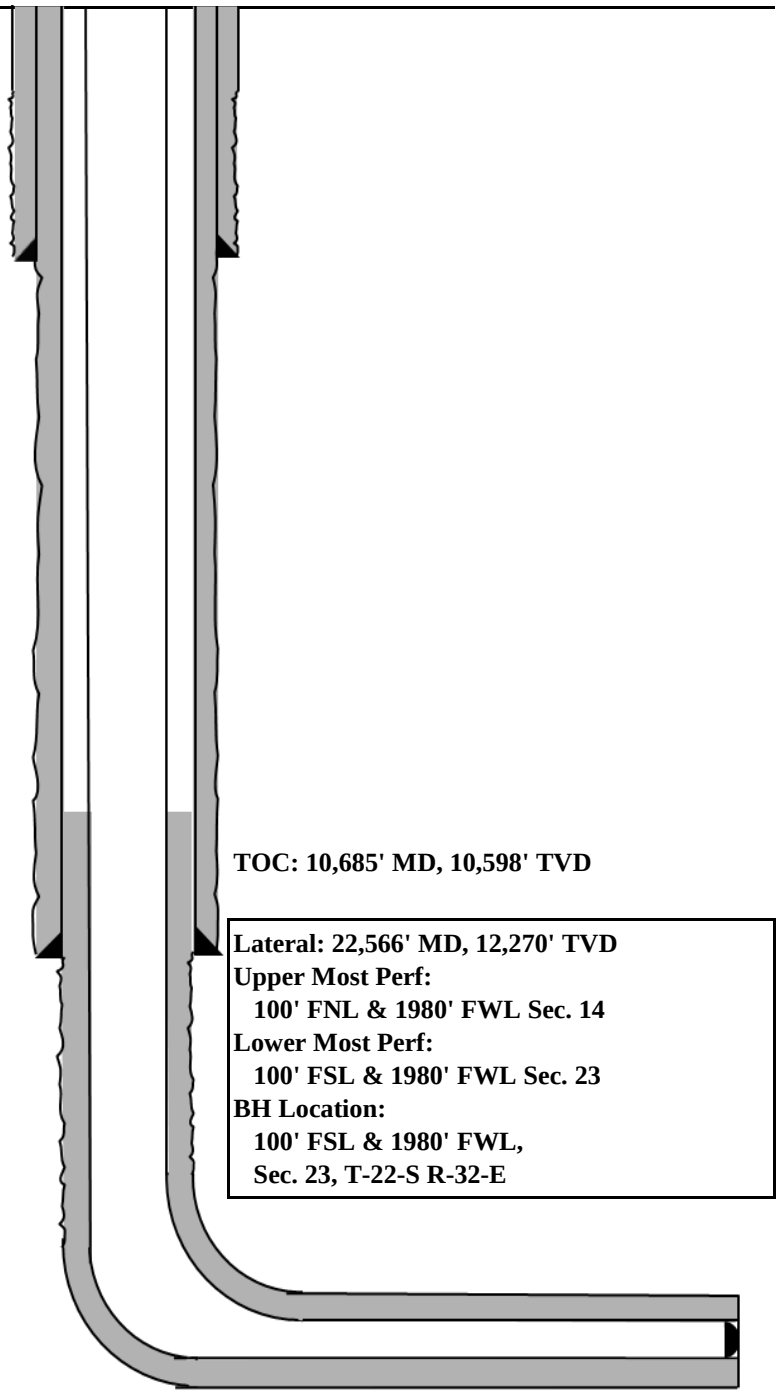

Bit Size: 12-1/4"
9-5/8'', 36#, J-55, LTC
@ 0' - 1,100'

Bit Size: 8-3/4"
7-5/8'', 29.7#, ICYP-110, MO FXL
@ 0' - 11,098'

Bit Size: 6-3/4"
5-1/2'', 20.#, P110-EC, DWC/C IS MS
@ 0' - 10,598'
5-1/2'', 20.#, P110-EC, VAM Sprint SF
@ 10,598' - 11,098'
5-1/2'', 20.#, P110-EC, DWC/C IS MS
@ 11,098' - 22,566'

KOP: 11,876' MD, 11,793' TVD
EOC: 12,626' MD, 12,270' TVD

TOC: 10,685' MD, 10,598' TVD

Lateral: 22,566' MD, 12,270' TVD
Upper Most Perf:
100' FNL & 1980' FWL Sec. 14
Lower Most Perf:
100' FSL & 1980' FWL Sec. 23
BH Location:
100' FSL & 1980' FWL,
Sec. 23, T-22-S R-32-E

eog resources

Never Better 14 Fed Com 723H

Design B

4. CASING PROGRAM

Hole Size	Interval MD From (ft)	Interval MD To (ft)	Interval TVD From (ft)	Interval TVD To (ft)	Csg OD	Weight	Grade	Conn
13"	0	1,100	0	1,100	10-3/4"	40.5#	J-55	STC
9-7/8"	0	11,185	0	11,098	8-3/4"	38.5#	P110-EC	SLIJ II NA
7-7/8"	0	22,566	0	12,270	6"	24.5#	P110-EC	VAM Sprint-SF

Variance is requested to waive the centralizer requirements for the 8-3/4" casing in the 9-7/8" hole size. An expansion additive will be utilized, in the cement slurry, for the entire length of the 9-7/8" hole interval to maximize cement bond and zonal isolation.

Variance is also requested to waive any centralizer requirements for the 6" casing in the 7-7/8" hole size. An expansion additive will be utilized, in the cement slurry, for the entire length of the 7-7/8" hole interval to maximize cement bond and zonal isolation.

Variance is also requested to waive the annular clearance requirements for the 6" casing by 8-3/4" casing annulus to the proposed top of cement.

EOG requests permission to allow deviation from the 0.422'' annulus clearance requirement from Onshore Order #2 under the following conditions:

- Annular clearance to meet or exceed 0.422'' between intermediate casing ID and production casing coupling only on the first 500' overlap between both casing strings.
- Annular clearance less than 0.422'' is acceptable for the production open hole section.

Cementing Program:

Depth	No. Sacks	Wt. ppg	Yld Ft3/sk	Slurry Description
1,100' 10-3/4"	290	13.5	1.73	Lead: Class C + 4.0% Bentonite Gel + 0.5% CaCl2 + 0.25 lb/sk Cello-Flake (TOC @ Surface)
	70	14.8	1.34	Tail: Class C + 0.6% FL-62 + 0.25 lb/sk Cello-Flake + 0.2% Sodium Metasilicate (TOC @ 900')
11,098' 8-3/4"	570	14.2	1.11	1st Stage (Tail): Class C + 0.6% Halad-9 + 0.45% HR-601 + 3% Microbond (TOC @ 6,790')
	1320	14.8	1.5	2nd Stage (Bradenhead squeeze): Class C + 3% Salt + 1% PreMag-M + 6% Bentonite Gel (TOC @ surface)
22,566' 6"	1670	13.2	1.31	Lead: Class H + 0.4% Halad-344 + 0.35% HR-601 + 3% Microbond (TOC @ 10,598')

Never Better 14 Fed Com 723H

EOG requests variance from minimum standards to pump a two stage cement job on the 8-3/4" intermediate casing string with the first stage being pumped conventionally with the calculated top of cement at the Brushy Canyon (6,991') and the second stage performed as a 1000 sack bradenhead squeeze with planned cement from the Brushy Canyon to surface. If necessary, a top out consisting of 320 sacks of Class C cement + 3% Salt + 1% PreMag-M + 6% Bentonite Gel (2.30 yld, 12.91 ppg) will be executed as a contingency. Top will be verified by Echo-meter.

EOG will include the Echo-meter verified fluid top and the volume of displacement fluid above the cement slurry in the annulus in all post-drill sundries on wells utilizing this cement program.

EOG will report to the BLM the volume of fluid (limited to 5 bbls) used to flush intermediate casing valves following backside cementing procedures.

Cement integrity tests will be performed immediately following plug bump.

Note: Cement volumes based on bit size plus at least 25% excess in the open hole plus 10% excess in the cased-hole overlap section.

Wellhead:

EOG Resources Inc. (EOG) respectfully requests a variance from the minimum standards for well control equipment testing of Onshore Order No. 2 (item III.A.2.a.i) to allow a testing schedule of the blow out preventer (BOP) and blow out prevention equipment (BOPE) along with Batch Drilling & Offline cement operations to include the following:

- Full BOPE test at first installation on the pad.
- Full BOPE test every 20 days per Onshore Order No. 2.
- Function test BOP elements per Onshore Order No. 2.
- Break testing BOP and BOPE coupled with batch drilling operations and option to offline cement and/or remediate (if needed) any surface or intermediate sections, according to attached offline cementing support documentation.
- After the well section is secured, the BOP will be disconnected from the wellhead and walked with the rig to another well on the pad.
- TA cap will also be installed per Wellhead vendor procedure and pressure inside the casing will be monitored via the valve on the TA cap as per standard batch drilling ops.
- See attached "EOG BLM Variance 3a -Offline Cement Intermediate Operational Procedure"

eog resources

Never Better 14 Fed Com 723H

549' FNL
1167' FWL
Section 14
T-22-S, R-32-E

Proposed Wellbore

KB: 3778'
GL: 3753'

API: 30-025-***

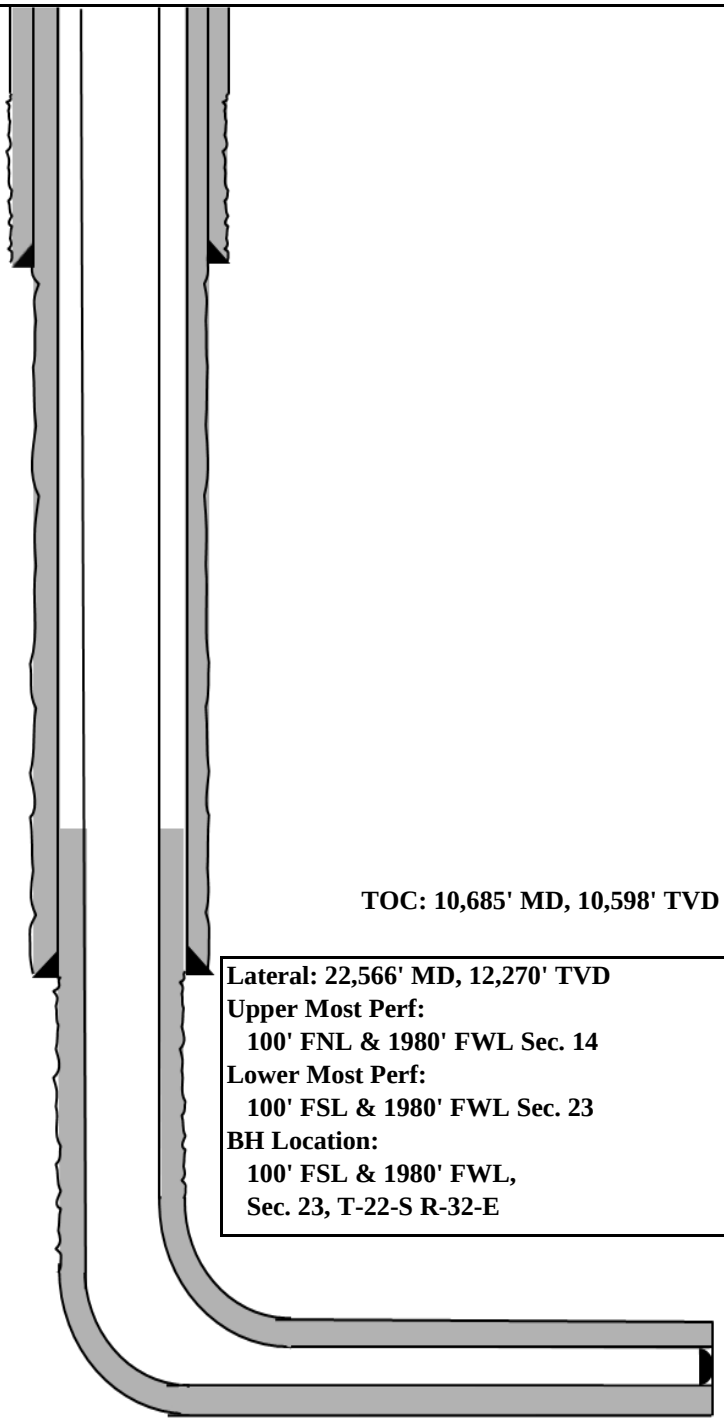

Bit Size: 13"
10-3/4'', 40.5#, J-55, STC,
0' - 1,100'

Bit Size: 9-7/8"
7-5/8'', 29.7#, ICYP-110, MO FXL
@ 0' - 11,098'

Bit Size: 7-7/8"
6'', 24.5#, P110-EC, VAM Sprint-SF,
@ 0' - 22,566'

TOC: 10,685' MD, 10,598' TVD

Lateral: 22,566' MD, 12,270' TVD
Upper Most Perf:
100' FNL & 1980' FWL Sec. 14
Lower Most Perf:
100' FSL & 1980' FWL Sec. 23
BH Location:
100' FSL & 1980' FWL,
Sec. 23, T-22-S R-32-E

KOP: 11,876' MD, 11,793' TVD
EOC: 12,626' MD, 12,270' TVD

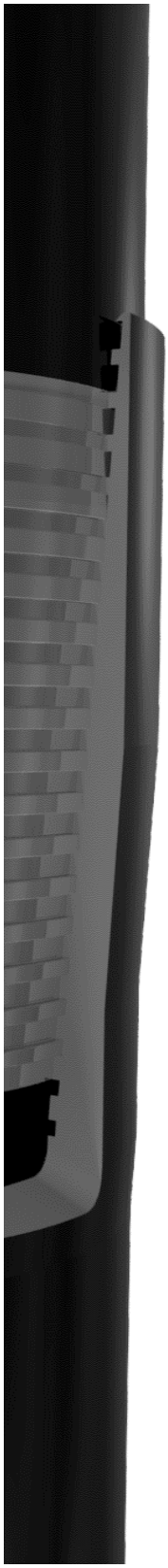

Issued on: 10 Feb. 2021 by Wesley Ott

VAM® SPRINT-SF
Connection Data Sheet

OD	Weight (lb/ft)	Wall Th.	Grade	API Drift:	Connection
6 in.	Nominal: 24.50 Plain End: 23.95	0.400 in.	P110EC	5.075 in.	VAM® SPRINT-SF

PIPE PROPERTIES		
Nominal OD	6.000	in.
Nominal ID	5.200	in.
Nominal Cross Section Area	7.037	sqin.
Grade Type	High Yield	
Min. Yield Strength	125	ksi
Max. Yield Strength	140	ksi
Min. Ultimate Tensile Strength	135	ksi

CONNECTION PROPERTIES		
Connection Type	Integral Semi-Flush	
Connection OD (nom):	6.277	in.
Connection ID (nom):	5.146	in.
Make-Up Loss	5.386	in.
Critical Cross Section	6.417	sqin.
Tension Efficiency	91.0	% of pipe
Compression Efficiency	91.0	% of pipe
Internal Pressure Efficiency	100	% of pipe
External Pressure Efficiency	100	% of pipe

CONNECTION PERFORMANCES		
Tensile Yield Strength	801	klb
Compression Resistance	801	klb
Internal Yield Pressure	14,580	psi
Collapse Resistance	12,500	psi
Max. Structural Bending	83	°/100ft
Max. Bending with ISO/API Sealability	30	°/100ft

* 87.5% RBW

TORQUE VALUES		
Min. Make-up torque	21,750	ft.lb
Opt. Make-up torque	24,250	ft.lb
Max. Make-up torque	26,750	ft.lb
Max. Torque with Sealability (MTS)	53,000	ft.lb

VAM® SPRINT-SF is a semi-flush connection innovatively designed for extreme shale applications. Its high tension rating and ultra high torque capacity make it ideal to run a fill string length as production casing in shale wells with extended horizontal sections and tight clearance requirements.

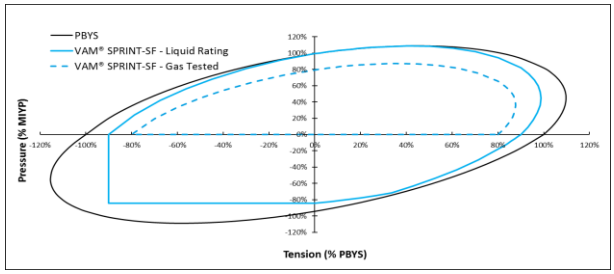

Do you need help on this product? - Remember no one knows VAM® like VAM®

canada@vamfieldservice.com
usa@vamfieldservice.com
mexico@vamfieldservice.com
brazil@vamfieldservice.com
uk@vamfieldservice.com
dubai@vamfieldservice.com
nigeria@vamfieldservice.com
angola@vamfieldservice.com
china@vamfieldservice.com
baku@vamfieldservice.com
singapore@vamfieldservice.com
australia@vamfieldservice.com

Over 140 VAM® Specialists available worldwide 24/7 for Rig Site Assistance

eog resources

Never Better 14 Fed Com #723H

Hydrogen Sulfide Plan Summary

A. All personnel shall receive proper H2S training in accordance with Onshore Order III.C.3.a.

B. Briefing Area: two perpendicular areas will be designated by signs and readily accessible.

C. Required Emergency Equipment:

- **Well control equipment**
  a. Flare line 150' from wellhead to be ignited by flare gun.
  b. Choke manifold with a remotely operated choke.
  c. Mud/gas separator
- **Protective equipment for essential personnel:**
  a. Breathing Apparatus:
    i. Rescue Packs (SCBA) — 1 unit shall be placed at each breathing area, 2 shall be stored in the safety trailer.
    ii. Work/Escape packs —4 packs shall be stored on the rig floor with sufficient air hose not to restrict work activity.
    iii. Emergency Escape Packs —4 packs shall be stored in the doghouse for emergency evacuation.
  b. Auxiliary Rescue Equipment:
    i. Stretcher
    ii. Two OSHA full body harness
    iii. 100 ft 5/8 inch OSHA approved rope
    iv. 1-20# class ABC fire extinguisher

- **H2S Detection and Monitoring Equipment:**
  The stationary detector with three sensors will be placed in the upper dog house if equipped, set to visually alarm @ 10 ppm and audible @ 14 ppm. Calibrate a minimum of every 30 days or as needed. The sensors will be placed in the following places: Rig floor / Bell nipple / End of flow line or where well bore fluid is being discharged. (Gas sample tubes will be stored in the safety trailer)

- **Visual Warning System:**
  a. One color code condition sign will be placed at the entrance to the site reflecting the possible conditions at the site.
  b. A colored condition flag will be on display, reflecting the current condition at the site at the time.
  c. Two wind socks will be placed in strategic locations, visible from all angles.

Never Better 14 Fed Com #723H

- **Mud Program:**
  The mud program has been designed to minimize the volume of H2S circulated to surface. The operator will have the necessary mud products to minimize hazards while drilling in H2S bearing zones.

- **Metallurgy:**
  All drill strings, casings, tubing, wellhead, blowout preventer, drilling spool, kill lines, choke manifold and lines, and valves shall be suitable for H2S service.

- **Communication:**
  Communication will be via cell phones and land lines where available.

eog resources

Never Better 14 Fed Com #723H

Emergency Assistance Telephone List

PUBLIC SAFETY:	911 or
Lea County Sheriff's Department	(575) 396-3611
Corey Helton	
Fire Department	
Carlsbad	(575) 885-3125
Artesia	(575) 746-5050
Hospitals	
Carlsbad	(575) 887-4121
Artesia	(575) 748-3333
Hobbs	(575) 392-1979
Dept. of Public Safety/Carlsbad	(575) 748-9718
Highway Department	(575) 885-3281
U.S. Department of Labor	(575) 887-1174
Bureau of Land Management - Hobbs (Lea Co)	(575) 393-3612
PET On Call - Hobbs	(575) 706-2779
Bureau of Land Management - Carlsbad (Eddy Co)	(575) 234-5972
PET On Call - Carlsbad	(575) 706-2779
New Mexico Oil Conservation Division - Artesia	(575) 748-1283
Inspection Group South - Gilbert Gordero	(575) 626-0830
EOG Resources, Inc.	
EOG Midland	(432) 686-3600
Company Drilling Consultants:	
Jett Dueitt	(432) 230-4840
Blake Burney	
Drilling Engineers	
Stephen Davis	(432) 235-9789
Matt Day	(210) 296-4456
Drilling Managers	
Branden Keener	(210) 294-3729
Drilling Superintendents	
Lance Hardy	(432) 215-8152
Ryan Reynolds	(432) 215-5978
Steve Kelly	(210) 416-7894
H&P Drilling	
H&P Drilling	(432) 563-5757
Nabors Drilling	
Nabors Drilling	(432) 363-8180
Patterson UTI	
Patterson UTI	(432) 561-9382
EOG Safety	
Brian Chandler (HSE Manager)	(817) 239-0251

Midland

Lea County, NM (NAD 83 NME)
Never Better 14 Fed Com
#723H

OH

Plan: Plan #0.1 RT

Standard Planning Report

02 April, 2024

Planning Report

Database:	PEDMB	**Local Co-ordinate Reference:**	Well #723H
Company:	Midland	**TVD Reference:**	kb = 26' @ 3779.0usft
Project:	Lea County, NM (NAD 83 NME)	**MD Reference:**	kb = 26' @ 3779.0usft
Site:	Never Better 14 Fed Com	**North Reference:**	Grid
Well:	#723H	**Survey Calculation Method:**	Minimum Curvature
Wellbore:	OH		
Design:	Plan #0.1 RT		

Project Lea County, NM (NAD 83 NME)

Map System:	US State Plane 1983	**System Datum:**	Mean Sea Level
Geo Datum:	North American Datum 1983		
Map Zone:	New Mexico Eastern Zone		

Site Never Better 14 Fed Com

Site Position:		**Northing:**	508,809.00 usft	**Latitude:**	32° 23' 49.009 N
From:	Map	**Easting:**	751,376.00 usft	**Longitude:**	103° 39' 10.161 W
Position Uncertainty:	0.0 usft	**Slot Radius:**	13-3/16 "		

Well #723H

Well Position	**+N/-S**	0.0 usft	**Northing:**	509,023.00 usft	**Latitude:**	32° 23' 51.076 N
	+E/-W	0.0 usft	**Easting:**	752,175.00 usft	**Longitude:**	103° 39' 0.826 W
Position Uncertainty		0.0 usft	**Wellhead Elevation:**	usft	**Ground Level:**	3,753.0 usft
Grid Convergence:		0.37 °				

Wellbore OH

Magnetics	Model Name	Sample Date	Declination (°)	Dip Angle (°)	Field Strength (nT)
	IGRF2020	4/2/2024	6.27	59.95	47,294.35809150

Design Plan #0.1 RT

Audit Notes:

Version:		**Phase:**	PLAN	**Tie On Depth:**	0.0

Vertical Section:	Depth From (TVD) (usft)	+N/-S (usft)	+E/-W (usft)	Direction (°)
	0.0	0.0	0.0	174.93

Plan Survey Tool Program **Date** 4/2/2024

	Depth From (usft)	Depth To (usft)	Survey (Wellbore)	Tool Name	Remarks
1	0.0	22,565.6	Plan #0.1 RT (OH)	EOG MWD+IFR1	
				MWD + IFR1	

Planning Report

Database:	PEDMB	**Local Co-ordinate Reference:**	Well #723H
Company:	Midland	**TVD Reference:**	kb = 26' @ 3779.0usft
Project:	Lea County, NM (NAD 83 NME)	**MD Reference:**	kb = 26' @ 3779.0usft
Site:	Never Better 14 Fed Com	**North Reference:**	Grid
Well:	#723H	**Survey Calculation Method:**	Minimum Curvature
Wellbore:	OH		
Design:	Plan #0.1 RT		

Plan Sections

Measured Depth (usft)	Inclination (°)	Azimuth (°)	Vertical Depth (usft)	+N/-S (usft)	+E/-W (usft)	Dogleg Rate (°/100usft)	Build Rate (°/100usft)	Turn Rate (°/100usft)	TFO (°)	Target
0.0	0.00	0.00	0.0	0.0	0.0	0.00	0.00	0.00	0.00	
1,200.0	0.00	0.00	1,200.0	0.0	0.0	0.00	0.00	0.00	0.00	
1,714.2	10.28	57.80	1,711.4	24.5	38.9	2.00	2.00	0.00	57.80	
6,560.2	10.28	57.80	6,479.6	485.5	771.1	0.00	0.00	0.00	0.00	
7,074.4	0.00	0.01	6,991.0	510.0	810.0	2.00	-2.00	0.00	180.00	
11,875.9	0.00	0.01	11,792.5	510.0	810.0	0.00	0.00	0.00	0.00	KOP(Never Better 14
12,096.3	26.46	180.00	12,005.2	460.0	810.0	12.00	12.00	81.65	180.00	FTP(Never Better 14
12,625.8	90.00	179.60	12,269.9	32.6	812.1	12.00	12.00	-0.08	-0.45	
14,743.4	90.00	179.60	12,270.0	-2,085.0	827.0	0.00	0.00	0.00	0.00	Fed Perf 1(Never Bet
17,383.5	90.00	179.67	12,270.0	-4,725.0	844.0	0.00	0.00	0.00	87.56	Fed Perf 2(Never Bet
22,565.6	90.00	179.56	12,270.0	-9,907.0	879.0	0.00	0.00	0.00	-91.61	PBHL(Never Better 14

Planning Report

Database:	PEDMB	**Local Co-ordinate Reference:**	Well #723H
Company:	Midland	**TVD Reference:**	kb = 26' @ 3779.0usft
Project:	Lea County, NM (NAD 83 NME)	**MD Reference:**	kb = 26' @ 3779.0usft
Site:	Never Better 14 Fed Com	**North Reference:**	Grid
Well:	#723H	**Survey Calculation Method:**	Minimum Curvature
Wellbore:	OH		
Design:	Plan #0.1 RT		

Planned Survey

Measured Depth (usft)	Inclination (°)	Azimuth (°)	Vertical Depth (usft)	+N/-S (usft)	+E/-W (usft)	Vertical Section (usft)	Dogleg Rate (°/100usft)	Build Rate (°/100usft)	Turn Rate (°/100usft)
0.0	0.00	0.00	0.0	0.0	0.0	0.0	0.00	0.00	0.00
100.0	0.00	0.00	100.0	0.0	0.0	0.0	0.00	0.00	0.00
200.0	0.00	0.00	200.0	0.0	0.0	0.0	0.00	0.00	0.00
300.0	0.00	0.00	300.0	0.0	0.0	0.0	0.00	0.00	0.00
400.0	0.00	0.00	400.0	0.0	0.0	0.0	0.00	0.00	0.00
500.0	0.00	0.00	500.0	0.0	0.0	0.0	0.00	0.00	0.00
600.0	0.00	0.00	600.0	0.0	0.0	0.0	0.00	0.00	0.00
700.0	0.00	0.00	700.0	0.0	0.0	0.0	0.00	0.00	0.00
800.0	0.00	0.00	800.0	0.0	0.0	0.0	0.00	0.00	0.00
900.0	0.00	0.00	900.0	0.0	0.0	0.0	0.00	0.00	0.00
1,000.0	0.00	0.00	1,000.0	0.0	0.0	0.0	0.00	0.00	0.00
1,100.0	0.00	0.00	1,100.0	0.0	0.0	0.0	0.00	0.00	0.00
1,200.0	0.00	0.00	1,200.0	0.0	0.0	0.0	0.00	0.00	0.00
1,300.0	2.00	57.80	1,300.0	0.9	1.5	-0.8	2.00	2.00	0.00
1,400.0	4.00	57.80	1,399.8	3.7	5.9	-3.2	2.00	2.00	0.00
1,500.0	6.00	57.80	1,499.5	8.4	13.3	-7.2	2.00	2.00	0.00
1,600.0	8.00	57.80	1,598.7	14.9	23.6	-12.7	2.00	2.00	0.00
1,700.0	10.00	57.80	1,697.5	23.2	36.8	-19.8	2.00	2.00	0.00
1,714.2	10.28	57.80	1,711.4	24.5	38.9	-21.0	2.00	2.00	0.00
1,800.0	10.28	57.80	1,795.9	32.7	51.9	-28.0	0.00	0.00	0.00
1,900.0	10.28	57.80	1,894.3	42.2	67.0	-36.1	0.00	0.00	0.00
2,000.0	10.28	57.80	1,992.7	51.7	82.1	-44.2	0.00	0.00	0.00
2,100.0	10.28	57.80	2,091.0	61.2	97.2	-52.4	0.00	0.00	0.00
2,200.0	10.28	57.80	2,189.4	70.7	112.3	-60.5	0.00	0.00	0.00
2,300.0	10.28	57.80	2,287.8	80.2	127.4	-68.7	0.00	0.00	0.00
2,400.0	10.28	57.80	2,386.2	89.8	142.6	-76.8	0.00	0.00	0.00
2,500.0	10.28	57.80	2,484.6	99.3	157.7	-84.9	0.00	0.00	0.00
2,600.0	10.28	57.80	2,583.0	108.8	172.8	-93.1	0.00	0.00	0.00
2,700.0	10.28	57.80	2,681.4	118.3	187.9	-101.2	0.00	0.00	0.00
2,800.0	10.28	57.80	2,779.8	127.8	203.0	-109.4	0.00	0.00	0.00
2,900.0	10.28	57.80	2,878.2	137.3	218.1	-117.5	0.00	0.00	0.00
3,000.0	10.28	57.80	2,976.6	146.8	233.2	-125.6	0.00	0.00	0.00
3,100.0	10.28	57.80	3,075.0	156.3	248.3	-133.8	0.00	0.00	0.00
3,200.0	10.28	57.80	3,173.4	165.9	263.4	-141.9	0.00	0.00	0.00
3,300.0	10.28	57.80	3,271.8	175.4	278.5	-150.1	0.00	0.00	0.00
3,400.0	10.28	57.80	3,370.2	184.9	293.6	-158.2	0.00	0.00	0.00
3,500.0	10.28	57.80	3,468.6	194.4	308.7	-166.3	0.00	0.00	0.00
3,600.0	10.28	57.80	3,566.9	203.9	323.8	-174.5	0.00	0.00	0.00
3,700.0	10.28	57.80	3,665.3	213.4	339.0	-182.6	0.00	0.00	0.00
3,800.0	10.28	57.80	3,763.7	222.9	354.1	-190.8	0.00	0.00	0.00
3,900.0	10.28	57.80	3,862.1	232.4	369.2	-198.9	0.00	0.00	0.00
4,000.0	10.28	57.80	3,960.5	242.0	384.3	-207.0	0.00	0.00	0.00
4,100.0	10.28	57.80	4,058.9	251.5	399.4	-215.2	0.00	0.00	0.00
4,200.0	10.28	57.80	4,157.3	261.0	414.5	-223.3	0.00	0.00	0.00
4,300.0	10.28	57.80	4,255.7	270.5	429.6	-231.5	0.00	0.00	0.00
4,400.0	10.28	57.80	4,354.1	280.0	444.7	-239.6	0.00	0.00	0.00
4,500.0	10.28	57.80	4,452.5	289.5	459.8	-247.7	0.00	0.00	0.00
4,600.0	10.28	57.80	4,550.9	299.0	474.9	-255.9	0.00	0.00	0.00
4,700.0	10.28	57.80	4,649.3	308.5	490.0	-264.0	0.00	0.00	0.00
4,800.0	10.28	57.80	4,747.7	318.0	505.1	-272.2	0.00	0.00	0.00
4,900.0	10.28	57.80	4,846.1	327.6	520.2	-280.3	0.00	0.00	0.00
5,000.0	10.28	57.80	4,944.5	337.1	535.4	-288.4	0.00	0.00	0.00
5,100.0	10.28	57.80	5,042.9	346.6	550.5	-296.6	0.00	0.00	0.00
5,200.0	10.28	57.80	5,141.2	356.1	565.6	-304.7	0.00	0.00	0.00

Planning Report

Database:	PEDMB	**Local Co-ordinate Reference:**	Well #723H
Company:	Midland	**TVD Reference:**	kb = 26' @ 3779.0usft
Project:	Lea County, NM (NAD 83 NME)	**MD Reference:**	kb = 26' @ 3779.0usft
Site:	Never Better 14 Fed Com	**North Reference:**	Grid
Well:	#723H	**Survey Calculation Method:**	Minimum Curvature
Wellbore:	OH		
Design:	Plan #0.1 RT		

Planned Survey

Measured Depth (usft)	Inclination (°)	Azimuth (°)	Vertical Depth (usft)	+N/-S (usft)	+E/-W (usft)	Vertical Section (usft)	Dogleg Rate (°/100usft)	Build Rate (°/100usft)	Turn Rate (°/100usft)
5,300.0	10.28	57.80	5,239.6	365.6	580.7	-312.9	0.00	0.00	0.00
5,400.0	10.28	57.80	5,338.0	375.1	595.8	-321.0	0.00	0.00	0.00
5,500.0	10.28	57.80	5,436.4	384.6	610.9	-329.1	0.00	0.00	0.00
5,600.0	10.28	57.80	5,534.8	394.1	626.0	-337.3	0.00	0.00	0.00
5,700.0	10.28	57.80	5,633.2	403.7	641.1	-345.4	0.00	0.00	0.00
5,800.0	10.28	57.80	5,731.6	413.2	656.2	-353.6	0.00	0.00	0.00
5,900.0	10.28	57.80	5,830.0	422.7	671.3	-361.7	0.00	0.00	0.00
6,000.0	10.28	57.80	5,928.4	432.2	686.4	-369.8	0.00	0.00	0.00
6,100.0	10.28	57.80	6,026.8	441.7	701.5	-378.0	0.00	0.00	0.00
6,200.0	10.28	57.80	6,125.2	451.2	716.6	-386.1	0.00	0.00	0.00
6,300.0	10.28	57.80	6,223.6	460.7	731.7	-394.3	0.00	0.00	0.00
6,400.0	10.28	57.80	6,322.0	470.2	746.9	-402.4	0.00	0.00	0.00
6,500.0	10.28	57.80	6,420.4	479.8	762.0	-410.5	0.00	0.00	0.00
6,560.2	10.28	57.80	6,479.6	485.5	771.1	-415.4	0.00	0.00	0.00
6,600.0	9.49	57.80	6,518.8	489.1	776.8	-418.6	2.00	-2.00	0.00
6,700.0	7.49	57.80	6,617.7	497.0	789.3	-425.3	2.00	-2.00	0.00
6,800.0	5.49	57.80	6,717.1	503.0	798.9	-430.4	2.00	-2.00	0.00
6,900.0	3.49	57.80	6,816.7	507.2	805.5	-434.0	2.00	-2.00	0.00
7,000.0	1.49	57.80	6,916.6	509.5	809.2	-436.0	2.00	-2.00	0.00
7,074.4	0.00	0.01	6,991.0	510.0	810.0	-436.4	2.00	-2.00	0.00
7,100.0	0.00	0.00	7,016.6	510.0	810.0	-436.4	0.00	0.00	0.00
7,200.0	0.00	0.00	7,116.6	510.0	810.0	-436.4	0.00	0.00	0.00
7,300.0	0.00	0.00	7,216.6	510.0	810.0	-436.4	0.00	0.00	0.00
7,400.0	0.00	0.00	7,316.6	510.0	810.0	-436.4	0.00	0.00	0.00
7,500.0	0.00	0.00	7,416.6	510.0	810.0	-436.4	0.00	0.00	0.00
7,600.0	0.00	0.00	7,516.6	510.0	810.0	-436.4	0.00	0.00	0.00
7,700.0	0.00	0.00	7,616.6	510.0	810.0	-436.4	0.00	0.00	0.00
7,800.0	0.00	0.00	7,716.6	510.0	810.0	-436.4	0.00	0.00	0.00
7,900.0	0.00	0.00	7,816.6	510.0	810.0	-436.4	0.00	0.00	0.00
8,000.0	0.00	0.00	7,916.6	510.0	810.0	-436.4	0.00	0.00	0.00
8,100.0	0.00	0.00	8,016.6	510.0	810.0	-436.4	0.00	0.00	0.00
8,200.0	0.00	0.00	8,116.6	510.0	810.0	-436.4	0.00	0.00	0.00
8,300.0	0.00	0.00	8,216.6	510.0	810.0	-436.4	0.00	0.00	0.00
8,400.0	0.00	0.00	8,316.6	510.0	810.0	-436.4	0.00	0.00	0.00
8,500.0	0.00	0.00	8,416.6	510.0	810.0	-436.4	0.00	0.00	0.00
8,600.0	0.00	0.00	8,516.6	510.0	810.0	-436.4	0.00	0.00	0.00
8,700.0	0.00	0.00	8,616.6	510.0	810.0	-436.4	0.00	0.00	0.00
8,800.0	0.00	0.00	8,716.6	510.0	810.0	-436.4	0.00	0.00	0.00
8,900.0	0.00	0.00	8,816.6	510.0	810.0	-436.4	0.00	0.00	0.00
9,000.0	0.00	0.00	8,916.6	510.0	810.0	-436.4	0.00	0.00	0.00
9,100.0	0.00	0.00	9,016.6	510.0	810.0	-436.4	0.00	0.00	0.00
9,200.0	0.00	0.00	9,116.6	510.0	810.0	-436.4	0.00	0.00	0.00
9,300.0	0.00	0.00	9,216.6	510.0	810.0	-436.4	0.00	0.00	0.00
9,400.0	0.00	0.00	9,316.6	510.0	810.0	-436.4	0.00	0.00	0.00
9,500.0	0.00	0.00	9,416.6	510.0	810.0	-436.4	0.00	0.00	0.00
9,600.0	0.00	0.00	9,516.6	510.0	810.0	-436.4	0.00	0.00	0.00
9,700.0	0.00	0.00	9,616.6	510.0	810.0	-436.4	0.00	0.00	0.00
9,800.0	0.00	0.00	9,716.6	510.0	810.0	-436.4	0.00	0.00	0.00
9,900.0	0.00	0.00	9,816.6	510.0	810.0	-436.4	0.00	0.00	0.00
10,000.0	0.00	0.00	9,916.6	510.0	810.0	-436.4	0.00	0.00	0.00
10,100.0	0.00	0.00	10,016.6	510.0	810.0	-436.4	0.00	0.00	0.00
10,200.0	0.00	0.00	10,116.6	510.0	810.0	-436.4	0.00	0.00	0.00
10,300.0	0.00	0.00	10,216.6	510.0	810.0	-436.4	0.00	0.00	0.00
10,400.0	0.00	0.00	10,316.6	510.0	810.0	-436.4	0.00	0.00	0.00

Planning Report

Database:	PEDMB	**Local Co-ordinate Reference:**	Well #723H
Company:	Midland	**TVD Reference:**	kb = 26' @ 3779.0usft
Project:	Lea County, NM (NAD 83 NME)	**MD Reference:**	kb = 26' @ 3779.0usft
Site:	Never Better 14 Fed Com	**North Reference:**	Grid
Well:	#723H	**Survey Calculation Method:**	Minimum Curvature
Wellbore:	OH		
Design:	Plan #0.1 RT		

Planned Survey

Measured Depth (usft)	Inclination (°)	Azimuth (°)	Vertical Depth (usft)	+N/-S (usft)	+E/-W (usft)	Vertical Section (usft)	Dogleg Rate (°/100usft)	Build Rate (°/100usft)	Turn Rate (°/100usft)
10,500.0	0.00	0.00	10,416.6	510.0	810.0	-436.4	0.00	0.00	0.00
10,600.0	0.00	0.00	10,516.6	510.0	810.0	-436.4	0.00	0.00	0.00
10,700.0	0.00	0.00	10,616.6	510.0	810.0	-436.4	0.00	0.00	0.00
10,800.0	0.00	0.00	10,716.6	510.0	810.0	-436.4	0.00	0.00	0.00
10,900.0	0.00	0.00	10,816.6	510.0	810.0	-436.4	0.00	0.00	0.00
11,000.0	0.00	0.00	10,916.6	510.0	810.0	-436.4	0.00	0.00	0.00
11,100.0	0.00	0.00	11,016.6	510.0	810.0	-436.4	0.00	0.00	0.00
11,200.0	0.00	0.00	11,116.6	510.0	810.0	-436.4	0.00	0.00	0.00
11,300.0	0.00	0.00	11,216.6	510.0	810.0	-436.4	0.00	0.00	0.00
11,400.0	0.00	0.00	11,316.6	510.0	810.0	-436.4	0.00	0.00	0.00
11,500.0	0.00	0.00	11,416.6	510.0	810.0	-436.4	0.00	0.00	0.00
11,600.0	0.00	0.00	11,516.6	510.0	810.0	-436.4	0.00	0.00	0.00
11,700.0	0.00	0.00	11,616.6	510.0	810.0	-436.4	0.00	0.00	0.00
11,800.0	0.00	0.00	11,716.6	510.0	810.0	-436.4	0.00	0.00	0.00
11,875.9	0.00	0.01	11,792.5	510.0	810.0	-436.4	0.00	0.00	0.00
11,900.0	2.90	180.00	11,816.6	509.4	810.0	-435.8	12.00	12.00	0.00
11,925.0	5.90	180.00	11,841.5	507.5	810.0	-433.9	12.00	12.00	0.00
11,950.0	8.90	180.00	11,866.3	504.3	810.0	-430.7	12.00	12.00	0.00
11,975.0	11.90	180.00	11,890.9	499.7	810.0	-426.2	12.00	12.00	0.00
12,000.0	14.90	180.00	11,915.2	494.0	810.0	-420.4	12.00	12.00	0.00
12,025.0	17.90	180.00	11,939.2	486.9	810.0	-413.4	12.00	12.00	0.00
12,050.0	20.90	180.00	11,962.8	478.6	810.0	-405.1	12.00	12.00	0.00
12,075.0	23.90	180.00	11,985.9	469.1	810.0	-395.6	12.00	12.00	0.00
12,096.3	26.46	180.00	12,005.2	460.0	810.0	-386.6	12.00	12.00	0.00
12,100.0	26.90	179.99	12,008.5	458.3	810.0	-385.0	12.00	12.00	-0.21
12,125.0	29.90	179.95	12,030.5	446.5	810.0	-373.1	12.00	12.00	-0.19
12,150.0	32.90	179.91	12,051.8	433.4	810.0	-360.1	12.00	12.00	-0.16
12,175.0	35.90	179.87	12,072.4	419.3	810.1	-346.1	12.00	12.00	-0.13
12,200.0	38.90	179.85	12,092.3	404.1	810.1	-331.0	12.00	12.00	-0.11
12,225.0	41.90	179.82	12,111.3	387.9	810.1	-314.8	12.00	12.00	-0.10
12,250.0	44.90	179.80	12,129.5	370.8	810.2	-297.7	12.00	12.00	-0.09
12,275.0	47.90	179.78	12,146.7	352.7	810.3	-279.7	12.00	12.00	-0.08
12,300.0	50.90	179.76	12,163.0	333.7	810.3	-260.8	12.00	12.00	-0.07
12,325.0	53.90	179.74	12,178.3	313.9	810.4	-241.0	12.00	12.00	-0.07
12,350.0	56.90	179.73	12,192.5	293.3	810.5	-220.5	12.00	12.00	-0.06
12,375.0	59.90	179.71	12,205.6	272.0	810.6	-199.3	12.00	12.00	-0.06
12,400.0	62.90	179.70	12,217.5	250.1	810.7	-177.4	12.00	12.00	-0.05
12,425.0	65.90	179.69	12,228.3	227.5	810.9	-155.0	12.00	12.00	-0.05
12,450.0	68.90	179.67	12,237.9	204.4	811.0	-132.0	12.00	12.00	-0.05
12,475.0	71.90	179.66	12,246.3	180.9	811.1	-108.5	12.00	12.00	-0.05
12,500.0	74.90	179.65	12,253.5	156.9	811.3	-84.6	12.00	12.00	-0.05
12,525.0	77.90	179.64	12,259.3	132.6	811.4	-60.4	12.00	12.00	-0.04
12,550.0	80.90	179.63	12,263.9	108.1	811.6	-35.9	12.00	12.00	-0.04
12,575.0	83.90	179.62	12,267.2	83.3	811.7	-11.2	12.00	12.00	-0.04
12,600.0	86.90	179.61	12,269.2	58.4	811.9	13.6	12.00	12.00	-0.04
12,625.8	90.00	179.60	12,269.9	32.6	812.1	39.3	12.00	12.00	-0.04
12,700.0	90.00	179.60	12,269.9	-41.6	812.6	113.3	0.00	0.00	0.00
12,800.0	90.00	179.60	12,269.9	-141.6	813.3	212.9	0.00	0.00	0.00
12,900.0	90.00	179.60	12,270.0	-241.6	814.0	312.6	0.00	0.00	0.00
13,000.0	90.00	179.60	12,270.0	-341.6	814.7	412.3	0.00	0.00	0.00
13,100.0	90.00	179.60	12,270.0	-441.6	815.4	511.9	0.00	0.00	0.00
13,200.0	90.00	179.60	12,270.0	-541.6	816.1	611.6	0.00	0.00	0.00
13,300.0	90.00	179.60	12,270.0	-641.6	816.8	711.3	0.00	0.00	0.00
13,400.0	90.00	179.60	12,270.0	-741.6	817.5	810.9	0.00	0.00	0.00

Planning Report

Database:	PEDMB	**Local Co-ordinate Reference:**	Well #723H
Company:	Midland	**TVD Reference:**	kb = 26' @ 3779.0usft
Project:	Lea County, NM (NAD 83 NME)	**MD Reference:**	kb = 26' @ 3779.0usft
Site:	Never Better 14 Fed Com	**North Reference:**	Grid
Well:	#723H	**Survey Calculation Method:**	Minimum Curvature
Wellbore:	OH		
Design:	Plan #0.1 RT		

Planned Survey

Measured Depth (usft)	Inclination (°)	Azimuth (°)	Vertical Depth (usft)	+N/-S (usft)	+E/-W (usft)	Vertical Section (usft)	Dogleg Rate (°/100usft)	Build Rate (°/100usft)	Turn Rate (°/100usft)
13,500.0	90.00	179.60	12,270.0	-841.6	818.2	910.6	0.00	0.00	0.00
13,600.0	90.00	179.60	12,270.0	-941.6	818.9	1,010.3	0.00	0.00	0.00
13,700.0	90.00	179.60	12,270.0	-1,041.6	819.6	1,109.9	0.00	0.00	0.00
13,800.0	90.00	179.60	12,270.0	-1,141.6	820.4	1,209.6	0.00	0.00	0.00
13,900.0	90.00	179.60	12,270.0	-1,241.6	821.1	1,309.3	0.00	0.00	0.00
14,000.0	90.00	179.60	12,270.0	-1,341.6	821.8	1,409.0	0.00	0.00	0.00
14,100.0	90.00	179.60	12,270.0	-1,441.6	822.5	1,508.6	0.00	0.00	0.00
14,200.0	90.00	179.60	12,270.0	-1,541.6	823.2	1,608.3	0.00	0.00	0.00
14,300.0	90.00	179.60	12,270.0	-1,641.6	823.9	1,708.0	0.00	0.00	0.00
14,400.0	90.00	179.60	12,270.0	-1,741.6	824.6	1,807.6	0.00	0.00	0.00
14,500.0	90.00	179.60	12,270.0	-1,841.6	825.3	1,907.3	0.00	0.00	0.00
14,600.0	90.00	179.60	12,270.0	-1,941.6	826.0	2,007.0	0.00	0.00	0.00
14,700.0	90.00	179.60	12,270.0	-2,041.6	826.7	2,106.6	0.00	0.00	0.00
14,743.4	90.00	179.60	12,270.0	-2,085.0	827.0	2,149.9	0.00	0.00	0.00
14,800.0	90.00	179.60	12,270.0	-2,141.6	827.4	2,206.3	0.00	0.00	0.00
14,900.0	90.00	179.60	12,270.0	-2,241.6	828.1	2,306.0	0.00	0.00	0.00
15,000.0	90.00	179.60	12,270.0	-2,341.6	828.8	2,405.6	0.00	0.00	0.00
15,100.0	90.00	179.61	12,270.0	-2,441.6	829.5	2,505.3	0.00	0.00	0.00
15,200.0	90.00	179.61	12,270.0	-2,541.5	830.2	2,605.0	0.00	0.00	0.00
15,300.0	90.00	179.61	12,270.0	-2,641.5	830.8	2,704.6	0.00	0.00	0.00
15,400.0	90.00	179.61	12,270.0	-2,741.5	831.5	2,804.3	0.00	0.00	0.00
15,500.0	90.00	179.62	12,270.0	-2,841.5	832.2	2,904.0	0.00	0.00	0.00
15,600.0	90.00	179.62	12,270.0	-2,941.5	832.9	3,003.6	0.00	0.00	0.00
15,700.0	90.00	179.62	12,270.0	-3,041.5	833.5	3,103.3	0.00	0.00	0.00
15,800.0	90.00	179.62	12,270.0	-3,141.5	834.2	3,203.0	0.00	0.00	0.00
15,900.0	90.00	179.63	12,270.0	-3,241.5	834.8	3,302.6	0.00	0.00	0.00
16,000.0	90.00	179.63	12,270.0	-3,341.5	835.5	3,402.3	0.00	0.00	0.00
16,100.0	90.00	179.63	12,270.0	-3,441.5	836.1	3,502.0	0.00	0.00	0.00
16,200.0	90.00	179.63	12,270.0	-3,541.5	836.8	3,601.6	0.00	0.00	0.00
16,300.0	90.00	179.64	12,270.0	-3,641.5	837.4	3,701.3	0.00	0.00	0.00
16,400.0	90.00	179.64	12,270.0	-3,741.5	838.0	3,800.9	0.00	0.00	0.00
16,500.0	90.00	179.64	12,270.0	-3,841.5	838.7	3,900.6	0.00	0.00	0.00
16,600.0	90.00	179.65	12,270.0	-3,941.5	839.3	4,000.3	0.00	0.00	0.00
16,700.0	90.00	179.65	12,270.0	-4,041.5	839.9	4,099.9	0.00	0.00	0.00
16,800.0	90.00	179.65	12,270.0	-4,141.5	840.5	4,199.6	0.00	0.00	0.00
16,900.0	90.00	179.65	12,270.0	-4,241.5	841.1	4,299.3	0.00	0.00	0.00
17,000.0	90.00	179.66	12,270.0	-4,341.5	841.7	4,398.9	0.00	0.00	0.00
17,100.0	90.00	179.66	12,270.0	-4,441.5	842.3	4,498.6	0.00	0.00	0.00
17,200.0	90.00	179.66	12,270.0	-4,541.5	842.9	4,598.2	0.00	0.00	0.00
17,300.0	90.00	179.66	12,270.0	-4,641.5	843.5	4,697.9	0.00	0.00	0.00
17,383.5	90.00	179.67	12,270.0	-4,725.0	844.0	4,781.1	0.00	0.00	0.00
17,400.0	90.00	179.67	12,270.0	-4,741.5	844.1	4,797.6	0.00	0.00	0.00
17,500.0	90.00	179.66	12,270.0	-4,841.5	844.7	4,897.2	0.00	0.00	0.00
17,600.0	90.00	179.66	12,270.0	-4,941.5	845.3	4,996.9	0.00	0.00	0.00
17,700.0	90.00	179.66	12,270.0	-5,041.5	845.9	5,096.5	0.00	0.00	0.00
17,800.0	90.00	179.66	12,270.0	-5,141.5	846.5	5,196.2	0.00	0.00	0.00
17,900.0	90.00	179.66	12,270.0	-5,241.5	847.1	5,295.8	0.00	0.00	0.00
18,000.0	90.00	179.65	12,270.0	-5,341.5	847.7	5,395.5	0.00	0.00	0.00
18,100.0	90.00	179.65	12,270.0	-5,441.5	848.3	5,495.2	0.00	0.00	0.00
18,200.0	90.00	179.65	12,270.0	-5,541.5	848.9	5,594.8	0.00	0.00	0.00
18,300.0	90.00	179.65	12,270.0	-5,641.5	849.5	5,694.5	0.00	0.00	0.00
18,400.0	90.00	179.65	12,270.0	-5,741.5	850.1	5,794.2	0.00	0.00	0.00
18,500.0	90.00	179.64	12,270.0	-5,841.5	850.7	5,893.8	0.00	0.00	0.00
18,600.0	90.00	179.64	12,270.0	-5,941.5	851.4	5,993.5	0.00	0.00	0.00

Planning Report

Database:	PEDMB	**Local Co-ordinate Reference:**	Well #723H
Company:	Midland	**TVD Reference:**	kb = 26' @ 3779.0usft
Project:	Lea County, NM (NAD 83 NME)	**MD Reference:**	kb = 26' @ 3779.0usft
Site:	Never Better 14 Fed Com	**North Reference:**	Grid
Well:	#723H	**Survey Calculation Method:**	Minimum Curvature
Wellbore:	OH		
Design:	Plan #0.1 RT		

Planned Survey

Measured Depth (usft)	Inclination (°)	Azimuth (°)	Vertical Depth (usft)	+N/-S (usft)	+E/-W (usft)	Vertical Section (usft)	Dogleg Rate (°/100usft)	Build Rate (°/100usft)	Turn Rate (°/100usft)
18,700.0	90.00	179.64	12,270.0	-6,041.5	852.0	6,093.1	0.00	0.00	0.00
18,800.0	90.00	179.64	12,270.0	-6,141.5	852.6	6,192.8	0.00	0.00	0.00
18,900.0	90.00	179.63	12,270.0	-6,241.5	853.3	6,292.5	0.00	0.00	0.00
19,000.0	90.00	179.63	12,270.0	-6,341.5	853.9	6,392.1	0.00	0.00	0.00
19,100.0	90.00	179.63	12,270.0	-6,441.5	854.5	6,491.8	0.00	0.00	0.00
19,200.0	90.00	179.63	12,270.0	-6,541.5	855.2	6,591.5	0.00	0.00	0.00
19,300.0	90.00	179.63	12,270.0	-6,641.5	855.8	6,691.1	0.00	0.00	0.00
19,400.0	90.00	179.62	12,270.0	-6,741.5	856.5	6,790.8	0.00	0.00	0.00
19,500.0	90.00	179.62	12,270.0	-6,841.5	857.1	6,890.4	0.00	0.00	0.00
19,600.0	90.00	179.62	12,270.0	-6,941.5	857.8	6,990.1	0.00	0.00	0.00
19,700.0	90.00	179.62	12,270.0	-7,041.5	858.5	7,089.8	0.00	0.00	0.00
19,800.0	90.00	179.62	12,270.0	-7,141.5	859.1	7,189.4	0.00	0.00	0.00
19,900.0	90.00	179.61	12,270.0	-7,241.5	859.8	7,289.1	0.00	0.00	0.00
20,000.0	90.00	179.61	12,270.0	-7,341.5	860.5	7,388.8	0.00	0.00	0.00
20,100.0	90.00	179.61	12,270.0	-7,441.5	861.2	7,488.4	0.00	0.00	0.00
20,200.0	90.00	179.61	12,270.0	-7,541.4	861.8	7,588.1	0.00	0.00	0.00
20,300.0	90.00	179.61	12,270.0	-7,641.4	862.5	7,687.8	0.00	0.00	0.00
20,400.0	90.00	179.60	12,270.0	-7,741.4	863.2	7,787.4	0.00	0.00	0.00
20,500.0	90.00	179.60	12,270.0	-7,841.4	863.9	7,887.1	0.00	0.00	0.00
20,600.0	90.00	179.60	12,270.0	-7,941.4	864.6	7,986.8	0.00	0.00	0.00
20,700.0	90.00	179.60	12,270.0	-8,041.4	865.3	8,086.4	0.00	0.00	0.00
20,800.0	90.00	179.60	12,270.0	-8,141.4	866.0	8,186.1	0.00	0.00	0.00
20,900.0	90.00	179.59	12,270.0	-8,241.4	866.7	8,285.8	0.00	0.00	0.00
21,000.0	90.00	179.59	12,270.0	-8,341.4	867.4	8,385.4	0.00	0.00	0.00
21,100.0	90.00	179.59	12,270.0	-8,441.4	868.1	8,485.1	0.00	0.00	0.00
21,200.0	90.00	179.59	12,270.0	-8,541.4	868.9	8,584.8	0.00	0.00	0.00
21,300.0	90.00	179.59	12,270.0	-8,641.4	869.6	8,684.5	0.00	0.00	0.00
21,400.0	90.00	179.58	12,270.0	-8,741.4	870.3	8,784.1	0.00	0.00	0.00
21,500.0	90.00	179.58	12,270.0	-8,841.4	871.0	8,883.8	0.00	0.00	0.00
21,600.0	90.00	179.58	12,270.0	-8,941.4	871.8	8,983.5	0.00	0.00	0.00
21,700.0	90.00	179.58	12,270.0	-9,041.4	872.5	9,083.1	0.00	0.00	0.00
21,800.0	90.00	179.58	12,270.0	-9,141.4	873.2	9,182.8	0.00	0.00	0.00
21,900.0	90.00	179.57	12,270.0	-9,241.4	874.0	9,282.5	0.00	0.00	0.00
22,000.0	90.00	179.57	12,270.0	-9,341.4	874.7	9,382.2	0.00	0.00	0.00
22,100.0	90.00	179.57	12,270.0	-9,441.4	875.5	9,481.8	0.00	0.00	0.00
22,200.0	90.00	179.57	12,270.0	-9,541.4	876.2	9,581.5	0.00	0.00	0.00
22,300.0	90.00	179.57	12,270.0	-9,641.4	877.0	9,681.2	0.00	0.00	0.00
22,400.0	90.00	179.56	12,270.0	-9,741.4	877.7	9,780.8	0.00	0.00	0.00
22,500.0	90.00	179.56	12,270.0	-9,841.4	878.5	9,880.5	0.00	0.00	0.00
22,565.6	90.00	179.56	12,270.0	-9,907.0	879.0	9,945.9	0.00	0.00	0.00

Planning Report

Database:	PEDMB	**Local Co-ordinate Reference:**	Well #723H
Company:	Midland	**TVD Reference:**	kb = 26' @ 3779.0usft
Project:	Lea County, NM (NAD 83 NME)	**MD Reference:**	kb = 26' @ 3779.0usft
Site:	Never Better 14 Fed Com	**North Reference:**	Grid
Well:	#723H	**Survey Calculation Method:**	Minimum Curvature
Wellbore:	OH		
Design:	Plan #0.1 RT		

Design Targets

Target Name - hit/miss target - Shape	Dip Angle (°)	Dip Dir. (°)	TVD (usft)	+N/-S (usft)	+E/-W (usft)	Northing (usft)	Easting (usft)	Latitude	Longitude
KOP(Never Better 14 Fe - plan hits target center - Point	0.00	0.01	11,792.5	510.0	810.0	509,533.00	752,985.00	32° 23' 56.071 N	103° 38' 51.341 W
FTP(Never Better 14 Fe - plan hits target center - Point	0.00	0.01	12,005.2	460.0	810.0	509,483.00	752,985.00	32° 23' 55.577 N	103° 38' 51.344 W
Fed Perf 1(Never Better - plan hits target center - Point	0.00	0.00	12,270.0	-2,085.0	827.0	506,938.00	753,002.00	32° 23' 30.392 N	103° 38' 51.337 W
PBHL(Never Better 14 F - plan hits target center - Point	0.00	0.00	12,270.0	-9,907.0	879.0	499,116.00	753,054.00	32° 22' 12.990 N	103° 38' 51.315 W
Fed Perf 2(Never Better - plan hits target center - Point	0.00	0.01	12,270.0	-4,725.0	844.0	504,298.00	753,019.00	32° 23' 4.268 N	103° 38' 51.336 W

eog resources

Lea County, NM (NAD 83 NME)

Never Better 14 Fed Com #723H

Plan #0.1 RT

Azimuths to Grid North
True North: -0.37°
Magnetic North: 5.90°

Magnetic Field
Strength: 47294.4nT
Dip Angle: 59.95°
Date: 4/2/2024
Model: IGRF2020

To convert a Magnetic Direction to a Grid Direction, Add 5.90°
To convert a Magnetic Direction to a True Direction, Add 6.27° East
To convert a True Direction to a Grid Direction, Subtract 0.37°

PROJECT DETAILS: Lea County, NM (NAD 83 NME)

Geodetic System:	US State Plane 1983
Datum:	North American Datum 1983
Ellipsoid:	GRS 1980
Zone:	New Mexico Eastern Zone
System Datum:	Mean Sea Level

WELL DETAILS: #723H

3753.0
kb = 26' @ 3779.0usft

Northing	Easting	Latitude	Longitude
509023.00	752175.00	32° 23' 51.076 N	103° 39' 0.826 W

SECTION DETAILS

Sec	MD	Inc	Azi	TVD	+N/-S	+E/-W	Dleg	TFace	VSect	Target
1	0.0	0.00	0.00	0.0	0.0	0.0	0.00	0.00	0.0	
2	1200.0	0.00	0.00	1200.0	0.0	0.0	0.00	0.00	0.0	
3	1714.2	10.28	57.80	1711.4	24.5	38.9	2.00	57.80	-21.0	
4	6560.2	10.28	57.80	6479.6	485.5	771.1	0.00	0.00	-415.4	
5	7074.4	0.00	0.00	6991.0	510.0	810.0	2.00	180.00	-436.4	
6	11875.9	0.00	0.00	11792.5	510.0	810.0	0.00	0.00	-436.4	KOP(Never Better 14 Fed Com #723H)
7	12096.3	26.46	180.00	12005.2	460.0	810.0	12.00	180.00	-386.6	FTP(Never Better 14 Fed Com #723H)
8	12625.8	90.00	179.60	12269.9	32.6	812.1	12.00	-0.45	39.3	
9	14743.4	90.00	179.60	12270.0	-2085.0	827.0	0.00	0.00	2149.9	Fed Perf 1(Never Better 14 Fed Com #723H)
10	17383.5	90.00	179.67	12270.0	-4725.0	844.0	0.00	87.56	4781.1	Fed Perf 2(Never Better 14 Fed Com #723H)
11	22565.6	90.00	179.56	12270.0	-9907.0	879.0	0.00	-91.61	9945.9	PBHL(Never Better 14 Fed Com #723H)

CASING DETAILS

No casing data is available

WELLBORE TARGET DETAILS (MAP CO-ORDINATES)

Name	TVD	+N/-S	+E/-W	Northing	Easting
KOP(Never Better 14 Fed Com #723H)	11792.5	510.0	810.0	509533.00	752985.00
FTP(Never Better 14 Fed Com #723H)	12005.2	460.0	810.0	509483.00	752985.00
Fed Perf 1(Never Better 14 Fed Com #723H)	12270.0	-2085.0	827.0	506938.00	753002.00
Fed Perf 2(Never Better 14 Fed Com #723H)	12270.0	-4725.0	844.0	504298.00	753019.00
PBHL(Never Better 14 Fed Com #723H)	12270.0	-9907.0	879.0	499116.00	753054.00

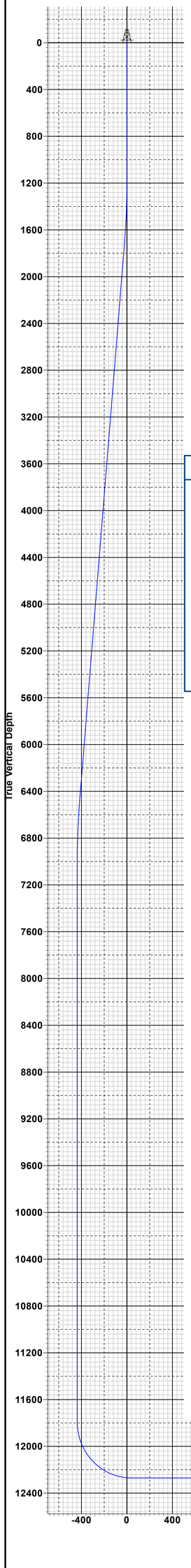

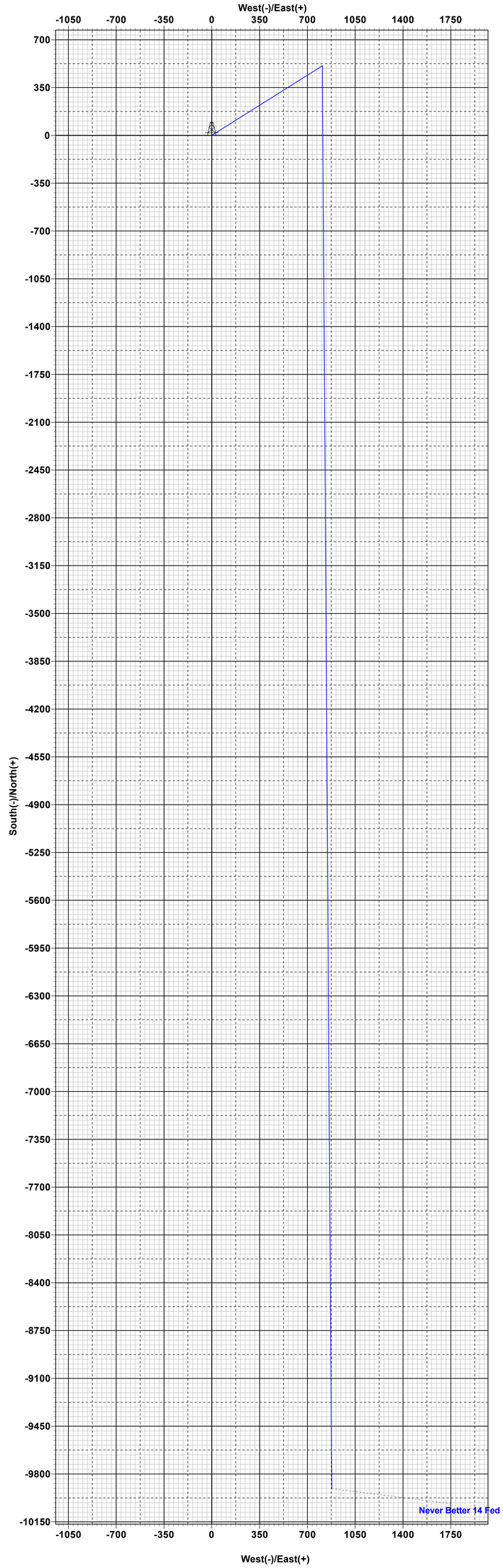

Lea County, NM (NAD 83 NME)
Never Better 14 Fed Com
#723H
OH
Plan #0.1 RT
16:07, April 02 2024

Received by OCD: 10/28/2026 2:09:08 PM

Pipe Body and API Connections Performance Data

10.750 40.50/0.350 J55

PDF

New Search »

« Back to Previous List

USC Metric

6/8/2015 10:14:05 AM

Mechanical Properties	Pipe	BTC	LTC	STC	
Minimum Yield Strength	55,000	--	--	--	psi
Maximum Yield Strength	80,000	--	--	--	psi
Minimum Tensile Strength	75,000	--	--	--	psi
Dimensions	**Pipe**	**BTC**	**LTC**	**STC**	
Outside Diameter	10.750	11.750	--	11.750	in.
Wall Thickness	0.350	--	--	--	in.
Inside Diameter	10.050	10.050	--	10.050	in.
Standard Drift	9.894	9.894	--	9.894	in.
Alternate Drift	--	--	--	--	in.
Nominal Linear Weight, T&C	40.50	--	--	--	lbs/ft
Plain End Weight	38.91	--	--	--	lbs/ft
Performance	**Pipe**	**BTC**	**LTC**	**STC**	
Minimum Collapse Pressure	1,580	1,580	--	1,580	psi
Minimum Internal Yield Pressure	3,130	3,130	--	3,130	psi
Minimum Pipe Body Yield Strength	629.00	--	--	--	1000 lbs
Joint Strength	--	700	--	420	1000 lbs
Reference Length	--	11,522	--	6,915	ft
Make-Up Data	**Pipe**	**BTC**	**LTC**	**STC**	
Make-Up Loss	--	4.81	--	3.50	in.
Minimum Make-Up Torque	--	--	--	3,150	ft-lbs
Maximum Make-Up Torque	--	--	--	5,250	ft-lbs

Released to Imaging: 11/13/2026 9:51:12 AM

Exhibit 1
EOG Resources
11” 10M PSI BOP Stack

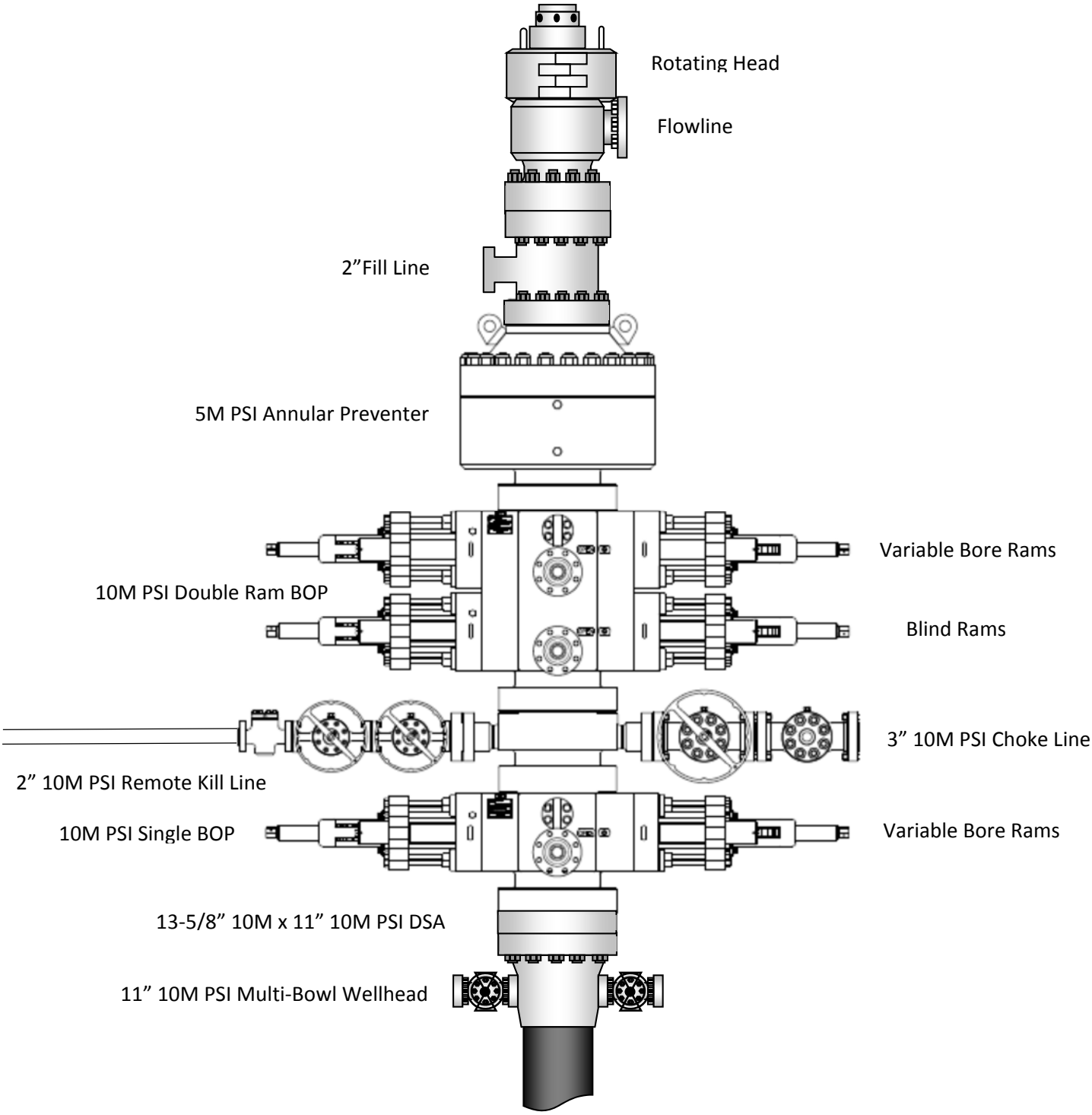

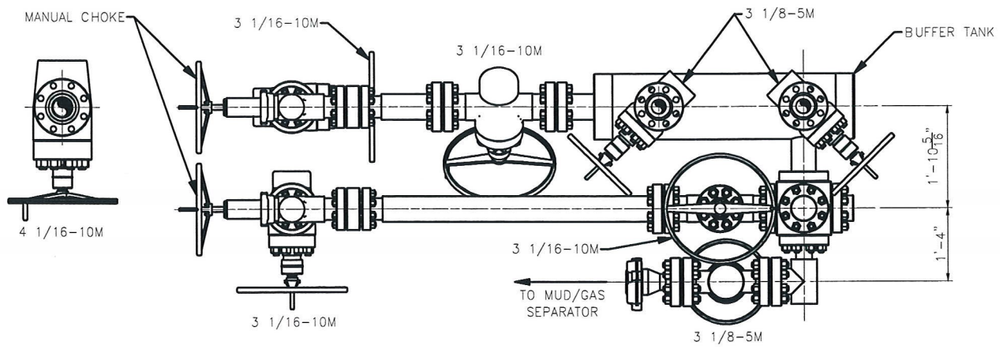

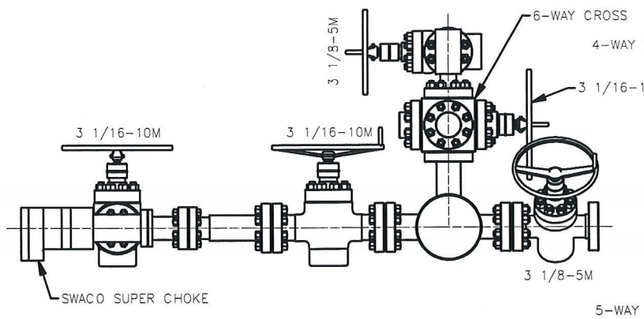

VIEW A-A

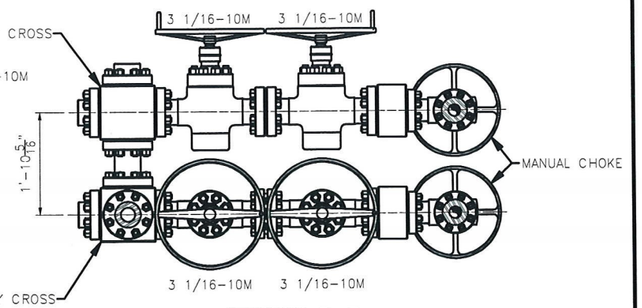

SECTION B-B

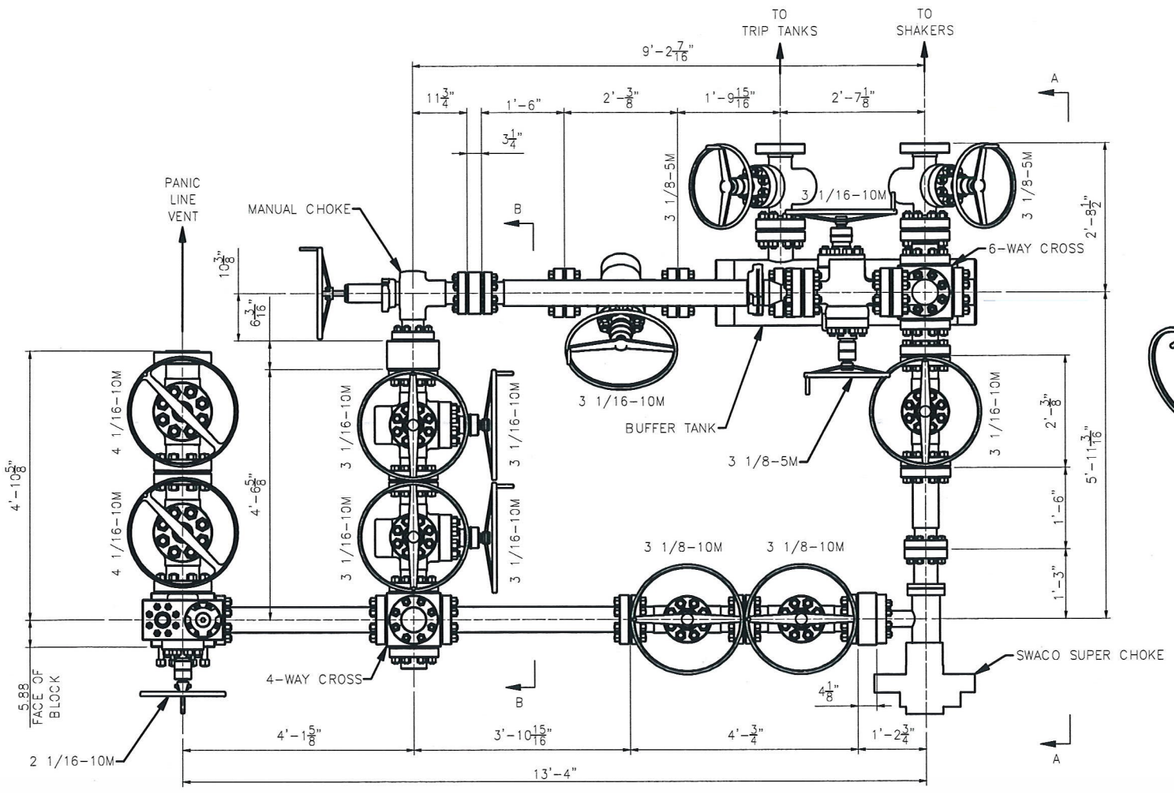

PLAN VIEW

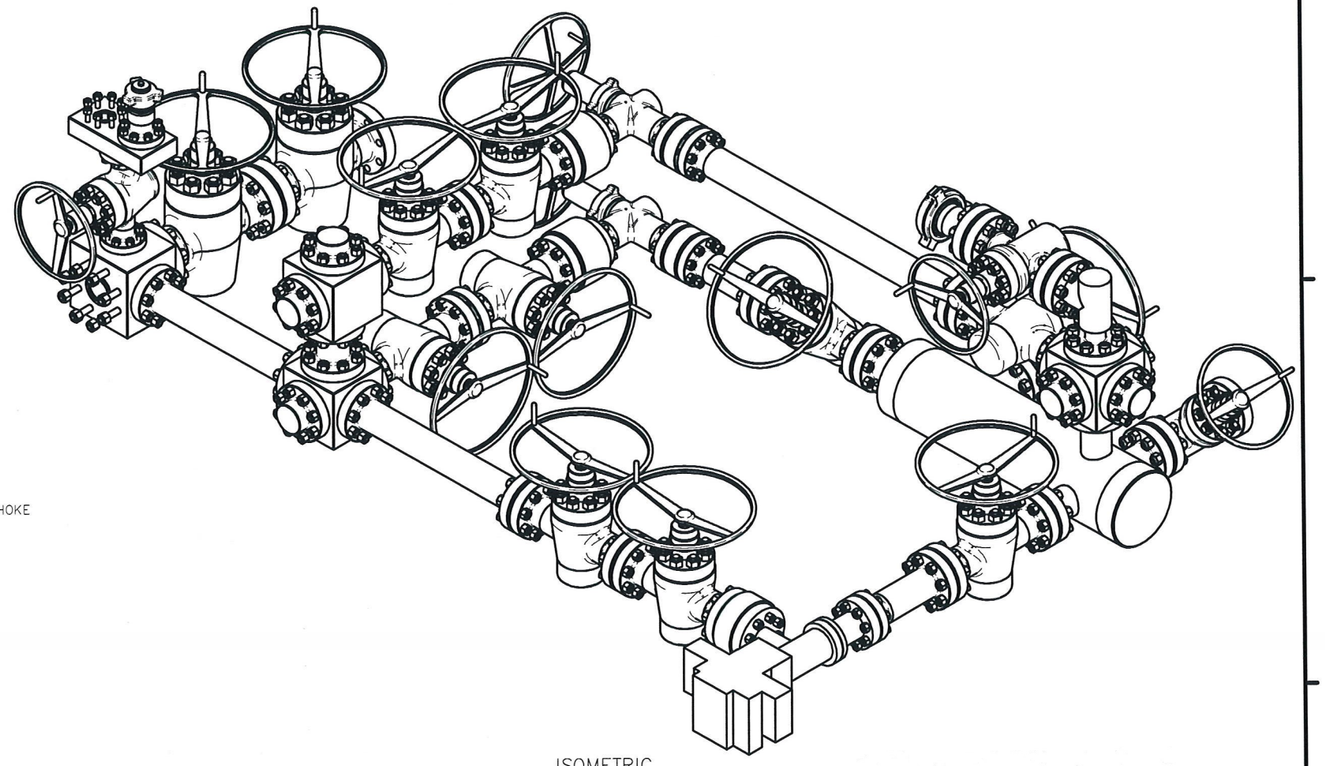

ISOMETRIC

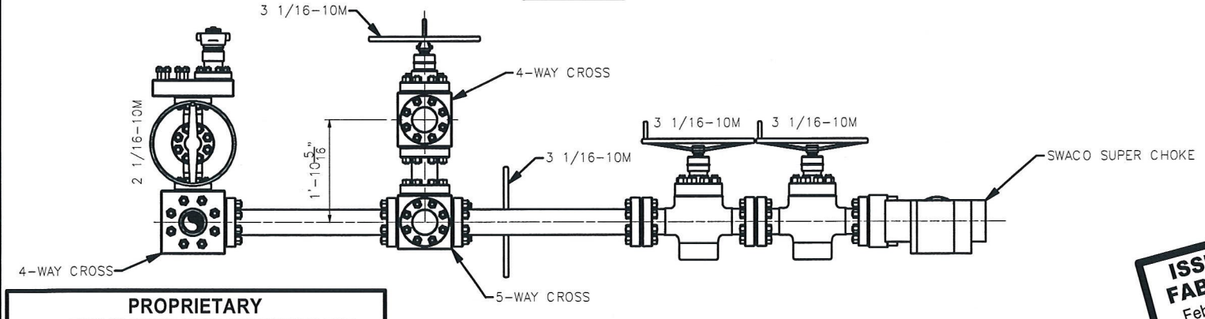

PROPRIETARY

THIS DRAWING AND THE IDEAS AND INFORMATION INCLUDED IN THIS DRAWING ARE PROPRIETARY AND ARE NOT TO BE REPRODUCED, DISTRIBUTED OR DISCLOSED IN ANY MANNER,WITHOUT THE PRIOR, WRITTEN CONSENT OF A DULY AUTHORIZED OFFICER OF HELMERICH & PAYNE INT'L DRILLING CO.

ISSUED FOR FABRICATION
February-10-2014
DRAFTSMAN MWL
ENGINEER

STANDARD TOLERANCES
(UNLESS NOTED)

1. FABRICATION DIMENSIONS:	A-0° TO 24"	±1/16"
	B-24° TO 120°	±1/8"
	C-OVER 120°	±1/4"
2. MACHINED DIMENSIONS:	A-ANGULAR	±.30'
	B-LINEAR (EXPRESSED AS FRACTION)	±.015
	LINEAR (EXPRESSED TO ONE DECIMAL)	±.1
	LINEAR (EXPRESSED TO TWO DECIMALS)	±.015
	LINEAR (EXPRESSED TO THREE DECIMALS)	±.005

REV	DATE	DESCRIPTION	BY
—			

HELMERICH & PAYNE INTERNATIONAL DRILLING CO.

TITLE: 3 CHOKE, 3 LEVEL, 10M CHOKE MANIFOLD G.A.

CUSTOMER: H&P

PROJECT:

DRAWN:	DATE:	DWG. NO.:	REV:
MWL	2/10/2014	HP-D1254	—
SCALE: 3/4"=1'-0"	SHEET: 1 OF 1		

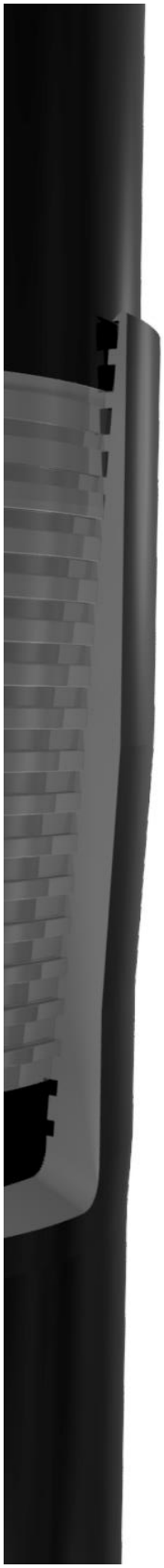

Issued on: 08 Jul. 2020 by Wesley Ott

VAM® SPRINT-SF
Connection Data Sheet

OD	Weight	Wall Th.	Grade	API Drift:	Connection
5 1/2 in.	20.00 lb/ft	0.361 in.	P110EC	4.653 in.	VAM® SPRINT-SF

PIPE PROPERTIES		
Nominal OD	5.500	in.
Nominal ID	4.778	in.
Nominal Cross Section Area	5.828	sqin.
Grade Type	High Yield	
Min. Yield Strength	125	ksi
Max. Yield Strength	140	ksi
Min. Ultimate Tensile Strength	135	ksi

CONNECTION PROPERTIES		
Connection Type	Semi-Premium Integral Semi-Flush	
Connection OD (nom):	5.783	in.
Connection ID (nom):	4.717	in.
Make-Up Loss	5.965	in.
Critical Cross Section	5.244	sqin.
Tension Efficiency	90.0	% of pipe
Compression Efficiency	90.0	% of pipe
Internal Pressure Efficiency	100	% of pipe
External Pressure Efficiency	100	% of pipe

CONNECTION PERFORMANCES		
Tensile Yield Strength	656	klb
Compression Resistance	656	klb
Internal Yield Pressure	14,360	psi
Collapse Resistance	12,080	psi
Max. Structural Bending	89	°/100ft
Max. Bending with ISO/API Sealability	30	°/100ft

* 87.5% RBW

TORQUE VALUES		
Min. Make-up torque	20,000	ft.lb
Opt. Make-up torque	22,500	ft.lb
Max. Make-up torque	25,000	ft.lb
Max. Torque with Sealability (MTS)	40,000	ft.lb

VAM® SPRINT-SF is a semi-flush connection innovatively designed for extreme shale applications. Its high tension rating and ultra high torque capacity make it ideal to run a fill string length as production casing in shale wells with extended horizontal sections and tight clearance requirements.

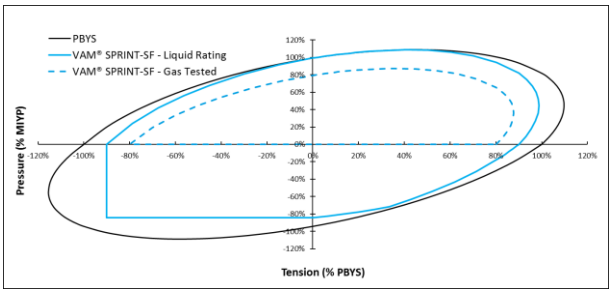

Do you need help on this product? - Remember no one knows VAM® like VAM®

canada@vamfieldservice.com
usa@vamfieldservice.com
mexico@vamfieldservice.com
brazil@vamfieldservice.com

uk@vamfieldservice.com
dubai@vamfieldservice.com
nigeria@vamfieldservice.com
angola@vamfieldservice.com

china@vamfieldservice.com
baku@vamfieldservice.com
singapore@vamfieldservice.com
australia@vamfieldservice.com

Over 140 VAM® Specialists available worldwide 24/7 for Rig Site Assistance

VAM USA

Metal One Corp.	MO-FXL	Page	MCTP
Metal One	Connection Data Sheet	Date	3-Nov-16
		Rev.	0

Geometry

MO-FXL

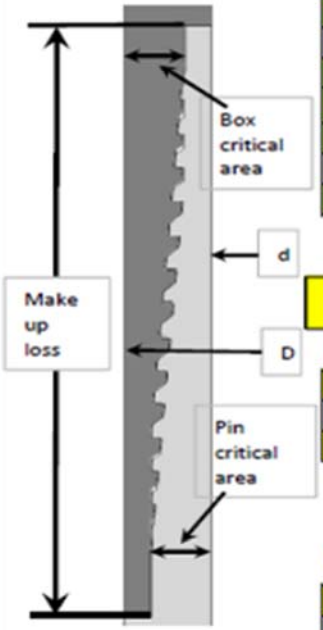

Pipe Body

	Imperial		S.I.	
Grade	P110HC *1		P110HC *1	
Pipe OD (D)	7 5/8	in	193.68	mm
Weight	29.70	lb/ft	44.25	kg/m
Actual weight	29.04		43.26	kg/m
Wall Thickness (t)	0.375	in	9.53	mm
Pipe ID (d)	6.875	in	174.63	mm
Pipe body cross section	8.537	in^2	5,508	mm^2
Drift Dia.	6.750	in	171.45	mm

Connection

Box OD (W)	7.625	in	193.68	mm
PIN ID	6.875	in	174.63	mm
Make up Loss	4.219	in	107.16	mm
Box Critical Area	5.714	in^2	3686	mm^2
Joint load efficiency	70	%	70	%
Thread Taper	1 / 10 (1.2" per ft)			
Number of Threads	5 TPI			

Performance

Performance Properties for Pipe Body

S.M.Y.S. *1	1,067	kips	4,747	kN
M.I.Y.P. *1	10,760	psi	74.21	MPa
Collapse Strength *1	7,360	psi	50.76	MPa

Note S.M.Y.S.= Specified Minimum YIELD Strength of Pipe body
M.I.Y.P. = Minimum Internal Yield Pressure of Pipe body
*1 Based on VSB P110HC (YS=125~140ksi)

Performance Properties for Connection

Tensile Yield load	747 kips (70% of S.M.Y.S.)
Min. Compression Yield	747 kips (70% of S.M.Y.S.)
Internal Pressure	8,610 psi (80% of M.I.Y.P.)
External Pressure	100% of Collapse Strength
Max. DLS (deg. /100ft)	40

Recommended Torque

Min.	15,500	ft-lb	21,000	N-m
Opti.	17,200	ft-lb	23,300	N-m
Max.	18,900	ft-lb	25,600	N-m
Operational Max.	23,600	ft-lb	32,000	N-m

Note : Operational Max. torque can be applied for high torque application

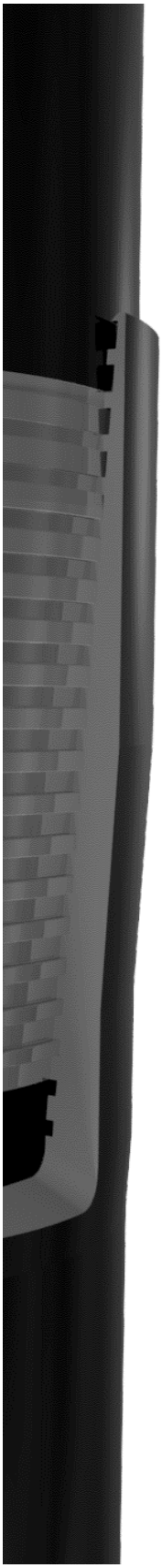

Issued on: 09 Dec. 2020 by Wesley Ott

VAM® SPRINT-SF
Connection Data Sheet

OD	Weight (lb/ft)	Wall Th.	Grade	Spec. Drift:	Connection
8 3/4 in.	Nominal: 38.50 Plain End: 36.98	0.415 in.	P110EC	7.875 in.	VAM® SPRINT-SF

PIPE PROPERTIES		
Nominal OD	8.750	in.
Nominal ID	7.920	in.
Nominal Cross Section Area	10.867	sqin.
Grade Type	High Yield	
Min. Yield Strength	125	ksi
Max. Yield Strength	140	ksi
Min. Ultimate Tensile Strength	135	ksi

CONNECTION PROPERTIES		
Connection Type	Integral Semi-Flush	
Connection OD (nom):	9.009	in.
Connection ID (nom):	7.945	in.
Make-Up Loss	4.905	in.
Critical Cross Section	9.970	sqin.
Tension Efficiency	89.0	% of pipe
Compression Efficiency	80.0	% of pipe
Internal Pressure Efficiency	87	% of pipe
External Pressure Efficiency	100	% of pipe

CONNECTION PERFORMANCES		
Tensile Yield Strength	1,209	klb
Compression Resistance	1,086	klb
Internal Yield Pressure	9,030	psi
Collapse Resistance	5,210	psi
Max. Structural Bending	55	°/100ft
Max. Bending with ISO/API Sealability	30	°/100ft

* 87.5% RBW

TORQUE VALUES		
Min. Make-up torque	20,750	ft.lb
Opt. Make-up torque	23,250	ft.lb
Max. Make-up torque	25,750	ft.lb
Max. Torque with Sealability (MTS)	50,000	ft.lb

VAM® SPRINT-SF is a semi-flush connection innovatively designed for extreme shale applications. Its high tension rating and ultra high torque capacity make it ideal to run a fill string length as production casing in shale wells with extended horizontal sections and tight clearance requirements.

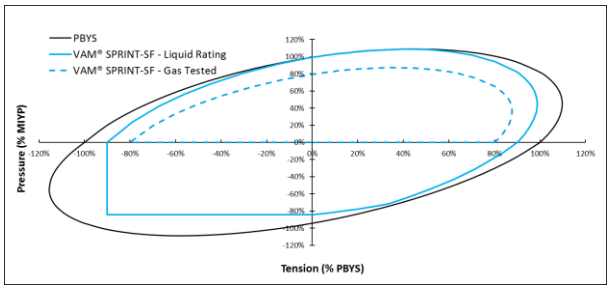

Do you need help on this product? - Remember no one knows VAM® like VAM®

canada@vamfieldservice.com
usa@vamfieldservice.com
mexico@vamfieldservice.com
brazil@vamfieldservice.com
uk@vamfieldservice.com
dubai@vamfieldservice.com
nigeria@vamfieldservice.com
angola@vamfieldservice.com
china@vamfieldservice.com
baku@vamfieldservice.com
singapore@vamfieldservice.com
australia@vamfieldservice.com

Over 140 VAM® Specialists available worldwide 24/7 for Rig Site Assistance

GENERIC MILL

~~U. S. Steel Tubular Products~~

9.625" 36.00lbs/ft (0.352" Wall) J55

2/9/2021 7:39:08 AM

MECHANICAL PROPERTIES	Pipe	BTC	LTC	STC	
Minimum Yield Strength	55,000	--	--	--	psi
Maximum Yield Strength	80,000	--	--	--	psi
Minimum Tensile Strength	75,000	--	--	--	psi
DIMENSIONS	**Pipe**	**BTC**	**LTC**	**STC**	
Outside Diameter	9.625	10.625	10.625	10.625	in.
Wall Thickness	0.352	--	--	--	in.
Inside Diameter	8.921	8.921	8.921	8.921	in.
Standard Drift	8.765	8.765	8.765	8.765	in.
Alternate Drift	--	--	0.000	--	in.
Nominal Linear Weight, T&C	36.00	--	--	--	lbs/ft
Plain End Weight	34.89	--	--	--	lbs/ft
PERFORMANCE	**Pipe**	**BTC**	**LTC**	**STC**	
Minimum Collapse Pressure	2,020	2,020	2,020	2,020	psi
Minimum Internal Yield Pressure	3,520	3,520	3,520	3,520	psi
Minimum Pipe Body Yield Strength	564	--	--	--	1,000 lbs
Joint Strength	--	639	453	394	1,000 lbs
Reference Length	--	11,833	8,389	7,288	ft
MAKE-UP DATA	**Pipe**	**BTC**	**LTC**	**STC**	
Make-Up Loss	--	4.81	4.75	3.38	in.
Minimum Make-Up Torque	--	--	3,400	2,960	ft-lbs
Maximum Make-Up Torque	--	--	5,660	4,930	ft-lbs

Legal Notice

All material contained in this publication is for general information only. This material should not therefore be used or relied upon for any specific application without independent competent professional examination and verification of accuracy, suitability and applicability. Anyone making use of this material does so at their own risk and assumes any and all liability resulting from such use. U. S. Steel disclaims any and all expressed or implied warranties of fitness for any general or particular application.

U. S. Steel Tubular Products
460 Wildwood Forest Drive, Suite 300S
Spring, Texas 77380

1-877-893-9461
connections@uss.com
www.usstubular.com

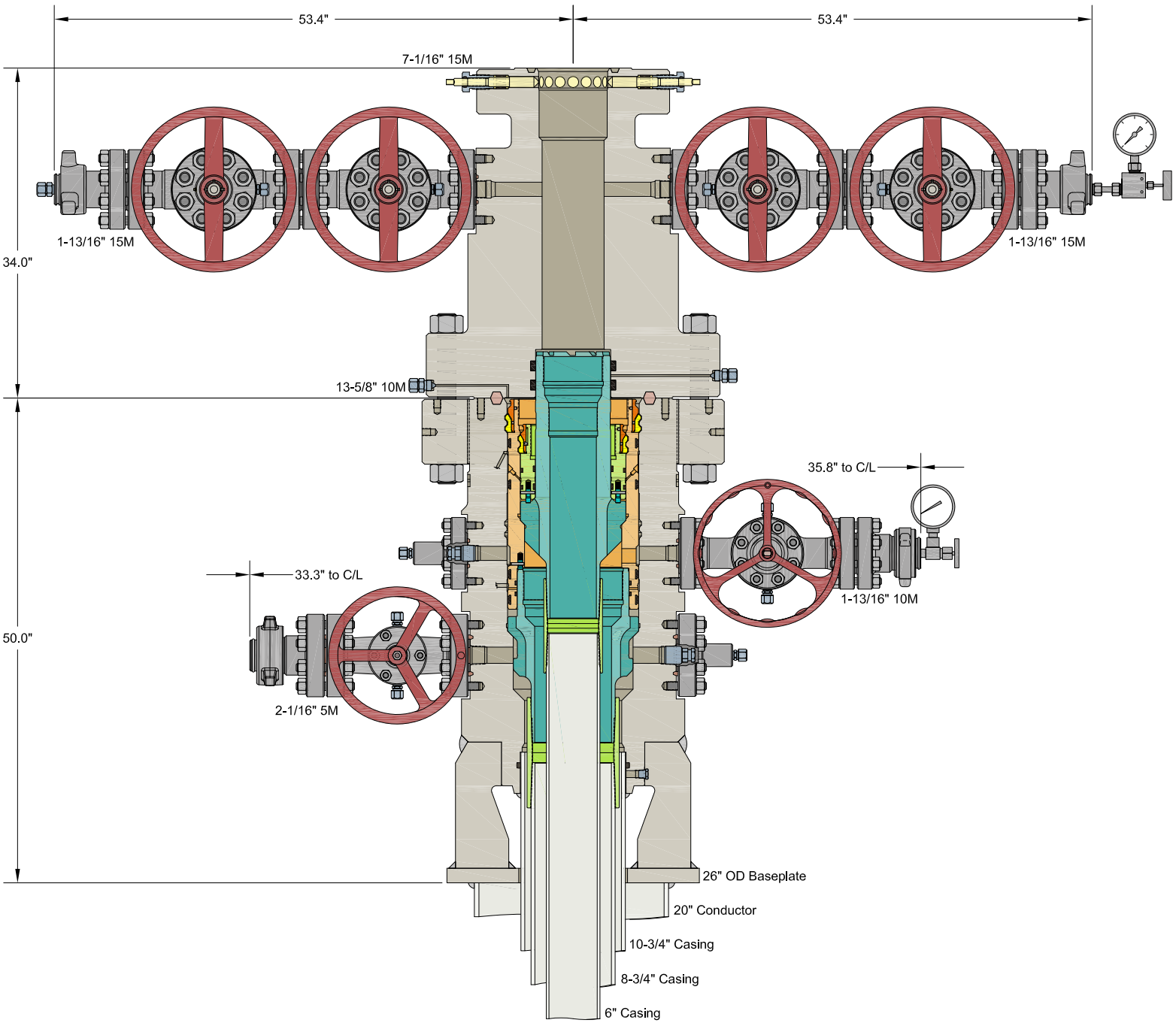

INFORMATION CONTAINED HEREIN IS THE PROPERTY OF CACTUS WELLHEAD, LLC. REPRODUCTION, DISCLOSURE, OR USE THEREOF IS PERMISSIBLE ONLY AS PROVIDED BY CONTRACT OR AS EXPRESSLY AUTHORIZED BY CACTUS WELLHEAD, LLC.

ALL DIMENSIONS APPROXIMATE

CACTUS WELLHEAD LLC

EOG RESOURCES

10-3/4" x 8-3/4" x 6" MBU-3T-SF-SOW Wellhead System
With 8-5/8" & 6" Pin Bottom Mandrel Casing Hangers
And 13-5/8" 10M x 7-1/16" 15M CTH-DBLHPS Tubing Head

DRAWN	DLE	14APR21
APPRV		

DRAWING NO. SDT-3141-1

Released to Imaging: 11/13/2026 9:51:12 AM
Received by OCD: 10/28/2026 2:09:08 PM

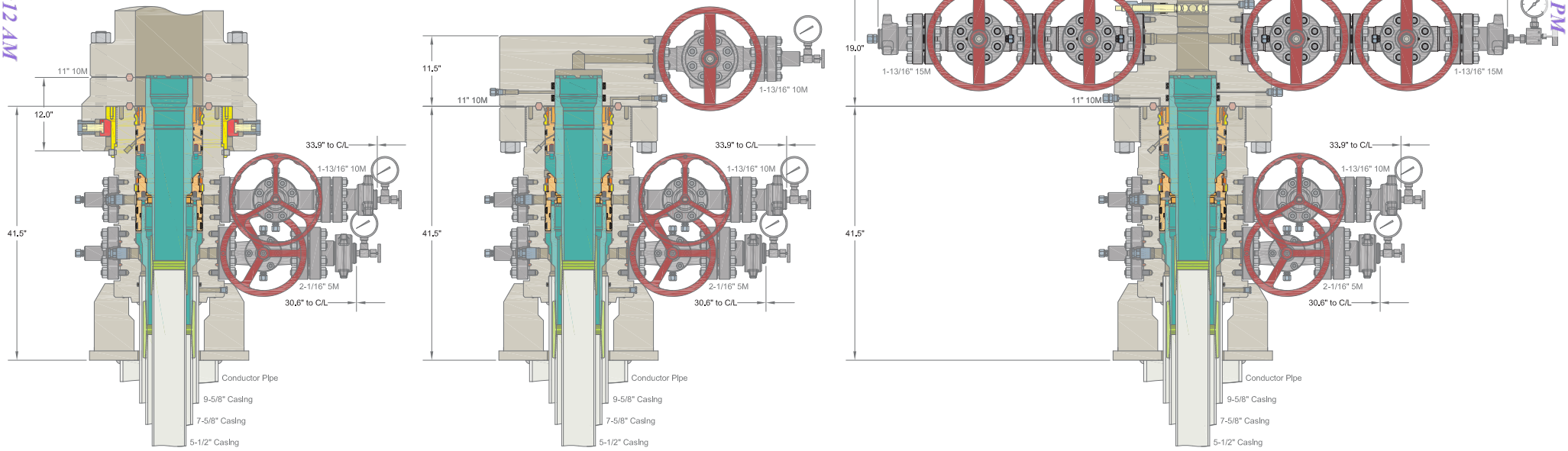

INFORMATION CONTAINED HEREIN IS THE PROPERTY OF CACTUS WELLHEAD, LLC. REPRODUCTION, DISCLOSURE, OR USE THEREOF IS PERMISSIBLE ONLY AS PROVIDED BY CONTRACT OR AS EXPRESSLY AUTHORIZED BY CACTUS WELLHEAD, LLC.

ALL DIMENSIONS APPROXIMATE

CACTUS WELLHEAD LLC

EOG RESOURCES
DELAWARE

20" x 9-5/8" x 7-5/8" x 5-1/2" MBU-T-SF SOW Wellhead System
With 11" 10M x 5-1/8" 15M CMT-DBLHPS-SB Tubing Head,
Mandrel Hangers, Quick Connect Drilling Adapter And TA Cap

DRAWN	DLE	23OCT18
APPRV		

DRAWING NO. HBE0000010

eog resources

EOG Batch Casing

Pad Name: Never Better 14 Fed Com

SHL: Section 14, Township 22-S, Range 32-E, Lea County, NM

Well Name	API #	Surface		Intermediate		Production	
		MD	TVD	MD	TVD	MD	TVD
Never Better 14 Fed Com #601H	30-025-*****	1,100	1,100	11,195	11,098	22,252	11,950
Never Better 14 Fed Com #602H	30-025-*****	1,100	1,100	11,139	11,098	22,202	11,950
Never Better 14 Fed Com #603H	30-025-*****	1,100	1,100	11,174	11,098	22,236	11,950
Never Better 14 Fed Com #604H	30-025-*****	1,100	1,100	11,354	11,098	22,391	11,950
Never Better 14 Fed Com #701H	30-025-*****	1,100	1,100	11,169	11,098	22,425	12,150
Never Better 14 Fed Com #702H	30-025-*****	1,100	1,100	11,235	11,098	22,487	12,150
Never Better 14 Fed Com #703H	30-025-*****	1,100	1,100	11,145	11,098	22,408	12,150
Never Better 14 Fed Com #704H	30-025-*****	1,100	1,100	11,155	11,098	22,418	12,150
Never Better 14 Fed Com #705H	30-025-*****	1,100	1,100	11,149	11,098	22,412	12,150
Never Better 14 Fed Com #706H	30-025-*****	1,100	1,100	11,228	11,098	22,485	12,150
Never Better 14 Fed Com #707H	30-025-*****	1,100	1,100	11,301	11,098	22,547	12,150
Never Better 14 Fed Com #708H	30-025-*****	1,100	1,100	11,430	11,098	22,650	12,150
Never Better 14 Fed Com #721H	30-025-*****	1,100	1,100	11,192	11,098	22,568	12,270
Never Better 14 Fed Com #722H	30-025-*****	1,100	1,100	11,120	11,098	22,502	12,270
Never Better 14 Fed Com #723H	30-025-*****	1,100	1,100	11,185	11,098	22,566	12,270
Never Better 14 Fed Com #724H	30-025-*****	1,100	1,100	11,199	11,098	22,580	12,270
Never Better 14 Fed Com #725H	30-025-*****	1,100	1,100	11,179	11,098	22,561	12,270
Never Better 14 Fed Com #726H	30-025-*****	1,100	1,100	11,305	11,098	22,670	12,270
Never Better 14 Fed Com #727H	30-025-*****	1,100	1,100	11,354	11,098	22,710	12,270

EOG Batch Casing

Variances

EOG requests the additional variance(s) in the attached document(s):

- EOG BLM Variance 3a_b - BOP Break-test and Offline Intermediate Cement
- EOG BLM Variance 2a - Inermediate Bradenhead Cement

eog resources

EOG Batch Casing

GEOLOGIC NAME OF SURFACE FORMATION:

Permian

ESTIMATED TOPS OF IMPORTANT GEOLOGICAL MARKERS:

Rustler	976'
Tamarisk Anhydrite	1,079'
Top of Salt	1,288'
Base of Salt	4,543'
Capitan	4,855'
Bell Canyon	4,906'
Cherry Canyon	5,790'
Brushy Canyon	6,991'
Bone Spring Lime	8,764'
Leonard (Avalon) Shale	8,918'
1st Bone Spring Sand	9,923'
2nd Bone Spring Shale	10,185'
2nd Bone Spring Sand	10,453'
3rd Bone Spring Carb	10,998'
3rd Bone Spring Sand	11,673'
Wolfcamp	12,019'

ESTIMATED DEPTHS OF ANTICIPATED FRESH WATER, OIL OR GAS:

Upper Permian Sands	0- 400’	Fresh Water
Bell Canyon	4,906'	Oil
Cherry Canyon	5,790'	Oil
Brushy Canyon	6,991'	Oil
Leonard (Avalon) Shale	8,918'	Oil
1st Bone Spring Sand	9,923'	Oil
2nd Bone Spring Shale	10,185'	Oil
2nd Bone Spring Sand	10,453'	Oil

No other formations are expected to give up oil, gas or fresh water in measurable quantities. Surface fresh water sands will be protected by setting surface casing at 1,100' and circulating cement back to surface.

eog resources

Never Better 14 Fed Com 723H

1. GEOLOGIC NAME OF SURFACE FORMATION:

Permian

2. ESTIMATED TOPS OF IMPORTANT GEOLOGICAL MARKERS:

Rustler	976'
Tamarisk Anhydrite	1,079'
Top of Salt	1,288'
Base of Salt	4,543'
Lamar	4,855'
Bell Canyon	4,906'
Cherry Canyon	5,790'
Brushy Canyon	6,991'
Bone Spring Lime	8,764'
Leonard Shale	8,918'
1st Bone Spring Sand	9,923'
2nd Bone Spring Shale	10,185'
2nd Bone Spring Sand	10,453'
3rd Bone Spring Carb	10,998'
3rd Bone Spring Sand	11,673'
Wolfcamp	12,019'
TD	12,270'

3. ESTIMATED DEPTHS OF ANTICIPATED FRESH WATER, OIL OR GAS:

Upper Permian Sands	0- 400’	Fresh Water
Bell Canyon	4,906'	Oil
Cherry Canyon	5,790'	Oil
Brushy Canyon	6,991'	Oil
Leonard (Avalon) Shale	8,918'	Oil
1st Bone Spring Sand	9,923'	Oil
2nd Bone Spring Shale	10,185'	Oil
2nd Bone Spring Sand	10,453'	Oil
3rd Bone Spring Carb	10,998'	Oil
3rd Bone Spring Sand	11,673'	Oil
Wolfcamp	12,019'	Oil

No other Formations are expected to give up oil, gas or fresh water in measurable quantities. Surface fresh water sands will be protected by setting 9-5/8" or 10-3/4" casing at 1,100' and circulating cement back to surface.

eog resources

Never Better 14 Fed Com 723H

4. CASING PROGRAM - Design A

Hole Size	Interval MD From (ft)	Interval MD To (ft)	Interval TVD From (ft)	Interval TVD To (ft)	Csg OD	Weight	Grade	Conn
12-1/4"	0	1,100	0	1,100	9-5/8"	36#	J-55	LTC
8-3/4"	0	11,185	0	11,098	7-5/8"	29.7#	ICYP-110	MO FXL
6-3/4"	0	10,685	0	10,600	5-1/2"	20#	P110-EC	DWC/C IS MS
6-3/4"	10,685	11,185	10,600	11,100	5-1/2"	20#	P110-EC	VAM Sprint SF
6-3/4"	11,185	22,566	11,100	12,270	5-1/2"	20#	P110-EC	DWC/C IS MS

Variance is requested to waive the centralizer requirements for the 7-5/8" casing in the 8-3/4" hole size. An expansion additive will be utilized, in the cement slurry, for the entire length of the 8-3/4" hole interval to maximize cement bond and zonal isolation.

Variance is also requested to waive any centralizer requirements for the 5-1/2" casing in the 6-3/4" hole size. An expansion additive will be utilized, in the cement slurry, for the entire length of the 6-3/4" hole interval to maximize cement bond and zonal isolation.

Variance is also requested to waive the annular clearance requirements for the 5-1/2" casing by 7-5/8" casing annulus to the proposed top of cement.

EOG requests permission to allow deviation from the 0.422'' annulus clearance requirement from Onshore Order #2 under the following conditions:

- Annular clearance to meet or exceed 0.422'' between intermediate casing ID and production casing coupling only on the first 500' overlap between both casing strings.
- Annular clearance less than 0.422'' is acceptable for the production open hole section.

Cementing Program:

Depth	No. Sacks	Wt. ppg	Yld Ft3/sk	Slurry Description
1,100' 9-5/8"	310	13.5	1.73	Lead: Class C + 4.0% Bentonite Gel + 0.5% CaCl2 + 0.25 lb/sk Cello-Flake (TOC @ Surface)
	80	14.8	1.34	Tail: Class C + 0.6% FL-62 + 0.25 lb/sk Cello-Flake + 0.2% Sodium Metasilicate (TOC @ 900')
11,098' 7-5/8"	510	14.2	1.11	1st Stage (Tail): Class C + 0.6% Halad-9 + 0.45% HR-601 + 3% Microbond (TOC @ 6,790')
	1160	14.8	1.5	2nd Stage (Bradenhead squeeze): Class C + 3% Salt + 1% PreMag-M + 6% Bentonite Gel (TOC @ surface)
22,566' 5-1/2"	1525	13.2	1.31	Lead: Class H + 0.4% Halad-344 + 0.35% HR-601 + 3% Microbond (TOC @ 10,598')

eog resources

Never Better 14 Fed Com 723H

Additive	Purpose
Bentonite Gel	Lightweight/Lost circulation prevention
Calcium Chloride	Accelerator
Cello-flake	Lost circulation prevention
Sodium Metasilicate	Accelerator
MagOx	Expansive agent
Pre-Mag-M	Expansive agent
Sodium Chloride	Accelerator
FL-62	Fluid loss control
Halad-344	Fluid loss control
Halad-9	Fluid loss control
HR-601	Retarder
Microbond	Expansive Agent

EOG requests variance from minimum standards to pump a two stage cement job on the 7-5/8" intermediate casing string with the first stage being pumped conventionally with the calculated top of cement at the Brushy Canyon (6,991') and the second stage performed as a 1000 sack bradenhead squeeze with planned cement from the Brushy Canyon to surface. If necessary, a top out consisting of 160 sacks of Class C cement + 3% Salt + 1% PreMag-M + 6% Bentonite Gel (2.30 yld, 12.91 ppg) will be executed as a contingency. Top will be verified by Echo-meter.

EOG will include the Echo-meter verified fluid top and the volume of displacement fluid above the cement slurry in the annulus in all post-drill sundries on wells utilizing this cement program.

EOG will report to the BLM the volume of fluid (limited to 5 bbls) used to flush intermediate casing valves following backside cementing procedures.

Cement integrity tests will be performed immediately following plug bump.

Note: Cement volumes based on bit size plus at least 25% excess in the open hole plus 10% excess in the cased-hole overlap section.

5. MINIMUM SPECIFICATIONS FOR PRESSURE CONTROL:

Variance is requested to use a co-flex line between the BOP and choke manifold (instead of using a 4” OD steel line).

The minimum blowout preventer equipment (BOPE) shown in Exhibit #1 will consist of a single ram, mud cross and double ram-type (10,000 psi WP) preventer and an annular preventer (5,000 psi WP). Both units will be hydraulically operated and the ram-type will be equipped with blind rams on bottom and drill pipe rams on top.

eog resources

Never Better 14 Fed Com 723H

EOG will utilize wing unions on BOPE connections that can be isolated from wellbore pressure through means of a choke. All wing unions will be rated to a pressure that meets or exceeds the pressure rating of the BOPE system.

Variance is requested to use a 5,000 psi annular BOP with the 10,000 psi BOP stack.

Pipe rams and blind rams will be operationally checked on each trip out of the hole. These checks will be noted on the daily tour sheets.

A hydraulically operated choke will be installed prior to drilling out of the intermediate casing shoe.

6. TYPES AND CHARACTERISTICS OF THE PROPOSED MUD SYSTEM:

During this procedure we plan to use a Closed-Loop System and haul contents to the required disposal.

The applicable depths and properties of the drilling fluid systems are as follows:

Depth	Type	Weight (ppg)	Viscosity	Water Loss
0 – 1,100'	Fresh - Gel	8.6-8.8	28-34	N/c
1,100' – 11,098'	Brine	10.0-10.2	28-34	N/c
11,098’ – 11,876'	Oil Base	8.7-9.4	58-68	N/c - 6
11,876’ – 22,566’ Lateral	Oil Base	10.0-14.0	58-68	4 - 6

The highest mud weight needed to balance formation is expected to be 11.5 ppg. In order to maintain hole stability, mud weights up to 14.0 ppg may be utilized.

An electronic pit volume totalizer (PVT) will be utilized on the circulating system, to monitor pit volume, flow rate, pump pressure and stroke rate.

Sufficient mud materials to maintain mud properties and meet minimum lost circulation and weight increase requirements will be kept at the wellsite at all times.

7. AUXILIARY WELL CONTROL AND MONITORING EQUIPMENT:

(A) A kelly cock will be kept in the drill string at all times.

(B) A full opening drill pipe-stabbing valve (inside BOP) with proper drill pipe connections will be on the rig floor at all times.

(C) H2S monitoring and detection equipment will be utilized from surface casing point to TD.

eog resources

Never Better 14 Fed Com 723H

8. LOGGING, TESTING AND CORING PROGRAM:

Open-hole logs are not planned for this well.

GR-CCL Will be run in cased hole during completions phase of operations.

9. ABNORMAL CONDITIONS, PRESSURES, TEMPERATURES AND POTENTIAL HAZARDS:

The estimated bottom-hole temperature (BHT) at TD is 193 degrees F with an estimated maximum bottom-hole pressure (BHP) at TD of 8,933 psig and a maximum anticipated surface pressure of 6,233 psig (based on 14.0 ppg MW). No hydrogen sulfide or other hazardous gases or fluids have been encountered, reported or are known to exist at this depth in this area. Severe loss circulation is expected from 6,991' to intermediate casing point.

10. ANTICIPATED STARTING DATE AND DURATION OF OPERATIONS:

The drilling operation should be finished in approximately one month. If the well is productive, an additional 60-90 days will be required for completion and testing before a decision is made to install permanent facilities.

EOG Resources requests the option to contract a Surface Rig to drill, set surface casing, and Cement on the subject well. After WOC 8 hours or 500 psi compressive strength (whichever is greater), the Surface Rig will move off so the wellhead can be installed. A welder will cut the casing to the proper height and weld on the wellhead (both “A” and “B” sections). The weld will be tested to 1,500 psi. All valves will be closed and a wellhead cap will be installed (diagram attached). If the timing between rigs is such that EOG Resources would not be able to preset the surface, the Primary Rig will MIRU and drill the well in its entirety per the APD.

11. WELLHEAD:

A multi-bowl wellhead system will be utilized.

After running the 9-5/8” surface casing, a 9-5/8” BOP/BOPE system with a minimum working pressure of 10,000 psi will be installed on the wellhead system and will be pressure tested to 250 psi low followed by a 10,000 psi pressure test. This pressure test will be repeated at least every 30 days, as per Onshore Order No. 2.

The minimum working pressure of the BOP and related BOPE required for drilling below the surface casing shoe shall be 10,000 psi.

The multi-bowl wellhead will be installed by vendor’s representative(s). A copy of the installation instructions for the Cactus Multi-Bowl WH system has been sent to the NM BLM office in Carlsbad, NM.

Never Better 14 Fed Com 723H

The wellhead will be installed by a third party welder while being monitored by WH vendor's representative.

All BOP equipment will be tested utilizing a conventional test plug. Not a cup or J-packer type. EOG Resources reserves the option to conduct BOPE testing during wait on cement periods provided a test plug is utilized.

A solid steel body pack-off will be utilized after running and cementing the intermediate casing. After installation the pack-off and lower flange will be pressure tested to 5,000 psi.

Casing strings will be tested as per Onshore Order No. 2 to at least 0.22 psi/ft or 1,500 psi, whichever is greater.

EOG Resources Inc. (EOG) respectfully requests a variance from the minimum standards for well control equipment testing of Onshore Order No. 2 (item III.A.2.a.i) to allow a testing schedule of the blow out preventer (BOP) and blow out prevention equipment (BOPE) along with Batch Drilling & Offline cement operations to include the following:

- Full BOPE test at first installation on the pad.
- Full BOPE test every 21 days per Onshore Order No. 2.
- Function test BOP elements per Onshore Order No. 2.
- Break testing BOP and BOPE coupled with batch drilling operations and option to offline cement and/or remediate (if needed) any surface or intermediate sections, according to attached offline cementing support documentation.
- After the well section is secured, the BOP will be disconnected from the wellhead and walked with the rig to another well on the pad.
- TA cap will also be installed per Wellhead vendor procedure and pressure inside the casing will be monitored via the valve on the TA cap as per standard batch drilling ops.
- See attached "EOG BLM Variance 3a -Offline Cement Intermediate Operational Procedure"

eog resources

Never Better 14 Fed Com 723H

12. TUBING REQUIREMENTS

EOG respectively requests an exception to the following NMOCD rule:

- 19.15.16.10 Casing AND TUBING RQUIREMENTS:
  J (3): "The operator shall set tubing as near the bottom as practical and tubing perforations shall not be more than 250 feet above top of pay zone."

With horizontal flowing and gas lifted wells an end of tubing depth placed at or slightly above KOP is a conservative way to ensure the tubing stays clean from debris, plugging, and allows for fewer well interventions post offset completion. The deeper the tubulars are run into the curve, the higher the probability is that the tubing will become stuck in sand and or well debris as the well produces over time. An additional consideration for EOT placement during artificial lift installations is avoiding the high dog leg severity and inclinations found in the curve section of the wellbore to help improve reliability and performance. Dog leg severity and inclinations tend not to hamper gas lifted or flowing wells, but they do effect other forms of artificial lift like rod pump or ESP (electric submersible pump). Keeping the EOT above KOP is an industry best practice for those respective forms of artificial lift.

eog resources

Never Better 14 Fed Com 723H

549' FNL
1167' FWL
Section 14
T-22-S, R-32-E

Proposed Wellbore

KB: 3778'
GL: 3753'

API: 30-025-*****

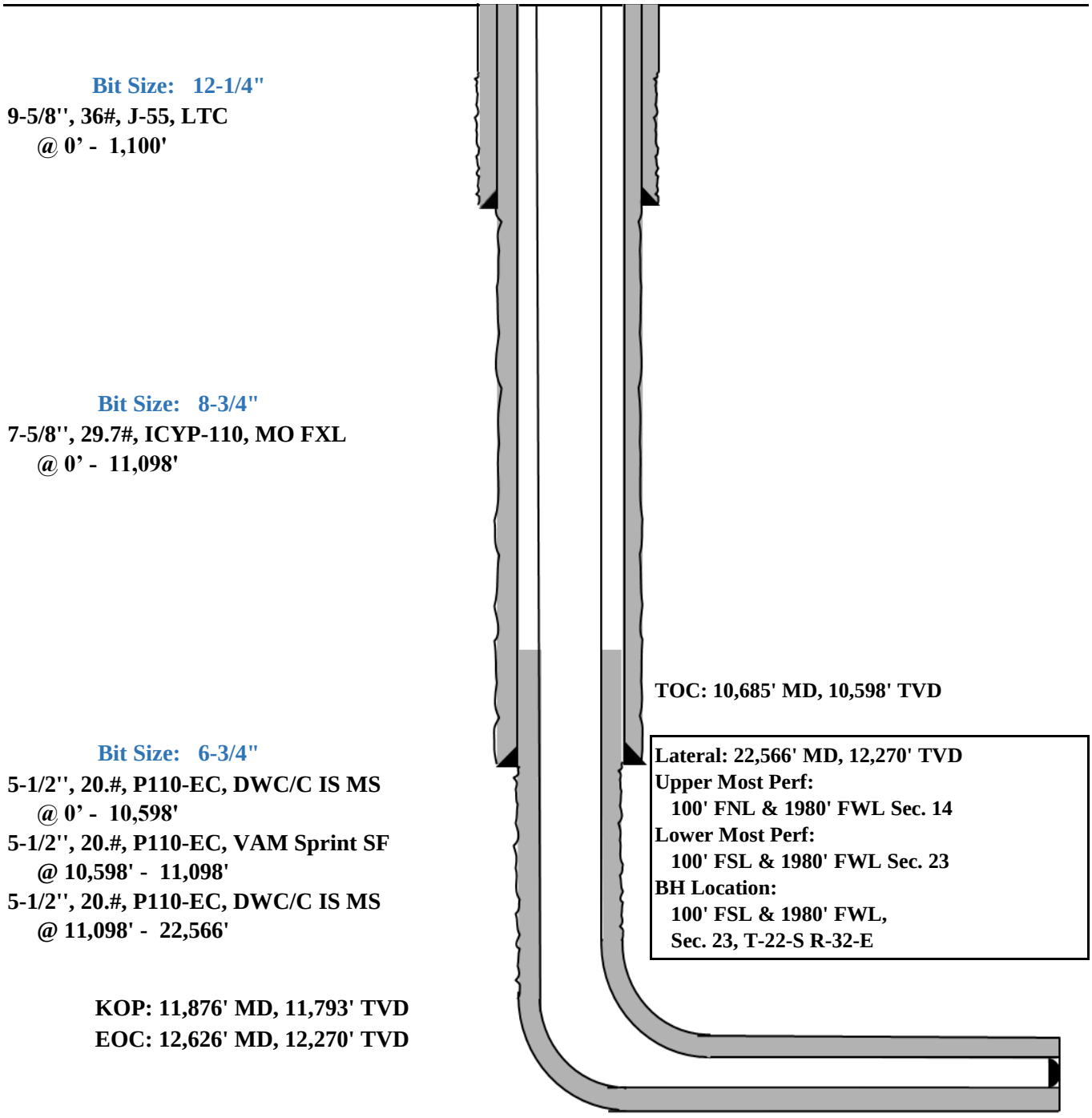

eog resources

Never Better 14 Fed Com 723H

Design B

4. CASING PROGRAM

Hole Size	Interval MD From (ft)	Interval MD To (ft)	Interval TVD From (ft)	Interval TVD To (ft)	Csg OD	Weight	Grade	Conn
13"	0	1,100	0	1,100	10-3/4"	40.5#	J-55	STC
9-7/8"	0	11,185	0	11,098	8-3/4"	38.5#	P110-EC	SLIJ II NA
7-7/8"	0	22,566	0	12,270	6"	24.5#	P110-EC	VAM Sprint-SF

Variance is requested to waive the centralizer requirements for the 8-3/4" casing in the 9-7/8" hole size. An expansion additive will be utilized, in the cement slurry, for the entire length of the 9-7/8" hole interval to maximize cement bond and zonal isolation.

Variance is also requested to waive any centralizer requirements for the 6" casing in the 7-7/8" hole size. An expansion additive will be utilized, in the cement slurry, for the entire length of the 7-7/8" hole interval to maximize cement bond and zonal isolation.

Variance is also requested to waive the annular clearance requirements for the 6" casing by 8-3/4" casing annulus to the proposed top of cement.

EOG requests permission to allow deviation from the 0.422'' annulus clearance requirement from Onshore Order #2 under the following conditions:

- Annular clearance to meet or exceed 0.422'' between intermediate casing ID and production casing coupling only on the first 500' overlap between both casing strings.
- Annular clearance less than 0.422'' is acceptable for the production open hole section.

Cementing Program:

Depth	No. Sacks	Wt. ppg	Yld Ft3/sk	Slurry Description
1,100' 10-3/4"	290	13.5	1.73	Lead: Class C + 4.0% Bentonite Gel + 0.5% CaCl2 + 0.25 lb/sk Cello-Flake (TOC @ Surface)
	70	14.8	1.34	Tail: Class C + 0.6% FL-62 + 0.25 lb/sk Cello-Flake + 0.2% Sodium Metasilicate (TOC @ 900')
11,098' 8-3/4"	570	14.2	1.11	1st Stage (Tail): Class C + 0.6% Halad-9 + 0.45% HR-601 + 3% Microbond (TOC @ 6,790')
	1320	14.8	1.5	2nd Stage (Bradenhead squeeze): Class C + 3% Salt + 1% PreMag-M + 6% Bentonite Gel (TOC @ surface)
22,566' 6"	1670	13.2	1.31	Lead: Class H + 0.4% Halad-344 + 0.35% HR-601 + 3% Microbond (TOC @ 10,598')

Never Better 14 Fed Com 723H

EOG requests variance from minimum standards to pump a two stage cement job on the 8-3/4" intermediate casing string with the first stage being pumped conventionally with the calculated top of cement at the Brushy Canyon (6,991') and the second stage performed as a 1000 sack bradenhead squeeze with planned cement from the Brushy Canyon to surface. If necessary, a top out consisting of 320 sacks of Class C cement + 3% Salt + 1% PreMag-M + 6% Bentonite Gel (2.30 yld, 12.91 ppg) will be executed as a contingency. Top will be verified by Echo-meter.

EOG will include the Echo-meter verified fluid top and the volume of displacement fluid above the cement slurry in the annulus in all post-drill sundries on wells utilizing this cement program.

EOG will report to the BLM the volume of fluid (limited to 5 bbls) used to flush intermediate casing valves following backside cementing procedures.

Cement integrity tests will be performed immediately following plug bump.

Note: Cement volumes based on bit size plus at least 25% excess in the open hole plus 10% excess in the cased-hole overlap section.

Wellhead:

EOG Resources Inc. (EOG) respectfully requests a variance from the minimum standards for well control equipment testing of Onshore Order No. 2 (item III.A.2.a.i) to allow a testing schedule of the blow out preventer (BOP) and blow out prevention equipment (BOPE) along with Batch Drilling & Offline cement operations to include the following:

- Full BOPE test at first installation on the pad.
- Full BOPE test every 20 days per Onshore Order No. 2.
- Function test BOP elements per Onshore Order No. 2.
- Break testing BOP and BOPE coupled with batch drilling operations and option to offline cement and/or remediate (if needed) any surface or intermediate sections, according to attached offline cementing support documentation.
- After the well section is secured, the BOP will be disconnected from the wellhead and walked with the rig to another well on the pad.
- TA cap will also be installed per Wellhead vendor procedure and pressure inside the casing will be monitored via the valve on the TA cap as per standard batch drilling ops.
- See attached "EOG BLM Variance 3a -Offline Cement Intermediate Operational Procedure"

eog resources

Never Better 14 Fed Com 723H

549' FNL
1167' FWL
Section 14
T-22-S, R-32-E

Proposed Wellbore

API: 30-025-*****

KB: 3778'
GL: 3753'

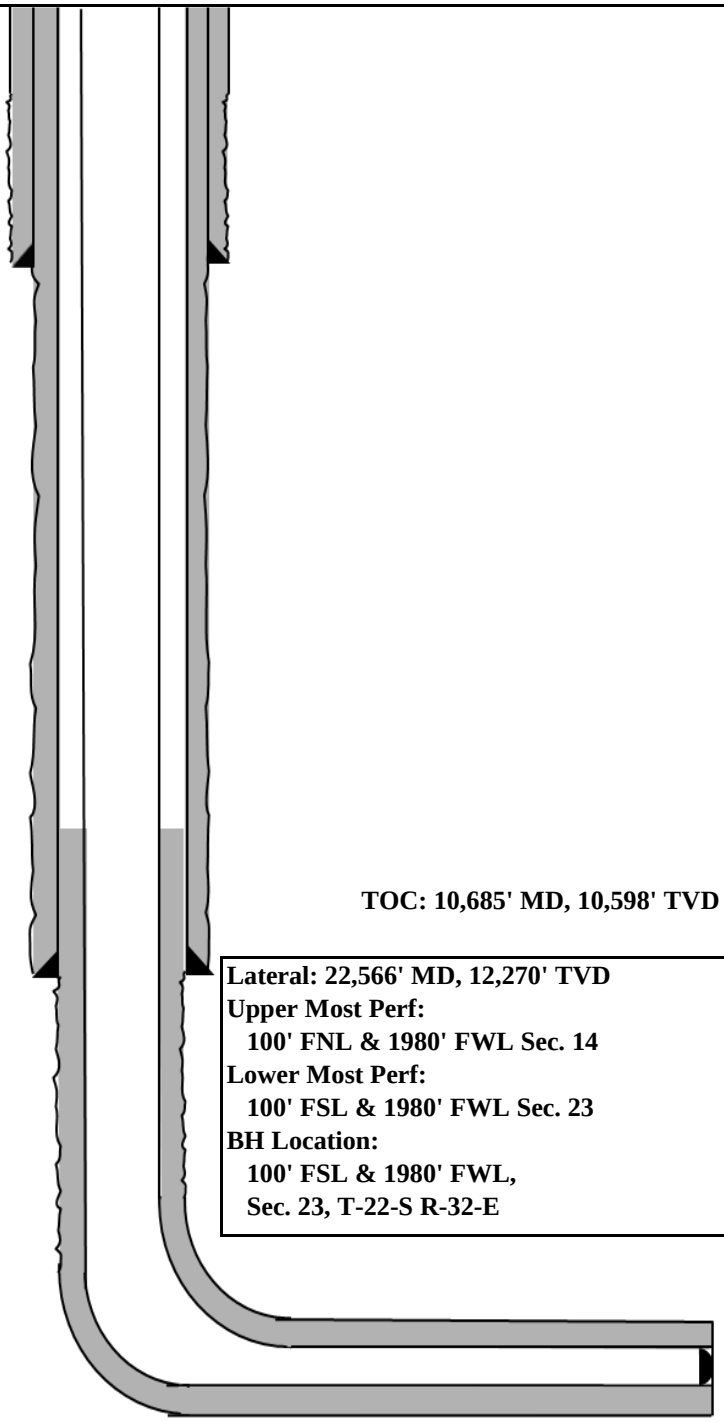

Bit Size: 13"
10-3/4'', 40.5#, J-55, STC,
0' - 1,100'

Bit Size: 9-7/8"
7-5/8'', 29.7#, ICYP-110, MO FXL
@ 0' - 11,098'

Bit Size: 7-7/8"
6'', 24.5#, P110-EC, VAM Sprint-SF,
@ 0' - 22,566'

TOC: 10,685' MD, 10,598' TVD

Lateral: 22,566' MD, 12,270' TVD
Upper Most Perf:
100' FNL & 1980' FWL Sec. 14
Lower Most Perf:
100' FSL & 1980' FWL Sec. 23
BH Location:
100' FSL & 1980' FWL,
Sec. 23, T-22-S R-32-E

KOP: 11,876' MD, 11,793' TVD
EOC: 12,626' MD, 12,270' TVD

Exhibit 4

Well Site Diagram

EOG Resources
Never Better 14 Fed Com #723H

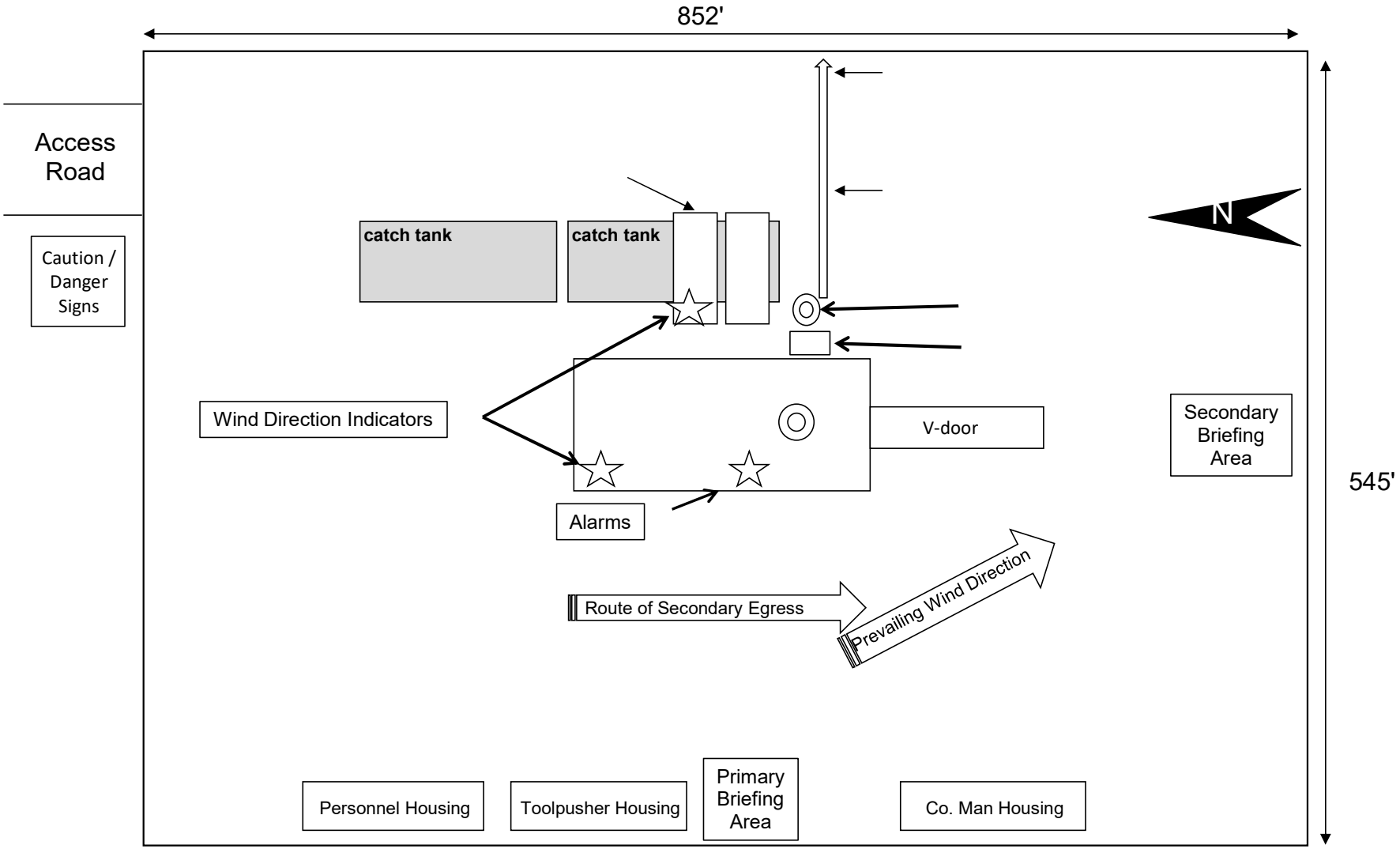

Never Better 14 Fed Com 723H API #: 30-025-*** Variances**

EOG respectfully requests the below variances to be applied to the above well:

- Variance is requested to waive the centralizer requirements for the intermediate casing in the intermediate hole. An expansion additive will be utilized, in the cement slurry, for the entire length of the intermediate interval to maximize cement bond and zonal isolation.
- Variance is also requested to waive the centralizer requirements for the production casing in the production hole. An expansion additive will be utilized, in the cement slurry, for the entire length of the production interval to maximize cement bond and zonal isolation.

- Variance is requested to use a co-flex line between the BOP and choke manifold (instead of using a 4" OD steel line).
- Variance is requested to use a 5,000 psi annular BOP with the 10,000 psi BOP stack.
- EOG Resources requests the option to contract a Surface Rig to drill, set surface casing, and Cement on the subject well. After WOC 8 hours or 500 psi compressive strength (whichever is greater), the Surface Rig will move off so the wellhead can be installed. A welder will cut the casing to the proper height and weld on the wellhead (both "A" and "B" sections). The weld will be tested to 1,500 psi. All valves will be closed and a wellhead cap will be installed (diagram attached). If the timing between rigs is such that EOG Resources would not be able to preset the surface, the Primary Rig will MIRU and drill the well in its entirety per the APD.

EOG requests the additional variance(s) in the attached document(s):

- EOG BLM Variance 3a_b - BOP Break-test and Offline Intermediate Cement
- EOG BLM Variance 2a - Inermediate Bradenhead Cement

10,000 PSI BOP Annular
Variance Request

EOG Resources request a variance to use a 5000 psi annular BOP with a 10,000 psi BOP stack. The component and compatibility tables along with the general well control plans demonstrate how the 5000 psi annular BOP will be protected from pressures that exceed its rated working pressure (RWP). The pressure at which the control of the wellbore is transferred from the annular preventer to another available preventer will not exceed 3500 psi (70% of the RWP of the 5000 psi annular BOP).

1. Component and Preventer Compatibility Tables

The tables below outlines the tubulars and the compatible preventers in use. This table, combined with the drilling fluid, documents that two barriers to flow will be maintained at all times.

9-7/8" & 8-3/4" Intermediate Hole Section 10M psi requirement					
Component	**OD**	**Primary Preventer**	**RWP**	**Alternate Preventer(s)**	**RWP**
Drillpipe	4.500"	Annular	5M	Upper 3.5 - 5.5" VBR Lower 3.5 - 5.5" VBR	10M 10M
HWDP	4.500"	Annular	5M	Upper 3.5 - 5.5" VBR Lower 3.5 - 5.5" VBR	10M 10M
Jars	4.500"	Annular	5M	Upper 3.5 - 5.5" VBR Lower 3.5 - 5.5" VBR	10M 10M
DCs and MWD tools	6.500 – 8.000"	Annular	5M	-	-
Mud Motor	6.750 – 8.000"	Annular	5M	-	-
Intermediate casing	7.625"	Annular	5M	-	-
Open-hole	-	Blind Rams	10M	-	-

6-3/4" Production Hole Section 10M psi requirement					
Component	**OD**	**Primary Preventer**	**RWP**	**Alternate Preventer(s)**	**RWP**
Drillpipe	4.500"	Annular	5M	Upper 3.5 - 5.5" VBR Lower 3.5 - 5.5" VBR	10M 10M
HWDP	4.500"	Annular	5M	Upper 3.5 - 5.5" VBR Lower 3.5 - 5.5" VBR	10M 10M
DCs and MWD tools	4.750 – 5.500"	Annular	5M	Upper 3.5 - 5.5" VBR Lower 3.5 - 5.5" VBR	10M 10M
Mud Motor	4.750 – 5.500"	Annular	5M	Upper 3.5 - 5.5" VBR Lower 3.5 - 5.5" VBR	10M 10M
Mud Motor	5.500 – 5.750"	Annular	5M	-	-
Production casing	5.500"	Annular	5M	Upper 3.5 - 5.5" VBR Lower 3.5 - 5.5" VBR	10M 10M
Open-hole	-	Blind Rams	10M	-	-

VBR = Variable Bore Ram

EOG Resources
11” 10M PSI BOP Stack

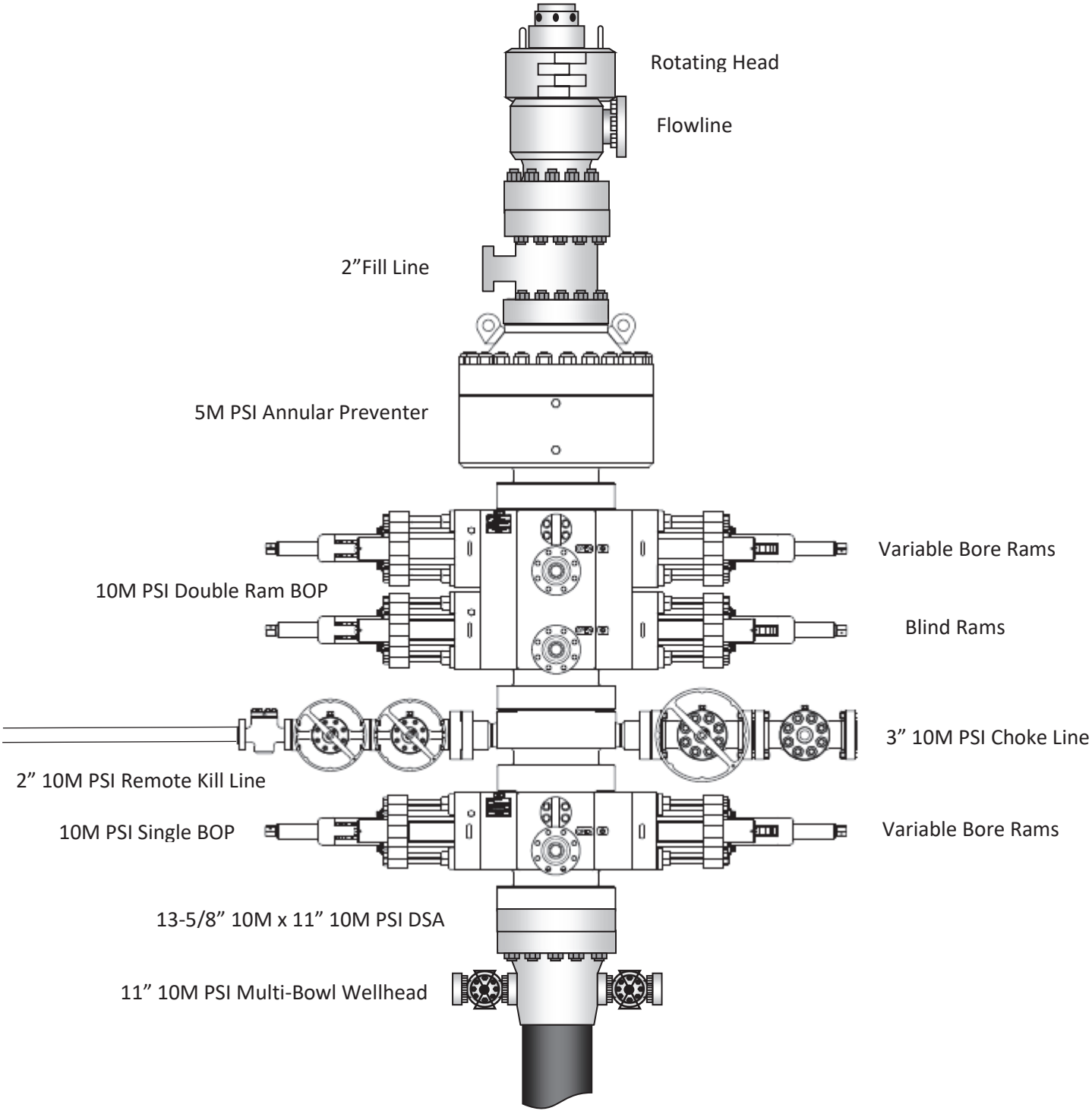

2. Well Control Procedures

Below are the minimal high-level tasks prescribed to assure a proper shut-in while drilling, tripping, running casing, pipe out of the hole (open hole), and moving the BHA through the BOPs. At least one well control drill will be performed weekly per crew to demonstrate compliance with the procedure and well control plan. The well control drill will be recorded in the daily drilling log. The type of drill will be determined by the ongoing operations, but reasonable attempts will be made to vary the type of drill conducted (pit, trip, open hole, choke, etc.). This well control plan will be available for review by rig personnel in the EOG Resources drilling supervisor's office on location, and on the rig floor. All BOP equipment will be tested as per Onshore O&G Order No. 2 with the exception of the 5000 psi annular which will be tested to 100% of its RWP.

General Procedure While Drilling

1. Sound alarm (alert crew)
2. Space out drill string
3. Shut down pumps (stop pumps and rotary)
4. Shut-in Well (uppermost applicable BOP, typically annular preventer first. HCR and choke will already be in the closed position.)
5. Confirm shut-in
6. Notify toolpusher/company representative
7. Read and record the following:
    a. SIDPP and SICP
    b. Pit gain
    c. Time
8. Regroup and identify forward plan
9. If pressure has built or is anticipated during the kill to reach 70% or greater of the RWP of the annular preventer, confirm spacing and close the upper variable bore rams.

General Procedure While Tripping

1. Sound alarm (alert crew)
2. Stab full opening safety valve and close
3. Space out drill string
4. Shut-in (uppermost applicable BOP, typically annular preventer first. HCR and choke will already be in the closed position.)
5. Confirm shut-in
6. Notify toolpusher/company representative
7. Read and record the following:
    a. SIDPP and SICP
    b. Pit gain
    c. Time
8. Regroup and identify forward plan
9. If pressure has built or is anticipated during the kill to reach 70% or greater of the RWP of the annular preventer, confirm spacing and close the upper variable bore rams.

General Procedure While Running Production Casing

1. Sound alarm (alert crew)
2. Stab crossover and full opening safety valve and close
3. Space out string

4. Shut-in (uppermost applicable BOP, typically annular preventer first. HCR and choke will already be in the closed position.)
5. Confirm shut-in
6. Notify toolpusher/company representative
7. Read and record the following:
    a. SIDPP and SICP
    b. Pit gain
    c. Time
8. Regroup and identify forward plan
9. If pressure has built or is anticipated during the kill to reach 70% or greater of the RWP of the annular preventer, confirm spacing and close the upper variable bore rams.

General Procedure With No Pipe In Hole (Open Hole)

1. Sound alarm (alert crew)
2. Shut-in with blind rams. (HCR and choke will already be in the closed position.)
3. Confirm shut-in
4. Notify toolpusher/company representative
5. Read and record the following:
    a. SICP
    b. Pit gain
    c. Time
6. Regroup and identify forward plan

General Procedures While Pulling BHA thru Stack

1. PRIOR to pulling last joint of drillpipe thru the stack.
    a. Perform flowcheck, if flowing:
    b. Sound alarm (alert crew)
    c. Stab full opening safety valve and close
    d. Space out drill string with tool joint just beneath the upper variable bore rams.
    e. Shut-in using upper variable bore rams. (HCR and choke will already be in the closed position.)
    f. Confirm shut-in
    g. Notify toolpusher/company representative
    h. Read and record the following:
        i. SIDPP and SICP
        ii. Pit gain
        iii. Time
    i. Regroup and identify forward plan

2. With BHA in the stack and compatible ram preventer and pipe combo immediately available.
    a. Sound alarm (alert crew)
    b. Stab crossover and full opening safety valve and close
    c. Space out drill string with upset just beneath the upper variable bore rams.
    d. Shut-in using upper variable bore rams. (HCR and choke will already be in the closed position.)
    e. Confirm shut-in
    f. Notify toolpusher/company representative
    g. Read and record the following:
        i. SIDPP and SICP

ii. Pit gain
iii. Time

h. Regroup and identify forward plan

3. With BHA in the stack and NO compatible ram preventer and pipe combo immediately available.
   a. Sound alarm (alert crew)
   b. If possible to pick up high enough, pull string clear of the stack and follow "Open Hole" scenario.
   c. If impossible to pick up high enough to pull the string clear of the stack:
   d. Stab crossover, make up one joint/stand of drillpipe, and full opening safety valve and close
   e. Space out drill string with tooljoint just beneath the upper variable bore ram.
   f. Shut-in using upper variable bore ram. (HCR and choke will already be in the closed position.)
   g. Confirm shut-in
   h. Notify toolpusher/company representative
   i. Read and record the following:
      i. SIDPP and SICP
      ii. Pit gain
      iii. Time
   j. Regroup and identify forward plan

eog resources

Offline Intermediate Cementing Procedure 2/24/2022

Cement Program

1. No changes to the cement program will take place for offline cementing.

Summarized Operational Procedure for Intermediate Casing

1. Run casing as per normal operations. While running casing, conduct negative pressure test and confirm integrity of the float equipment back pressure valves.
    a. Float equipment is equipped with two back pressure valves rated to a minimum of 5,000 psi.
2. Land production casing on mandrel hanger through BOP.
    a. If casing is unable to be landed with a mandrel hanger, then the **casing will be cemented online**.
3. Break circulation and confirm no restrictions.
    a. Ensure no blockage of float equipment and appropriate annular returns.
    b. Perform flow check to confirm well is static.
4. Set pack-off
    a. If utilizing a fluted/ported mandrel hanger, ensure well is static on the annulus and inside the casing by filling the pipe with kill weight fluid, remove landing joint, and set annular packoff through BOP. Pressure test to 5,000 psi for 10 min.
    b. If utilizing a solid mandrel hanger, ensure well is static on the annulus and inside the casing by filling the pipe with kill weight fluid. Pressure test seals to 5,000 psi for 10 min. Remove landing joint through BOP.
5. After confirmation of both annular barriers and the two casing barriers, install TA plug and pressure test to 5,000 psi for 10 min. Notify the BLM with intent to proceed with nipple down and offline cementing.
    a. Minimum 4 hrs notice.
6. With the well secured and BLM notified, nipple down BOP and secure on hydraulic carrier or cradle.
    a. **Note, if any of the barriers fail to test, the BOP stack will not be nippled down until after the cement job has concluded and both lead and tail slurry have reached 500 psi.**
7. Skid/Walk rig off current well.
8. Confirm well is static before removing TA Plug.
    a. Cementing operations will not proceed until well is under control. (If well is not static, notify BLM and proceed to kill)
    b. Casing outlet valves will provide access to both the casing ID and annulus. Rig or third party pump truck will kill well prior to cementing.
    c. Well control plan can be seen in Section B, Well Control Procedures.
    d. If need be, rig can be moved back over well and BOP nippled back up for any further remediation.

e. Diagram for rig positioning relative to offline cementing can be seen in Figure 4.

9. Rig up return lines to take returns from wellhead to pits and rig choke.
    a. Test all connections and lines from wellhead to choke manifold to 5,000 psi high for 10 min.
    b. If either test fails, perform corrections and retest before proceeding.
    c. Return line schematics can be seen in Figure 3.
10. Remove TA Plug from the casing.
11. Install offline cement tool.
    a. Current offline cement tool schematics can be seen in Figure 1 (Cameron) and Figure 2 (Cactus).
12. Rig up cement head and cementing lines.
    a. Pressure test cement lines against cement head to 80% of casing burst for 10 min.
13. Break circulation on well to confirm no restrictions.
    a. If gas is present on circulation, well will be shut in and returns rerouted through gas buster.
    b. Max anticipated time before circulating with cement truck is 6 hrs.
14. Pump cement job as per plan.
    a. At plug bump, test casing to 0.22 psi/ft or 1500 psi, whichever is greater.
    b. If plug does not bump on calculated, shut down and wait 8 hrs or 500 psi compressive strength, whichever is greater before testing casing.
15. Confirm well is static and floats are holding after cement job.
    a. With floats holding and backside static:
        i. Remove cement head.
    b. If floats are leaking:
        i. Shut-in well and WOC (Wait on Cement) until tail slurry reaches 500 psi compressive strength and the casing is static prior to removing cement head.
    c. If there is flow on the backside:
        i. Shut in well and WOC until tail slurry reaches 500 psi compressive strength. Ensure that the casing is static prior to removing cement head.
16. Remove offline cement tool.
17. Install night cap with pressure gauge for monitoring.
18. Test night cap to 5,000 psi for 10 min.

Example Well Control Plan Content

A. Well Control Component Table

The table below, which covers the cementing of the **5M MASP (Maximum Allowable Surface Pressure) portion of the well**, outlines the well control component rating in use. This table, combined with the mud program, documents that two barriers to flow can be maintained at all times, independent of the BOP nippled up to the wellhead.

Intermediate hole section, 5M requirement

Component	RWP
Pack-off	10M
Casing Wellhead Valves	10M
Annular Wellhead Valves	5M
TA Plug	10M
Float Valves	5M
2” 1502 Lo-Torque Valves	15M

B. Well Control Procedures

Well control procedures are specific to the rig equipment and the operation at the time the kick occurs. Below are the minimal high-level tasks prescribed to assure a proper shut-in while circulating and cementing through the Offline Cement Adapter.

General Procedure While Circulating

1. Sound alarm (alert crew).
2. Shut down pumps.
3. Shut-in Well (close valves to rig pits and open valve to rig choke line. Rig choke will already be in the closed position).
4. Confirm shut-in.
5. Notify tool pusher/company representative.

6. Read and record the following:
    a. SICP (Shut in Casing Pressure) and AP (Annular Pressure)
    b. Pit gain
    c. Time
    d. Regroup and identify forward plan to continue circulating out kick via rig choke and mud/gas separator. Circulate and adjust mud density as needed to control well.

General Procedure While Cementing

1. Sound alarm (alert crew).
2. Shut down pumps.
3. Shut-in Well (close valves to rig pits and open valve to rig choke line. Rig choke will already be in the closed position).
4. Confirm shut-in.
5. Notify tool pusher/company representative.
6. Open rig choke and begin pumping again taking returns through choke manifold and mud/gas separator.
7. Continue to place cement until plug bumps.
8. At plug bump close rig choke and cement head.
9. Read and record the following
    a. SICP and AP
    b. Pit gain
    c. Time
    d. Shut-in annulus valves on wellhead

General Procedure After Cementing

1. Sound alarm (alert crew).
2. Shut-in Well (close valves to rig pits and open valve to rig choke line. Rig choke will already be in the closed position).
3. Confirm shut-in.
4. Notify tool pusher/company representative.
5. Read and record the following:
    a. SICP and AP
    b. Pit gain
    c. Time
    d. Shut-in annulus valves on wellhead

Figure 1: Cameron TA Plug and Offline Adapter Schematic

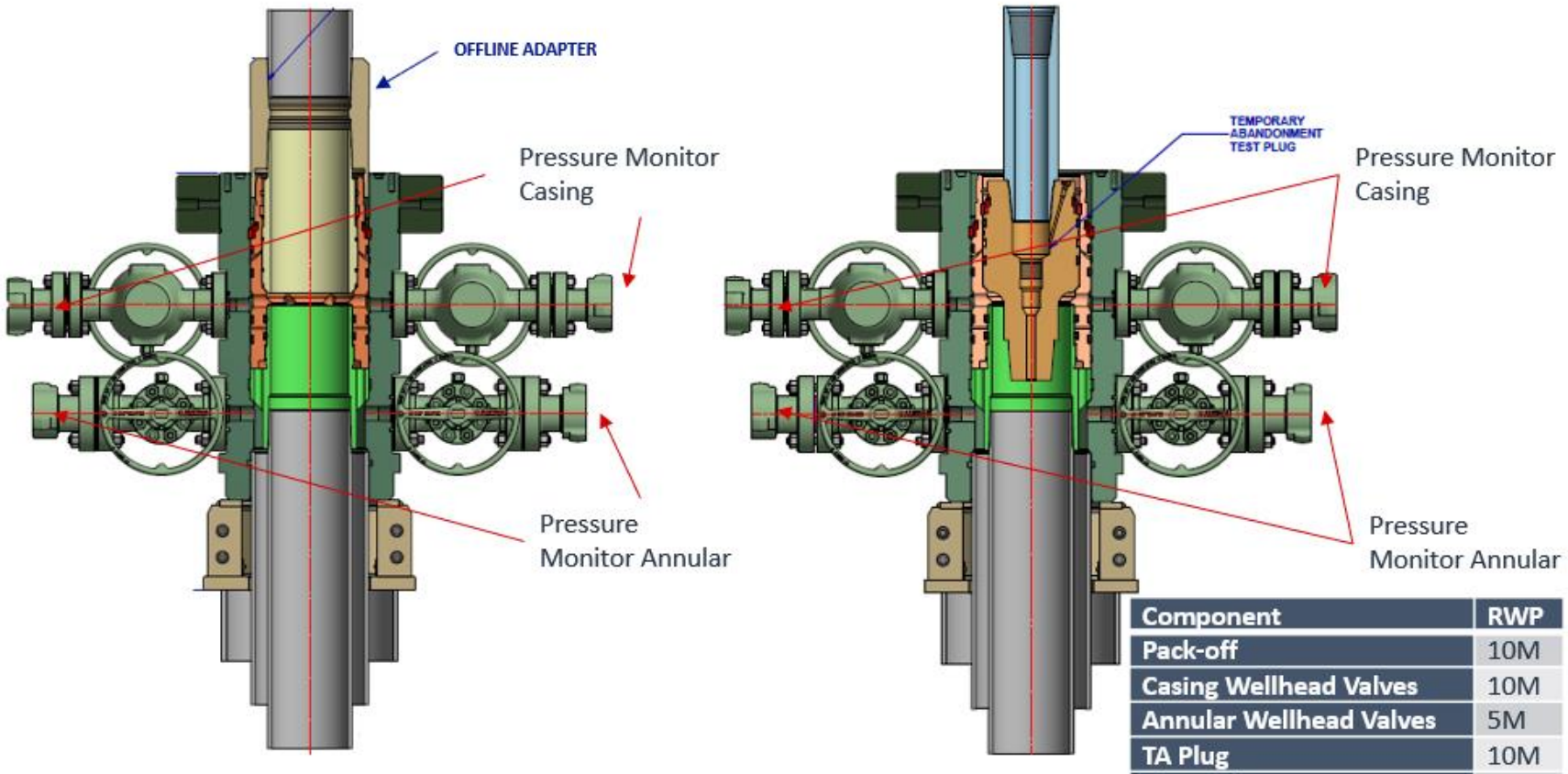

Component	RWP
Pack-off	10M
Casing Wellhead Valves	10M
Annular Wellhead Valves	5M
TA Plug	10M
Float Valves	5M
2" 1502 Lo-Torque Valves	15M

Figure 2: Cactus TA Plug and Offline Adapter Schematic

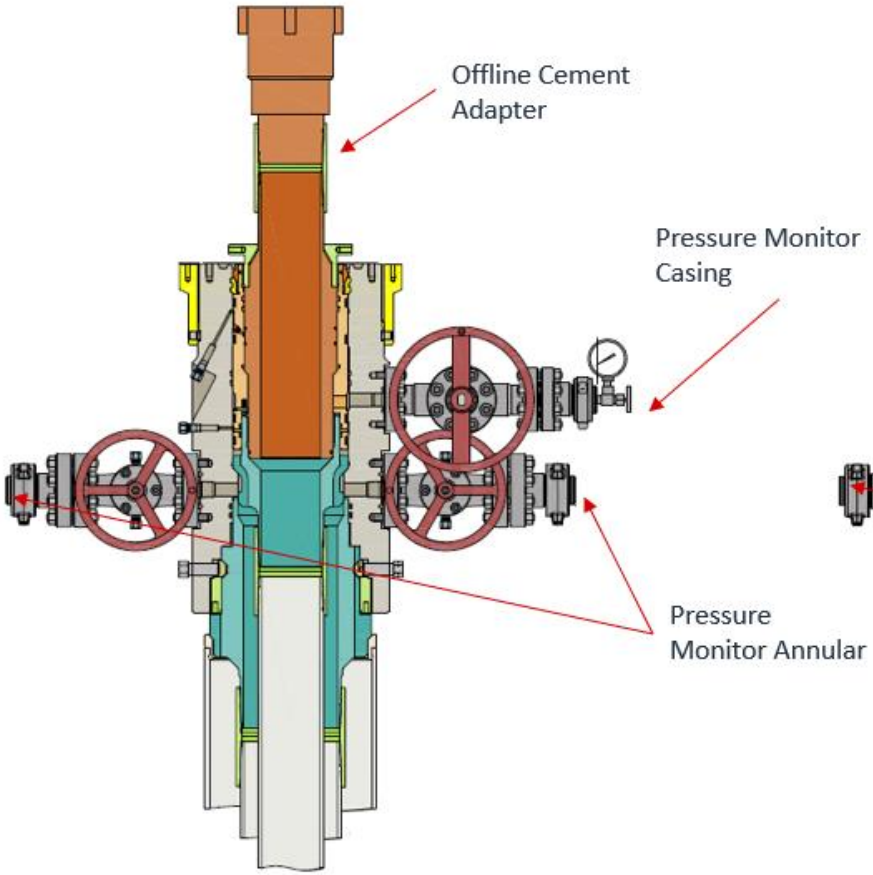

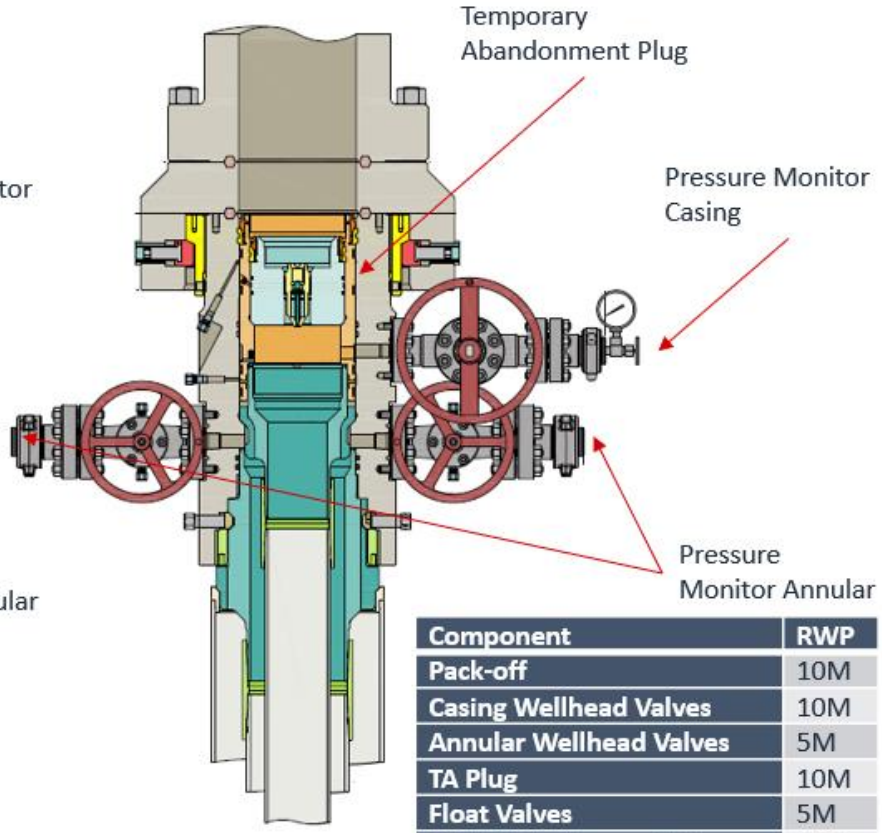

Component	RWP
Pack-off	10M
Casing Wellhead Valves	10M
Annular Wellhead Valves	5M
TA Plug	10M
Float Valves	5M
2" 1502 Lo-Torque Valves	15M

Figure 3: Back Yard Rig Up

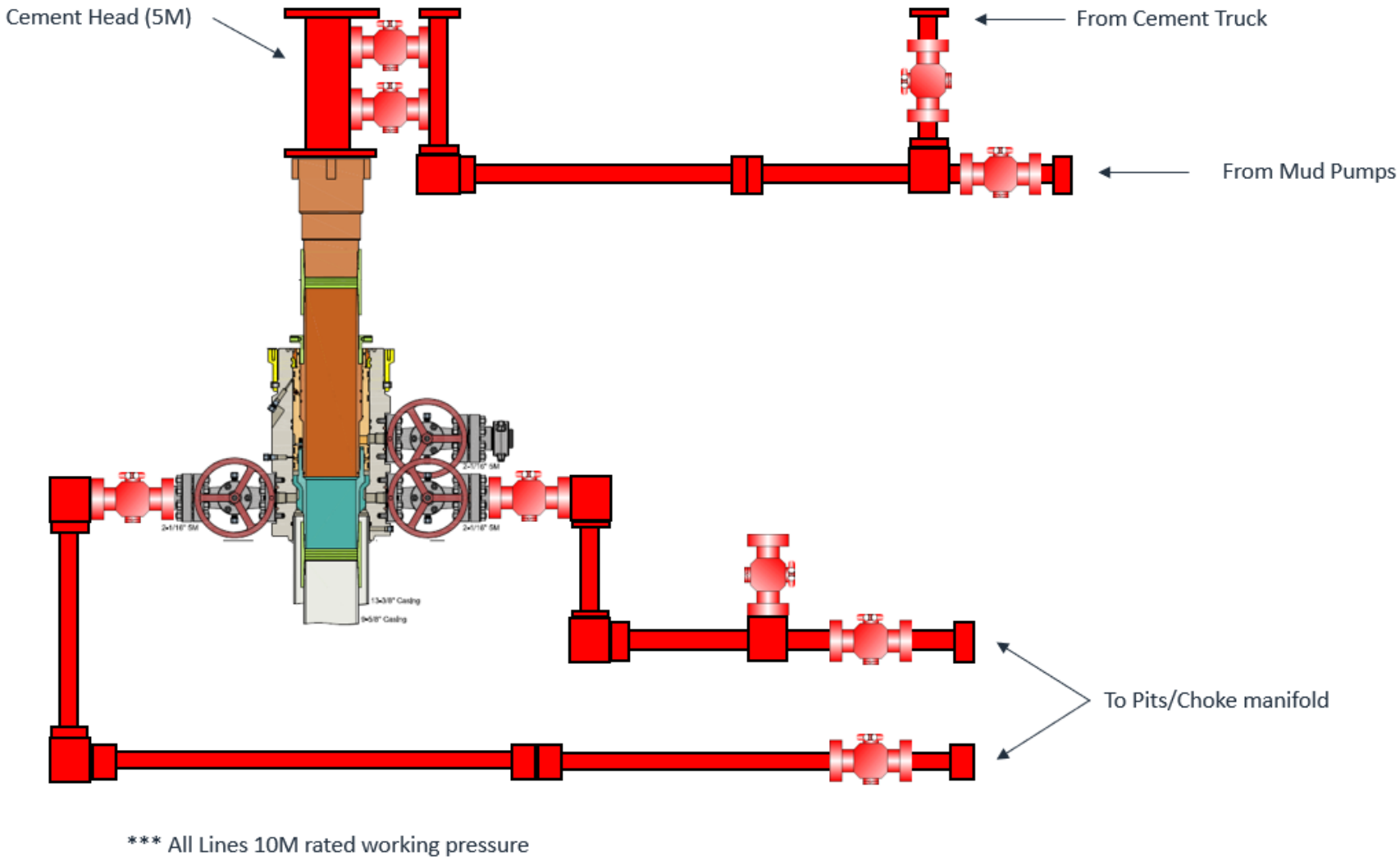

Figure 4: Rig Placement Diagram

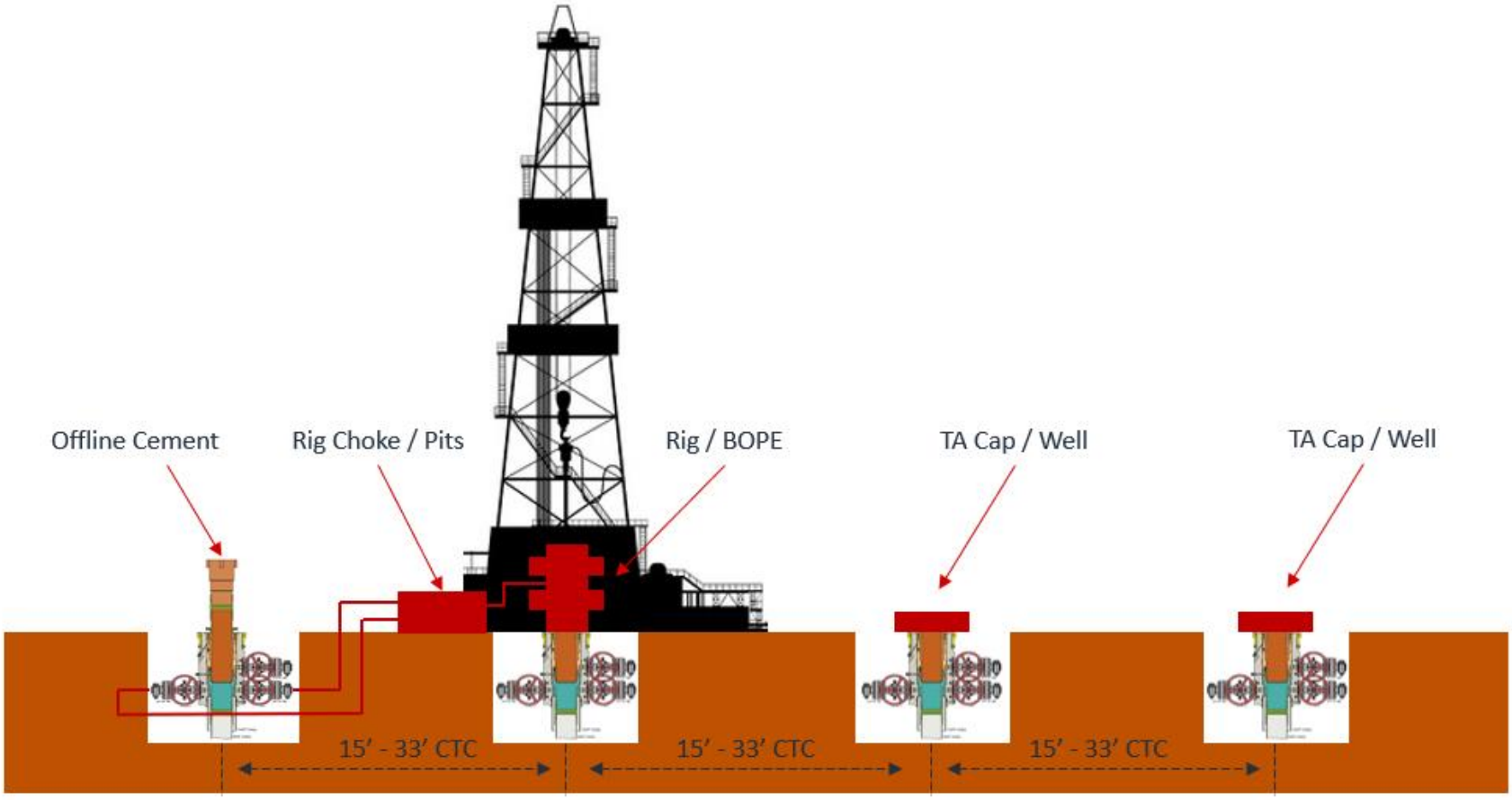

AFMSS
U.S. Department of the Interior
BUREAU OF LAND MANAGEMENT

SUPO Data Report
09/09/2026

APD ID: 10400098402
Submission Date: 05/08/2024
Operator Name: EOG RESOURCES INCORPORATED
Well Name: NEVER BETTER 14 FED COM
Well Number: 723H
Well Type: OIL WELL
Well Work Type: Drill

Highlighted data reflects the most recent changes
Show Final Text

Section 1 - Existing Roads

Will existing roads be used? YES

Existing Road Map:

EP_NEVER_BETTER_14_FED_COM_PAD_B_ACCESS_ROADS_20240507065932.pdf
2_Never_Better_14_Fed_Com_Vicinity_723H_20240507072739.pdf

Existing Road Purpose: ACCESS
Row(s) Exist? NO

ROW ID(s)

ID:

Do the existing roads need to be improved? NO

Existing Road Improvement Description:

Existing Road Improvement Attachment:

Section 2 - New or Reconstructed Access Roads

Will new roads be needed? YES

New Road Map:

EP_NEVER_BETTER_14_FED_COM_CTB_700_ACCESS_ROAD_20240203_20240506084758.pdf
EP_NEVER_BETTER_14_FED_COM_PAD_B_ACCESS_ROADS_20240507065954.pdf

New road type: RESOURCE

Length: 2111 Feet **Width (ft.):** 30

Max slope (%): 2 **Max grade (%):** 6

Army Corp of Engineers (ACOE) permit required? N

ACOE Permit Number(s):

New road travel width: 24

New road access erosion control: Newly constructed or reconstructed roads will be constructed as outlined in the BLM " Gold Book " and to meet the standards of the anticipated traffic flow and all anticipated weather requirements as needed. Construction will include diching, draining, crowning and capping or sloping and dipping the roadbed as necessary to provide a well-constructed and safe road.

New road access plan or profile prepared? N

Operator Name: EOG RESOURCES INCORPORATED

Well Name: NEVER BETTER 14 FED COM **Well Number:** 723H

New road access plan

Access road engineering design? N

Access road engineering design

Turnout? N

Access surfacing type: OTHER

Access topsoil source: OFFSITE

Access surfacing type description: 6" compacted caliche

Access onsite topsoil source depth:

Offsite topsoil source description: See attached SUPO

Onsite topsoil removal process:

Access other construction information:

Access miscellaneous information:

Number of access turnouts:

Access turnout map:

Drainage Control

New road drainage crossing: OTHER

Other Description: Crown and ditched

Drainage Control comments: N/A

Road Drainage Control Structures (DCS) description: N/A

Road Drainage Control Structures (DCS) attachment:

Access Additional Attachments

Section 3 - Location of Existing Wells

Existing Wells Map? YES

Existing Well map Attachment:

3_Never_Better_14_Fed_Com_Radius_723H_20240507072810.pdf

Section 4 - Location of Existing and/or Proposed Production Facilities

Submit or defer a Proposed Production Facilities plan? SUBMIT

Production Facilities description: SECTION 24, TOWNSHIP 24-S, RANGE 31-E, N.M.P.M.

Production Facilities map:

Operator Name: EOG RESOURCES INCORPORATED

Well Name: NEVER BETTER 14 FED COM **Well Number:** 723H

EOG_NEVER_BETTER_14_FED_COM_FLOWLINE_DETAIL_EXHIBIT_5_R1_20240306_20240506084905.pdf
EP_NEVER_BETTER_14_FED_COM_PAD_B_722H_723H_503H_504H_583H_505H_FL_20240507070028.pdf
EP_NEVER_BETTER_TO_AIR_BISCUIT_GAS_LINE_SEC15_R1_20240506084906.pdf
EP_NEVER_BETTER_TO_AIR_BISCUIT_GAS_LINE_SEC16_R1_20240506084905.pdf
EP_NEVER_BETTER_TO_AIR_BISCUIT_LGL_LINE_SEC15_R1_20240506084905.pdf
EP_NEVER_BETTER_TO_AIR_BISCUIT_LGL_LINE_SEC16_R1_20240506084906.pdf
EP_NEVER_BETTER_TO_AIR_BISCUIT_OHE_LINE_SEC14_20240506084906.pdf
EP_NEVER_BETTER_TO_AIR_BISCUIT_OIL_LINE_SEC15_R1_20240506084906.pdf
EP_NEVER_BETTER_TO_AIR_BISCUIT_OIL_LINE_SEC16_R1_20240506084906.pdf

Section 5 - Location and Types of Water Supply

Water Source Table

Water source type: RECYCLED

Water source use type: OTHER

Describe use type: The source and location of the wat
location will be drilled using a combination of water muc
program. (i) Water will be obtained from commercial wa
to the location by trucks using existing and proposed ro
attached. (ii) Water may be supplied from frac ponds an
temporary above-ground surface lines a shown on the r
4-inch polyethylene or layflat lines and up to six 12-inch
water. Freshwater is defined as containing less than 10,
(TDS), exhibiting no petroleum sheen when standing, a
mechanical processes that expose it to heavy metals or
to utilize up to six 4-inch polyethylene or layflat lines an
transport treated produced water is defined as the recor
reusable form and may include mechanical and chemica
RESOLUTE PIT, SECTION 24, TOWNSHIP 25 SOUTH
Produced Water Source: VALIANT RISER, SECTION 1
32 EAST Temporary surface lines would originate from
locations in the surrounding area of the proposed action
ground with minimal disturbance. Temporary surface lin
feet from the edge of the existing disturbance (i.e., edge
or two-track road, or other man-made addition to the lar
mechanism will be used. All vehicle equipment will rema
Map or maps showing the locations of the temporary su
APD and included in the Environmental Assessment. A
KMZ file) shall be submitted with the Environmental Ass

Source latitude:

Source longitude:

Source datum:

City:

Water source permit type: WATER RIGHT

Water source transport method: PIPELINE

TRUCKING

Operator Name: EOG RESOURCES INCORPORATED

Well Name: NEVER BETTER 14 FED COM **Well Number:** 723H

Source land ownership: FEDERAL

Source transportation land ownership: FEDERAL

Water source volume (barrels): 1 **Source volume (acre-feet):** 0.00012889

Source volume (gal): 42

Water source and transportation

EP_NEVER_BETTER_TO_AIR_BISCUIT_WATER_LINE_SEC15_R1_20240506084958.pdf
EP_NEVER_BETTER_TO_AIR_BISCUIT_WATER_LINE_SEC16_R1_20240506084958.pdf
Never_Better_14_Fed_Com_Water_Map_20240506084958.pdf

Water source comments: SEE SUPO

New water well? N

New Water Well Info

Well latitude: **Well Longitude:** **Well datum:**

Well target aquifer:

Est. depth to top of aquifer(ft): **Est thickness of aquifer:**

Aquifer comments:

Aquifer documentation:

Well depth (ft): **Well casing type:**

Well casing outside diameter (in.): **Well casing inside diameter (in.):**

New water well casing? **Used casing source:**

Drilling method: **Drill material:**

Grout material: **Grout depth:**

Casing length (ft.): **Casing top depth (ft.):**

Well Production type: **Completion Method:**

Water well additional information:

State appropriation permit:

Additional information attachment:

Section 6 - Construction Materials

Using any construction materials: YES

Construction Materials description: Caliche will be supplied from pits shown on the attached caliche source map. Caliche utilized for the drilling pad will be obtained either from an existing approved mineral pit, or by benching into a hill, which will allow the pad to be level with existing caliche from the cut, or extracted by Flipping the well location. A mineral material permit will be obtained from BLM prior to excavating any caliche on Federal Lands. Amount will vary for each pad. The procedure for Flipping a well location is as follows: * -An adequate amount of topsoil/root zone (usually top 6 inches of soil) will be stripped from the proposed well location and stockpiled along the side of the well location as depicted on the well site diagram/survey plat. -An area will be used within the proposed well site dimensions to excavate caliche.

Operator Name: EOG RESOURCES INCORPORATED

Well Name: NEVER BETTER 14 FED COM **Well Number:** 723H

Subsoil will be removed and stockpiled within the surveyed well pad dimensions. -Once caliche/surfacing mineral is found, the mineral material will be excavated and stockpiled within the approved drilling pad dimensions. -Then, subsoil will be pushed back in the excavated hole and caliche will be spread accordingly across the entire well pad and road (if available). -Neither caliche nor subsoil will be stockpiled outside the well pad dimensions. Topsoil will be stockpiled along the edge of the pad as depicted in the Well Site Layout or survey plat. * If no caliche is found onsite, caliche will be hauled in from a BLM-approved caliche pit or other established mineral pit. A BLM mineral material permit will be acquired before obtaining mineral material from BLM pits or federal land.

Construction Materials source location

Never_Better_14_Fed_Com_Caliche_Map_20240506085011.pdf

Section 7 - Methods for Handling

Waste type: GARBAGE

Waste content description: trash generated by onsite personnel

Amount of waste: 1 pounds

Waste disposal frequency : Weekly

Safe containment description: Trash dumpsters are utilized to contain garbage onsite. Dumpsters are maintained by a third party vendor. All trash is hauled to Lee County landfill.
Safe containmant attachment:

Waste disposal type: OTHER **Disposal location ownership:** OTHER

Disposal type description: LEE COUNTY LANDFILL

Disposal location description: LEE COUNTY LANDFILL

Waste type: SEWAGE

Waste content description: Human grey water waste

Amount of waste: 1 barrels

Waste disposal frequency : Weekly

<style isBold="true">Safe containment description:</style> Safe containment description: Human waste managed by third-party vendors. ROW construction waste contained in on-site portable toilets maintained by third party ve ndor. During drilling activities waste is managed by third party vendor utilizing onsite aerobic (treatment) wastewater management. Liquids treated through the aerobic system are transferred to via water l ine to CTBs for reuse by EOG. All solid waste remaining after treatment process are pumped into an enclosed waste transfer truck at the time of rig down and taken to one of the following disposal facilities by the thi rd party vendor: Qual Run Services LLC (a Licensed Waste Management Service Facility in Reeves County, Tex as) or ReUse OilField Services (a Licensed Waste Management Facility in Mentone, TX)
Safe containmant attachment:

Waste disposal type: HAUL TO COMMERCIAL FACILITY **Disposal location ownership:** COMMERCIAL
Disposal type description:

<style isBold="true">Disposal location description:</style> Disposal location description: Human waste managed by third-party vendors. ROW construction waste contained in on-site portable toilets maintained by third party ve ndor. During drilling activities waste is managed by third party vendor utilizing onsite aerobic (treatment) wastewater management. Liquids treated through the aerobic system are transferred to via water l ine to CTBs for reuse by EOG. All solid waste remaining after treatment process are pumped into an enclosed waste transfer truck at the time of rig down and taken to one of the following disposal facilities by

Operator Name: EOG RESOURCES INCORPORATED

Well Name: NEVER BETTER 14 FED COM **Well Number:** 723H

the thi rd party vendor: Qual Run Services LLC (a Licensed Waste Management Service Facility in Reeves County, Tex as) or ReUse OilField Services (a Licensed Waste Management Facility in Mentone, TX)

Waste type: DRILLING

Waste content description: Drill fluids and produced oil and water from the well during drilling and completion operations will be stored safely and disposed of properly in an NMOCD approved disposal facility. Garbage and trash produced during drilling and completion operations will be collected in a trash container and disposed of properly. Human waste and grey water will be properly contained of and disposed of properly. After drilling and completion operations; trash, chemicals, salts, frac sand, and other waste material will be removed and disposed of properly at a state approved disposal facility.

Amount of waste: 0 barrels

Waste disposal frequency : Daily

Safe containment description: STEEL TANKS

Safe containmant attachment:

Waste disposal type: HAUL TO COMMERCIAL FACILITY **Disposal location ownership:** COMMERCIAL

Disposal type description:

Disposal location description: TRUCKED TO NMOCD APPROVED DISPOSAL FACILITY

Reserve Pit

Reserve Pit being used? NO

Temporary disposal of produced water into reserve pit? NO

Reserve pit length (ft.) **Reserve pit width (ft.)**

Reserve pit depth (ft.) **Reserve pit volume (cu. yd.)**

Is at least 50% of the reserve pit in cut?

Reserve pit liner

Reserve pit liner specifications and installation description

Cuttings Area

Cuttings Area being used? NO

Are you storing cuttings on location? Y

Description of cuttings location Closed Loop System. Drill cuttings will be disposed of into steel tanks and taken to an NMOCD approved disposal facility.

Cuttings area length (ft.) **Cuttings area width (ft.)**

Cuttings area depth (ft.) **Cuttings area volume (cu. yd.)**

Is at least 50% of the cuttings area in cut?

Cuttings area liner

Cuttings area liner specifications and installation description

Operator Name: EOG RESOURCES INCORPORATED

Well Name: NEVER BETTER 14 FED COM **Well Number:** 723H

Section 8 - Ancillary

Are you requesting any Ancillary Facilities?: N

Ancillary Facilities

Comments:

Section 9 - Well Site

Well Site Layout Diagram:

6_Never_Better_14_Fed_Com_Padsite_723H_2_20240507072915.pdf
Never_Better_14_Fed_Com_723H_Rig_Layout_20240507072915.pdf
4_Never_Better_14_Fed_Com_WLE_723H_20240507072915.pdf
Comments: Exhibit 2A-Wellsite, Exhibit 2B-Padsite, Exhibit 4-Rig Layout

Section 10 - Plans for Surface

Type of disturbance: New Surface Disturbance **Multiple Well Pad Name:** NEVER BETTER 14 FED COM

Multiple Well Pad Number: 722H, 723H

Recontouring

7_Never_Better_14_Fed_Com_Reclamation_Diagram_723H_20240507072932.pdf

Drainage/Erosion control construction: Proper erosion control methods will be used on the area to control erosion, runoff, and siltation of the surrounding area.
Drainage/Erosion control reclamation: The interim reclamation will be monitored periodically to ensure that vegetation has reestablished and that erosion is controlled.

Well pad proposed disturbance (acres): 0	**Well pad interim reclamation (acres):** 0	**Well pad long term disturbance (acres):** 0
Road proposed disturbance (acres): 0	**Road interim reclamation (acres):** 0	**Road long term disturbance (acres):** 0
Powerline proposed disturbance (acres): 0	**Powerline interim reclamation (acres):** 0	**Powerline long term disturbance (acres):** 0
Pipeline proposed disturbance (acres): 0	**Pipeline interim reclamation (acres):** 0	**Pipeline long term disturbance (acres):** 0
Other proposed disturbance (acres): 0	**Other interim reclamation (acres):** 0	**Other long term disturbance (acres):** 0
Total proposed disturbance: 0	**Total interim reclamation:** 0	**Total long term disturbance:** 0

Disturbance Comments: All Interim and Final reclamation must be within 6 months. Interim must be within 6 months of completion and final within 6 months of abandonment plugging. Dual pad operations may alter timing.

Reconstruction method: In areas planned for interim reclamation, all the surfacing material will be removed and returned to the original mineral pit or recycled to repair or build roads and well pads. Areas planned for interim reclamation will be recontoured to the original contour if feasible, or if not feasible, to an interim contour that blends with the surrounding topography as much as possible. Where applicable, the fill

Operator Name: EOG RESOURCES INCORPORATED

Well Name: NEVER BETTER 14 FED COM **Well Number:** 723H

material of the well pad will be backfilled into the cut to bring the area back to the original contour. The interim cut and fill slopes prior to re-seeding will not be steeper than a 3:1 ratio, unless the adjacent native topography is steeper. Note: Constructed slopes may be much steeper during drilling, but will be recontoured to the above ratios during interim reclamation.
Topsoil redistribution: Topsoil will be evenly respread and aggressively revegetated over the entire disturbed area not needed for all-weather operations including cuts and fills. To seed the area, the proper BLM seed mixture, free of noxious weeds, will be used. Final seedbed preparation will consist of contour cultivating to a depth of 4 to 6 inches within 24 hours prior to seeding, dozer tracking, or other imprinting in order to break the soil crust and create seed germination micro-sites.

Soil treatment: Re-seed according to BLM standards. All reclaimed areas will be monitored periodically to ensure that revegetation occurs, that the area is not redisturbed, and that erosion is controlled.
Existing Vegetation at the well pad: Grass, forbs, and small woody vegetation, such as mesquite will be excavated as the topsoil is removed. Large woody vegetation will be stripped and stored separately and respreads evenly on the site following topsoil respreading. Topsoil depth is defined as the top layer of soil that contains 80% of the roots. In areas to be heavily disturbed, the top 6 inches of soil material, will be stripped and stockpiled on the perimeter of the well location and along the perimeter of the access road to control run-on and run-off, to keep topsoil viable, and to make redistribution of topsoil more efficient during interim reclamation. Stockpiled topsoil should include vegetative material. Topsoil will be clearly segregated and stored separately from subsoils.

Existing Vegetation at the well pad

Existing Vegetation Community at the road: All disturbed areas, including roads, pipelines, pads, will be recontoured to the contour existing prior to the initial construction or a contour that blends indistinguishably with the surrounding landscape. Topsoil that was spread over the interim reclamation areas will be stockpiled prior to recontouring. The topsoil will be redistributed evenly over the entire disturbed site to ensure successful revegetation.

Existing Vegetation Community at the road

Existing Vegetation Community at the pipeline: All disturbed areas, including roads, pipelines, pads, will be recontoured to the contour existing prior to the initial construction or a contour that blends indistinguishably with the surrounding landscape. Topsoil that was spread over the interim reclamation areas will be stockpiled prior to recontouring. The topsoil will be redistributed evenly over the entire disturbed site to ensure successful revegetation.

Existing Vegetation Community at the pipeline

Existing Vegetation Community at other disturbances: All disturbed areas, including roads, pipelines, pads, will be recontoured to the contour existing prior to the initial construction or a contour that blends indistinguishably with the surrounding landscape. Topsoil that was spread over the interim reclamation areas will be stockpiled prior to recontouring. The topsoil will be redistributed evenly over the entire disturbed site to ensure successful revegetation.

Existing Vegetation Community at other disturbances

Non native seed used? N

Non native seed description:

Seedling transplant description:

Will seedlings be transplanted for this project? N

Seedling transplant description attachment:

Will seed be harvested for use in site reclamation? N

Operator Name: EOG RESOURCES INCORPORATED

Well Name: NEVER BETTER 14 FED COM **Well Number:** 723H

Seed harvest description:

Seed harvest description attachment:

Seed

Seed Table

Seed Summary

Total pounds/Acre:

Seed Type	Pounds/Acre

Seed reclamation

Operator Contact/Responsible Official

First Name: **Last Name:**

Phone: **Email:**

Seedbed prep:

Seed BMP:

Seed method:

Existing invasive species? N

Existing invasive species treatment description:

Existing invasive species treatment

Weed treatment plan description: All reclaimed areas will be monitored periodically to ensure that revegetation occurs, that the area is not redisturbed, erosion is controlled, and free of noxious weeds. Weeds will be treated if found.

Weed treatment plan

Monitoring plan description: Reclamation will be completed within 6 months of well plugging. All reclaimed areas will be monitored periodically to ensure that revegetation occurs, that the area is not redisturbed, erosion is controlled, and free of noxious weeds.

Monitoring plan

Success standards: N/A

Pit closure description: N/A

Pit closure attachment:

Section 11 - Surface

Operator Name: EOG RESOURCES INCORPORATED

Well Name: NEVER BETTER 14 FED COM **Well Number:** 723H

Disturbance type: WELL PAD

Describe:

Surface Owner: BUREAU OF LAND MANAGEMENT

Other surface owner description:

BIA Local Office:

BOR Local Office:

COE Local Office:

DOD Local Office:

NPS Local Office:

State Local Office:

Military Local Office:

USFWS Local Office:

Other Local Office:

USFS Region:

USFS Forest/Grassland: **USFS Ranger District:**

Section 12 - Other

Right of Way needed? N **Use APD as ROW?**

ROW Type(s):

ROW

SUPO Additional Information: Onsite meeting was conducted on 1/2/2024. We plan to use (6) 12-inch lay flat hoses to transport water and (6) 4-inch polylines or layflay for drilling and frac operations. The well will be produced using gas lift as the artificial lift method. Produced water will be transported via pipeline to the EOG produced water gathering system. Produced Water Gathering Sale Line: 131.1 in Sec.9 T22S R32E 1274.3 in Sec. 10 T22S R32E 2198.0 in Sec. 14 T22S R32E 8687.9 in Sec.15 T22S R32E 2429.7 in Sec. 16 T22S R32E Gas Gathering Sale Line: 251.1 in Sec.9 T22S R32E 1393.7 in Sec. 10 T22S R32E 2333.4 in Sec. 14 T22S R32E 8689.4 in Sec.15 T22S R32E 2513.6 in Sec. 16 T22S R32E Localized Gas Lift: 191.2 in Sec.9 T22S R32E 1334.0 in Sec. 10 T22S R32E 2333.2 in Sec. 14 T22S R32E 8688.6 in Sec.15 T22S R32E 2524.2 in Sec. 16 T22S R32E Crude Oil Gathering Sale Line: 71.1 in Sec.9 T22S R32E 1214.7 in Sec. 10 T22S R32E 2217.8 in Sec. 14 T22S R32E 8687.1 in Sec.15 T22S R32E 2255.3 in Sec. 16 T22S R32E Overhead Electric Line: 807.8 in Sec. 14 T22S R32E Central Tank Battery: 400X600

Operator Name: EOG RESOURCES INCORPORATED

Well Name: NEVER BETTER 14 FED COM **Well Number:** 723H

Use a previously conducted onsite? N

Previous Onsite information:

Other SUPO

1_Never_Better_14_Fed_Com_Location_723H_20240507073023.pdf
SUPO_NEVER_BETTER_14_FED_COM_723H_20240507073039.pdf

SECTION 14, TOWNSHIP 22 SOUTH, RANGE 32 EAST,
LEA COUNTY, NEW MEXICO

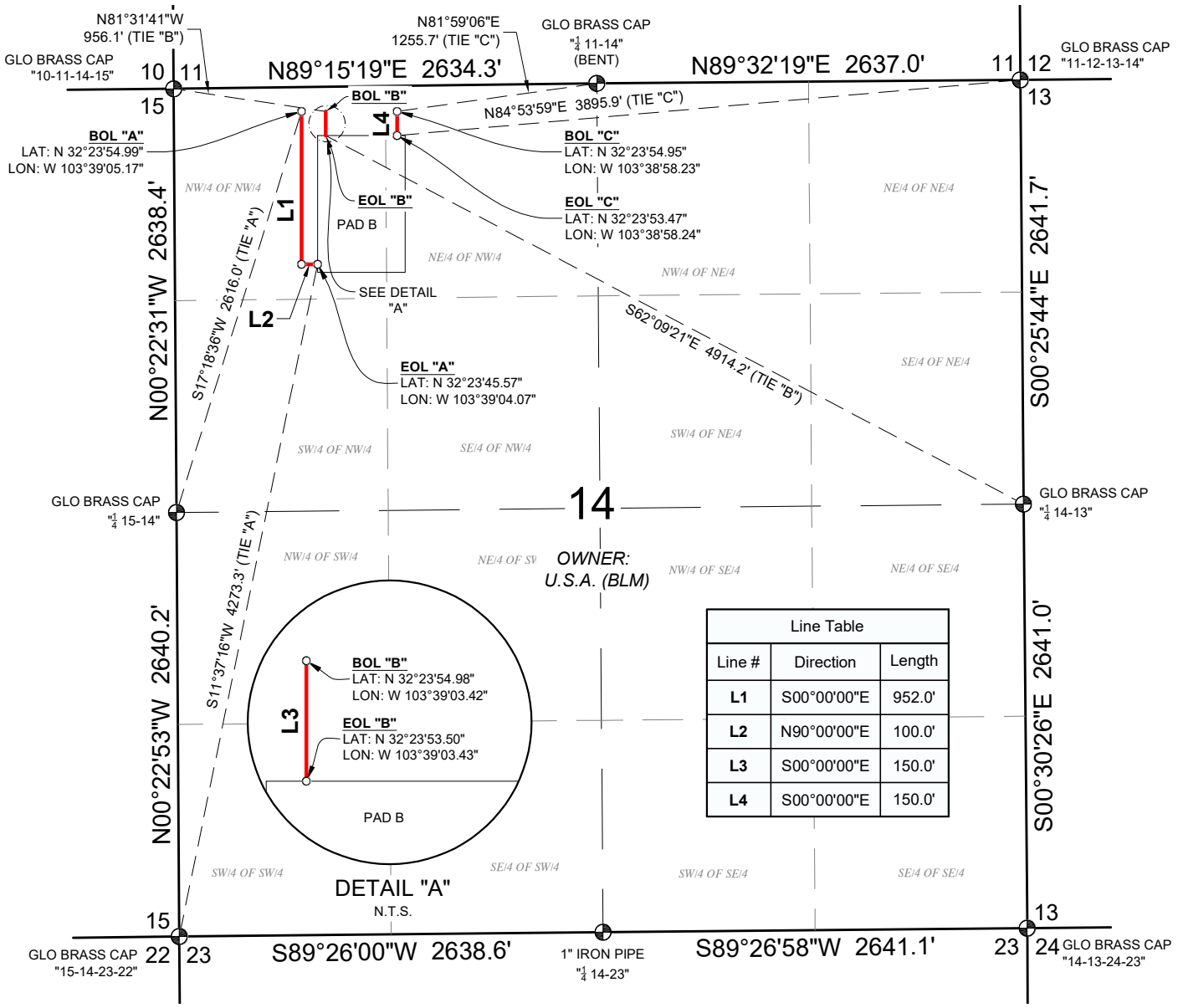

Line Table		
Line #	Direction	Length
L1	S00°00'00"E	952.0'
L2	N90°00'00"E	100.0'
L3	S00°00'00"E	150.0'
L4	S00°00'00"E	150.0'

NEVER BETTER 14 FED COM PAD B PROPOSED ACCESS ROADS

CENTERLINE DESCRIPTION

A STRIP OF LAND 30 FEET IN WIDTH AND 1352.0 FEET, 81.9 RODS OR 0.3 MILES IN LENGTH, SITUATED IN SECTION 14, TOWNSHIP 22 SOUTH, RANGE 32 EAST, N.M.P.M., LEA COUNTY, NEW MEXICO, AND BEING 15 FEET ON EACH SIDE OF THE SURVEY OF CENTERLINE AS SHOWN HEREON.

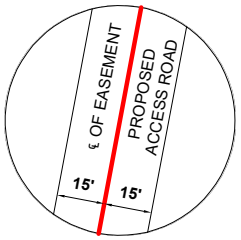

TYPICAL
RIGHT-OF-WAY EASEMENT

PROPOSED ACCESS ROADS

POINT FOR BEGIN/END OR ANGLE POINT

FOUND MONUMENT AS SHOWN

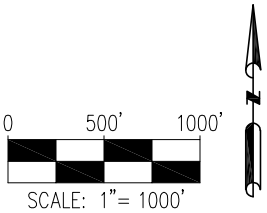

NOTES:

- BEARINGS, COORDINATES, AND DISTANCES SHOWN HEREON ARE BASED ON THE NEW MEXICO STATE PLANE COORDINATE SYSTEM, EAST ZONE, NAD 83- 2011 (EPOCH 2010) FRAMEWORK, AS DERIVED BY OPUS SOLUTION. THE ELEVATIONS SHOWN HEREON AREA BASED ON NAVD 88.
- LAND OWNERSHIP INFORMATION REFLECTED HEREON WAS PROVIDED BY CLIENT AND/OR OBTAINED FROM PUBLIC DOMAIN DATA, NO INDEPENDENT OWNERSHIP SEARCH WAS PERFORMED BY ASCENT

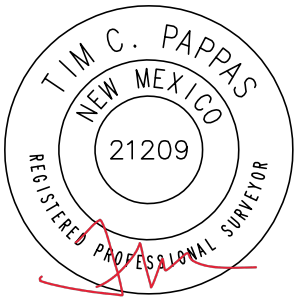

I, TIM C. PAPPAS, NEW MEXICO PROFESSIONAL SURVEYOR NO. 21209, DO HEREBY CERTIFY THAT THIS EASEMENT PLAT AND THE ACTUAL SURVEY ON THE GROUND UPON WHICH IT IS BASED WERE PERFORMED BY ME OR UNDER MY SUPERVISION; THAT I AM RESPONSIBLE FOR THIS SURVEY; THAT THIS SURVEY MEETS THE MINIMUM STANDARDS FOR SURVEYING IN NEW MEXICO; AND THAT IT IS TRUE AND CORRECT TO THE BEST OF MY KNOWLEDGE AND I FURTHER CERTIFY THAT THIS SURVEY IS NOT A LAND DIVISION OR SUBDIVISION AS DEFINED IN THE NEW MEXICO SUBDIVISION ACT AND THAT THIS INSTRUMENT IS AN EASEMENT PLAT OF A PROPOSED EASEMENT.

26 JAN 2024

TIM C. PAPPAS, N.M. P.L.S. **No.21209**

SURVEY DATE: 01/04/2024
JOB NO.: B23.EOG.0106

DRAFT:JC
SHEET: 1 OF 1

eog resources

NEVER BETTER 14 FED COM PAD B PROPOSED ACCESS ROADS
SEC. 14, T-22-S, R-32-E, N.M.P.M.,
LEA COUNTY, NEW MEXICO

PETROLEUM FIELD SERVICES, LLC
DBA: ASCENT GEOMATICS SOLUTIONS
8620 WOLFF CT.
WESTMINSTER, CO 80031
OFFICE: (303) 928-7128

PLAT: P:\EOG_B23\106\PROD\ROW_EXHIBITS\ACCESS_ROADS\EP_NEVER_BETTER_14_FED_COM_PAD_B_ACCESS_ROAD 1/26/24 12:22 PM Jcastro

EXHIBIT 2
VICINITY MAP

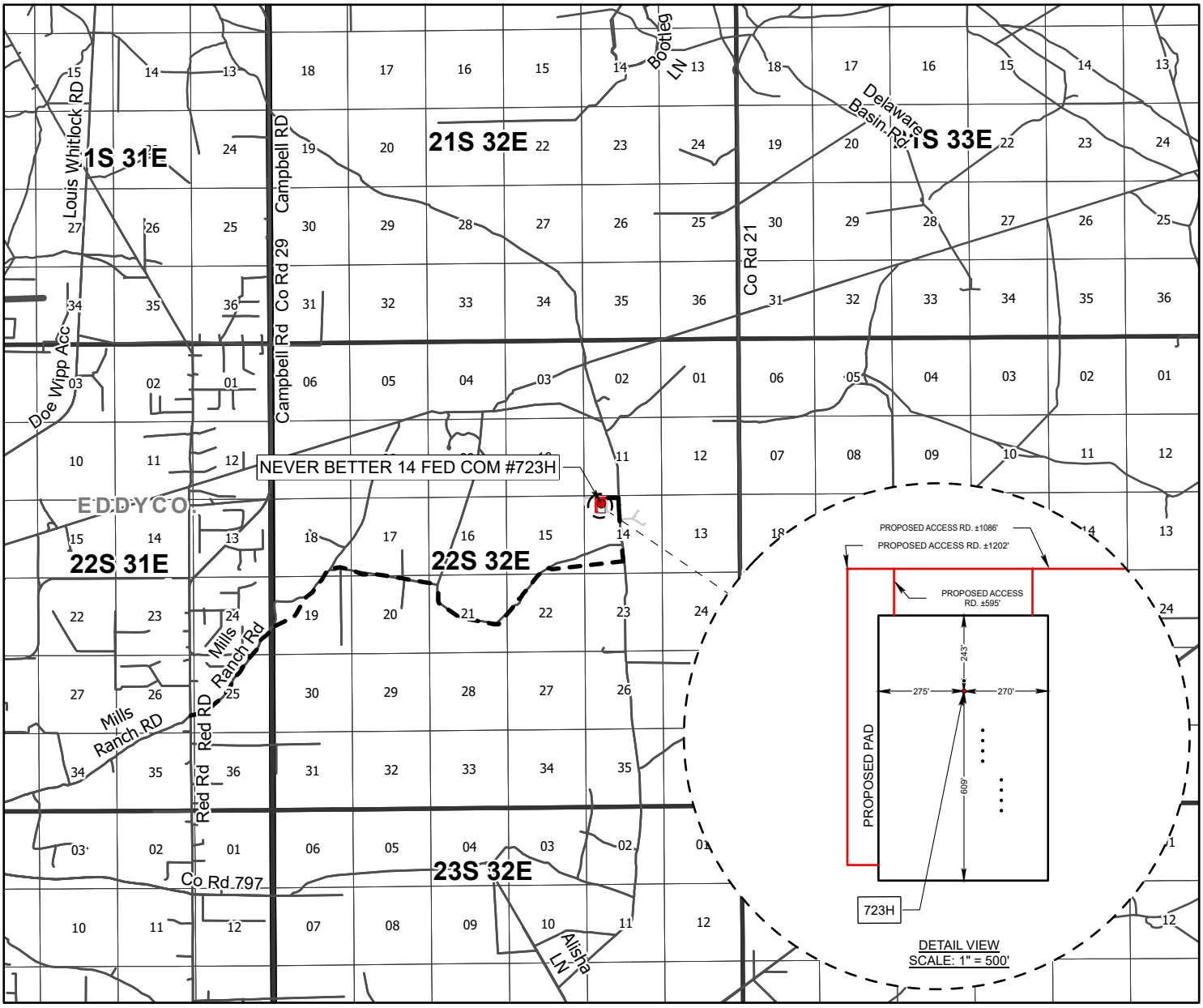

LEASE NAME & WELL NO.: NEVER BETTER 14 FED COM #723H
LATITUDE: N 32.397522 LONG: W 103.650228 ELEVATION: 3753'

SECTION: 14 TWP: 22S RGE: 32E SURVEY: N.M.P.M.
COUNTY: LEA STATE: NM

DESCRIPTION: 549' FNL & 1167' FWL

DISTANCE & DIRECTION:
FROM THE INTERSECTION OF MILLS RANCH ROAD & RED ROAD, TRAVEL NORTHEAST ON MILLS RANCH ROAD ±1.61 MILES; THENCE NORTHEAST (RIGHT) ON AN EXISTING LEASE ROAD ±2.51 MILES; THENCE SOUTH (RIGHT) ON AN EXISTING LEASE ROAD ±3.03 MILES; THENCE NORTH (LEFT) ON AN EXISTING LEASE ROAD ±0.82 MILES; THENCE WEST (LEFT) ON PROPOSED ACCESS ROAD ±936 FEET; THENCE SOUTH (LEFT) ON PROPOSED ACCESS ROAD ±150 FEET TO THE EDGE OF THE PAD.
(PROPOSED ACCESS ROAD LENGTH = ±1086')

- Proposed Well
- Proposed Access Road
- Proposed Pad
- Road
- Section
- Township

N

0 1 2

SCALE: 1"=2 MI.

eog resources

JOB No.: EOG__B230106

NOTE:
ALL BEARINGS, DISTANCES, AND COORDINATE VALUES CONTAINED HEREIN ARE GRID BASED UPON THE FOLLOWING COORDINATE SYSTEM: NAD83 NEW MEXICO STATE PLANE, EAST ZONE, U.S. SURVEY FEET

DISCLAIMER:
THIS PLOT DOES NOT REPRESENT A MONUMENTED LAND SURVEY AND SHOULD NOT BE RELIED UPON TO DETERMINE BOUNDARY LINES, PROPERTY OWNERSHIP OR OTHER PROPERTY INTERESTS.

ASCENT GEOMATICS SOLUTIONS
8620 WOLFF COURT
WESTMINSTER, CO 80031
OFFICE: (303) 928-7128
WWW.ASCENTGEOMATICS.COM

C:\GIS\Projects\EOG\PRO\VicinityMaps\VicinityMaps 1/26/2024 4:05 PM

SECTION 14, TOWNSHIP 22 SOUTH, RANGE 32 EAST,
LEA COUNTY, NEW MEXICO

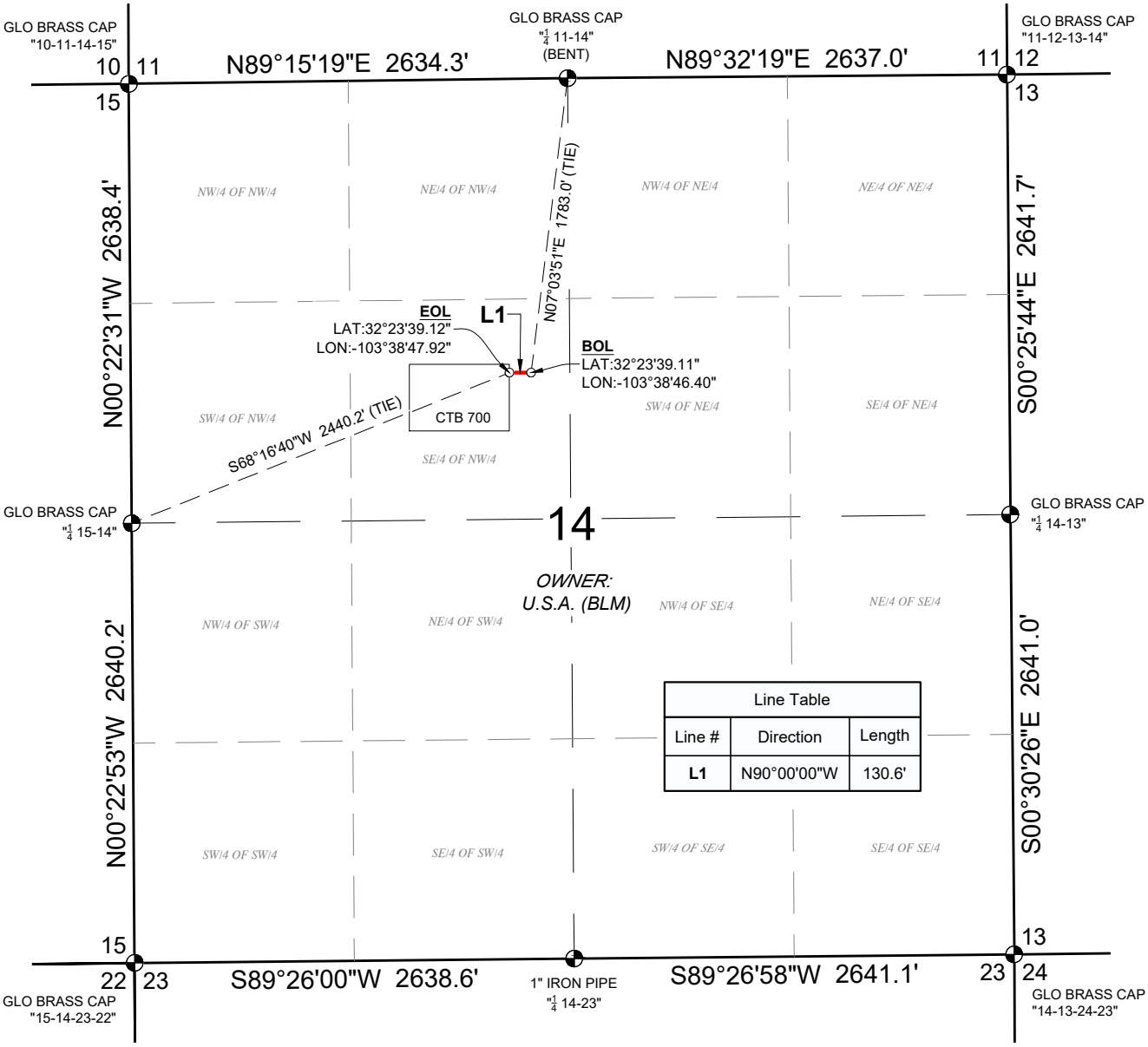

Line Table		
Line #	Direction	Length
L1	N90°00'00"W	130.6'

NEVER BETTER 14 FED COM CTB 700 PROPOSED ACCESS ROAD
CENTERLINE DESCRIPTION

A STRIP OF LAND 30 FEET IN WIDTH AND 130.6 FEET, 7.9 RODS OR 0.02 MILES IN LENGTH, SITUATED IN SECTION 14, TOWNSHIP 22 SOUTH, RANGE 32 EAST, N.M.P.M., LEA COUNTY, NEW MEXICO, AND BEING 15 FEET ON EACH SIDE OF THE SURVEY OF CENTERLINE AS SHOWN HEREON.

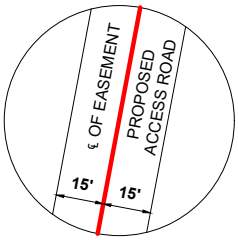

TYPICAL
RIGHT-OF-WAY EASEMENT

- PROPOSED ACCESS ROAD
- POINT FOR BEGIN/END OR ANGLE POINT
- FOUND MONUMENT AS SHOWN

0 500' 1000'
SCALE: 1"= 1000'

NOTES:
- BEARINGS, COORDINATES, AND DISTANCES SHOWN HEREON ARE BASED ON THE NEW MEXICO STATE PLANE COORDINATE SYSTEM, EAST ZONE, NAD 83- 2011 (EPOCH 2010) FRAMEWORK, AS DERIVED BY OPUS SOLUTION. THE ELEVATIONS SHOWN HEREON AREA BASED ON NAVD 88.
- LAND OWNERSHIP INFORMATION REFLECTED HEREON WAS PROVIDED BY CLIENT AND/OR OBTAINED FROM PUBLIC DOMAIN DATA, NO INDEPENDENT OWNERSHIP SEARCH WAS PERFORMED BY ASCENT



I, TIM C. PAPPAS, NEW MEXICO PROFESSIONAL SURVEYOR NO. 21209, DO HEREBY CERTIFY THAT THIS EASEMENT PLAT AND THE ACTUAL SURVEY ON THE GROUND UPON WHICH IT IS BASED WERE PERFORMED BY ME OR UNDER MY SUPERVISION; THAT I AM RESPONSIBLE FOR THIS SURVEY; THAT THIS SURVEY MEETS THE MINIMUM STANDARDS FOR SURVEYING IN NEW MEXICO; AND THAT IT IS TRUE AND CORRECT TO THE BEST OF MY KNOWLEDGE AND I FURTHER CERTIFY THAT THIS SURVEY IS NOT A LAND DIVISION OR SUBDIVISION AS DEFINED IN THE NEW MEXICO SUBDIVISION ACT AND THAT THIS INSTRUMENT IS AN EASEMENT PLAT OF A PROPOSED EASEMENT. 3 FEB 2024

TIM C. PAPPAS, N.M. P.L.S. **No.21209**

SURVEY DATE: 12/26/2023
JOB NO.: B23.EOG.0107
DRAFT: KS
SHEET: 1 OF 1

eog resources

NEVER BETTER 14 FED COM CTB 700 PROPOSED ACCESS ROAD
SEC. 14, T-22-S, R-32-E, N.M.P.M.,
LEA COUNTY, NEW MEXICO

PETROLEUM FIELD SERVICES, LLC
DBA: ASCENT GEOMATICS SOLUTIONS
8620 WOLFF CT.
WESTMINSTER, CO 80031
OFFICE: (303) 928-7128

PLAT: \\AGSFS\PROJECTS\EOG_B230107PRODROW_EXHIBITS\ACCESS\EP_NEVER_BETTER_14_FED_COM_CTB_ACCESS_ROAD 2/2/24 2:24 PM Ksarmiento

SECTION 14, TOWNSHIP 22 SOUTH, RANGE 32 EAST,
LEA COUNTY, NEW MEXICO

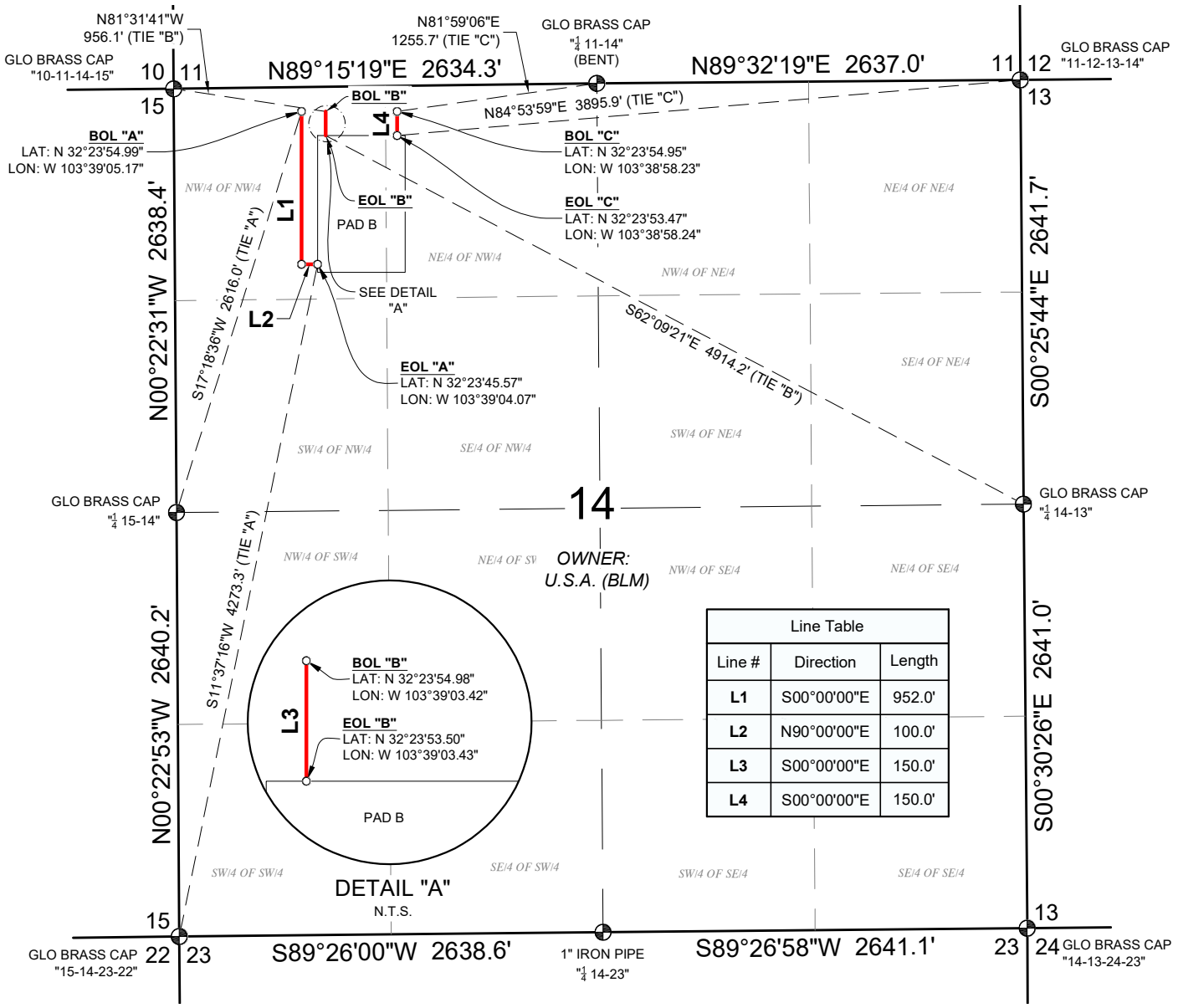

Line Table		
Line #	Direction	Length
L1	S00°00'00"E	952.0'
L2	N90°00'00"E	100.0'
L3	S00°00'00"E	150.0'
L4	S00°00'00"E	150.0'

NEVER BETTER 14 FED COM PAD B PROPOSED ACCESS ROADS

CENTERLINE DESCRIPTION

A STRIP OF LAND 30 FEET IN WIDTH AND 1352.0 FEET, 81.9 RODS OR 0.3 MILES IN LENGTH, SITUATED IN SECTION 14, TOWNSHIP 22 SOUTH, RANGE 32 EAST, N.M.P.M., LEA COUNTY, NEW MEXICO, AND BEING 15 FEET ON EACH SIDE OF THE SURVEY OF CENTERLINE AS SHOWN HEREON.

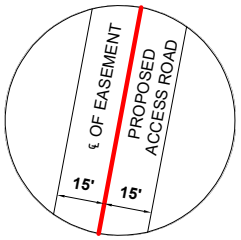

TYPICAL
RIGHT-OF-WAY EASEMENT

PROPOSED ACCESS ROADS
POINT FOR BEGIN/END OR ANGLE POINT
FOUND MONUMENT AS SHOWN

0 500' 1000'
SCALE: 1"= 1000'

NOTES:
- BEARINGS, COORDINATES, AND DISTANCES SHOWN HEREON ARE BASED ON THE NEW MEXICO STATE PLANE COORDINATE SYSTEM, EAST ZONE, NAD 83- 2011 (EPOCH 2010) FRAMEWORK, AS DERIVED BY OPUS SOLUTION. THE ELEVATIONS SHOWN HEREON AREA BASED ON NAVD 88.
- LAND OWNERSHIP INFORMATION REFLECTED HEREON WAS PROVIDED BY CLIENT AND/OR OBTAINED FROM PUBLIC DOMAIN DATA, NO INDEPENDENT OWNERSHIP SEARCH WAS PERFORMED BY ASCENT

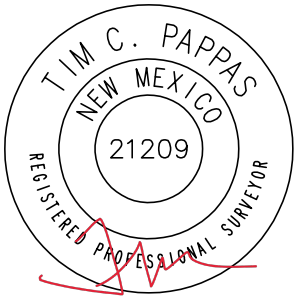

I, TIM C. PAPPAS, NEW MEXICO PROFESSIONAL SURVEYOR NO. 21209, DO HEREBY CERTIFY THAT THIS EASEMENT PLAT AND THE ACTUAL SURVEY ON THE GROUND UPON WHICH IT IS BASED WERE PERFORMED BY ME OR UNDER MY SUPERVISION; THAT I AM RESPONSIBLE FOR THIS SURVEY; THAT THIS SURVEY MEETS THE MINIMUM STANDARDS FOR SURVEYING IN NEW MEXICO; AND THAT IT IS TRUE AND CORRECT TO THE BEST OF MY KNOWLEDGE AND I FURTHER CERTIFY THAT THIS SURVEY IS NOT A LAND DIVISION OR SUBDIVISION AS DEFINED IN THE NEW MEXICO SUBDIVISION ACT AND THAT THIS INSTRUMENT IS AN EASEMENT PLAT OF A PROPOSED EASEMENT.

26 JAN 2024

TIM C. PAPPAS, N.M. P.L.S. **No.21209**

SURVEY DATE: 01/04/2024
JOB NO.: B23.EOG.0106

DRAFT:JC
SHEET: 1 OF 1

eog resources

NEVER BETTER 14 FED COM PAD B PROPOSED ACCESS ROADS
SEC. 14, T-22-S, R-32-E, N.M.P.M.,
LEA COUNTY, NEW MEXICO

PETROLEUM FIELD SERVICES, LLC
DBA: ASCENT GEOMATICS SOLUTIONS
8620 WOLFF CT.
WESTMINSTER, CO 80031
OFFICE: (303) 928-7128

PLAT: P:\EOG__B23\0106\PROD\ROW_EXHIBITS\ACCESS_ROADS\EP_NEVER_BETTER_14_FED_COM_PAD_B_ACCESS_ROAD 1/26/24 12:22 PM jcastro

EXHIBIT 3
1 MILE RADIUS BUFFER MAP

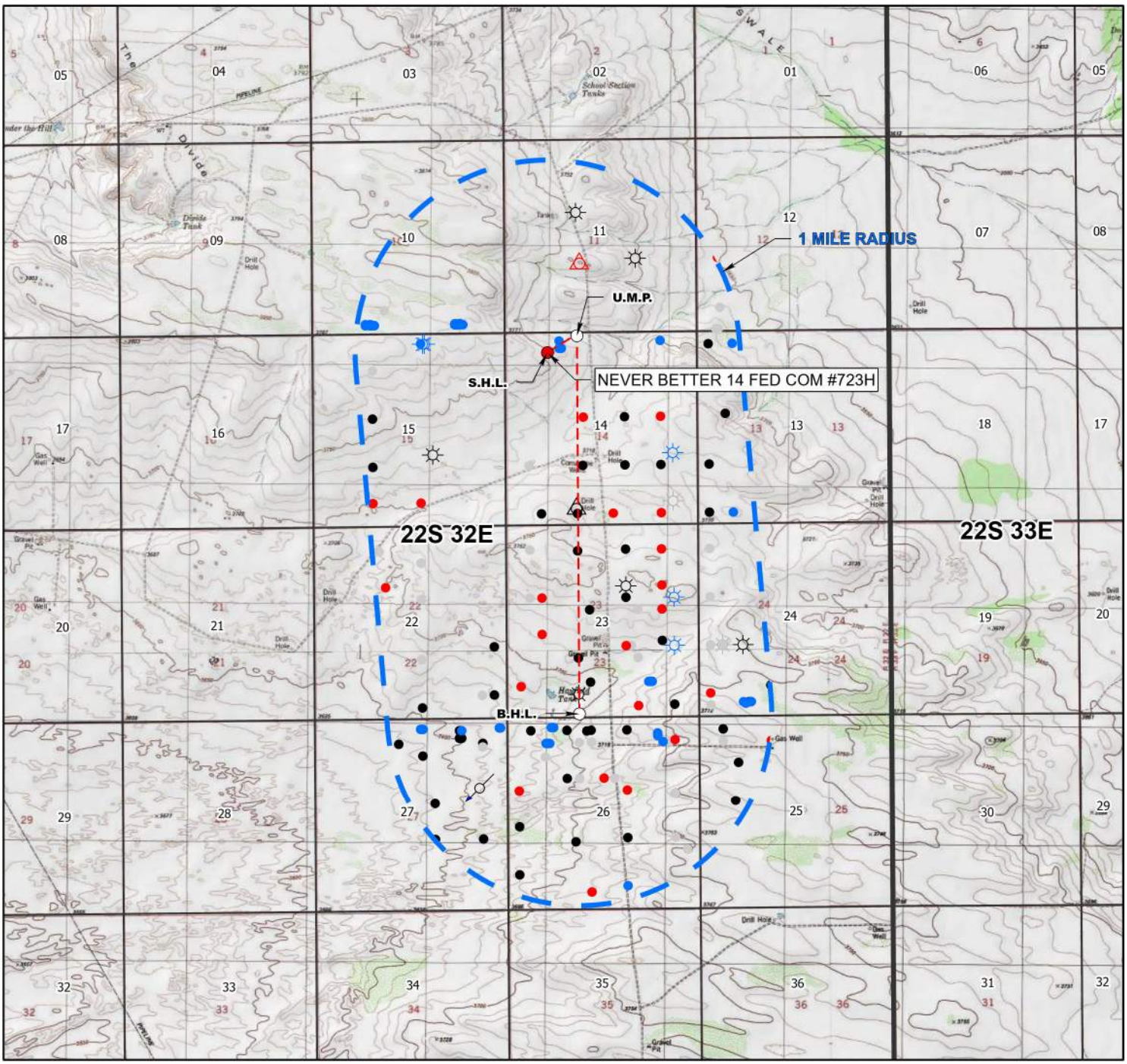

LEASE NAME & WELL NO.: NEVER BETTER 14 FED COM #723H
LATITUDE: N 32.397522 LONG: W 103.650228 ELEVATION: 3753'

SECTION: 14 TWP: 22S RGE: 32E SURVEY: N.M.P.M.
COUNTY: LEA STATE: NM

DESCRIPTION: 549' FNL & 1167' FWL

S.H.L.
UMP; LMP; BHL
Bore Line
Gas, Active
Gas, Cancelled
Gas, New
Injection, Active
Oil, Active
Oil, Cancelled
Oil, New
Oil, Plugged
Salt Water Injection, Active
Salt Water Injection, Plugged
Section
Township

eog resources

JOB No.: EOG_B230106

NOTE:
ALL BEARINGS, DISTANCES, AND COORDINATE VALUES CONTAINED HEREIN ARE GRID BASED UPON THE FOLLOWING COORDINATE SYSTEM: NAD83 NEW MEXICO STATE PLANE, EAST ZONE, U.S. SURVEY FEET

DISCLAIMER:
THIS PLOT DOES NOT REPRESENT A MONUMENTED LAND SURVEY AND SHOULD NOT BE RELIED UPON TO DETERMINE BOUNDARY LINES, PROPERTY OWNERSHIP OR OTHER PROPERTY INTERESTS.

N
0 2,000 4,000
SCALE: 1"=4,000'

ASCENT GEOMATICS SOLUTIONS
8620 WOLFF COURT
WESTMINSTER, CO 80031
OFFICE: (303) 928-7128
WWW.ASCENTGEOMATICS.COM

C:\GIS\Projects\EOG\PROJ\EOG_Fed_Pkg 1/11/2024 1:08 PM

Page 170 of 203

EXHIBIT 5

SECTION 14, TOWNSHIP 22 SOUTH, RANGE 32 EAST,
LEA COUNTY, NEW MEXICO

NEVER BETTER 14 FED COM INFRASTRUCTURE MAP

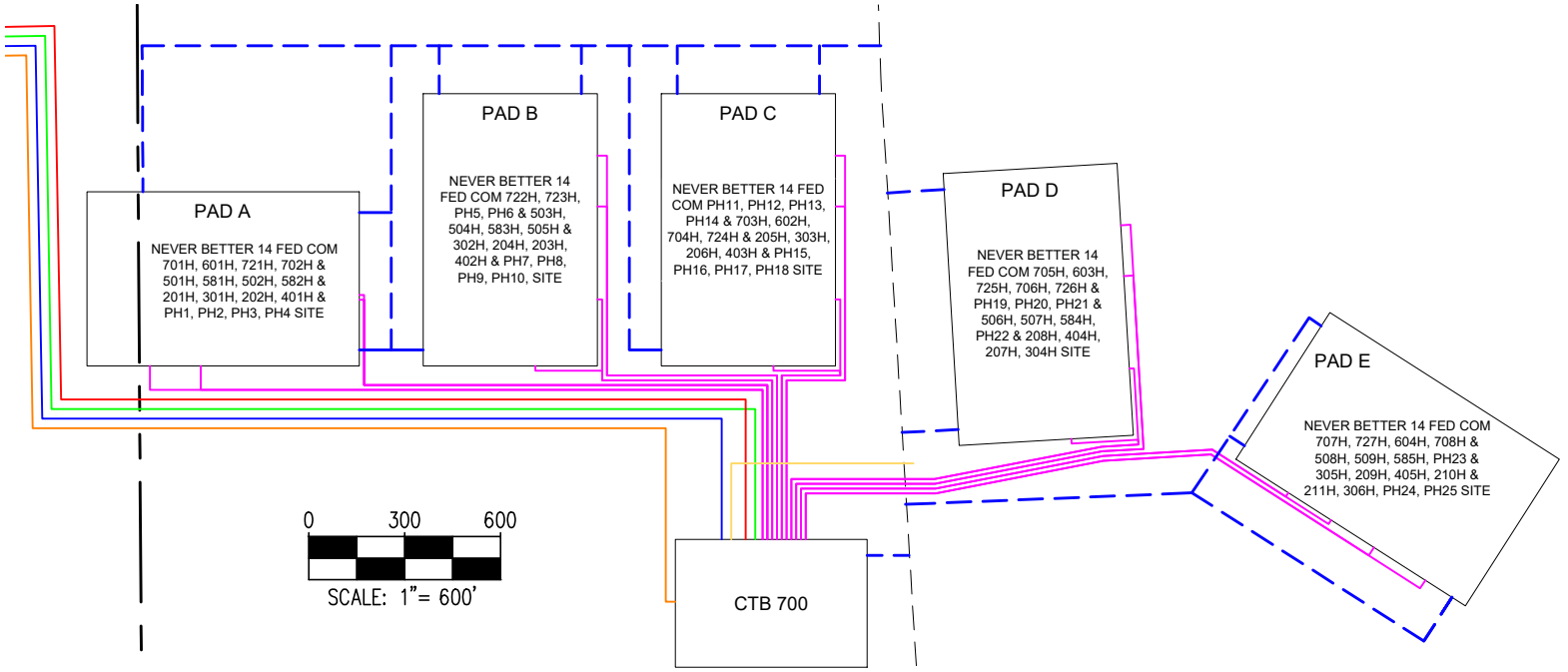

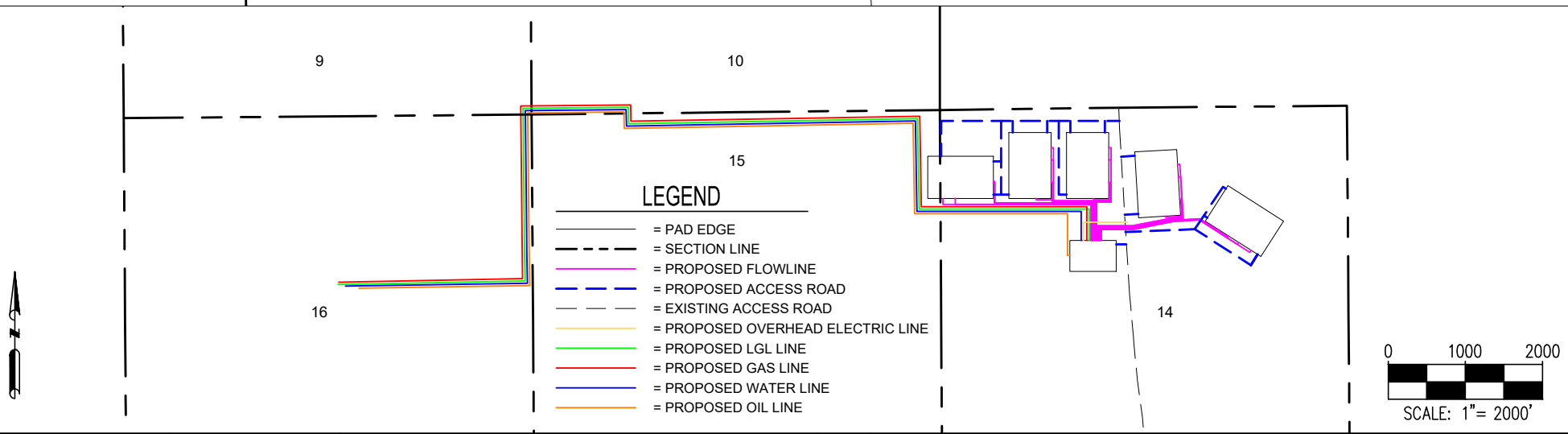

ASCENT
8620 WOLFF CT,
WESTMINSTER, CO 80031
OFFICE: (303) 928-7128
www.ascentgeomatics.com

DRAFTED DATE: 03/06/2024
FILE: EOG_NEVER_BETTER_14_FED_COM_FLOWLINE_DETAIL
BY: LF
CHECKED: CLP

PROJECT NAME: NEVER BETTER 14 FED COM INFRASTRUCTURE MAP
REV. 1
SURFACE LOCATION: SEC. 14, T22S, R32E, N.M.P.M.
LEA COUNTY, NEW MEXICO
PROJECT NUMBER: EOG__B230106

PREPARED FOR: eog resources

Received by OCD: 10/28/2026 2:09:08 PM
Released to Imaging: 11/13/2026 9:51:12 AM

SECTION 14, TOWNSHIP 22 SOUTH, RANGE 32 EAST,
LEA COUNTY, NEW MEXICO

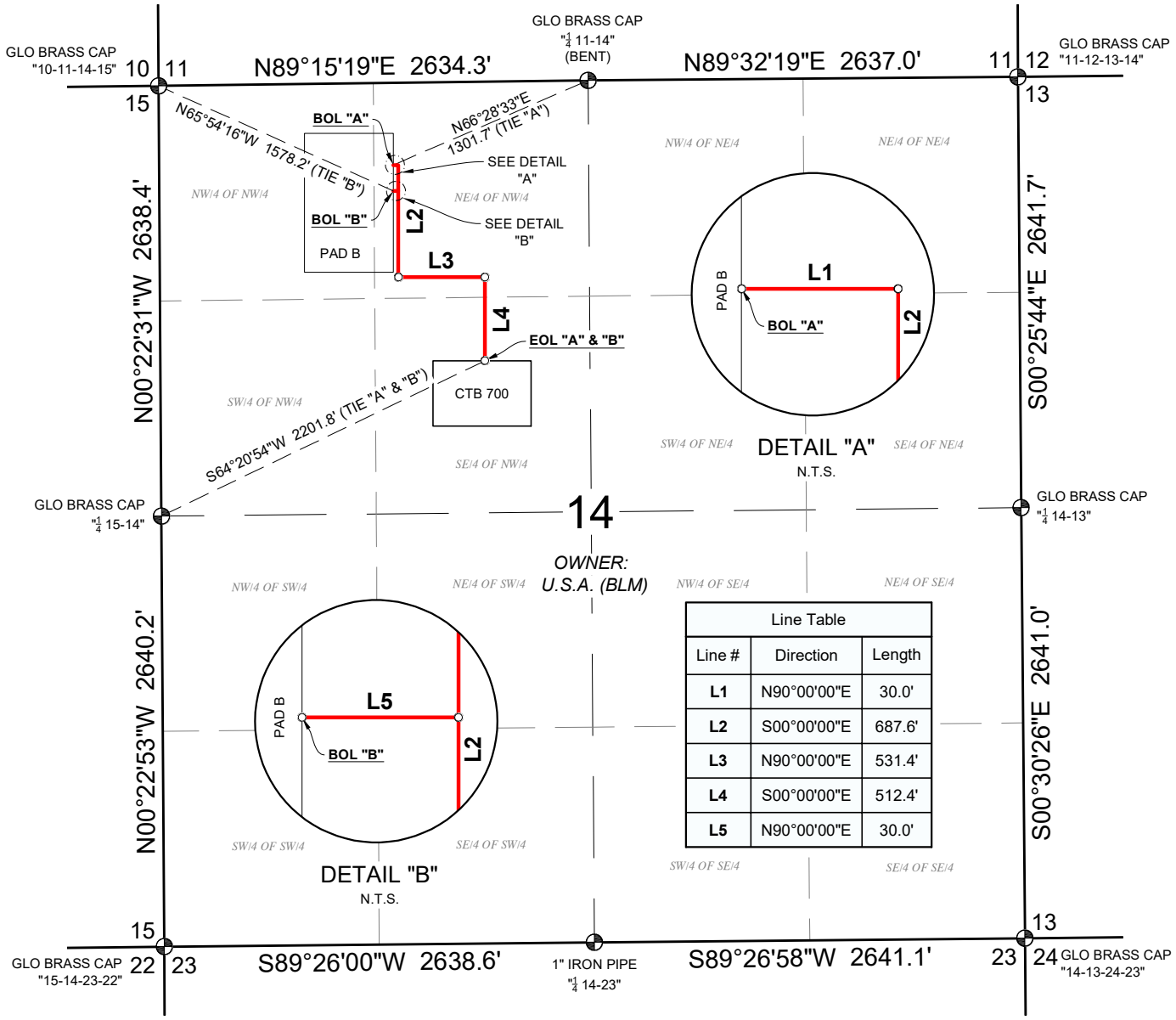

Line Table		
Line #	Direction	Length
L1	N90°00'00"E	30.0'
L2	S00°00'00"E	687.6'
L3	N90°00'00"E	531.4'
L4	S00°00'00"E	512.4'
L5	N90°00'00"E	30.0'

NEVER BETTER 14 FED COM PAD B 722H, 723H & 503H, 504H, 583H, 505H PROPOSED FLOWLINE, GAS LIFT, AND FIBER OPTIC LINES

CENTERLINE DESCRIPTION

A STRIP OF LAND 30 FEET IN WIDTH AND 1791.4 FEET, 108.6 RODS OR 0.3 MILES IN LENGTH, SITUATED IN SECTION 14, TOWNSHIP 22 SOUTH, RANGE 32 EAST, N.M.P.M., LEA COUNTY, NEW MEXICO, AND BEING 15 FEET ON EACH SIDE OF THE SURVEY OF CENTERLINE AS SHOWN HEREON.

- PROPOSED FLOWLINE, GAS LIFT, AND FIBER OPTIC LINES
- POINT FOR BEGIN/END OR ANGLE POINT
- FOUND MONUMENT AS SHOWN

0 500' 1000'
SCALE: 1"= 1000'

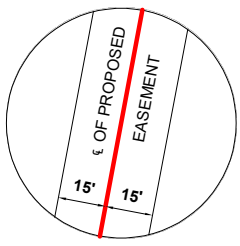

TYPICAL
RIGHT-OF-WAY EASEMENT
(L1, L2 & L5)

2 FLOWLINES IN SAME DITCH

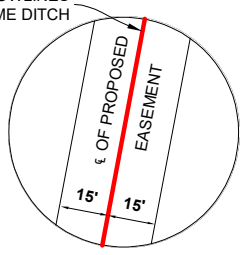

TYPICAL
RIGHT-OF-WAY EASEMENT
(L2, L3 & L4)

NOTES:
- BEARINGS, COORDINATES, AND DISTANCES SHOWN HEREON ARE BASED ON THE NEW MEXICO STATE PLANE COORDINATE SYSTEM, EAST ZONE, NAD 83- 2011 (EPOCH 2010) FRAMEWORK, AS DERIVED BY OPUS SOLUTION. THE ELEVATIONS SHOWN HEREON AREA BASED ON NAVD 88.
- LAND OWNERSHIP INFORMATION REFLECTED HEREON WAS PROVIDED BY CLIENT AND/OR OBTAINED FROM PUBLIC DOMAIN DATA, NO INDEPENDENT OWNERSHIP SEARCH WAS PERFORMED BY ASCENT

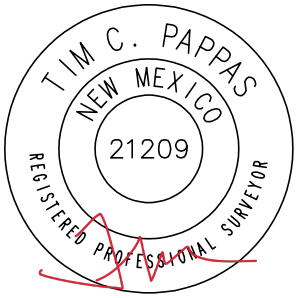

I, TIM C. PAPPAS, NEW MEXICO PROFESSIONAL SURVEYOR NO. 21209, DO HEREBY CERTIFY THAT THIS EASEMENT PLAT AND THE ACTUAL SURVEY ON THE GROUND UPON WHICH IT IS BASED WERE PERFORMED BY ME OR UNDER MY SUPERVISION; THAT I AM RESPONSIBLE FOR THIS SURVEY; THAT THIS SURVEY MEETS THE MINIMUM STANDARDS FOR SURVEYING IN NEW MEXICO; AND THAT IT IS TRUE AND CORRECT TO THE BEST OF MY KNOWLEDGE AND I FURTHER CERTIFY THAT THIS SURVEY IS NOT A LAND DIVISION OR SUBDIVISION AS DEFINED IN THE NEW MEXICO SUBDIVISION ACT AND THAT THIS INSTRUMENT IS AN EASEMENT PLAT OF A PROPOSED EASEMENT.

26 JAN 2024

TIM C. PAPPAS, N.M. P.L.S. **No.21209**

SURVEY DATE: 01/04/2024
JOB NO.: B23.EOG.0106

DRAFT: JC
SHEET: 1 OF 1

eog resources

NEVER BETTER 14 FED COM PAD B 722H, 723H & 503H, 504H, 583H, 505H PROPOSED FLOWLINE, GAS LIFT, AND FIBER OPTIC LINES
SEC. 14, T-22-S, R-32-E, N.M.P.M.,
LEA COUNTY, NEW MEXICO

ASCENT GEOMATICS SOLUTIONS

PETROLEUM FIELD SERVICES, LLC
DBA: ASCENT GEOMATICS SOLUTIONS
8620 WOLFF CT.
WESTMINSTER, CO 80031
OFFICE: (303) 928-7128

PLAT: P:\EOG_B23\0106\PROD\ROW_EXHIBITS\FLOWLINES\PAD_B\EP_NEVER_BETTER_14_FED_COM_PAD_B_722H_723H_503H_504H_583H_505H_FL 1/26/24 2:49 AM Jcastro

SECTION 15, TOWNSHIP 22 SOUTH, RANGE 32 EAST,
LEA COUNTY, NEW MEXICO

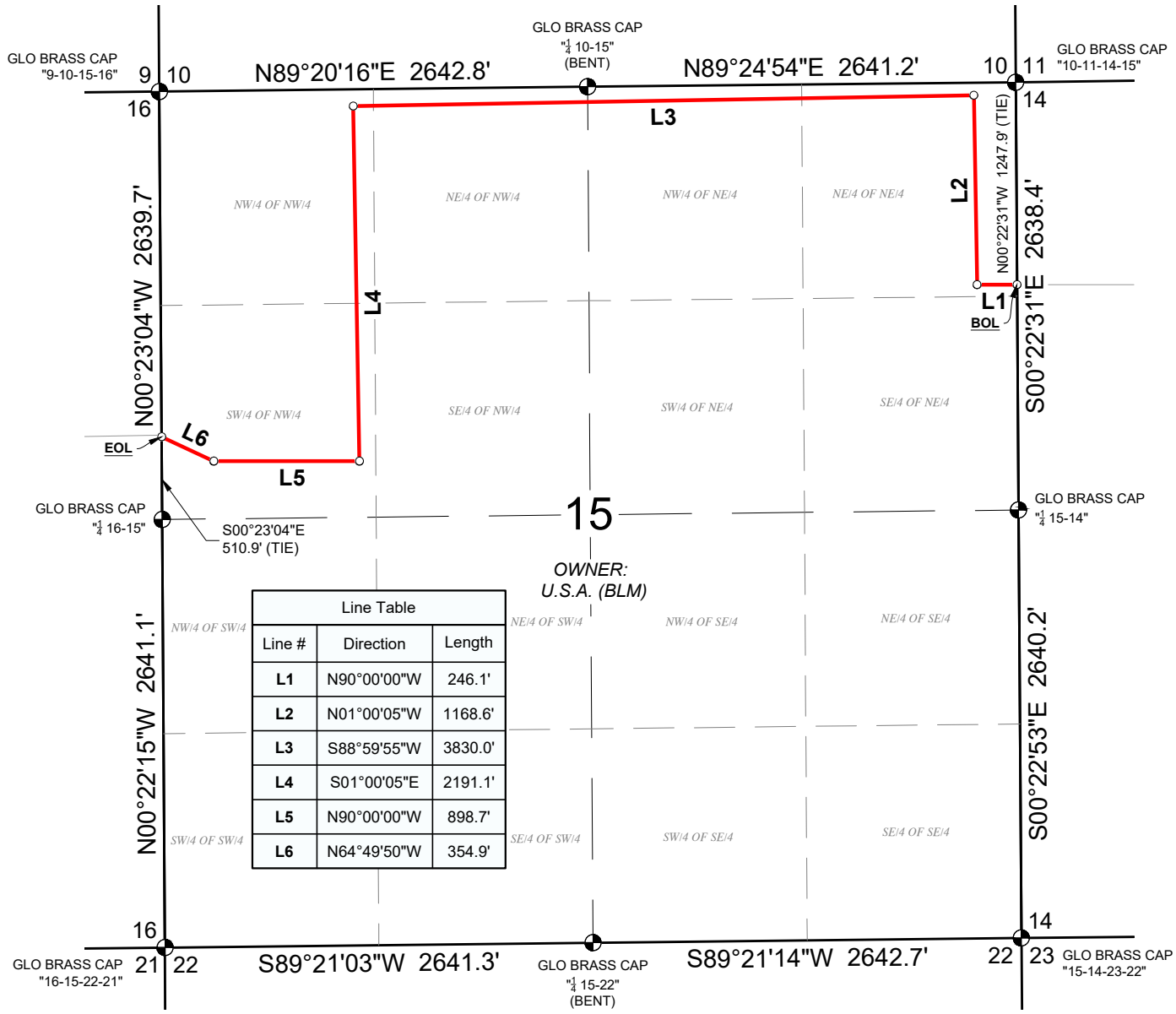

Line Table		
Line #	Direction	Length
L1	N90°00'00"W	246.1'
L2	N01°00'05"W	1168.6'
L3	S88°59'55"W	3830.0'
L4	S01°00'05"E	2191.1'
L5	N90°00'00"W	898.7'
L6	N64°49'50"W	354.9'

NEVER BETTER TO AIR BISCUIT PROPOSED GAS LINE
CENTERLINE DESCRIPTION

A STRIP OF LAND 30 FEET IN WIDTH AND 8689.4 FEET, 526.6 RODS OR 1.6 MILES IN LENGTH, SITUATED IN SECTION 15, TOWNSHIP 22 SOUTH, RANGE 32 EAST, N.M.P.M., LEA COUNTY, NEW MEXICO, AND BEING 15 FEET ON EACH SIDE OF THE SURVEY OF CENTERLINE AS SHOWN HEREON.

- PROPOSED GAS LINE
- PROPOSED TIE-IN GAS LINE
- POINT FOR BEGIN/END OR ANGLE POINT
- FOUND MONUMENT AS SHOWN

NOTES:
- BEARINGS, COORDINATES, AND DISTANCES SHOWN HEREON ARE BASED ON THE NEW MEXICO STATE PLANE COORDINATE SYSTEM, EAST ZONE, NAD 83- 2011 (EPOCH 2010) FRAMEWORK, AS DERIVED BY OPUS SOLUTION. THE ELEVATIONS SHOWN HEREON AREA BASED ON NAVD 88.
- LAND OWNERSHIP INFORMATION REFLECTED HEREON WAS PROVIDED BY CLIENT AND/OR OBTAINED FROM PUBLIC DOMAIN DATA, NO INDEPENDENT OWNERSHIP SEARCH WAS PERFORMED BY ASCENT

0 500' 1000'
SCALE: 1"= 1000'

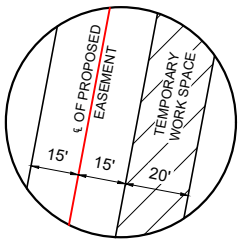

TYPICAL N.T.S.
RIGHT-OF-WAY EASEMENT, TEMPORARY WORK SPACE CONFIGURATION

TIM C. PAPPAS NEW MEXICO 21209 REGISTERED PROFESSIONAL SURVEYOR

I, TIM C. PAPPAS, NEW MEXICO PROFESSIONAL SURVEYOR NO. 21209, DO HEREBY CERTIFY THAT THIS EASEMENT PLAT AND THE ACTUAL SURVEY ON THE GROUND UPON WHICH IT IS BASED WERE PERFORMED BY ME OR UNDER MY SUPERVISION; THAT I AM RESPONSIBLE FOR THIS SURVEY; THAT THIS SURVEY MEETS THE MINIMUM STANDARDS FOR SURVEYING IN NEW MEXICO; AND THAT IT IS TRUE AND CORRECT TO THE BEST OF MY KNOWLEDGE AND I FURTHER CERTIFY THAT THIS SURVEY IS NOT A LAND DIVISION OR SUBDIVISION AS DEFINED IN THE NEW MEXICO SUBDIVISION ACT AND THAT THIS INSTRUMENT IS AN EASEMENT PLAT OF A PROPOSED EASEMENT.

9 APRIL 2024

TIM C. PAPPAS, N.M. P.L.S. **No.21209**

SURVEY DATE: 04/04/2024
JOB NO.: B23.EOG.0107

DRAFT: KS
SHEET: 1 OF 1

eog resources

NEVER BETTER TO AIR BISCUIT PROPOSED GAS LINE REV 1
SEC. 15, T-22-S, R-32-E, N.M.P.M.,
LEA COUNTY, NEW MEXICO

ASCENT GEOMATICS SOLUTIONS

PETROLEUM FIELD SERVICES, LLC
DBA: ASCENT GEOMATICS SOLUTIONS
8620 WOLFF CT.
WESTMINSTER, CO 80031
OFFICE: (303) 928-7128

PLAT: \\AGS\FS\PROJECTS\EOG_B23\0107\PRODROW_EXHIBITS\UTILITIES\GAS\EP_NEVER_BETTER_TO_AIR_BISCUIT_GAS_LINE_R1 4/8/24 6:38 PM Ksarmiento

SECTION 16, TOWNSHIP 22 SOUTH, RANGE 32 EAST,
LEA COUNTY, NEW MEXICO

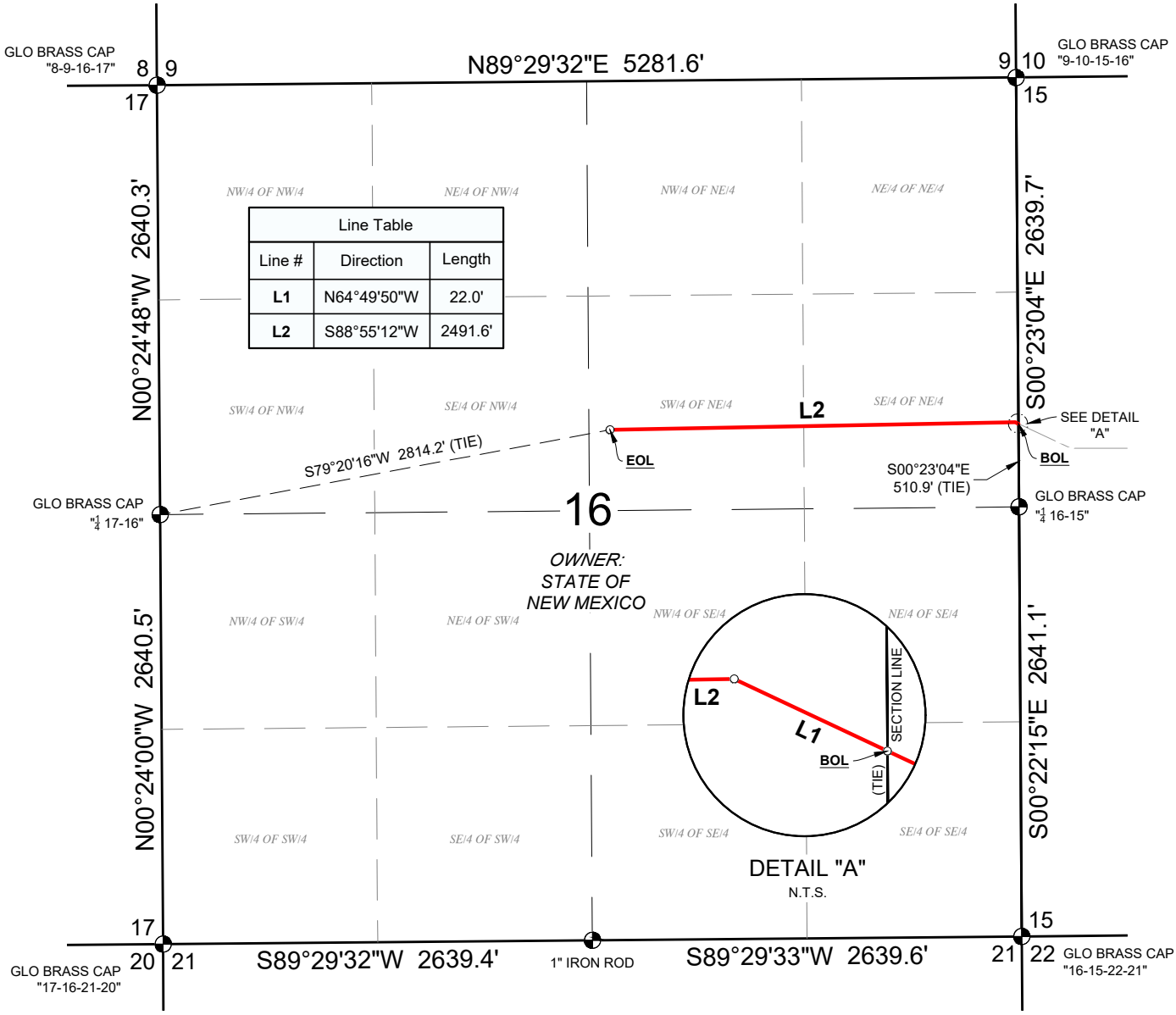

NEVER BETTER TO AIR BISCUIT PROPOSED GAS LINE
CENTERLINE DESCRIPTION

A STRIP OF LAND 30 FEET IN WIDTH AND 2513.6 FEET OR 152.3 RODS IN LENGTH, 1.7 ACRES SITUATED IN SECTION 16, TOWNSHIP 22 SOUTH, RANGE 32 EAST, N.M.P.M., LEA COUNTY, NEW MEXICO, AND BEING 15 FEET ON EACH SIDE OF THE SURVEY OF CENTERLINE AS SHOWN HEREON.
SE/4 NE/4 = 1322.5 FEET, 80.1 RODS, 0.9 ACRES
SW/4 NE/4 = 1191.1 FEET, 72.2 RODS, 0.8 ACRES

- PROPOSED GAS LINE
- PROPOSED TIE-IN GAS LINE
- POINT FOR BEGIN/END OR ANGLE POINT
- FOUND MONUMENT AS SHOWN

NOTES:
- BEARINGS, COORDINATES, AND DISTANCES SHOWN HEREON ARE BASED ON THE NEW MEXICO STATE PLANE COORDINATE SYSTEM, EAST ZONE, NAD 83- 2011 (EPOCH 2010) FRAMEWORK, AS DERIVED BY OPUS SOLUTION. THE ELEVATIONS SHOWN HEREON AREA BASED ON NAVD 88.
- LAND OWNERSHIP INFORMATION REFLECTED HEREON WAS PROVIDED BY CLIENT AND/OR OBTAINED FROM PUBLIC DOMAIN DATA, NO INDEPENDENT OWNERSHIP SEARCH WAS PERFORMED BY ASCENT

0 500' 1000'
SCALE: 1"= 1000'

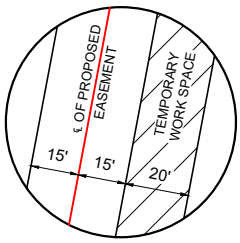

TYPICAL N.T.S.
RIGHT-OF-WAY EASEMENT, TEMPORARY WORK SPACE CONFIGURATION

TIM C. PAPPAS NEW MEXICO 21209 REGISTERED PROFESSIONAL SURVEYOR

I, TIM C. PAPPAS, NEW MEXICO PROFESSIONAL SURVEYOR NO. 21209, DO HEREBY CERTIFY THAT THIS EASEMENT PLAT AND THE ACTUAL SURVEY ON THE GROUND UPON WHICH IT IS BASED WERE PERFORMED BY ME OR UNDER MY SUPERVISION; THAT I AM RESPONSIBLE FOR THIS SURVEY; THAT THIS SURVEY MEETS THE MINIMUM STANDARDS FOR SURVEYING IN NEW MEXICO; AND THAT IT IS TRUE AND CORRECT TO THE BEST OF MY KNOWLEDGE AND I FURTHER CERTIFY THAT THIS SURVEY IS NOT A LAND DIVISION OR SUBDIVISION AS DEFINED IN THE NEW MEXICO SUBDIVISION ACT AND THAT THIS INSTRUMENT IS AN EASEMENT PLAT OF A PROPOSED EASEMENT.

9 APRIL 2024

TIM C. PAPPAS, N.M. P.L.S. **No.21209**

SURVEY DATE: 04/04/2024
JOB NO.: B23.EOG.0107
DRAFT: KS
SHEET: 1 OF 1

eog resources

NEVER BETTER TO AIR BISCUIT PROPOSED GAS LINE REV 1
SEC. 16, T-22-S, R-32-E, N.M.P.M.,
LEA COUNTY, NEW MEXICO

ASCENT GEOMATICS SOLUTIONS
PETROLEUM FIELD SERVICES, LLC
DBA: ASCENT GEOMATICS SOLUTIONS
8620 WOLFF CT.
WESTMINSTER, CO 80031
OFFICE: (303) 928-7128

PLAT: \AGSFS\PROJECTS\EOG_B23\107\PRODROW_EXHIBITS\UTILITIES\GAS\EP_NEVER_BETTER_TO_AIR_BISCUIT_GAS_LINE_R1 4/9/24 12:45 PM Ksarmiento

SECTION 15, TOWNSHIP 22 SOUTH, RANGE 32 EAST,
LEA COUNTY, NEW MEXICO

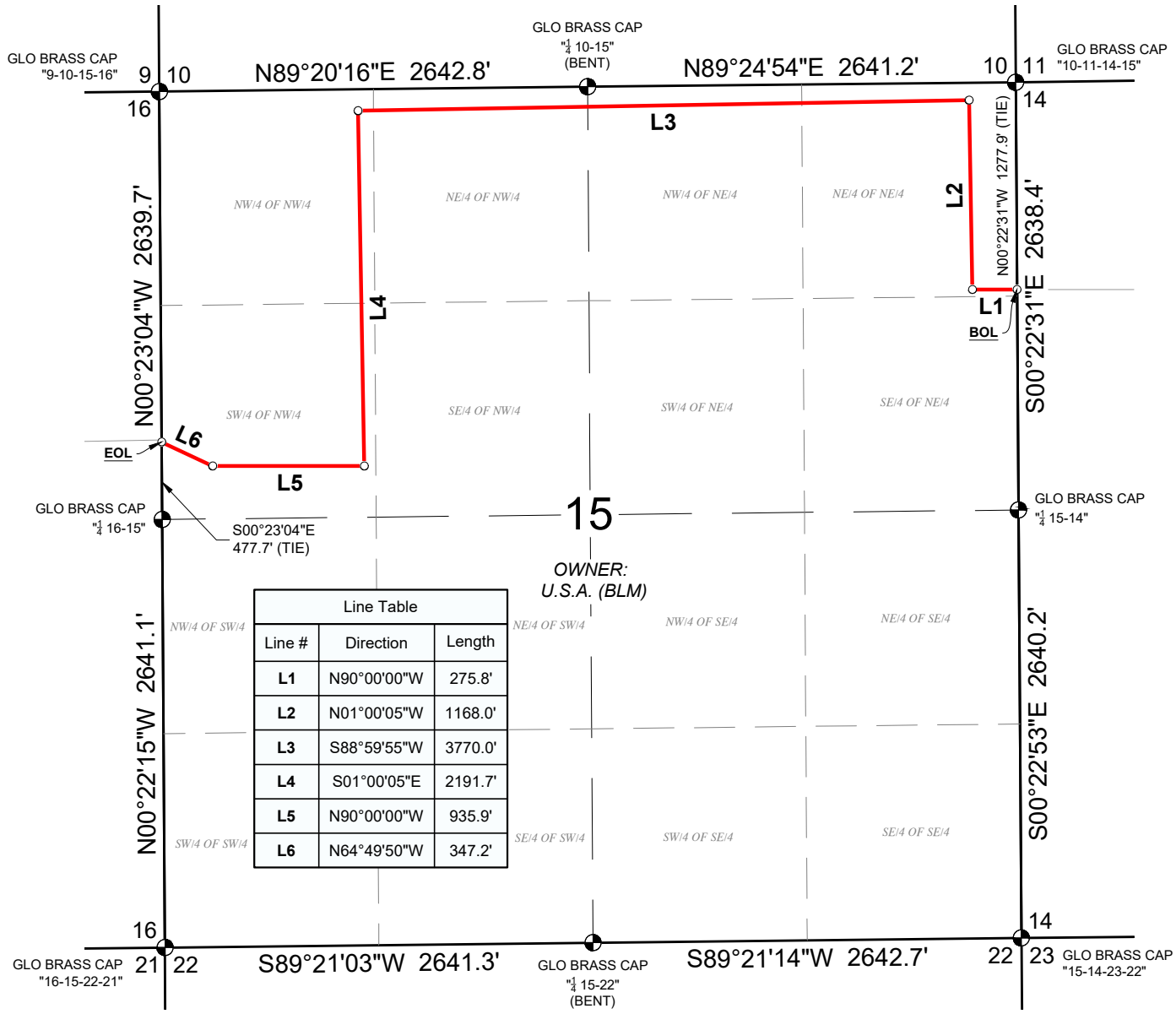

Line Table		
Line #	Direction	Length
L1	N90°00'00"W	275.8'
L2	N01°00'05"W	1168.0'
L3	S88°59'55"W	3770.0'
L4	S01°00'05"E	2191.7'
L5	N90°00'00"W	935.9'
L6	N64°49'50"W	347.2'

NEVER BETTER TO AIR BISCUIT PROPOSED LGL LINE
CENTERLINE DESCRIPTION

A STRIP OF LAND 30 FEET IN WIDTH AND 8688.6 FEET, 526.6 RODS OR 1.6 MILES IN LENGTH, SITUATED IN SECTION 15, TOWNSHIP 22 SOUTH, RANGE 32 EAST, N.M.P.M., LEA COUNTY, NEW MEXICO, AND BEING 15 FEET ON EACH SIDE OF THE SURVEY OF CENTERLINE AS SHOWN HEREON.

- PROPOSED LGL LINE
- PROPOSED TIE-IN LGL LINE
- POINT FOR BEGIN/END OR ANGLE POINT
- FOUND MONUMENT AS SHOWN

NOTES:
- BEARINGS, COORDINATES, AND DISTANCES SHOWN HEREON ARE BASED ON THE NEW MEXICO STATE PLANE COORDINATE SYSTEM, EAST ZONE, NAD 83- 2011 (EPOCH 2010) FRAMEWORK, AS DERIVED BY OPUS SOLUTION. THE ELEVATIONS SHOWN HEREON AREA BASED ON NAVD 88.
- LAND OWNERSHIP INFORMATION REFLECTED HEREON WAS PROVIDED BY CLIENT AND/OR OBTAINED FROM PUBLIC DOMAIN DATA, NO INDEPENDENT OWNERSHIP SEARCH WAS PERFORMED BY ASCENT

0 500' 1000'
SCALE: 1"= 1000'

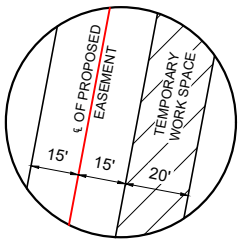

TYPICAL N.T.S.
RIGHT-OF-WAY EASEMENT, TEMPORARY WORK SPACE CONFIGURATION

TIM C. PAPPAS NEW MEXICO 21209 REGISTERED PROFESSIONAL SURVEYOR

I, TIM C. PAPPAS, NEW MEXICO PROFESSIONAL SURVEYOR NO. 21209, DO HEREBY CERTIFY THAT THIS EASEMENT PLAT AND THE ACTUAL SURVEY ON THE GROUND UPON WHICH IT IS BASED WERE PERFORMED BY ME OR UNDER MY SUPERVISION; THAT I AM RESPONSIBLE FOR THIS SURVEY; THAT THIS SURVEY MEETS THE MINIMUM STANDARDS FOR SURVEYING IN NEW MEXICO; AND THAT IT IS TRUE AND CORRECT TO THE BEST OF MY KNOWLEDGE AND I FURTHER CERTIFY THAT THIS SURVEY IS NOT A LAND DIVISION OR SUBDIVISION AS DEFINED IN THE NEW MEXICO SUBDIVISION ACT AND THAT THIS INSTRUMENT IS AN EASEMENT PLAT OF A PROPOSED EASEMENT.

9 APRIL 2024

TIM C. PAPPAS, N.M. P.L.S. **No.21209**

SURVEY DATE: 04/04/2024
JOB NO.: B23.EOG.0107
DRAFT: KS
SHEET: 1 OF 1

eog resources

NEVER BETTER TO AIR BISCUIT PROPOSED LGL LINE REV 1
SEC. 15, T-22-S, R-32-E, N.M.P.M.,
LEA COUNTY, NEW MEXICO

ASCENT GEOMATICS SOLUTIONS
PETROLEUM FIELD SERVICES, LLC
DBA: ASCENT GEOMATICS SOLUTIONS
8620 WOLFF CT.
WESTMINSTER, CO 80031
OFFICE: (303) 928-7128

PLAT: \AGSFS\PROJECTS\EOG_B23\0107\PROD\ROW_EXHIBITS\UTILITIES\LGL\EP_NEVER_BETTER_TO_AIR_BISCUIT_LGL_LINE_R1 4/8/24 6:34 PM Ksarmiento

SECTION 16, TOWNSHIP 22 SOUTH, RANGE 32 EAST,
LEA COUNTY, NEW MEXICO

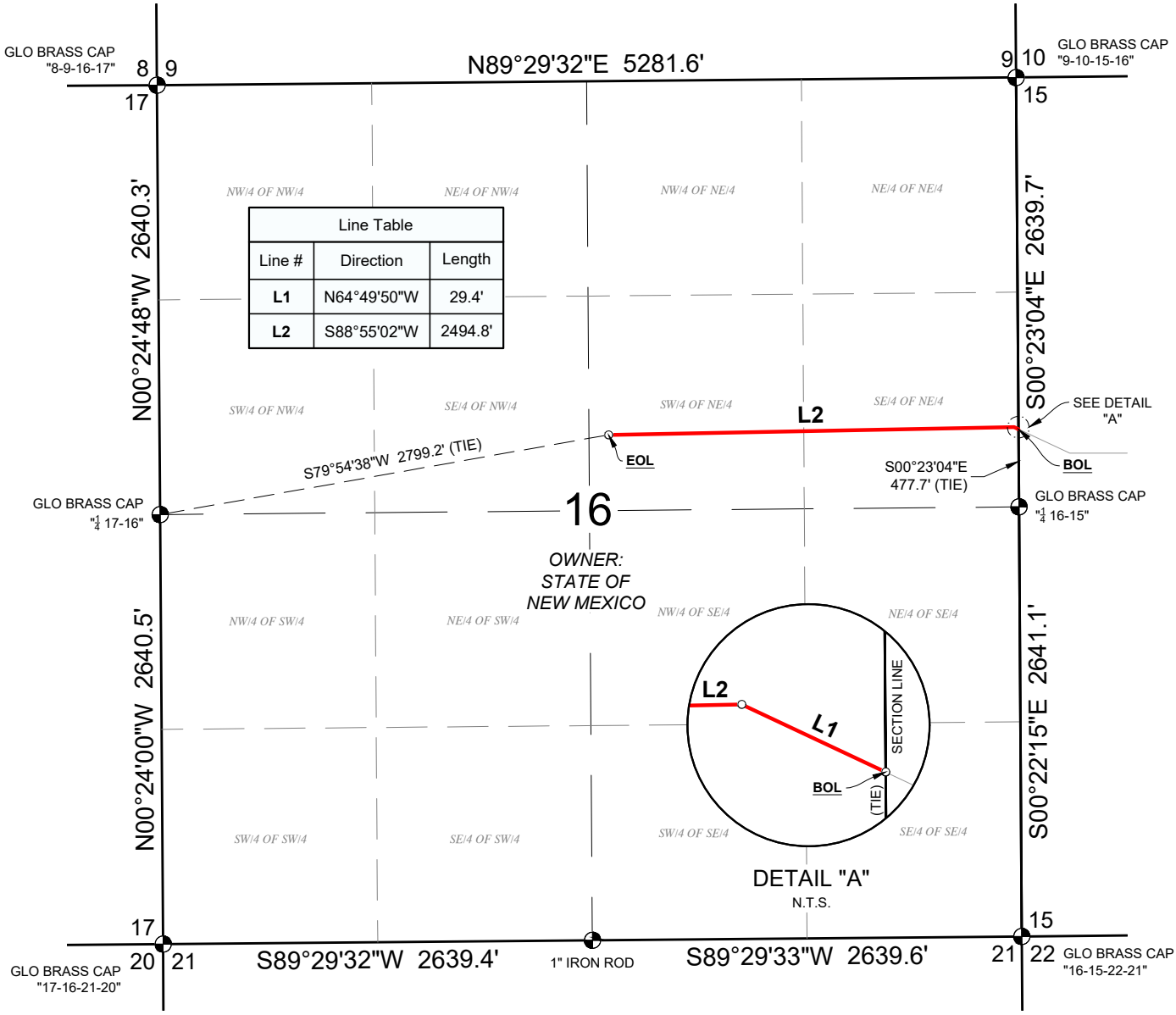

NEVER BETTER TO AIR BISCUIT PROPOSED LGL LINE

CENTERLINE DESCRIPTION

A STRIP OF LAND 30 FEET IN WIDTH AND 2524.2 FEET OR 153.0 RODS IN LENGTH, 1.7 ACRES SITUATED IN SECTION 16, TOWNSHIP 22 SOUTH, RANGE 32 EAST, N.M.P.M., LEA COUNTY, NEW MEXICO, AND BEING 15 FEET ON EACH SIDE OF THE SURVEY OF CENTERLINE AS SHOWN HEREON.
SE/4 NE/4 = 1323.3 FEET, 80.2 RODS, 0.9 ACRES
SW/4 NE/4 = 1200.9 FEET, 72.8 RODS, 0.8 ACRES

- PROPOSED LGL LINE
- PROPOSED TIE-IN LGL LINE
- POINT FOR BEGIN/END OR ANGLE POINT
- FOUND MONUMENT AS SHOWN

NOTES:
- BEARINGS, COORDINATES, AND DISTANCES SHOWN HEREON ARE BASED ON THE NEW MEXICO STATE PLANE COORDINATE SYSTEM, EAST ZONE, NAD 83- 2011 (EPOCH 2010) FRAMEWORK, AS DERIVED BY OPUS SOLUTION. THE ELEVATIONS SHOWN HEREON AREA BASED ON NAVD 88.
- LAND OWNERSHIP INFORMATION REFLECTED HEREON WAS PROVIDED BY CLIENT AND/OR OBTAINED FROM PUBLIC DOMAIN DATA, NO INDEPENDENT OWNERSHIP SEARCH WAS PERFORMED BY ASCENT

0 500' 1000'
SCALE: 1"= 1000'

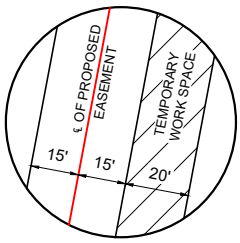

TYPICAL N.T.S.
RIGHT-OF-WAY EASEMENT, TEMPORARY WORK SPACE CONFIGURATION

TIM C. PAPPAS NEW MEXICO 21209 REGISTERED PROFESSIONAL SURVEYOR

I, TIM C. PAPPAS, NEW MEXICO PROFESSIONAL SURVEYOR NO. 21209, DO HEREBY CERTIFY THAT THIS EASEMENT PLAT AND THE ACTUAL SURVEY ON THE GROUND UPON WHICH IT IS BASED WERE PERFORMED BY ME OR UNDER MY SUPERVISION; THAT I AM RESPONSIBLE FOR THIS SURVEY; THAT THIS SURVEY MEETS THE MINIMUM STANDARDS FOR SURVEYING IN NEW MEXICO; AND THAT IT IS TRUE AND CORRECT TO THE BEST OF MY KNOWLEDGE AND I FURTHER CERTIFY THAT THIS SURVEY IS NOT A LAND DIVISION OR SUBDIVISION AS DEFINED IN THE NEW MEXICO SUBDIVISION ACT AND THAT THIS INSTRUMENT IS AN EASEMENT PLAT OF A PROPOSED EASEMENT.

9 APRIL 2024

TIM C. PAPPAS, N.M. P.L.S. **No.21209**

SURVEY DATE: 04/04/2024
JOB NO.: B23.EOG.0107
DRAFT: KS
SHEET: 1 OF 1

eog resources

NEVER BETTER TO AIR BISCUIT PROPOSED LGL LINE REV 1
SEC. 16, T-22-S, R-32-E, N.M.P.M.,
LEA COUNTY, NEW MEXICO

ASCENT GEOMATICS SOLUTIONS
PETROLEUM FIELD SERVICES, LLC
DBA: ASCENT GEOMATICS SOLUTIONS
8620 WOLFF CT.
WESTMINSTER, CO 80031
OFFICE: (303) 928-7128

PLAT: \AGSFS\PROJECTS\EOG_B23\107\PRODROW_EXHIBITS\UTILITIES\LGL\EP_NEVER_BETTER_TO_AIR_BISCUIT_LGL_LINE_R1 4/8/24 6:35 PM Ksarmiento

SECTION 14, TOWNSHIP 22 SOUTH, RANGE 32 EAST,
LEA COUNTY, NEW MEXICO

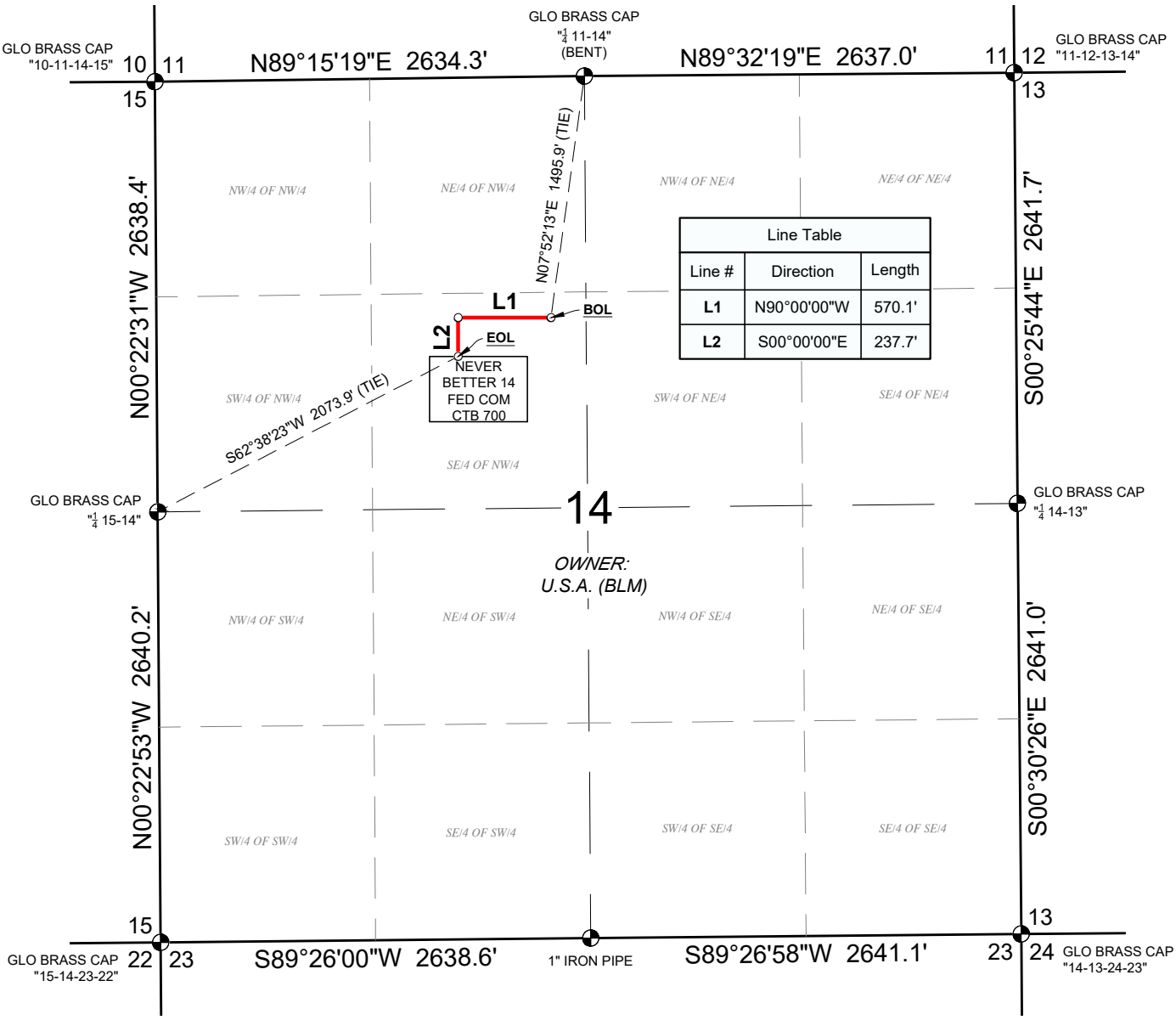

Line Table		
Line #	Direction	Length
L1	N90°00'00"W	570.1'
L2	S00°00'00"E	237.7'

NEVER BETTER TO AIR BISCUIT PROPOSED OVERHEAD ELECTRIC LINE

CENTERLINE DESCRIPTION

A STRIP OF LAND 30 FEET IN WIDTH AND 807.8 FEET, 49.0 RODS OR 0.2 MILES IN LENGTH, SITUATED IN SECTION 14, TOWNSHIP 22 SOUTH, RANGE 32 EAST, N.M.P.M., LEA COUNTY, NEW MEXICO, AND BEING 15 FEET ON EACH SIDE OF THE SURVEY OF CENTERLINE AS SHOWN HEREON.

- PROPOSED OVERHEAD ELECTRIC LINE
- POINT FOR BEGIN/END OR ANGLE POINT
- FOUND MONUMENT AS SHOWN

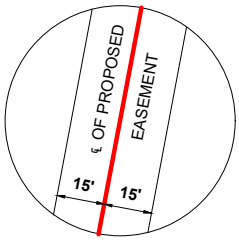

TYPICAL
RIGHT-OF-WAY EASEMENT

0 500' 1000'
SCALE: 1"= 1000'

NOTES:
- BEARINGS, COORDINATES, AND DISTANCES SHOWN HEREON ARE BASED ON THE NEW MEXICO STATE PLANE COORDINATE SYSTEM, EAST ZONE, NAD 83- 2011 (EPOCH 2010) FRAMEWORK, AS DERIVED BY OPUS SOLUTION. THE ELEVATIONS SHOWN HEREON AREA BASED ON NAVD 88.
- LAND OWNERSHIP INFORMATION REFLECTED HEREON WAS PROVIDED BY CLIENT AND/OR OBTAINED FROM PUBLIC DOMAIN DATA, NO INDEPENDENT OWNERSHIP SEARCH WAS PERFORMED BY ASCENT



I, TIM C. PAPPAS, NEW MEXICO PROFESSIONAL SURVEYOR NO. 21209, DO HEREBY CERTIFY THAT THIS EASEMENT PLAT AND THE ACTUAL SURVEY ON THE GROUND UPON WHICH IT IS BASED WERE PERFORMED BY ME OR UNDER MY SUPERVISION; THAT I AM RESPONSIBLE FOR THIS SURVEY; THAT THIS SURVEY MEETS THE MINIMUM STANDARDS FOR SURVEYING IN NEW MEXICO; AND THAT IT IS TRUE AND CORRECT TO THE BEST OF MY KNOWLEDGE AND I FURTHER CERTIFY THAT THIS SURVEY IS NOT A LAND DIVISION OR SUBDIVISION AS DEFINED IN THE NEW MEXICO SUBDIVISION ACT AND THAT THIS INSTRUMENT IS AN EASEMENT PLAT OF A PROPOSED EASEMENT.

6 MAR 2024

TIM C. PAPPAS, N.M. P.L.S. **No.21209**

SURVEY DATE: 02/29/2024
JOB NO.: B23.EOG.0107

DRAFT: KS
SHEET: 1 OF 1

eog resources

NEVER BETTER TO AIR BISCUIT
PROPOSED OVERHEAD ELECTRIC LINE
SEC. 14, T-22-S, R-32-E, N.M.P.M.,
LEA COUNTY, NEW MEXICO

ASCENT GEOMATICS SOLUTIONS

PETROLEUM FIELD SERVICES, LLC
DBA: ASCENT GEOMATICS SOLUTIONS
8620 WOLFF CT.
WESTMINSTER, CO 80031
OFFICE: (303) 928-7128

PLAT: \AGSFS\PROJECTS\EOG_B230107\PRODROW_EXHIBITS\UTILITIES\OHEIEP_NEVER_BETTER_TO_AIR_BISCUIT_OHE_LINE 3/6/24 3:24 PM Jbryant

SECTION 15, TOWNSHIP 22 SOUTH, RANGE 32 EAST,
LEA COUNTY, NEW MEXICO

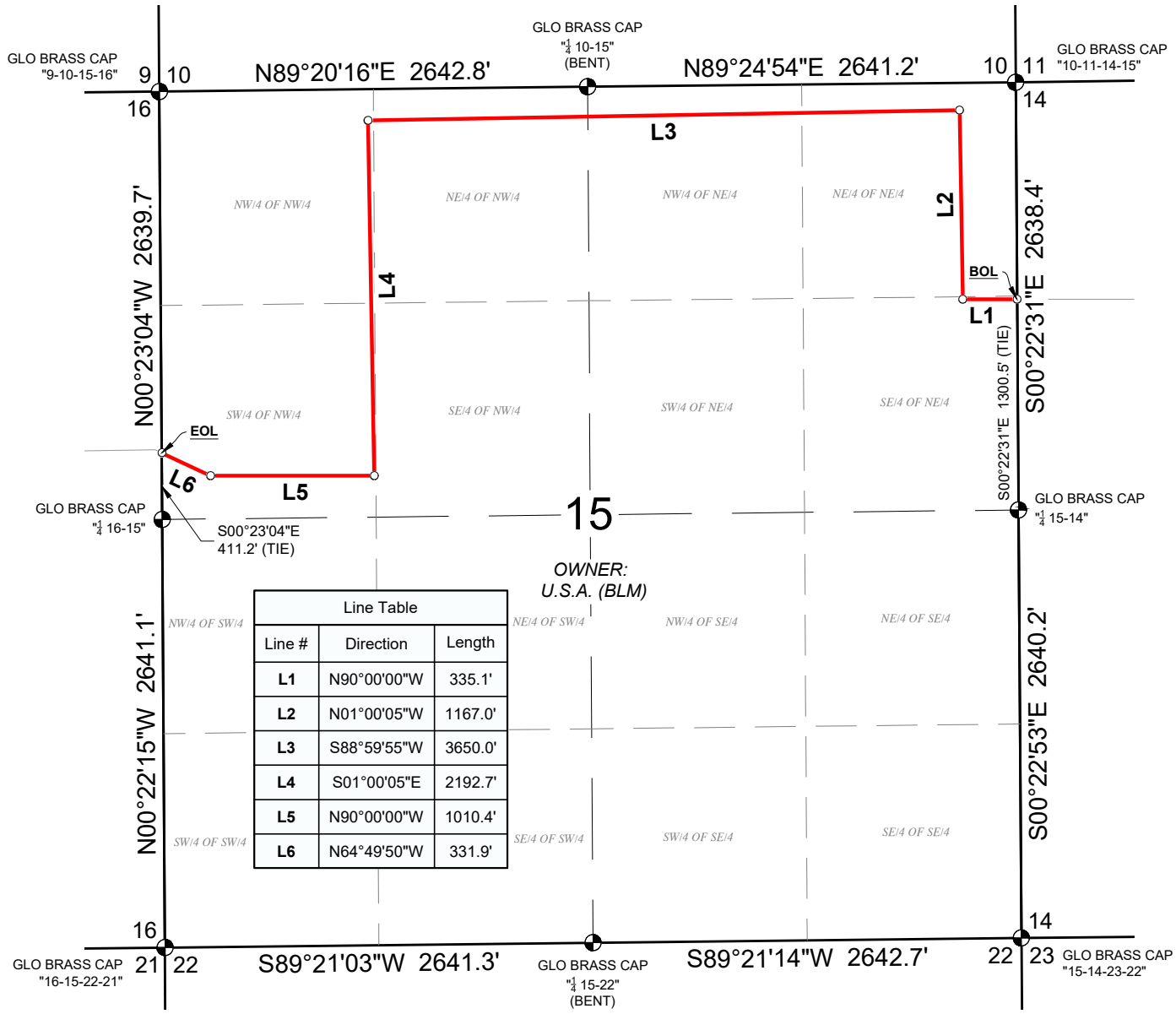

Line Table		
Line #	Direction	Length
L1	N90°00'00"W	335.1'
L2	N01°00'05"W	1167.0'
L3	S88°59'55"W	3650.0'
L4	S01°00'05"E	2192.7'
L5	N90°00'00"W	1010.4'
L6	N64°49'50"W	331.9'

NEVER BETTER TO AIR BISCUIT PROPOSED OIL LINE
CENTERLINE DESCRIPTION

A STRIP OF LAND 30 FEET IN WIDTH AND 8687.1 FEET, 526.5 RODS OR 1.6 MILES IN LENGTH, SITUATED IN SECTION 15, TOWNSHIP 22 SOUTH, RANGE 32 EAST, N.M.P.M., LEA COUNTY, NEW MEXICO, AND BEING 15 FEET ON EACH SIDE OF THE SURVEY OF CENTERLINE AS SHOWN HEREON.

- PROPOSED OIL LINE
- PROPOSED TIE-IN OIL LINE
- POINT FOR BEGIN/END OR ANGLE POINT
- FOUND MONUMENT AS SHOWN

NOTES:
- BEARINGS, COORDINATES, AND DISTANCES SHOWN HEREON ARE BASED ON THE NEW MEXICO STATE PLANE COORDINATE SYSTEM, EAST ZONE, NAD 83- 2011 (EPOCH 2010) FRAMEWORK, AS DERIVED BY OPUS SOLUTION. THE ELEVATIONS SHOWN HEREON AREA BASED ON NAVD 88.
- LAND OWNERSHIP INFORMATION REFLECTED HEREON WAS PROVIDED BY CLIENT AND/OR OBTAINED FROM PUBLIC DOMAIN DATA, NO INDEPENDENT OWNERSHIP SEARCH WAS PERFORMED BY ASCENT

0 500' 1000'
SCALE: 1"= 1000'

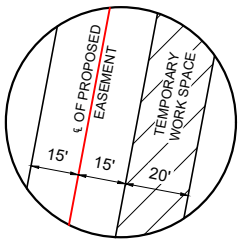

TYPICAL N.T.S.
RIGHT-OF-WAY EASEMENT, TEMPORARY WORK SPACE CONFIGURATION

TIM C. PAPPAS NEW MEXICO 21209 REGISTERED PROFESSIONAL SURVEYOR

I, TIM C. PAPPAS, NEW MEXICO PROFESSIONAL SURVEYOR NO. 21209, DO HEREBY CERTIFY THAT THIS EASEMENT PLAT AND THE ACTUAL SURVEY ON THE GROUND UPON WHICH IT IS BASED WERE PERFORMED BY ME OR UNDER MY SUPERVISION; THAT I AM RESPONSIBLE FOR THIS SURVEY; THAT THIS SURVEY MEETS THE MINIMUM STANDARDS FOR SURVEYING IN NEW MEXICO; AND THAT IT IS TRUE AND CORRECT TO THE BEST OF MY KNOWLEDGE AND I FURTHER CERTIFY THAT THIS SURVEY IS NOT A LAND DIVISION OR SUBDIVISION AS DEFINED IN THE NEW MEXICO SUBDIVISION ACT AND THAT THIS INSTRUMENT IS AN EASEMENT PLAT OF A PROPOSED EASEMENT.

9 APRIL 2024

TIM C. PAPPAS, N.M. P.L.S. **No.21209**

SURVEY DATE: 04/04/2024
JOB NO.: B23.EOG.0107

DRAFT: KS
SHEET: 1 OF 1

eog resources

NEVER BETTER TO AIR BISCUIT PROPOSED OIL LINE REV 1
SEC. 15, T-22-S, R-32-E, N.M.P.M.,
LEA COUNTY, NEW MEXICO

ASCENT GEOMATICS SOLUTIONS

PETROLEUM FIELD SERVICES, LLC
DBA: ASCENT GEOMATICS SOLUTIONS
8620 WOLFF CT.
WESTMINSTER, CO 80031
OFFICE: (303) 928-7128

PLAT: \AGSFS\PROJECTS\EOG_B23\107\PROD\ROW_EXHIBITS\UTILITIES\OIL\EP_NEVER_BETTER_TO_AIR_BISCUIT_OIL_LINE_R1 4/8/24 7:11 PM Ksarmiento

SECTION 16, TOWNSHIP 22 SOUTH, RANGE 32 EAST,
LEA COUNTY, NEW MEXICO

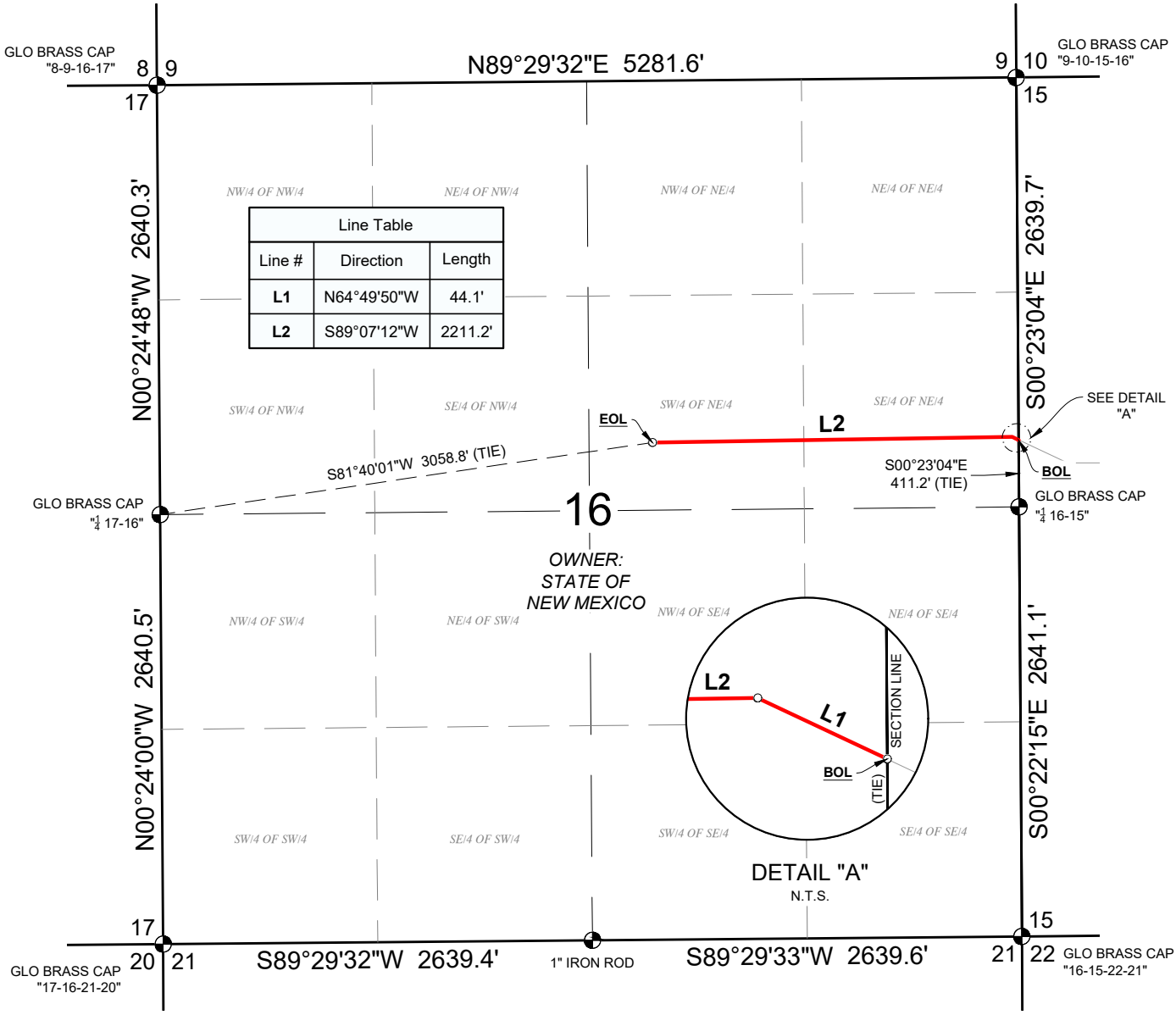

Line Table		
Line #	Direction	Length
L1	N64°49'50"W	44.1'
L2	S89°07'12"W	2211.2'

NEVER BETTER TO AIR BISCUIT PROPOSED OIL LINE
CENTERLINE DESCRIPTION

A STRIP OF LAND 30 FEET IN WIDTH AND 2255.3 FEET OR 136.7 RODS IN LENGTH, 1.6 ACRES SITUATED IN SECTION 16, TOWNSHIP 22 SOUTH, RANGE 32 EAST, N.M.P.M., LEA COUNTY, NEW MEXICO, AND BEING 15 FEET ON EACH SIDE OF THE SURVEY OF CENTERLINE AS SHOWN HEREON.
SE/4 NE/4 = 1324.6 FEET, 80.3 RODS, 0.9 ACRES
SW/4 NE/4 = 930.7 FEET, 56.4 RODS, 0.7 ACRES

- PROPOSED OIL LINE
- PROPOSED TIE-IN OIL LINE
- POINT FOR BEGIN/END OR ANGLE POINT
- FOUND MONUMENT AS SHOWN

NOTES:
- BEARINGS, COORDINATES, AND DISTANCES SHOWN HEREON ARE BASED ON THE NEW MEXICO STATE PLANE COORDINATE SYSTEM, EAST ZONE, NAD 83- 2011 (EPOCH 2010) FRAMEWORK, AS DERIVED BY OPUS SOLUTION. THE ELEVATIONS SHOWN HEREON AREA BASED ON NAVD 88.
- LAND OWNERSHIP INFORMATION REFLECTED HEREON WAS PROVIDED BY CLIENT AND/OR OBTAINED FROM PUBLIC DOMAIN DATA, NO INDEPENDENT OWNERSHIP SEARCH WAS PERFORMED BY ASCENT

0 500' 1000'
SCALE: 1"= 1000'

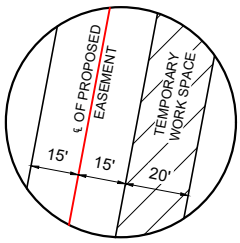

TYPICAL N.T.S.
RIGHT-OF-WAY EASEMENT, TEMPORARY WORK SPACE CONFIGURATION

TIM C. PAPPAS NEW MEXICO 21209 REGISTERED PROFESSIONAL SURVEYOR

I, TIM C. PAPPAS, NEW MEXICO PROFESSIONAL SURVEYOR NO. 21209, DO HEREBY CERTIFY THAT THIS EASEMENT PLAT AND THE ACTUAL SURVEY ON THE GROUND UPON WHICH IT IS BASED WERE PERFORMED BY ME OR UNDER MY SUPERVISION; THAT I AM RESPONSIBLE FOR THIS SURVEY; THAT THIS SURVEY MEETS THE MINIMUM STANDARDS FOR SURVEYING IN NEW MEXICO; AND THAT IT IS TRUE AND CORRECT TO THE BEST OF MY KNOWLEDGE AND I FURTHER CERTIFY THAT THIS SURVEY IS NOT A LAND DIVISION OR SUBDIVISION AS DEFINED IN THE NEW MEXICO SUBDIVISION ACT AND THAT THIS INSTRUMENT IS AN EASEMENT PLAT OF A PROPOSED EASEMENT.

9 APRIL 2024

TIM C. PAPPAS, N.M. P.L.S. **No.21209**

SURVEY DATE: 04/04/2024
JOB NO.: B23.EOG.0107
DRAFT: KS
SHEET: 1 OF 1

eog resources

NEVER BETTER TO AIR BISCUIT PROPOSED OIL LINE REV 1
SEC. 16, T-22-S, R-32-E, N.M.P.M.,
LEA COUNTY, NEW MEXICO

ASCENT GEOMATICS SOLUTIONS
PETROLEUM FIELD SERVICES, LLC
DBA: ASCENT GEOMATICS SOLUTIONS
8620 WOLFF CT.
WESTMINSTER, CO 80031
OFFICE: (303) 928-7128

PLAT: \AGSFS\PROJECTS\EOG_B23\107\PRODROW_EXHIBITS\UTILITIES\OIL\EP_NEVER_BETTER_TO_AIR_BISCUIT_OIL_LINE_R1 4/8/24 7:10 PM Ksarmiento

SECTION 15, TOWNSHIP 22 SOUTH, RANGE 32 EAST,
LEA COUNTY, NEW MEXICO

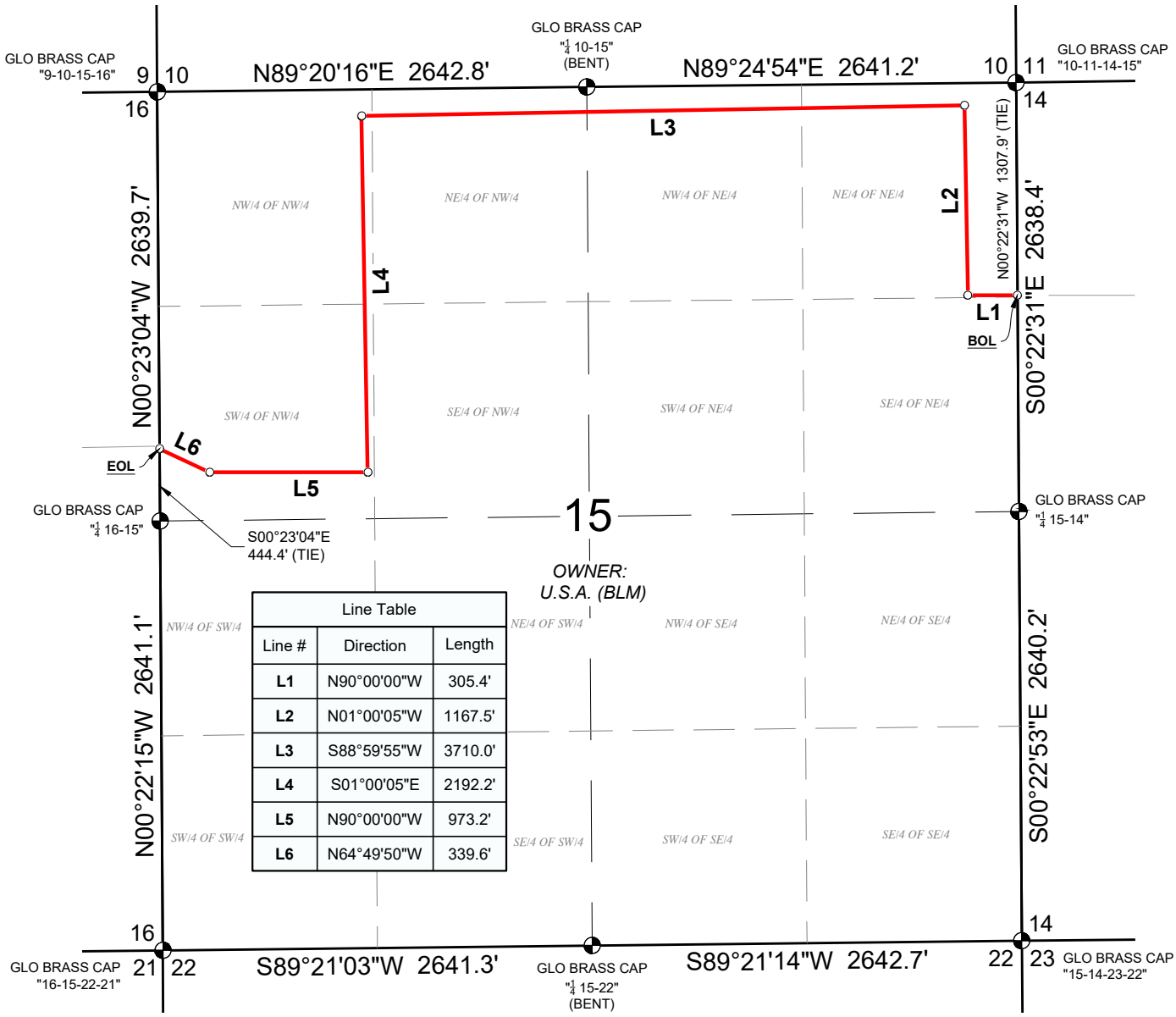

Line Table		
Line #	Direction	Length
L1	N90°00'00"W	305.4'
L2	N01°00'05"W	1167.5'
L3	S88°59'55"W	3710.0'
L4	S01°00'05"E	2192.2'
L5	N90°00'00"W	973.2'
L6	N64°49'50"W	339.6'

NEVER BETTER TO AIR BISCUIT PROPOSED WATER LINE
CENTERLINE DESCRIPTION

A STRIP OF LAND 30 FEET IN WIDTH AND 8687.9 FEET, 526.5 RODS OR 1.6 MILES IN LENGTH, SITUATED IN SECTION 15, TOWNSHIP 22 SOUTH, RANGE 32 EAST, N.M.P.M., LEA COUNTY, NEW MEXICO, AND BEING 15 FEET ON EACH SIDE OF THE SURVEY OF CENTERLINE AS SHOWN HEREON.

- PROPOSED WATER LINE
- PROPOSED TIE-IN WATER LINE
- POINT FOR BEGIN/END OR ANGLE POINT
- FOUND MONUMENT AS SHOWN

NOTES:
- BEARINGS, COORDINATES, AND DISTANCES SHOWN HEREON ARE BASED ON THE NEW MEXICO STATE PLANE COORDINATE SYSTEM, EAST ZONE, NAD 83- 2011 (EPOCH 2010) FRAMEWORK, AS DERIVED BY OPUS SOLUTION. THE ELEVATIONS SHOWN HEREON AREA BASED ON NAVD 88.
- LAND OWNERSHIP INFORMATION REFLECTED HEREON WAS PROVIDED BY CLIENT AND/OR OBTAINED FROM PUBLIC DOMAIN DATA, NO INDEPENDENT OWNERSHIP SEARCH WAS PERFORMED BY ASCENT

0 500' 1000'
SCALE: 1"= 1000'

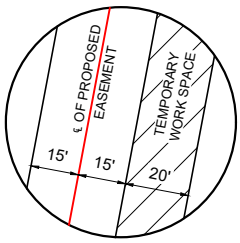

TYPICAL N.T.S.
RIGHT-OF-WAY EASEMENT, TEMPORARY WORK SPACE CONFIGURATION

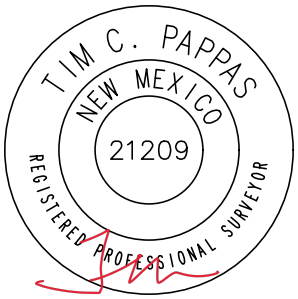

I, TIM C. PAPPAS, NEW MEXICO PROFESSIONAL SURVEYOR NO. 21209, DO HEREBY CERTIFY THAT THIS EASEMENT PLAT AND THE ACTUAL SURVEY ON THE GROUND UPON WHICH IT IS BASED WERE PERFORMED BY ME OR UNDER MY SUPERVISION; THAT I AM RESPONSIBLE FOR THIS SURVEY; THAT THIS SURVEY MEETS THE MINIMUM STANDARDS FOR SURVEYING IN NEW MEXICO; AND THAT IT IS TRUE AND CORRECT TO THE BEST OF MY KNOWLEDGE AND I FURTHER CERTIFY THAT THIS SURVEY IS NOT A LAND DIVISION OR SUBDIVISION AS DEFINED IN THE NEW MEXICO SUBDIVISION ACT AND THAT THIS INSTRUMENT IS AN EASEMENT PLAT OF A PROPOSED EASEMENT.

9 APRIL 2024

TIM C. PAPPAS, N.M. P.L.S. **No.21209**

SURVEY DATE: 04/04/2024
JOB NO.: B23.EOG.0107

DRAFT: KS
SHEET: 1 OF 1

eog resources

NEVER BETTER TO AIR BISCUIT PROPOSED WATER LINE REV 1
SEC. 15, T-22-S, R-32-E, N.M.P.M.,
LEA COUNTY, NEW MEXICO

ASCENT GEOMATICS SOLUTIONS

PETROLEUM FIELD SERVICES, LLC
DBA: ASCENT GEOMATICS SOLUTIONS
8620 WOLFF CT.
WESTMINSTER, CO 80031
OFFICE: (303) 928-7128

PLAT: \AGS\FS\PROJECTS\EOG_B23\107\PROD\ROW_EXHIBITS\UTILITIES\WATER\EP_NEVER_BETTER_TO_AIR_BISCUIT_WATER_LINE_R1 4/8/24 7:08 PM Ksarmiento

SECTION 16, TOWNSHIP 22 SOUTH, RANGE 32 EAST,
LEA COUNTY, NEW MEXICO

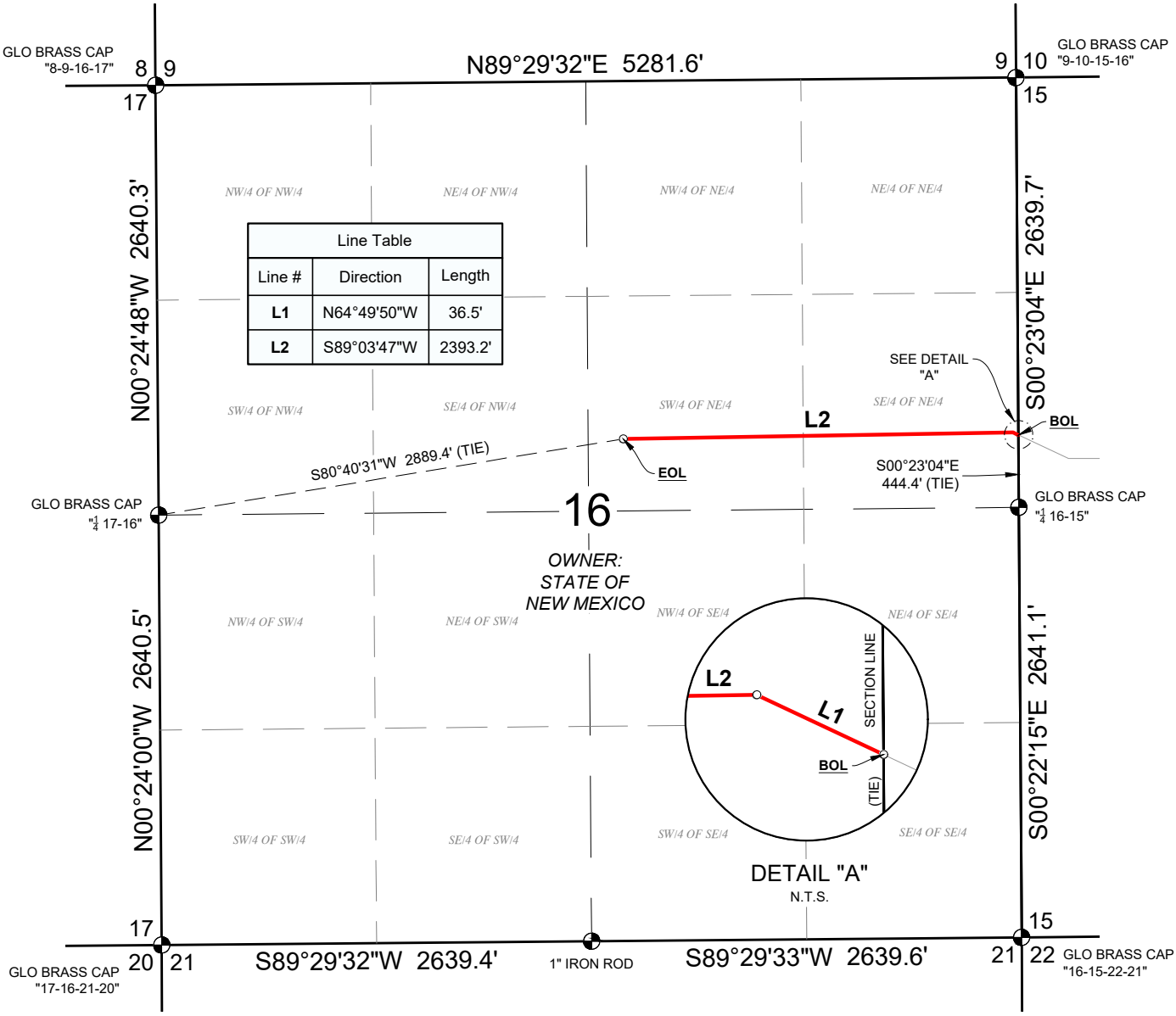

Line Table		
Line #	Direction	Length
L1	N64°49'50"W	36.5'
L2	S89°03'47"W	2393.2'

NEVER BETTER TO AIR BISCUIT PROPOSED WATER LINE

CENTERLINE DESCRIPTION

A STRIP OF LAND 30 FEET IN WIDTH AND 2429.7 FEET OR 147.3 RODS IN LENGTH, 1.7 ACRES SITUATED IN SECTION 16, TOWNSHIP 22 SOUTH, RANGE 32 EAST, N.M.P.M., LEA COUNTY, NEW MEXICO, AND BEING 15 FEET ON EACH SIDE OF THE SURVEY OF CENTERLINE AS SHOWN HEREON.
SE/4 NE/4 = 1323.9 FEET, 80.3 RODS, 0.9 ACRES
SW/4 NE/4 = 1105.8 FEET, 67.0 RODS, 0.8 ACRES

- PROPOSED WATER LINE
- PROPOSED TIE-IN WATER LINE
- POINT FOR BEGIN/END OR ANGLE POINT
- FOUND MONUMENT AS SHOWN

NOTES:
- BEARINGS, COORDINATES, AND DISTANCES SHOWN HEREON ARE BASED ON THE NEW MEXICO STATE PLANE COORDINATE SYSTEM, EAST ZONE, NAD 83- 2011 (EPOCH 2010) FRAMEWORK, AS DERIVED BY OPUS SOLUTION. THE ELEVATIONS SHOWN HEREON AREA BASED ON NAVD 88.
- LAND OWNERSHIP INFORMATION REFLECTED HEREON WAS PROVIDED BY CLIENT AND/OR OBTAINED FROM PUBLIC DOMAIN DATA, NO INDEPENDENT OWNERSHIP SEARCH WAS PERFORMED BY ASCENT

0 500' 1000'
SCALE: 1"= 1000'

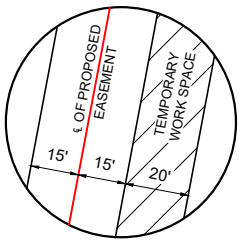

TYPICAL N.T.S.
RIGHT-OF-WAY EASEMENT, TEMPORARY WORK SPACE CONFIGURATION

TIM C. PAPPAS NEW MEXICO 21209 REGISTERED PROFESSIONAL SURVEYOR

I, TIM C. PAPPAS, NEW MEXICO PROFESSIONAL SURVEYOR NO. 21209, DO HEREBY CERTIFY THAT THIS EASEMENT PLAT AND THE ACTUAL SURVEY ON THE GROUND UPON WHICH IT IS BASED WERE PERFORMED BY ME OR UNDER MY SUPERVISION; THAT I AM RESPONSIBLE FOR THIS SURVEY; THAT THIS SURVEY MEETS THE MINIMUM STANDARDS FOR SURVEYING IN NEW MEXICO; AND THAT IT IS TRUE AND CORRECT TO THE BEST OF MY KNOWLEDGE AND I FURTHER CERTIFY THAT THIS SURVEY IS NOT A LAND DIVISION OR SUBDIVISION AS DEFINED IN THE NEW MEXICO SUBDIVISION ACT AND THAT THIS INSTRUMENT IS AN EASEMENT PLAT OF A PROPOSED EASEMENT.

9 APRIL 2024

TIM C. PAPPAS, N.M. P.L.S. **No.21209**

SURVEY DATE: 04/041/2024
JOB NO.: B23.EOG.0107
DRAFT: KS
SHEET: 1 OF 1

eog resources

NEVER BETTER TO AIR BISCUIT PROPOSED WATER LINE REV 1
SEC. 16, T-22-S, R-32-E, N.M.P.M.,
LEA COUNTY, NEW MEXICO

ASCENT GEOMATICS SOLUTIONS
PETROLEUM FIELD SERVICES, LLC
DBA: ASCENT GEOMATICS SOLUTIONS
8620 WOLFF CT.
WESTMINSTER, CO 80031
OFFICE: (303) 928-7128

PLAT: \AGSFS\PROJECTS\EOG_B23\0107\PROD\ROW_EXHIBITS\UTILITIES\WATER\EP_NEVER_BETTER_TO_AIR_BISCUIT_WATER_LINE_R1 4/8/24 7:08 PM Ksarmiento

Never Better 14 Fed Com Water Map

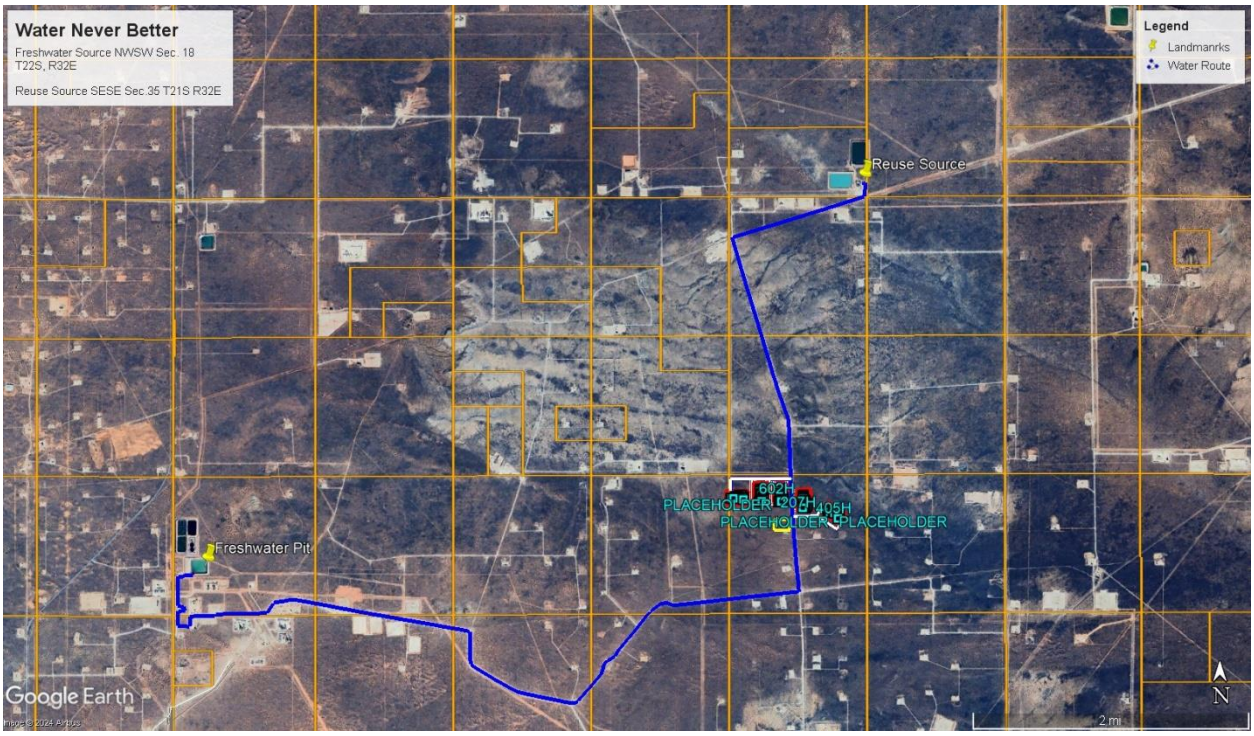

Freshwater will come from Select Services in the NWSW of Section 18, T22S,R32E. It will begin at their facility and go south into Mills Ranch Road. From Mills Ranch it will travel east until it hits the Never Better 14 Fed Com lease road and travel north into the Never Better 14 Fed Com development.

Reuse Water will come from a Solaris Facility in the SESE of Section 35, T21S, R32E. It will begin there and then head southwest along a lease road and then make a turn south east and come straight south into our Never Better 14 Fed Com development.

Never Better 14 Fed Com Caliche Map

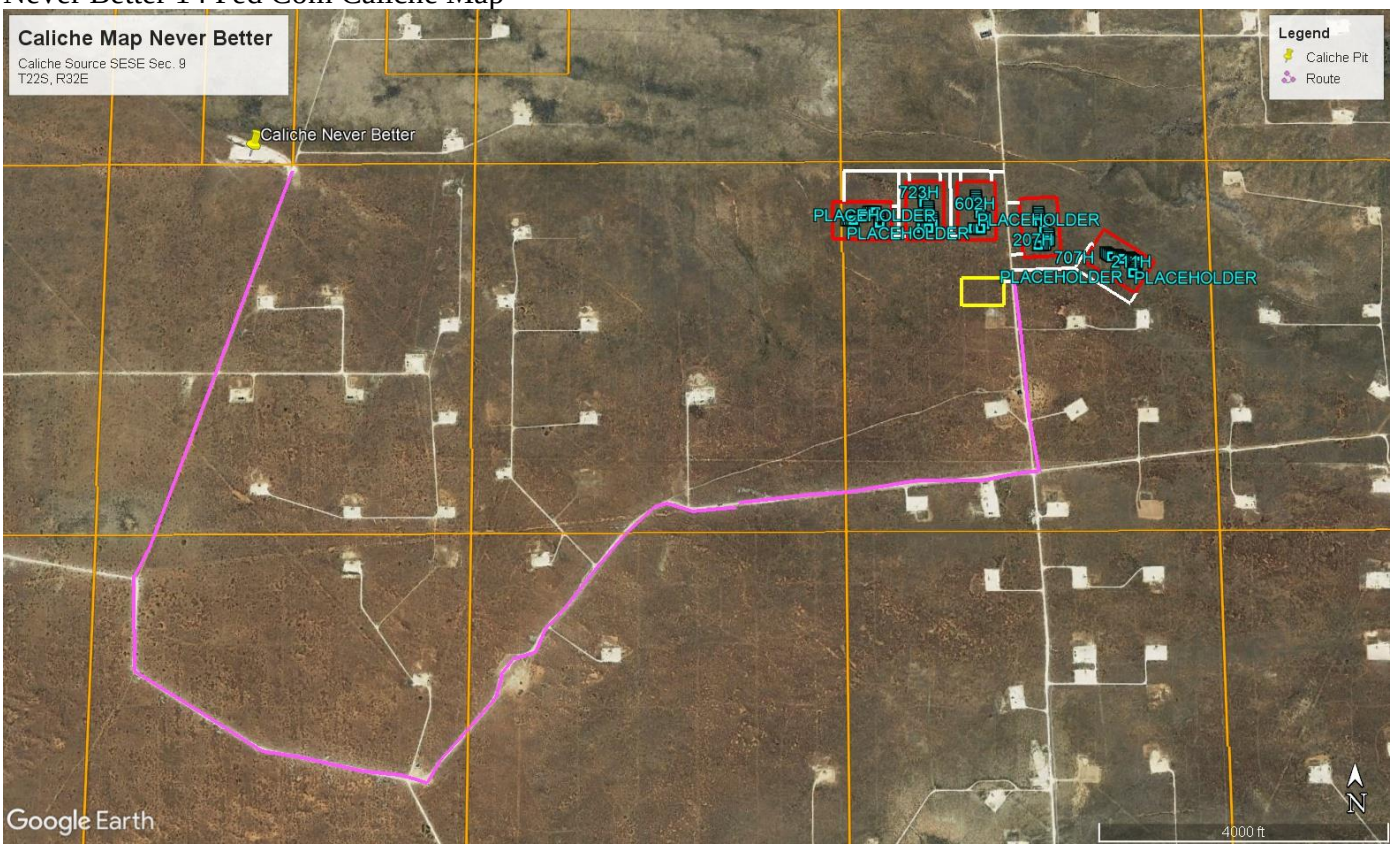

Caliche will come from an MEC Pit in the SESE Sec.9 T22S R32E. It will travel south down the Air Biscuit 16 Fed Com main lease road and will hit Mills Ranch Road. At that point it will travel east until it hits the Never Better 14 Fed Com lease road and will travel north into the development area.

EXHIBIT 2B
PAD LAYOUT

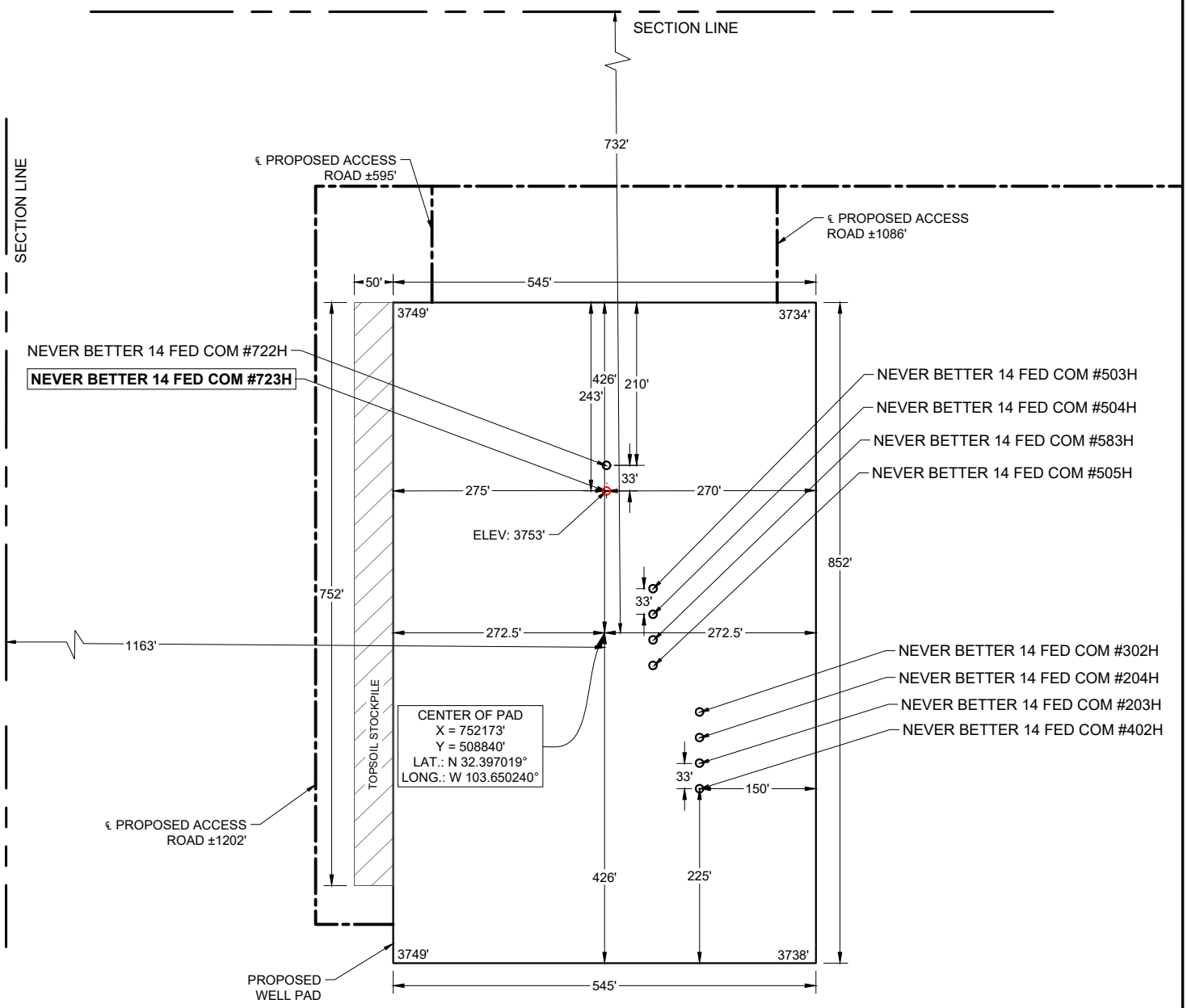

LEASE NAME & WELL NO.: NEVER BETTER 14 FED COM #723H
LATITUDE: N 32.397522° LONG: W 103.650228° ELEVATION: 3753'

SECTION: 14 TWP: 22S RGE: 32E SURVEY: N.M.P.M.
COUNTY: LEA STATE: NM

DESCRIPTION: CENTER OF PAD IS 732' FNL & 1163' FWL

LEGEND

= PROPOSED ACCESS ROAD
= SECTION LINE

eog resources

JOB No.: EOG__B230106

ALL BEARINGS, DISTANCES, AND COORDINATE VALUES CONTAINED HEREIN ARE GRID BASED UPON THE FOLLOWING COORDINATE SYSTEM: NAD83 NEW MEXICO STATE PLANE, EAST ZONE, U.S. SURVEY FEET

DISCLAIMER:
THIS PLOT DOES NOT REPRESENT A MONUMENTED LAND SURVEY AND SHOULD NOT BE RELIED UPON TO DETERMINE BOUNDARY LINES, PROPERTY OWNERSHIP OR OTHER PROPERTY INTERESTS.

SHEET 2 OF 2

0 100 200
SCALE: 1"= 200'

ASCENT GEOMATICS SOLUTIONS
8620 WOLFF CT
WESTMINSTER, CO 80031
OFFICE: (303) 928-7128
WWW.ASCENTGEOMATICS.COM

P:\EOG_B230106\PRODUCTION_Package\Pad\Pad_Bld_Never_Better_14_Fed_Com_Pad\Never_Better_14_Fed_Com_Pad.dwg

Exhibit 4

Well Site Diagram

EOG Resources
Never Better 14 Fed Com #723H

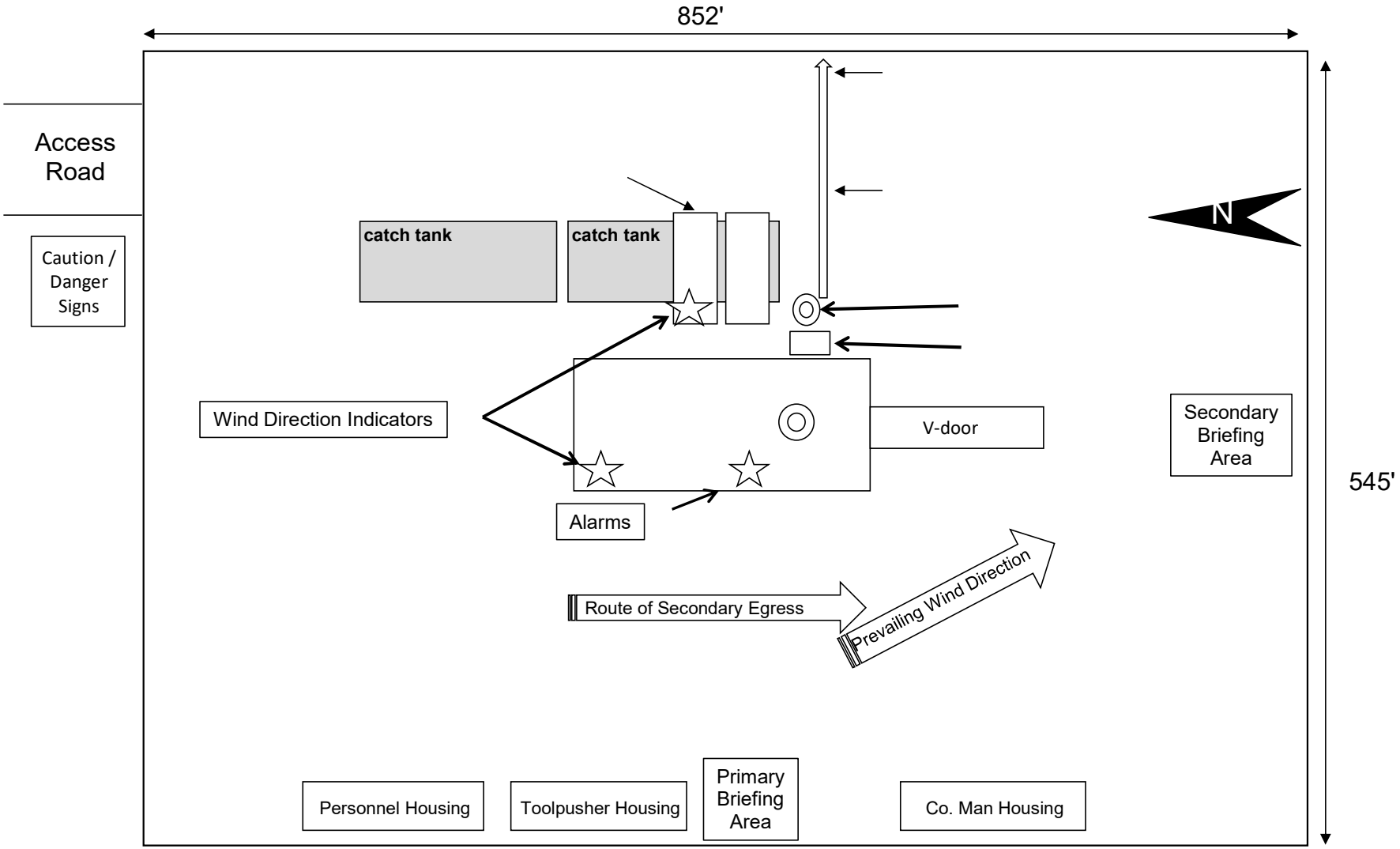

EXHIBIT 2A
WELL LOCATION EXHIBIT

SURFACE LOCATION
NEW MEXICO EAST
NAD 1983
X=752175' Y=509023'
LAT=N32.397522°
LONG=W103.650228°
NAD 1927
X=710993' Y=508963'
LAT=N32.397399°
LONG=W103.649742°
549' FNL 1167' FWL

KOP LOCATION
NEW MEXICO EAST
NAD 1983
X=752985' Y=509533'
LAT=N32.398908°
LONG=W103.647595°
NAD 1927
X=711802' Y=509472'
LAT=N32.398785°
LONG=W103.647108°
50' FNL 1980' FWL

FIRST TAKE POINT
NEW MEXICO EAST
NAD 1983
X=752985' Y=509483'
LAT=N32.398771°
LONG=W103.647595°
NAD 1927
X=711803' Y=509422'
LAT=N32.398648°
LONG=W103.647108°
100' FNL 1980' FWL

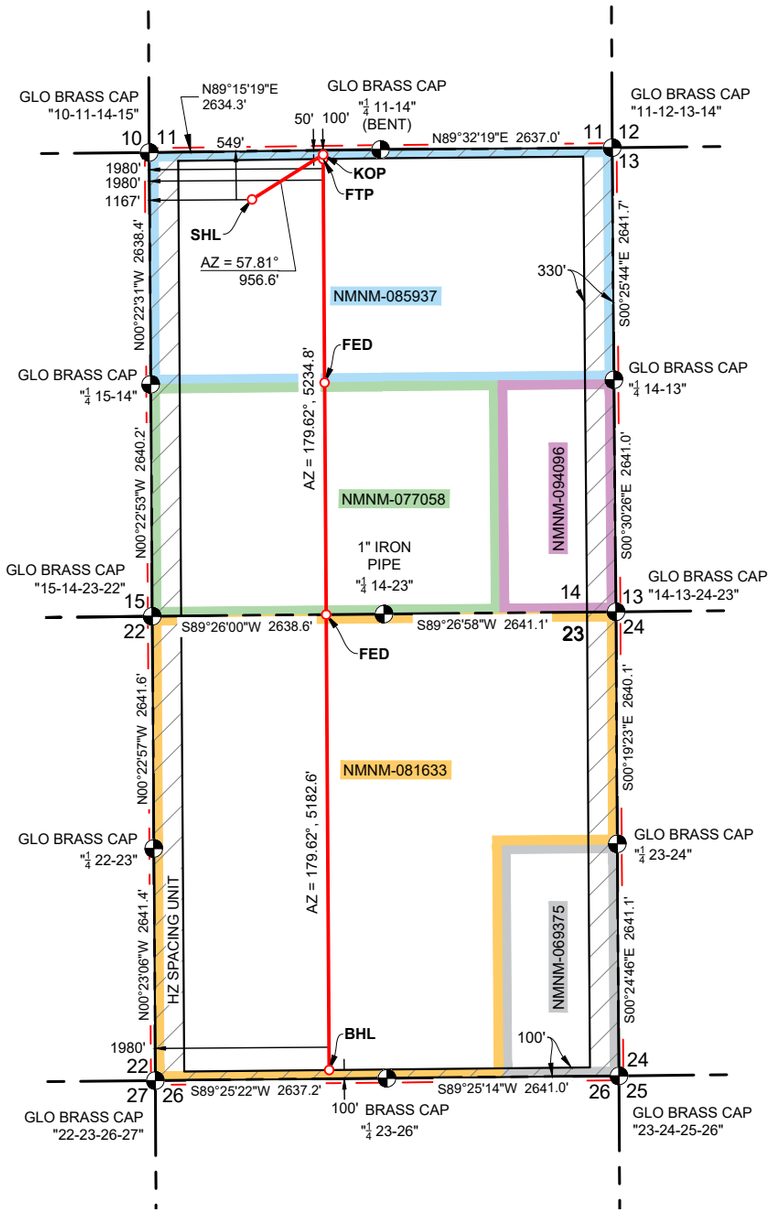

FED PERF. POINT
NEW MEXICO EAST
NAD 1983
X=753002' Y=506938'
LAT=N32.391777°
LONG=W103.647594°
NAD 1927
X=711819' Y=506878'
LAT=N32.391654°
LONG=W103.647107°
1980' FWL

FED PERF. POINT
NEW MEXICO EAST
NAD 1983
X=753019' Y=504298'
LAT=N32.384520°
LONG=W103.647592°
NAD 1927
X=711837' Y=504238'
LAT=N32.384397°
LONG=W103.647106°
1980' FWL

LOWER MOST PERF./ BOTTOM HOLE LOCATION
NEW MEXICO EAST
NAD 1983
X=753054' Y=499116'
LAT=N32.370274°
LONG=W103.647587°
NAD 1927
X=711871' Y=499055'
LAT=N32.370151°
LONG=W103.647101°
100' FSL 1980' FWL

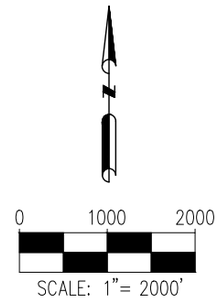

DETAIL VIEW
SCALE: 1" = 600'

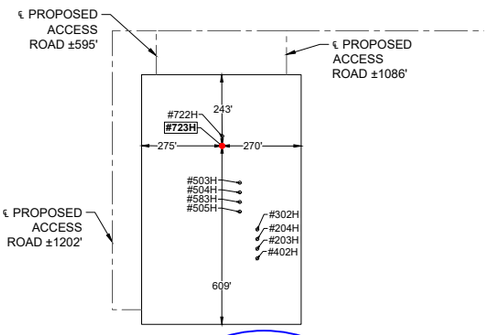

LEASE NAME & WELL NO.: NEVER BETTER 14 FED COM #723H
LATITUDE: N 32.397522° LONG: W 103.650228° ELEVATION: 3753'

SECTION: 14 TWP: 22 S RGE: 32 E SURVEY: N.M.P.M.
COUNTY: LEA STATE: NM

DESCRIPTION: 549' FNL & 1167' FWL

DISTANCE & DIRECTION:
FROM THE INTERSECTION OF MILLS RANCH ROAD & RED ROAD, TRAVEL NORTHEAST ON MILLS RANCH ROAD ±1.61 MILES; THENCE NORTHEAST (RIGHT) ON AN EXISTING LEASE ROAD ±2.51 MILES; THENCE SOUTH (RIGHT) ON AN EXISTING LEASE ROAD ±3.03 MILES; THENCE NORTH (LEFT) ON AN EXISTING LEASE ROAD ±0.82 MILES; THENCE WEST (LEFT) ON PROPOSED ACCESS ROAD ±936 FEET; THENCE SOUTH (LEFT) ON PROPOSED ACCESS ROAD ±150 FEET TO THE EDGE OF THE PAD.
(PROPOSED ACCESS ROAD LENGTH = ±1086')

eog resources

JOB No.: EOG_B230106

NOTE:
ALL BEARINGS, DISTANCES, AND COORDINATE VALUES CONTAINED HEREIN ARE GRID BASED UPON THE FOLLOWING COORDINATE SYSTEM: NAD83 NEW MEXICO STATE PLANE, EAST ZONE, U.S. SURVEY FEET.
DISCLAIMER:
THIS PLOT DOES NOT REPRESENT A MONUMENTED LAND SURVEY AND SHOULD NOT BE RELIED UPON TO DETERMINE BOUNDARY LINES, PROPERTY OWNERSHIP OR OTHER PROPERTY INTERESTS.



5 FEB 2024

TIM C. PAPPAS, N.M. P.L.S. No. 21209

ASCENT GEOMATICS SOLUTIONS
8620 WOLFF CT.
WESTMINSTER, CO 80031
OFFICE: (303) 928-7128
WWW.ASCENTGEOMATICS.COM

P:\EOG_B230106\PROJ\C102_PackageC102_WLE10_Never_Better_14_Fed_Com_C102_WLE_723H.dwg jBRYANT 2/5/2024 2:22 PM

EXHIBIT 2C
RECLAMATION DIAGRAM

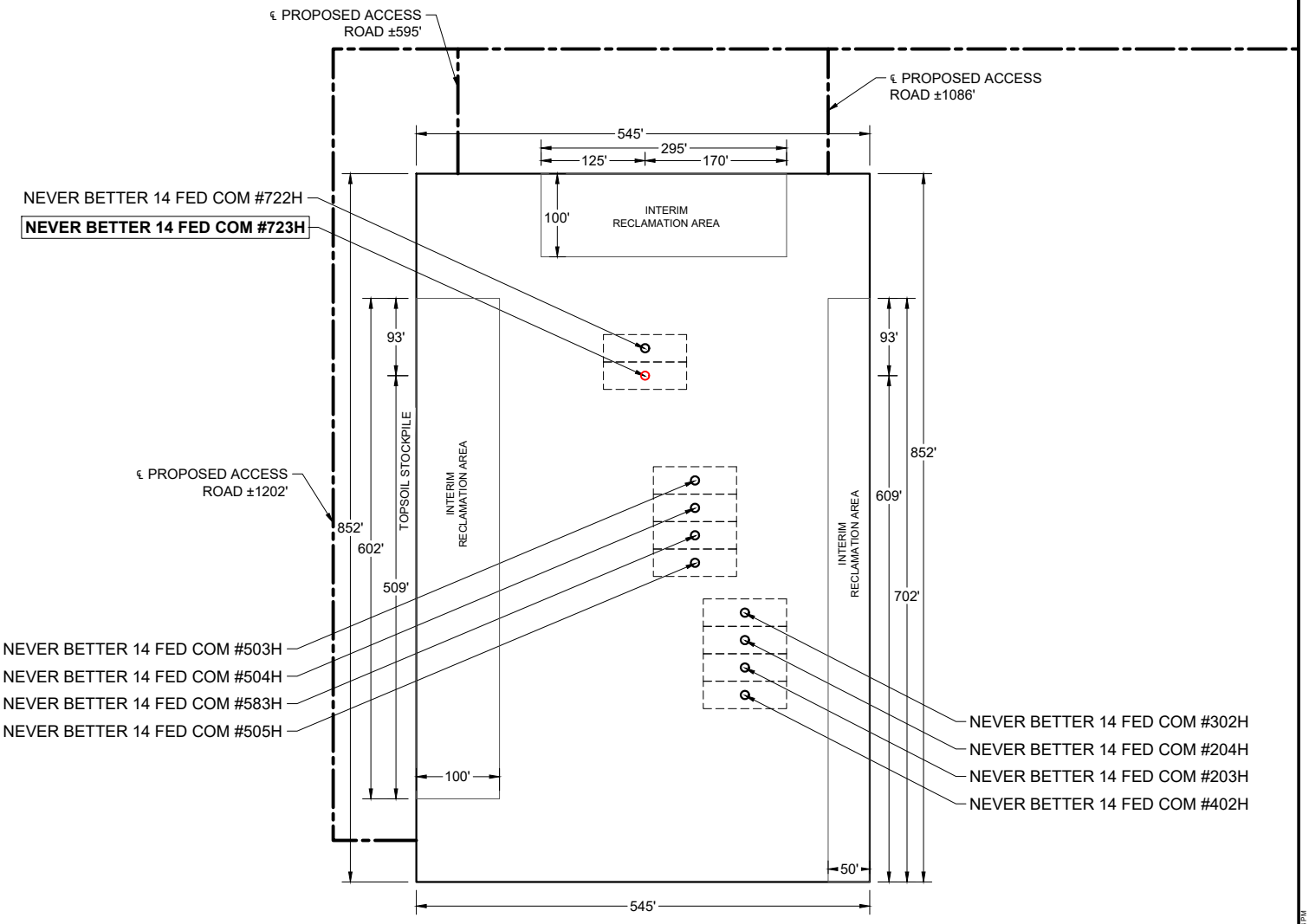

LEASE NAME & WELL NO.: NEVER BETTER 14 FED COM #723H
LATITUDE: N 32.397522° LONG: W 103.650228° ELEVATION: 3753'

SECTION: 14 TWP: 22S RGE: 32E SURVEY: N.M.P.M.
COUNTY: LEA STATE: NM

DESCRIPTION: CENTER OF PAD IS 732' FNL & 1163' FWL

eog resources

JOB No.: EOG_B230106

ALL BEARINGS, DISTANCES, AND COORDINATE VALUES CONTAINED HEREIN ARE GRID BASED UPON THE FOLLOWING COORDINATE SYSTEM: NAD83 NEW MEXICO STATE PLANE, EAST ZONE, U.S. SURVEY FEET.

DISCLAIMER:
THIS PLOT DOES NOT REPRESENT A MONUMENTED LAND SURVEY AND SHOULD NOT BE RELIED UPON TO DETERMINE BOUNDARY LINES, PROPERTY OWNERHIP OR OTHER PROPERTY INTERESTS.

N

0 100 200
SCALE: 1"= 200'

ASCENT GEOMATICS SOLUTIONS
8620 WOLFF CT
WESTMINSTER, CO 80031
OFFICE: (303) 928-7128
WWW.ASCENTGEOMATICS.COM

P:\EOG_B230106\PRODUCTS\2_Package\Reclamation_Diagrams\PAD_B\7_Never_Better_14_Fed_Com_Reclamation_Diagram_723H.dwg JBRYANT 11/27/2024 12:24 PM

EXHIBIT 1
LOCATION & ELEVATION VERIFICATION MAP



LEASE NAME & WELL NO.: NEVER BETTER 14 FED COM #723H
LATITUDE: N 32.397522 LONG: W 103.650228 ELEVATION: 3753'

SECTION: 14 TWP: 22S RGE: 32E SURVEY: N.M.P.M.
COUNTY: LEA STATE: NM

DESCRIPTION: 549' FNL & 1167' FWL

S.H.L.
U.M.P.; L.M.P.; B.H.L.
Bore Line
Section
Township

eog resources

JOB No.: EOG_B230106

NOTE:
ALL BEARINGS, DISTANCES, AND COORDINATE VALUES CONTAINED HEREIN ARE GRID BASED UPON THE FOLLOWING COORDINATE SYSTEM: NAD83 NEW MEXICO STATE PLANE, EAST ZONE, U.S. SURVEY FEET

DISCLAIMER:
THIS PLOT DOES NOT REPRESENT A MONUMENTED LAND SURVEY AND SHOULD NOT BE RELIED UPON TO DETERMINE BOUNDARY LINES, PROPERTY OWNERSHIP OR OTHER PROPERTY INTERESTS.

N

0 2,000 4,000

SCALE: 1"=4,000'

ASCENT GEOMATICS SOLUTIONS
8620 WOLFF COURT
WESTMINSTER, CO 80031
OFFICE: (303) 928-7128
WWW.ASCENTGEOMATICS.COM

C:\GIS\Projects\EOG\PROJ\EOG_Fed_Pkg 1/11/2024 12:51 PM

Surface Use Plan of Operations

Introduction

The following surface use plan of operations will be followed and carried out once the APD is approved. No other disturbance will be created other than what was submitted in this surface use plan. If any other surface disturbance is needed after the APD is approved, a BLM approved sundry notice or right of way application will be acquired prior to any new surface disturbance.

Before any surface disturbance is created, stakes or flagging will be installed to mark boundaries of permitted areas of disturbance, including soils storage areas. As necessary, slope, grade, and other construction control stakes will be placed to ensure construction in accordance with the surface use plan. All boundary markers will be maintained in place until final construction cleanup is completed. If disturbance boundary markers are disturbed or knocked down, they will be replaced before construction proceeds.

If terms and conditions are attached to the approved APD and amend any of the proposed actions in this surface use plan, we will adhere to the terms and conditions.

1. Existing Roads

a. The existing access road route to the proposed project is depicted on NEVER BETTER 14 FED COM 723H VICINITY. Improvements to the driving surface will be done where necessary. No new surface disturbance will be done, unless otherwise noted in the New or Reconstructed Access Roads section of this surface use plan..

b. The existing access road route to the proposed project does cross lease boundaries and a BLM road right-of-way will be acquired from the BLM prior to construction activities.

c. The operator will improve or maintain existing roads in a condition the same as or better than before operations begin. The operator will repair pot holes, clear ditches, repair the crown, etc. All existing structures on the entire access route such as cattleguards, other range improvement projects, culverts, etc. will be properly repaired or replaced if they are damaged or have deteriorated beyond practical use.

d. We will prevent and abate fugitive dust as needed, whether created by vehicular traffic, equipment operations, or wind events. BLM written approval will be acquired before application of surfactants, binding agents, or other dust suppression chemicals on roadways.

2. New or Reconstructed Access Roads

a. An access road will be needed for this proposed project. See the survey plat for the location of the access road.

b. The length of access road needed to be constructed for this proposed project is about 2111 feet.

c. The maximum driving width of the access road will be 30 feet. The maximum width of surface disturbance when constructing the access road will not exceed 25 feet. All areas outside of the driving surface will be revegetated.

d. The access road will be constructed with 6 inches of compacted CALICHE.

e. When the road travels on fairly level ground, the road will be crowned and ditched with a 2% slope from the tip of the road crown to the edge of the driving surface. The ditches will be 3 feet wide with 3:1 slopes. See Road Cross Section diagram below.

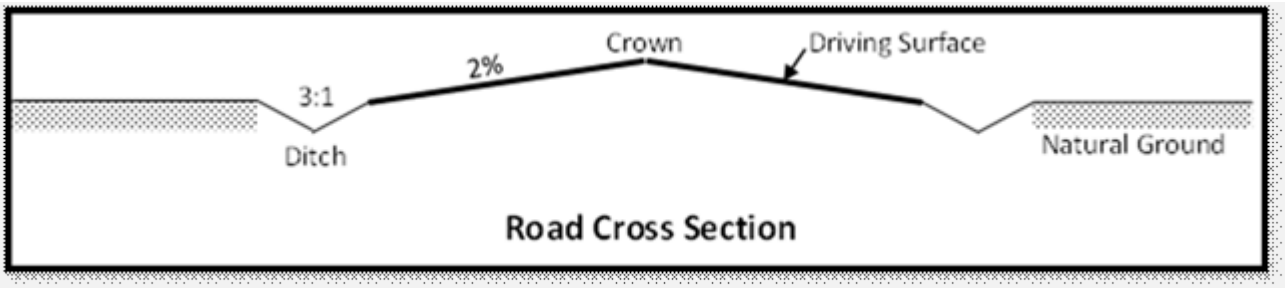

f. The access road will be constructed with a ditch on each side of the road.

g. The maximum grade for the access road will be 6 percent.

h. No turnouts will be constructed on the proposed access road.

i. No cattleguards will be installed for this proposed access road.

j. No BLM right-of-way grant is needed for the construction of this access road.

k. No culverts will be constructed for this proposed access road.

l. No low water crossings will be constructed for the access road.

m. Since the access road is on level ground, no lead-off ditches will be constructed for the proposed access road.

n. Newly constructed or reconstructed roads, on surface under the jurisdiction of the Bureau of Land Management, will be constructed as outlined in the BLM "Gold Book" and to meet the standards of the anticipated traffic flow and all anticipated weather requirements as needed. Construction will include ditching, draining, crowning and capping or sloping and dipping the roadbed as necessary to provide a well-constructed and safe road.

3. Location of Existing Wells

a. NEVER BETTER 14 FED COM 723H MILE RADIUS of the APD depicts all known wells within a one mile radius of the proposed well.

b. There is no other information regarding wells within a one mile radius.

4. Location of Existing and/or Proposed Production Facilities

SEE ELECTRICAL ATTACHMENT

a. All permanent, lasting more than 6 months, above ground structures including but not limited to pumpjacks, storage tanks, barrels, pipeline risers, meter housing, etc. that are not subject to safety requirements will be painted a non-reflective paint color, Shale Green, from the BLM Standard Environmental Colors chart, unless another color is required in the APD Conditions of Approval.

b. If any type of production facilities are located on the well pad, they will be strategically placed to allow for maximum interim reclamation, recontouring, and revegetation of the well location.

c. A production facility is proposed to be installed on the proposed well location. Production from the well will be processed on site in the production facility. NEVER BETTER 14 FED COM CTB depicts the location of the production facilities as they relate to the well and well pad.

d. The proposed production facility will have a secondary containment structure that is constructed to hold the capacity of 1-1/2 times the largest tank, plus freeboard to account for percipitation, unless more stringent protective requirements are deemed necessary.

e. NEVER BETTER 14 FED COM INFRASTRUCTURE MAP/SKETCH depicts the production facility as well.

f. A pipeline to transport production from the proposed well to the production facility will be installed.

i. We plan to install a 6 inch buried FLEXPIPE/FLEXSTEEL pipeline from the proposed well to the offsite production facility. The proposed length of the pipeline will be 1791 feet. The working pressure of the pipeline will be about 1440 psi. A 30 feet wide work area will be needed to install the buried pipeline. In areas where blading is allowed, topsoil will be stockpiled and separated from the excavated trench mineral material. Final reclamation procedures will match the procedures in Plans for Surface Reclamation. When the excavated soil is backfilled, it will be compacted to prevent subsidence. No berm over the pipeline will be evident.

ii. NEVER BETTER 14 FED COM INFRASTRUCTURE MAP/SKETCH depicts the proposed production pipeline route from the well to the existing production facility.

iii. Since the proposed pipeline crossess lease boundaries, a right of way grant will be acquired prior to installation of the proposed pipeline.

If any plans change regarding the production facility or other infrastructure (pipeline, electric line, etc.), we will submit a sundry notice or right of way (if applicable) prior to installation or construction.

Electric Line(s)

a. We plan to install an overhead electric line for the proposed well. The proposed length of the electric line will be 10 feet. NEVER BETTER 14 FED COM INFRASTRUCTURE MAP/SKETCH depicts the location of the proposed electric line route. The electric line will be construction to provide protection from raptor electrocution.

b. The proposed electric line does not cross lease boundaries, so a right of way grant will not need to be acquired from the BLM.

5. Location and Types of Water

a. The source and location of the water supply are as follows: The source and location of the water supply are as follows: This location will be drilled using a combination of water mud systems as outlined in the drilling program (i) Water will be obtained from commercial water stations in the area and hauled to the location by trucks using existing and proposed roads as depicted on the road map attached (ii) Water may be supplied from frac ponds and transported to the location by temporary above ground surface lines a shown on the map
EOG plans to utilize up to six 4 inch polyethylene or layflat lines and up to six 12 inch layflat lines to transport fresh water Freshwater is defined as containing less than 10_000 mg_I Total Dissolved Solids (TDS)_ exhibiting no petroleum sheen when standing_ and not previously used in mechanical processes that expose it to heavy metals or other potential toxins
EOG plans to utilize up to six 4 inch polyethylene or layflat lines and up to six 12 inch layflat lines to transport treated produced water is defined as the reconditioning of produced water to a reusable form and may include mechanical and chemical processes
Freshwater Source:
FRESHWATER PIT_ NWSW SECTION 18_ TOWNSHIP 22 SOUTH_ RANGE 32 EAST
Treated Produced Water Source:
REUSE PIT_ SESE SECTION 35_ TOWNSHIP 21 SOUTH_ RANGE 32 EAST
Temporary surface lines would originate from a single or multiple water source locations in the surrounding area of the proposed action and be temporarily laid above ground with minimal disturbance
Temporary surface line(s) shall be laid no more than 10 feet from the edge of the existing disturbance (ie_ edge of bar_borrow ditch_ road surface or two track road_ or other man made addition to the landscape) A push off arm

or another mechanism will be used All vehicle equipment will remain within the existing disturbance
Map or maps showing the locations of the temporary surface lines will be provided with the APD and included in the Environmental Assessment An electronic map file (shape file or KMZ file) shall be submitted with the Environmental Assessment.

b. NEVER BETTER 14 FED COM WATER AND CALICHE MAP depicts the proposed route for a 12 inch LAYFLAT AND POLYLINES temporary (<90 days) water pipeline supplying water for drilling operations.

6. Construction Material

a. Caliche will be supplied from pits shown on the attached caliche source map.
Caliche utilized for the drilling pad will be obtained either from an existing approved mineral pit, or by benching into a hill, which will allow the pad to be level with existing caliche from the cut, or extracted by "Flipping" the well location. A mineral material permit will be obtained from BLM prior to excavating any caliche on Federal Lands. Amount will vary for each pad. The procedure for "Flipping" a well location is as follows:
*□
-An adequate amount of topsoil/root zone (usually top 6 inches of soil) will be stripped from the proposed well location and stockpiled along the side of the well location as depicted on the well site diagram/survey plat.
-An area will be used within the proposed well site dimensions to excavate caliche.
Subsoil will be removed and stockpiled within the surveyed well pad dimensions.
-Once caliche/surfacing mineral is found, the mineral material will be excavated and stockpiled within the approved drilling pad dimensions.
-Then, subsoil will be pushed back in the excavated hole and caliche will be spread accordingly across the entire well pad and road (if available).
-Neither caliche nor subsoil will be stockpiled outside the well pad dimensions. Topsoil will be stockpiled along the edge of the pad as depicted in the Well Site Layout or survey plat.
*□
If no caliche is found onsite, caliche will be hauled in from a BLM-approved caliche pit or other established mineral pit. A BLM mineral material permit will be acquired before obtaining mineral material from BLM pits or federal land.

7. Methods for Handling Waste SEE SECTION SEVEN ATTACHMENT

a. Drilling fluids and produced oil and water from the well during drilling and completion operations will be stored safely and disposed of properly in an NMOCD approved disposal facility.

b. Garbage and trash produced during drilling and completion operations will be collected in a trash container and disposed of properly at a state approved disposal facility. All trash on and around the well site will be collected for disposal.

c. Human waste and grey water will be properly contained and disposed of properly at a state approved disposal facility.

d. After drilling and completion operations, trash, chemicals, salts, frac sand and other waste material will be removed and disposed of properly at a state approved disposal facility.

e. The well will be drilled utilizing a closed loop system. Drill cutting will be properly disposed of into steel tanks and taken to an NMOCD approved disposal facility.

8. Ancillary Facilities

a. No ancillary facilities will be needed for this proposed project.

9. Well Site Layout

a. The following information is presented in the well site survey plat or diagram:

i. reasonable scale (near 1":50')

ii. well pad dimensions

iii. well pad orientation

iv. drilling rig components

v.proposed access road

vi. elevations of all points

vii. topsoil stockpile

viii. reserve pit location/dimensions if applicable

ix. other disturbances needed (flare pit, stinger, frac farm pad, etc.)

x.existing structures within the 600' x 600' archaeoligical surveyed area (pipelines, electric lines, well pads, etc

b. The proposed drilling pad was staked and surveyed by a professional surveyor. The attached survey plat of the well site depicts the drilling pad layout as staked.

c. A title of a well site diagram is NEVER BETTER 14 FED COM 723H RIG LAYOUT. This diagram depicts the RIG LAYOUT.

d. Topsoil Salvaging

i. Grass, forbs, and small woody vegetation, such as mesquite will be excavated as the topsoil is removed. Large woody vegetation will be stripped and stored separately and respread evenly on the site following topsoil respreading. Topsoil depth is defined as the top layer of soil that contains 80% of the roots. In areas to be heavily disturbed, the top 6 inches of soil material, will be stripped and stockpiled on the perimeter of the well location and along the perimeter of the access road to control run-on and run-off, to keep topsoil viable, and to make redistribution of topsoil more efficient during interim reclamation. Stockpiled topsoil should include vegetative material. Topsoil will be clearly segregated and stored separately from subsoils. Contaminated soil will not be stockpiled, but properly treated and handled prior to topsoil salvaging.

10. Plans for Surface Reclamation

Reclamation Objectives

i. The objective of interim reclamation is to restore vegetative cover and a portion of the landform sufficient to maintain healthy, biologically active topsoil; control erosion; and minimize habitat and forage loss, visual impact, and weed infestation, during the life of the well or facilities.

ii. The long-term objective of final reclamation is to return the land to a condition similar to what existed prior to disturbance. This includes restoration of the landform and natural vegetative community, hydrologic systems, visual resources, and wildlife habitats. To ensure that the long-term objective will be reached through human and natural processes, actions will be taken to ensure standards are met for site stability, visual quality, hydrological functioning, and vegetative productivity.

iii. The BLM will be notified at least 3 days prior to commencement of any reclamation procedures.

iv. If circumstances allow, interim reclamation and/or final reclamation actions will be completed no later than 6 months from when the final well on the location has been completed or plugged. We will gain written permission from the BLM if more time is needed.

v. Interim reclamation will be performed on the well site after the well is drilled and completed. NEVER BETTER 14 FED COM 723H RECLAMATION depicts the location and dimensions of the planned interim reclamation for the well site.

Interim Reclamation Procedures (If performed)

1. Within 30 days of well completion, the well location and surrounding areas will be cleared of, and maintained free of, all materials, trash, and equipment not required for production.

2. In areas planned for interim reclamation, all the surfacing material will be removed and returned to the original mineral pit or recycled to repair or build roads and well pads.

3. The areas planned for interim reclamation will then be recontoured to the original contour if feasible, or if not feasible, to an interim contour that blends with the surrounding topography as much as possible. Where applicable, the fill material of the well pad will be backfilled into the cut to bring the area back to the original contour. The interim cut and fill slopes prior to re-seeding will not be steeper than a 3:1 ratio, unless the adjacent native topography is steeper. Note: Constructed slopes may be much steeper during drilling, but will be recontoured to the above ratios during interim reclamation.

4. Topsoil will be evenly respread and aggressively revegetated over the entire disturbed area not needed for all-weather operations including cuts & fills. To seed the area, the proper BLM seed mixture, free of noxious weeds, will be used. Final seedbed preparation will consist of contour cultivating to a depth of 4 to 6 inches within 24 hours prior to seeding, dozer tracking, or other imprinting in order to break the soil crust and create seed germination micro-sites.

5. Proper erosion control methods will be used on the area to control erosion, runoff and siltation of the surrounding area.

6. The interim reclamation will be monitored periodically to ensure that vegetation has reestablished and that erosion is controlled.

Final Reclamation (well pad, buried pipelines, etc.)

1. Prior to final reclamation procedures, the well pad, road, and surrounding area will be cleared of material, trash, and equipment.

2. All surfacing material will be removed and returned to the original mineral pit or recycled to repair or build roads and well pads.

3. All disturbed areas, including roads, pipelines, pads, production facilities, and interim reclaimed areas will be recontoured to the contour existing prior to initial construction or a contour that blends indistinguishably with the surrounding landscape. Topsoil that was spread over the interim reclamation areas will be stockpiled prior to recontouring. The topsoil will be redistributed evenly over the entire disturbed site to ensure successful revegetation.

4. After all the disturbed areas have been properly prepared, the areas will be seeded with the proper BLM seed mixture, free of noxious weeds. Final seedbed preparation will consist of contour cultivating to a depth of 4 to 6 inches within 24 hours prior to seeding, dozer tracking, or other imprinting in order to break the soil crust and create seed germination micro-sites.

5. Proper erosion control methods will be used on the entire area to control erosion, runoff and siltation of the surrounding area.

6. All unused equipment and structures including pipelines, electric line poles, tanks, etc. that serviced

the well will be removed.

7. All reclaimed areas will be monitored periodically to ensure that revegetation occurs, that the area is not redisturbed, and that erosion is controlled.

11. Surface Ownership

a. The surface ownership of the proposed project is FEDERAL.

12. Other Information

a. Onsite meeting was conducted on 1/2/2024.
We plan to use (6) 12-inch lay flat hoses to transport water and (6) 4-inch polylines or layflay for drilling and frac operations.
The well will be produced using gas lift as the artificial lift method.
Produced water will be transported via pipeline to the EOG produced water gathering system.

13. Maps and Diagrams

NEVER BETTER 14 FED COM 723H VICINITY - Existing Road
NEVER BETTER 14 FED COM 723H MILE RADIUS - Wells Within One Mile
NEVER BETTER 14 FED COM CTB - Production Facilities Diagram
NEVER BETTER 14 FED COM INFRASTRUCTURE MAP/SKETCH - Additional Production Facilities Diagram
NEVER BETTER 14 FED COM INFRASTRUCTURE MAP/SKETCH - Production Pipeline
NEVER BETTER 14 FED COM INFRASTRUCTURE MAP/SKETCH - Electric Line
NEVER BETTER 14 FED COM WATER AND CALICHE MAP - Drilling Water Pipeline
NEVER BETTER 14 FED COM 723H RIG LAYOUT - Well Site Diagram
NEVER BETTER 14 FED COM 723H RECLAMATION - Interim Reclamation

EOG Resources, Inc.

Surface Use Plan of Operations Section 7 Methods for Handling Waste Attachment

Human waste managed by third-party vendors. ROW construction waste contained in on-site portable toilets maintained by third party vendor. During drilling activities waste is managed by third party vendor utilizing onsite aerobic (treatment) wastewater management. Liquids treated through the aerobic system are transferred to via water line to CTBs for reuse by EOG. All solid waste remaining after treatment process are pumped into an enclosed waste transfer truck at the time of rig down and taken to one of the following disposal facilities by the third-party vendor: Qual Run Services LLC (a Licensed Waste Management Service Facility in Reeves County, Texas) or ReUse OilField Services (a Licensed Waste Management Facility in Mentone, TX)

Trash dumpsters are utilized to contain garbage onsite. Dumpsters are maintained by a third-party vendor. All trash is hauled to Lee County, NM landfill.

EOG utilizes a Closed Loop System, cuttings leave the rig and enter low/highwall cuttings bin. Cuttings are then transferred to trucks for transportation to a State of New Mexico approved disposal facility. Primary disposal location for EOG's NM operations is the North Delaware Basin Disposal Facility in Jal, New Mexico which is a privately owned commercial facility. Some EOG locations within New Mexico may require transportation of cuttings to other licensed commercial disposal facilities based on geographic location.

Drilling fluids and produced oil and water from the well during drilling and completion operations will be stored onsite in frac tanks and disposed of at the time of rig down. Primary disposal location for EOG's NM operations is the North Delaware Basin Disposal facility in Jal, New Mexico which is a privately owned commercial facility. Some EOG locations within New Mexico may require transportation of cuttings to other licensed commercial disposal facilities based on geographic location.

OVERHEAD ELECTRIC LINE ATTACHMENT

Electric Line(s)

a. We plan to install an overhead electric line for the proposed well. The proposed length of the electric line will be 94 feet. Overhead Electric Line depicts the location of the proposed electric line route. The electric line will be constructed to provide protection from raptor electrocution.

b. The proposed electric line does not cross lease boundaries, so a right of way grant will not need to be acquired from the BLM.

AFMSS

U.S. Department of the Interior
BUREAU OF LAND MANAGEMENT

PWD Data Report

09/09/2026

APD ID: 10400098402 **Submission Date:** 05/08/2024

Operator Name: EOG RESOURCES INCORPORATED

Well Name: NEVER BETTER 14 FED COM **Well Number:** 723H

Well Type: OIL WELL **Well Work Type:** Drill

Section 1 - General

Would you like to address long-term produced water disposal? NO

Section 2 - Lined

Would you like to utilize Lined Pit PWD options? N

Produced Water Disposal (PWD) Location:

PWD surface owner: **PWD disturbance (acres):**

Other PWD Surface Owner Description:

Lined pit PWD on or off channel:

Lined pit PWD discharge volume (bbl/day):

Lined pit

Pit liner description:

Pit liner manufacturers

Precipitated solids disposal:

Decribe precipitated solids disposal:

Precipitated solids disposal

Lined pit precipitated solids disposal schedule:

Lined pit precipitated solids disposal schedule

Lined pit reclamation description:

Lined pit reclamation

Leak detection system description:

Leak detection system

Operator Name: EOG RESOURCES INCORPORATED

Well Name: NEVER BETTER 14 FED COM **Well Number:** 723H

Lined pit Monitor description:

Lined pit Monitor

Lined pit: do you have a reclamation bond for the pit?

Is the reclamation bond a rider under the BLM bond?

Lined pit bond number:

Lined pit bond amount:

Additional bond information

Section 3 - Unlined

Would you like to utilize Unlined Pit PWD options? N

Produced Water Disposal (PWD) Location:

PWD disturbance (acres): **PWD surface owner:**

Other PWD Surface Owner Description:

Unlined pit PWD on or off channel:

Unlined pit PWD discharge volume (bbl/day):

Unlined pit

Precipitated solids disposal:

Decribe precipitated solids disposal:

Precipitated solids disposal

Unlined pit precipitated solids disposal schedule:

Unlined pit precipitated solids disposal schedule

Unlined pit reclamation description:

Unlined pit reclamation

Unlined pit Monitor description:

Unlined pit Monitor

Do you propose to put the produced water to beneficial use?

Beneficial use user

Estimated depth of the shallowest aquifer (feet):

Precipitated Solids Permit

Does the produced water have an annual average Total Dissolved Solids (TDS) concentration equal to or less than that of the existing water to be protected?

TDS lab results:

Geologic and hydrologic

Operator Name: EOG RESOURCES INCORPORATED

Well Name: NEVER BETTER 14 FED COM **Well Number:** 723H

State

Unlined Produced Water Pit Estimated

Unlined pit: do you have a reclamation bond for the pit?

Is the reclamation bond a rider under the BLM bond?

Unlined pit bond number:

Unlined pit bond amount:

Additional bond information

Section 4 -

Would you like to utilize Injection PWD options? N

Produced Water Disposal (PWD) Location:

PWD surface owner: **PWD disturbance (acres):**

Other PWD Surface Owner Description:

Injection PWD discharge volume (bbl/day):

Injection well mineral owner:

Injection well type:

Injection well number: **Injection well name:**

Assigned injection well API number? **Injection well API number:**

Injection well new surface disturbance (acres):

Minerals protection information:

Mineral protection

Underground Injection Control (UIC) Permit?

UIC Permit

Section 5 - Surface

Would you like to utilize Surface Discharge PWD options? N

Produced Water Disposal (PWD) Location:

PWD surface owner: **PWD disturbance (acres):**

Other PWD Surface Owner Description :

Surface discharge PWD discharge volume (bbl/day):

Surface Discharge NPDES Permit?

Surface Discharge NPDES Permit attachment:

Surface Discharge site facilities information:

Surface discharge site facilities map:

Operator Name: EOG RESOURCES INCORPORATED

Well Name: NEVER BETTER 14 FED COM **Well Number:** 723H

Section 6 -

Would you like to utilize Other PWD options? N

Produced Water Disposal (PWD) Location:

PWD surface owner: **PWD disturbance (acres):**

PWD Surface Owner Description:

Other PWD discharge volume (bbl/day):

Other PWD type description:

Other PWD type

Have other regulatory requirements been met?

Other regulatory requirements

AFMSS

U.S. Department of the Interior
BUREAU OF LAND MANAGEMENT

Bond Info Data

09/09/2026

APD ID: 10400098402

Submission Date: 05/08/2024

Operator Name: EOG RESOURCES INCORPORATED

Well Name: NEVER BETTER 14 FED COM

Well Number: 723H

Well Type: OIL WELL

Well Work Type: Drill

Highlighted data reflects the most recent changes

Show Final Text

Bond

Federal/Indian APD: FED

BLM Bond number: NM2308

BIA Bond number:

Do you have a reclamation bond? NO

Is the reclamation bond a rider under the BLM bond?

Is the reclamation bond BLM or Forest Service?

BLM reclamation bond number:

Forest Service reclamation bond number:

Forest Service reclamation bond attachment:

Reclamation bond amount:

Reclamation bond rider amount:

Additional reclamation bond information attachment:

Sante Fe Main Office
Phone: (505) 476-3441

General Information
Phone: (505) 629-6116

Online Phone Directory
https://www.emnrd.nm.gov/ocd/contact-us

State of New Mexico
Energy, Minerals and Natural Resources
Oil Conservation Division
1220 S. St Francis Dr.
Santa Fe, NM 87505

ACKNOWLEDGMENTS

Operator: EOG RESOURCES INC 5509 Champions Drive Midland, TX 79706	OGRID: 7377
	Action Number: 637119
	Action Type: [C-101] BLM - Federal/Indian Land Lease (Form 3160-3)

ACKNOWLEDGMENTS

☑	I hereby certify that no additives containing PFAS chemicals will be added to the completion or recompletion of this well.

Sante Fe Main Office
Phone: (505) 476-3441

General Information
Phone: (505) 629-6116

Online Phone Directory
https://www.emnrd.nm.gov/ocd/contact-us

State of New Mexico
Energy, Minerals and Natural Resources
Oil Conservation Division
1220 S. St Francis Dr.
Santa Fe, NM 87505

CONDITIONS

Operator:	OGRID:
EOG RESOURCES INC 5509 Champions Drive Midland, TX 79706	7377
	Action Number: 637119
	Action Type: [C-101] BLM - Federal/Indian Land Lease (Form 3160-3)

CONDITIONS

Created By	Condition	Condition Date
kayla_mcconnell	Cement is required to circulate on both surface and intermediate1 strings of casing.	10/28/2026
jeffrey.harrison	If the method of isolation was not by circulation, a CBL must be performed; if strata isolation is not achieved, then remediation will be required before further operations.	11/13/2026
jeffrey.harrison	Directional survey reports the first take point is anticipated to occur within the Bone Spring formation. If production is desired to occur outside of the Wolfcamp formation, a second pool must be added via a [C-103] NOI Change of Plans (C-103A) and a DHC must be approved prior to producing the well.	11/13/2026
jeffrey.harrison	File As Drilled C-102 and a directional Survey with C-104 completion packet.	11/13/2026
jeffrey.harrison	Notify the OCD 24 hours prior to casing & cement.	11/13/2026
jeffrey.harrison	Once the well is spud, to prevent ground water contamination through whole or partial conduits from the surface, the operator shall drill without interruption through the fresh water zone or zones and shall immediately set in cement the water protection string.	11/13/2026
jeffrey.harrison	Oil base muds are not to be used until fresh water zones are cased and cemented providing isolation from the oil or diesel. This includes synthetic oils. Oil based mud, drilling fluids and solids must be contained in a steel closed loop system.	11/13/2026