AFMSS

U.S. Department of the Interior
Bureau of Land Management

Application for Permit to Drill

APD Package Report

Date Printed:

APD ID:	Well Status:
APD Received Date:	Well Name:
Operator:	Well Number:

APD Package Report Contents

- Form 3160-3

- Operator Certification Report

- Application Report
- Application Attachments
  -- Well Plat: 1 file(s)

- Drilling Plan Report
- Drilling Plan Attachments
  -- Blowout Prevention Choke Diagram Attachment: 2 file(s)
  -- Blowout Prevention BOP Diagram Attachment: 3 file(s)
  -- Casing Design Assumptions and Worksheet(s): 4 file(s)
  -- Hydrogen sulfide drilling operations plan: 1 file(s)
  -- Proposed horizontal/directional/multi-lateral plan submission: 2 file(s)
  -- Other Facets: 2 file(s)
  -- Other Variances: 2 file(s)

- SUPO Report
- SUPO Attachments
  -- Existing Road Map: 1 file(s)
  -- New Road Map: 1 file(s)
  -- Attach Well map: 1 file(s)
  -- Production Facilities map: 1 file(s)
  -- Water source and transportation map: 1 file(s)
  -- Construction Materials source location attachment: 1 file(s)
  -- Well Site Layout Diagram: 1 file(s)
  -- Recontouring attachment: 1 file(s)

- PWD Report
- PWD Attachments
  -- None

CONFIDENTIAL

- Bond Report
- Bond Attachments
  -- None

Form 3160-3
(October 2024)

FORM APPROVED
OMB No. 1004-0137
Expires: October 31, 2027

UNITED STATES
DEPARTMENT OF THE INTERIOR
BUREAU OF LAND MANAGEMENT

APPLICATION FOR PERMIT TO DRILL OR REENTER

5. Lease Serial No.

6. If Indian, Allotee or Tribe Name

1a. Type of work: ☐ DRILL ☐ REENTER

1b. Type of Well: ☐ Oil Well ☐ Gas Well ☐ Other

1c. Type of Completion: ☐ Hydraulic Fracturing ☐ Single Zone ☐ Multiple Zone

7. If Unit or CA Agreement, Name and No.

8. Lease Name and Well No.

2. Name of Operator

9. API Well No.
30-025-57117

3a. Address

3b. Phone No. *(include area code)*

10. Field and Pool, or Exploratory
WC-025 G-08 S193409O;UPPER PENN

4. Location of Well *(Report location clearly and in accordance with any State requirements.*)*

At surface

At proposed prod. zone

11. Sec., T. R. M. or Blk. and Survey or Area

14. Distance in miles and direction from nearest town or post office*

12. County or Parish

13. State

15. Distance from proposed* location to nearest property or lease line, ft. (Also to nearest drig. unit line, if any)	16. No of acres in lease	17. Spacing Unit dedicated to this well
18. Distance from proposed location* to nearest well, drilling, completed, applied for, on this lease, ft.	19. Proposed Depth	20. BLM/BIA Bond No. in file
21. Elevations (Show whether DF, KDB, RT, GL, etc.)	22. Approximate date work will start*	23. Estimated duration

24. Attachments

The following, completed in accordance with the requirements of Onshore Oil and Gas Order No. 1, and the Hydraulic Fracturing rule per 43 CFR 3162.3-3 (as applicable)

1. Well plat certified by a registered surveyor.
2. A Drilling Plan.
3. A Surface Use Plan (if the location is on National Forest System Lands, the SUPO must be filed with the appropriate Forest Service Office).
4. Bond to cover the operations unless covered by an existing bond on file (see Item 20 above).
5. Operator certification.
6. Such other site specific information and/or plans as may be requested by the BLM.

25. Signature	Name *(Printed/Typed)*	Date
Title		
Approved by *(Signature)*	Name *(Printed/Typed)*	Date
Title	Office	

Application approval does not warrant or certify that the applicant holds legal or equitable title to those rights in the subject lease which would entitle the applicant to conduct operations thereon.
Conditions of approval, if any, are attached.

Title 18 U.S.C. Section 1001 and Title 43 U.S.C. Section 1212, make it a crime for any person knowingly and willfully to make to any department or agency of the United States any false, fictitious or fraudulent statements or representations as to any matter within its jurisdiction.

APPROVED WITH CONDITIONS

(Continued on page 2)

*(Instructions on page 2)

Approval Date: 11/06/2026

Confidential

INSTRUCTIONS

GENERAL: This form is designed for submitting proposals to perform certain well operations, as indicated on Federal and Indian lands and leases for action by appropriate Federal agencies, pursuant to applicable Federal laws and regulations. Any necessary special instructions concerning the use of this form and the number of copies to be submitted, particularly with regard to local, area, or regional procedures and practices, either are shown below or will be issued by, or may be obtained from local Federal offices.

ITEM I: If the proposal is to redrill to the same reservoir at a different subsurface location or to a new reservoir, use this form with appropriate notations. Consult applicable Federal regulations concerning subsequent work proposals or reports on the well.

ITEM 4: Locations on Federal or Indian land should be described in accordance with Federal requirements. Consult local Federal offices for specific instructions.

ITEM 14: Needed only when location of well cannot readily be found by road from the land or lease description. A plat, or plats, separate or on the reverse side, showing the roads to, and the surveyed location of, the wen, and any other required information, should be furnished when required by Federal agency offices.

ITEMS 15 AND 18: If well is to be, or has been directionany drilled, give distances for subsurface location of hole in any present or objective productive zone.

ITEM 22: Consult applicable Federal regulations, or appropriate officials, concerning approval of the proposal before operations are started.

ITEM 24: If the proposal will involve hydraulic fracturing operations, you must comply with 43 CFR 3162.3-3, including providing information about the protection of usable water. Operators should provide the best available information about all formations containing water and their depths. This information could include data and interpretation of resistivity logs run on nearby wells. Information may also be obtained from state or tribal regulatory agencies and from local BLM offices.

NOTICES

The Privacy Act of 1974 and regulation in 43 CFR 2.48(d) provide that you be furnished the following information in connection with information required by this application.

AUTHORITY: 30 U.S.C. 181 et seq., 25 U.S.C. 396; 43 CFR 3160

PRINCIPAL PURPOSES: The information will be used to: (1) process and evaluate your application for a permit to drill a new oil, gas, or service wen or to reenter a plugged and abandoned well; and (2) document, for administrative use, information for the management, disposal and use of National Resource Lands and resources including (a) analyzing your proposal to discover and extract the Federal or Indian resources encountered; (b) reviewing procedures and equipment and the projected impact on the land involved; and (c) evaluating the effects of the proposed operation on the surface and subsurface water and other environmental impacts.

ROUTINE USE: Information from the record and/or the record win be transferred to appropriate Federal, State, and local or foreign agencies, when relevant to civil, criminal or regulatory investigations or prosecution, in connection with congressional inquiries and for regulatory responsibilities.

EFFECT OF NOT PROVIDING INFORMATION: Filing of this application and disclosure of the information is mandatory only if you elect to initiate a drilling or reentry operation on an oil and gas lease.

The Paperwork Reduction Act of 1995 requires us to inform you that:
The BLM conects this information to anow evaluation of the technical, safety, and environmental factors involved with drilling for oil and/or gas on Federal and Indian oil and gas leases. This information will be used to analyze and approve applications. Response to this request is mandatory only if the operator elects to initiate drilling or reentry operations on an oil and gas lease. The BLM would like you to know that you do not have to respond to this or any other Federal agency-sponsored information collection unless it displays a currently valid OMB control number.

BURDEN HOURS STATEMENT: Public reporting burden for this form is estimated to average 8 hours per response, including the time for reviewing instructions, gathering and maintaining data, and completing and reviewing the form. Direct comments regarding the burden estimate or any other aspect of this form to U.S. Department of the Interior, Bureau of Land Management (1004-0137), Bureau Information Conection Clearance Officer (WO-630), 1849 C Street, N.W., Mail Stop 401 LS, Washington, D.C. 20240.

Released to Imaging: 11/20/2026 2:01:41 PM

Approval Date: 11/06/2026

Confidential

Additional Operator Remarks

Location of Well

0. SHL: SWSE / 260 FSL / 1915 FEL / TWSP: 19S / RANGE: 34E / SECTION: 9 / LAT: 32.6682285 / LONG: -103.5629251 (TVD: 0 feet, MD: 0 feet)

PPP: NESE / 1320 FNL / 445 FEL / TWSP: 19S / RANGE: 34E / SECTION: 4 / LAT: 32.6856588 / LONG: -103.5581633 (TVD: 11897 feet, MD: 18970 feet)

PPP: SENE / 2639 FSL / 447 FEL / TWSP: 19S / RANGE: 34E / SECTION: 9 / LAT: 32.6747793 / LONG: -103.5581643 (TVD: 11938 feet, MD: 15012 feet)

PPP: SESE / 100 FSL / 450 FEL / TWSP: 19S / RANGE: 34E / SECTION: 9 / LAT: 32.6678032 / LONG: -103.5581649 (TVD: 11965 feet, MD: 12474 feet)

BHL: NENE / 100 FNL / 450 FEL / TWSP: 19S / RANGE: 34E / SECTION: 4 / LAT: 32.696665 / LONG: -103.5581622 (TVD: 11855 feet, MD: 22975 feet)

BLM Point of Contact

Name: PAMELLA HERNANDEZ
Title: LIE
Phone: (575) 234-5954
Email: PHERNANDEZ@BLM.GOV

CONFIDENTIAL

UNITED STATES DEPARTMENT OF THE INTERIOR

BUREAU OF LAND MANAGEMENT – CARLSBAD FIELD OFFICE

Applicant: Mewbourne Oil Company

Project Title: Cow Bell 9-4 Fed Com Multi-well

EA #: DOI-BLM-NM-P020-2026-1737-EA

Location: Lea County, New Mexico

Lease Number: NMNM142575, NMNM010474, NMNM0004591, NMNM009414

Project Type: Application for Permit to Drill (APD)

Surface Use Conditions of Approval (COAs)

Failure of the operator to comply with these requirements may result in the assessment of penalties pursuant to 43 CFR 3163.1 or 3163.2. ***A copy of these conditions of approval shall be present on the location during construction, drilling and reclamation activity.*** *Any request for a variance shall be submitted to the Authorized Officer on Form 3160-5.*

Wells:

COW BELL 9-4 FED COM 315H

SHL: 260 feet FSL and 1955 feet FEL, Section 9, T. 19 S., R. 34 E.

BHL: 100 feet FNL and 2310 feet FEL, Section 4, T. 19 S., R. 34 E.

COW BELL 9-4 FED COM 407H

SHL: 260 feet FSL and 1935 feet FEL, Section 9, T. 19 S., R. 34 E.

BHL: 100 feet FNL and 990 feet FEL, Section 4, T. 19 S., R. 34 E.

COW BELL 9-4 FED COM 905H

SHL: 260 feet FSL and 1975 feet FEL, Section 9, T. 19 S., R. 34 E.

BHL: 100 feet FNL and 2310 feet FEL, Section 4, T. 19 S., R. 34 E.

COW BELL 9-4 FED COM 907H

SHL: 260 feet FSL and 1915 feet FEL, Section 9, T. 19 S., R. 34 E.

BHL: 100 feet FNL and 450 feet FEL, Section 4, T. 19 S., R. 34 E.

Application Facilities

1. Construction Notification

The BLM shall administer compliance and monitor construction of the access road and well pad. Notify the Carlsbad Field Office at BLM_NM_CFO_Construction_Reclamation@blm.gov at least 3 working days prior to commencing construction of the access road and/or well pad.

When construction operations are being conducted on this well, the operator shall have the approved APD and COAs on the well site and they shall be made available upon request by the Authorized Officer.

2. Access Road(s)

Road Width & Grade

The road will have a driving surface of 14 feet (all roads shall have a minimum driving surface of 12 feet, unless local conditions dictate a different width). The maximum grade is 10% unless the box below is checked. The maximum width of surface disturbance from construction will be 25 feet.

☐ The segments of road where the grade is more than 10% for greater than 300 feet shall be designed by a professional engineer.

Crowning & Ditching

Crowning with materials onsite and ditching on one side of the road on the uphill side will be required. The road cross-section will conform to the cross-section diagrams in turnout diagram. If conditions dictate, ditching may be required for both sides of the road; if local conditions permit, a flat-bladed road may be considered (if these conditions exist, check the appropriate box below). The crown shall have a grade of approximately 2% (i.e., 1" crown on a 12' wide road.)

☐ Ditching will be required on both sides of the roadway as shown on the attached plat or as staked in the field.

☐ Flat blading is authorized on segment(s) delineated on the attached plat.

Drainage

Drainage control shall be ensured over the entire road using borrow ditches, out-sloping, in-sloping, natural rolling topography, lead-off (turnout) ditches, culverts, and/or drainage dips.

Culvert pipes shall be used for cross drains where drainage dips or low water crossings are not feasible. The minimum culvert diameter must be 18 inches. **Due to flash floods, increased overland flow, and related debris, the BLM strongly recommends the operator increases the culvert diameter to 24 inches or larger.** Flared culvert, rock armoring, and gravel are recommended for culvert stability. Culvert location and required diameter are shown on the attached map. If culverts or drainage crossings are needed, they should be designed for a **25-year or greater storm frequency**, without development of a static head at the pipe inlet. ***Any culvert pipe installed shall be of sufficient diameter to pass the anticipated flow of water.***

All lead-off and turnout ditches shall be graded to drain water with a 1 percent minimum to 3 percent maximum ditch slope. The spacing interval for lead-off ditches shall be determined according to the following table, but may be amended depending upon existing soil types and centerline road slope:

Percent Slope	Spacing Interval
0% – 4%	400' – 150'
4% – 6%	250' – 125'
6% – 8%	200' – 100'
8% – 10%	150' – 075'

Turnout ditches and drainage leadoffs will not be constructed in such a manner as to increase or decrease the natural flow of water into or out of cave or karst features.

LEAD-OFF

A typical lead-off ditch has a minimum depth of 1 foot below and a berm 1 foot above natural ground level. The berm will be on the down-slope side of the lead-off ditch. The ditch end will tie into vegetation whenever possible.

For this road the spacing interval for lead-off ditches shall be at:

☑ 400-foot intervals.

☐ 2500-foot intervals.

☐ Locations staked in the field as per spacing intervals above.

☐ Locations delineated on the attached plat.

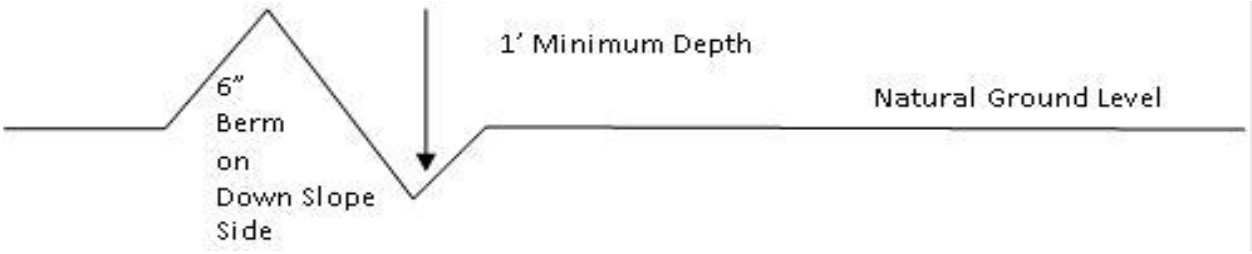

On road slopes exceeding 2%, drainage dips shall drain water into an adjacent lead off ditch. Drainage dip location and spacing shall be determined by the formula:

$$Spacing\ Interval = Road\ Slope\ in\ \% + 100'$$

Example: On a 4% road slope that is 400 feet long, the water flow shall drain water into a lead-off ditch. Spacing interval shall be determined by the following formula:

$$400\ ft\ road\ with\ 4\%\ slope = \frac{400'}{4\%} + 100' = 200'\ leadoff\ ditch\ interval$$

TURNOUTS

Unless otherwise approved by the Authorized Officer, vehicle turnouts will be required. Turnouts will be located at 1000-foot intervals, or the turnouts will be intervisible, whichever is less. **Turnouts will conform to the following diagram:**

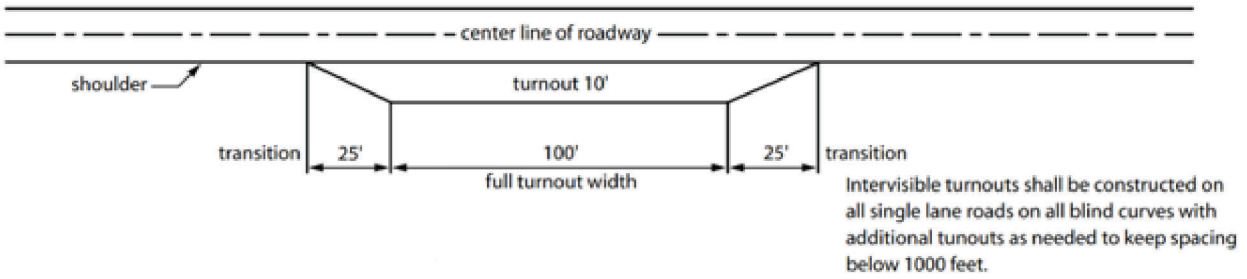

Additional options can be found within the fourth edition of the **Surface Operating Standards and Guidelines for Oil and Gas Exploration and Development (The Gold Book)**.

SURFACING

Surfacing material is not required on the new access road driving surface. If the operator elects to surface the new access road or pad, the surfacing material may be required to be removed at the time of reclamation. Where possible, no improvements should be made on the unsurfaced access road other than to remove vegetation as necessary, road irregularities, safety issues, or to fill low areas that may sustain standing water.

The Authorized Officer reserves the right to require surfacing of any portion of the access road at any time deemed necessary. Surfacing may be required in the event the road deteriorates, erodes, road traffic increases, or it is determined to be beneficial for future field development. The surfacing depth and type of material will be determined at the time of notification. When surfacing is required, surfacing materials will be compacted to a minimum thickness of **6 inches** with caliche material. The width of surfacing shall be no less than the driving surface.

EROSION CONTROL & ROAD MAINTENANCE

The holder shall maintain the road in a safe, usable condition. A maintenance program shall include, but not be limited to blading, ditching, culvert installation, culvert cleaning, drainage installation, cattleguard maintenance, and surfacing.

If, during any phase of the construction, operation, maintenance, or termination of the road, any oil or other pollutant should be discharged, impacting Federal lands, the control and total removal, disposal, and cleaning up of such oil of other pollutant, wherever found, shall be the responsibility of the holder, regardless of fault.

Upon failure of the holder to control, dispose of, or clean up such discharge on or affecting Federal lands, or to repair all damages to Federal lands resulting therefrom, the Authorized Officer may take such measures as deemed necessary to control and cleanup the discharge and restore the area, including, where appropriate, the aquatic environment and fish and wildlife habitats, at the full expense of the holder. Such action by the Authorized Officer shall not relieve the holder of any liability or responsibility.

PUBLIC ACCESS

The holder will not restrict public access along this road without specific written approval being granted by the Authorized Officer. Gates or cattle guards on public lands will not be locked or closed to public use unless closure is specifically determined to be necessary and is authorized in writing by the Authorized Officer.

RECLAMATION

When the road is abandoned, it will be ripped at least sixteen inches deep, including turnouts. The caliche may be reclaimed for re-use before ripping, if so desired. Alternately, the caliche can be plowed under with a grader, or other soil turning device, and the plowed surface disked before seeding. All culverts or other structures will be removed. All fill material will be replaced into the cut areas; barrow and lead-off ditches, drainage dips, or other erosion control earthwork will be filled or smoothed; and the abandoned road returned to the natural contours, as closely as possible. Water breaks at least eight inches high will be constructed. Traffic barriers will be installed at all vehicular access points to prevent further use of the road.

The Authorized Officer for the BLM, Carlsbad Field Office (505-234-5972) will be contacted for full reclamation of the access road upon abandonment of the wells being served by the access road.

3. ELECTRIC & FIBER CABLE(S)

All power poles used shall be a drab blond color and a non-reflective / non-specular wire shall be used.

Power lines shall be constructed and designed in accordance with standards outlined in "Suggested Practices for Avian Protection on Power lines: The State of the Art in 2006" Edison Electric Institute, APLIC, and the California Energy Commission 2006. The holder assumes the burden and expense of proving that pole designs not shown in the above publication deter raptor perching, roosting, and nesting. Raptor deterrence will consist of but not limited to the following: triangle perch discouragers shall be placed on each side of the cross arms, and a nonconductive perching deterrence shall be placed on all vertical poles that extend past the cross arms. Such proof shall be provided by a raptor expert approved by the Authorized Officer. The BLM reserves the right to require modification or additions to all powerline structures placed on this corridor, should they be necessary to ensure the safety of large perching birds. Such modifications and/or additions shall be made by the holder without liability or expense to the United States.

Raptor deterrence will consist of but not limited to the following: triangle perch discouragers shall be placed on each side of the cross arms, and a nonconductive perching deterrence shall be placed on all vertical poles that extend past the cross arms.

There will be no clearing or blading of the corridor unless otherwise agreed to in writing by the Authorized Officer.

The holder shall not use the corridor as a road for purposes other than routine maintenance as determined necessary by the Authorized Officer in consultation with the holder. The holder shall take whatever steps are necessary to ensure that the route is not used as a roadway.

For reclamation remove poles, lines, transformer, etc. and dispose of properly. Fill in any holes from the poles removed. All surface structures (poles, lines, transformers, etc.) shall be removed within 180 days of abandonment, relinquishment, or termination of use of the serviced facility or facilities or within 180 days of abandonment, relinquishment, cancellation, or expiration of this grant, whichever comes first. This will not apply where the power line extends service to an active, adjoining facility or facilities.

4. PIPELINE(S)

The holder shall not use the pipeline route as a road for purposes other than routine maintenance as determined necessary by the Authorized Officer in consultation with the holder before

maintenance begins. The holder shall take whatever steps are necessary to ensure that the pipeline route is not used as a roadway. As determined necessary during the life of the pipeline, the Authorized Officer may ask the holder to construct temporary deterrence structures.

All construction and maintenance activity shall be confined to the authorized permit length of **626.93 feet**. Regular monitoring is required to quickly identify leaks for their immediate and proper treatment. All spills or leaks will be reported to the BLM immediately for their immediate and proper treatment.

The pipeline will be identified by signs at the point of origin and completion of the pipeline corridor and at all road crossings. At a minimum, signs will state the operator's name, BLM serial number, and the product being transported. Signs will be maintained in a legible condition for the life of the pipeline.

A sign stating "This Pipeline Corridor is Closed to Vehicular Traffic Due to Reclamation Efforts in Progress" will be placed where the pipeline crosses any road (both sides of the road), and at the beginning and end of the pipeline route on BLM administered lands. ***Upon successful completion of reclamation, no further motorized travel will occur on the pipeline route.***

Buried Pipeline

The pipeline will be buried with a minimum cover of **36 inches** between the top of the pipe and ground level (including under roads). ***The pipeline must be buried at least 48-inches deep in irrigated fields.*** Boring is required where the line crosses all cement irrigation ditches. No damage should occur to the ditches. Consequently, if damage should occur, the holder is liable for any necessary repairs. The BLM Carlsbad Field Office will determine design standards for any necessary repair.

Blading of all vegetation will not be allowed. The maximum width of blading operations will not exceed **30-feet**. The trench is included in this area. Blading is defined as the complete removal of brush and ground vegetation. The operator shall stockpile an adequate amount of topsoil where blading is allowed. The topsoil will be stripped to approximately **6-inches** in depth. The topsoil will be segregated from other spoil piles from trench construction. The topsoil will be evenly distributed over the bladed area for the preparation of seeding.

Clearing of brush will not be allowed. Clearing is defined as the removal of brush while leaving ground vegetation (grasses, weeds, etc.) intact. The maximum width of clearing operations will not exceed **30-feet**. Clearing is best accomplished by holding the blade 4 to 6 inches above the ground surface or by using brush-hog / hydro-ax equipment to "mulch" woody vegetation.

The remaining area of the pipeline route (if any) shall only be disturbed by compressing the vegetation. (Compressing can be caused by vehicle tires, placement of equipment, placement of dirt/spoil, etc.)

Areas of cut and/or fill totaling more than 6-vertical-feet requires specific site-by-site approval by the BLM Authorized Officer.

Welding Stipulations

The following precautions will be taken for all arc and/or gas welding operations, and operations where oxyacetylene cutting and brazing are done in a wildland fire environment.

1. At the work site, clear away all flammable vegetation down to mineral soil for a minimum radius of 6 feet around where the welding/cutting will take place. This includes grasses and other vegetative material.
2. While conducting the welding/cutting operations, the operator will have within 25 feet of the welding/cutting site: Five (5) gallons of water and / or a five (5) pound multi-purpose dry fire extinguisher and a round point shovel.
3. After welding/cutting activities are completed, a routine return to the site will be required within 1 hour after the completion of the activity to check for any potential hot material that may start a wildland fire.

Operators and contractors are reminded that they may be held responsible for any wildland fire that starts from welding/cutting operations. This includes the cost for suppressing any wildland fire that starts from these activities.

5. WELL PAD(S)

The operator will prevent all hazardous, poisonous, flammable, and toxic substances from encountering soil and water. The operator will dispose of fluids within the containment system that do not meet applicable state or U. S. Environmental Protection Agency livestock water standards in accordance with state law; the operator must not drain the fluids to the soil or ground. The operator will design, construct, and maintain all secondary containment systems to prevent wildlife and livestock exposure to harmful substances. At a minimum, the operator will install effective wildlife and livestock exclosure systems such as fencing, netting, expanded metal mesh, lids, and grate covers. Use a maximum netting mesh size of 1 ½ inches. The netting must not be in contact with fluids and must not have holes or gaps

Mitigation of tank battery and mud pit spills can be accomplished using special construction features, the use of permanent non-permeable pit liners to prevent leaching, appropriate berms constructed around the facilities, and leak detection systems. Upon completion of drilling, if it is determined that the well is a producer, access roads and the drill pad for this well must be surfaced with 6-inches of compacted caliche.

Consistent with 43 CFR 9212.1-3 and lease rights granted, the operator shall comply with fire prevention orders issued during times of very high fire danger.

Operators shall contact a BLM Surface Protection Specialist prior to surface abandonment operations for site specific objectives. Once the site is no longer in service or use, the site must undergo final abandonment. At final abandonment, the site and access roads must undergo "final" reclamation so that the character and productivity of the land are restored. Earthwork for final reclamation must be completed within six (6) months of the abandonment of the site. All pads and facility locations and roads must be reclaimed to a satisfactory revegetated, safe, and stable condition, unless an agreement is made with the landowner or BLM to keep the road and/or pad intact. After all disturbed areas have been satisfactorily prepared, these areas need to be revegetated with the seed mixture provided. Seeding should be accomplished by drilling on the contour whenever practical or by other approved methods. Seeding may need to be repeated until revegetation is successful, as determined by the BLM.

Closed-Loop System: Tanks are required for drilling operations: No reserve pits will be used for drill cuttings. The operator shall properly dispose of drilling contents at an authorized disposal site.

Open-Topped Tanks: The operator will take actions necessary to prevent wildlife and livestock access, including avian wildlife, to all open-topped tanks that contain or have the potential to contain salinity sufficient to cause harm to wildlife or livestock, hydrocarbons, or Resource Conservation and Recovery Act of 1976-exempt hazardous substances. At a minimum, the operator will net, screen, or cover open-topped tanks to exclude wildlife and livestock and prevent mortality. If the operator uses netting, the operator will cover and secure the open portion of the tank to prevent wildlife entry. The operator will net, screen, or cover the tanks until the operator removes the tanks from the location or the tanks no longer contain substances that could be harmful to wildlife or livestock.

Open-Vent Exhaust Stack Exclosures: The operator will construct, modify, equip, and maintain all open-vent exhaust stacks on production equipment to prevent birds and bats from entering, and to discourage perching, roosting, and nesting. The recommended exclosure structures on open-vent exhaust stacks are in the shape of a cone. Production equipment includes, but may not be limited to, tanks, heater-treaters, separators, dehydrators, flare stacks, in-line units, and compressor mufflers.

Containment Structures: At a minimum, the operator will install and maintain an impervious secondary containment system for any tank or barrel containing hazardous, poisonous, flammable, or toxic substances sufficient to contain the contents of the tank or barrel and any drips, leaks, and anticipated precipitation. Proposed production facilities such as storage tanks and other vessels will have a secondary containment structure that is constructed to hold the capacity of 1.5 times the largest tank, plus freeboard to account for precipitation, unless more stringent protective requirements are deemed necessary.

Exclosure Fencing (Cellars & Pits): The operator will install and maintain exclosure fencing for all open well cellars to prevent access to public, livestock, and large forms of wildlife before and after drilling operations until the well cellar is free of fluids and the operator initiates backfilling. (For examples of exclosure fencing design, refer to BLM's Oil and Gas Gold Book, Exclosure Fence Illustrations.) The operator will also install and maintain mesh netting for all open well cellars to prevent access to smaller wildlife before and after drilling operations until the well cellar is free of fluids and the operator. Use a maximum netting mesh size of 1 ½ inches. The netting must not have holes or gaps.

Flares: The flare line(s) discharge shall be located not less than 150 feet from the well head, having straight lines unless turns are targeted with running tees, and shall be positioned in a manner to compensate for wind changes, and shall be anchored. The flare system shall have an effective method for ignition. Where noncombustible gas is likely or expected to be vented, the system shall be provided supplemental fuel for ignition and to maintain a continuous flare. Flares shall be fitted with a device to prevent oil from being emitted into the air or off location. A fuel break shall be maintained around the flare site to prevent ignition of wildfires. All flammable products and debris shall be cleared and vegetation will be mowed (or trimmed where mowing is not practical) to a height not to exceed 4 inches. The fuel-break area will extend from the flare stack a total distance equal to 3 times the height of the flare stack.

Tank Battery: Tank battery locations will be lined and bermed. A 20-mil permanent liner will be installed with a 4 oz. felt backing to prevent tears or punctures. Tank battery berms must be large enough to contain 1 ½ times the content of the largest tank or 24-hour production, whichever is

greater. Automatic shut off, check valves, or similar systems will be installed for tanks to minimize the effects of catastrophic line failures used in production or drilling.

PAD CONSTRUCTION

Material from the pits should be used for the construction of the pad. Roads and the drill pad for this well must be surfaced with 6-inches of compacted caliche upon completion of well if it is determined to be a producer.

Topsoil: The operator shall strip the topsoil (the A horizon) from the entire well pad area and stockpile the topsoil along the edge of the well pad as depicted in the permit. **No more than the top 6 inches of topsoil shall be removed.** All the stockpiled topsoil will be redistributed over the interim reclamation areas. Topsoil shall not be used for berming the pad or facilities. For final reclamation, the topsoil shall be spread over the entire pad area for seeding preparation. Other subsoil (the B horizon and below) stockpiles must be completely segregated from the topsoil stockpile. Large rocks or subsoil clods (not evident in the surrounding terrain) must be buried within the approved area for interim and final reclamation.

Well Pad & Surfacing: Any surfacing material used to surface the well pad will be removed at the time of interim and final reclamation.

PRODUCTION (POST-DRILLING)

Placement of Production Facilities: Production facilities must be placed on the well pad to allow for maximum interim recontouring and revegetation of the well location.

Exclosure Netting (Open-Top Tanks): Immediately following active drilling or completion operations, the operator will take actions necessary to prevent wildlife and livestock access, including avian wildlife, to all open-topped tanks that contain or have the potential to contain salinity sufficient to cause harm to wildlife or livestock, hydrocarbons, or Resource Conservation and Recovery Act of 1976-exempt hazardous substances. At a minimum, the operator will net, screen, or cover open-topped tanks to exclude wildlife and livestock and prevent mortality. If the operator uses netting, the operator will cover and secure the open portion of the tank to prevent wildlife entry. The operator will net, screen, or cover the tanks until the operator removes the tanks from the location or the tanks no longer contain substances that could be harmful to wildlife or livestock. Use a maximum netting mesh size of 1 ½ inches. The netting must not be in contact with fluids and must not have holes or gaps.

Chemical and Fuel Secondary Containment and Exclosure Screening: The operator will prevent all hazardous, poisonous, flammable, and toxic substances from encountering soil and water. At a minimum, the operator will install and maintain an impervious secondary containment system for any tank or barrel containing hazardous, poisonous, flammable, or toxic substances sufficient to contain the contents of the tank or barrel and any drips, leaks, and anticipated precipitation. The operator will dispose of fluids within the containment system that do not meet applicable state or U. S. Environmental Protection Agency livestock water standards in accordance with state law; the operator must not drain the fluids to the soil or ground. The operator will design, construct, and maintain all secondary containment systems to prevent wildlife and livestock exposure to harmful substances. At a minimum, the operator will install effective wildlife and livestock exclosure systems such as fencing, netting, expanded metal mesh, lids, and grate covers. Use a maximum netting mesh size of 1 ½ inches.

Open-Vent Exhaust Stack Exclosures: The operator will construct, modify, equip, and maintain all open-vent exhaust stacks on production equipment to prevent birds and bats from entering, and to discourage perching, roosting, and nesting. **Recommended exclosure structures on open-vent exhaust stacks are in the shape of a cone.** Production equipment includes, but may not be limited to, tanks, heater-treaters, separators, dehydrators, flare stacks, in-line units, and compressor mufflers.

Containment Structures: Proposed production facilities such as storage tanks and other vessels will have a secondary containment structure that is constructed to hold the capacity of 1.5 times the largest tank, plus freeboard to account for precipitation, unless more stringent protective requirements are deemed necessary.

Reserve Pit

The reserve pit shall be constructed entirely in cut material and lined with 6 mil plastic. The reserve pit may be constructed in predominantly fill material if it is lined as specified above and a temporary or emergency pit may be constructed immediately adjacent to the reserve pit if the pit remains within the project boundary.

Reclamation of this type of deep pit will consist of pushing the pit walls into the pit when sufficiently dry to support track equipment. The pit liner is not to be ruptured to facilitate drying; a ten-month period after completion of the well is allowed for drying of the pit content. The pit area must be contoured to the natural terrain with all contaminated drilling mud buried with at least 3 feet of clean soil. The reclaimed area will then be seeded as specified in this permit. Reserve Pit construction and reclamation will be subject to the New Mexico Oil Conservation Division's Pit Construction and Closure Guidelines.

Special Stipulations

1. Archaeological, Paleontology & Historical Sites

Any cultural resource (historic or prehistoric site or object) discovered by the operator, or any person working on the operator's behalf, on the public or federal land shall be immediately reported to the Authorized Officer. The operator shall suspend all operations in the immediate area (within 100 ft) of such discovery until written authorization to proceed is issued by the Authorized Officer. An evaluation of the discovery will be made by the Authorized Officer, in conjunction with a BLM Cultural Resource Specialist, to determine appropriate actions to prevent the loss of significant scientific values. The operator shall be responsible for the cost of evaluation and any decision as to the proper mitigation measures will be made by the Authorized Officer after consulting with the operator.

Traditional Cultural Properties (TCPs) are protected by NHPA as codified in 36 CFR 800 for possessing traditional, religious, and cultural significance tied to a certain group of individuals. Though there are currently no designated TCPs within the project area or within a mile of the project area, it is possible for a TCP to be designated after the approval of this project. **If a TCP is designated in the project area after the project's approval, the BLM Authorized Officer will notify the operator of the following conditions and the duration for which these conditions are required.**

1. Temporary halting of all construction, drilling, and production activities to lower noise.
2. Temporary shut-off of all artificial lights at night.

The operator is hereby obligated to comply with procedures established in the Native American Graves Protection and Repatriation Act (NAGPRA), specifically NAGPRA Subpart B regarding discoveries, to protect human remains, associated funerary objects, sacred objects, and objects of cultural patrimony discovered during project work. If any human skeletal remains, funerary objects, sacred objects, or objects of cultural patrimony are discovered at any time during construction, all construction activities shall halt and a BLM-CFO Authorized Officer will be notified immediately. The BLM will then be required to be notified, in writing, within 24 hours of the discovery. The written notification should include the geographic location by county and state, the contents of the discovery, and the steps taken to protect said discovery. You must also include any potential threats to the discovery and a confirmation that all activity within 100 ft of the discovery has ceased, and work will not resume until written certification is issued. All work on the entire project must halt for a minimum of 3 days and work cannot resume until an Authorized Officer grants permission to do so.

Any paleontological resource discovered by the operator, or any person working on the operator's behalf, on public or Federal land shall be immediately reported to the Authorized Officer. The operator shall suspend all operations in the immediate area of such discovery until written authorization to proceed is issued by the Authorized Officer. The operator will be responsible for the cost of evaluation and any decision as to the proper mitigation measures will be made by the Authorized Officer after consulting with the operator.

2. Rangeland Resources

Cattleguards

An appropriately sized cattleguard(s) sufficient to carry out the project shall be installed and maintained at fence crossing(s). Any existing cattleguard(s) on the access road shall be repaired or replaced if they are damaged or have deteriorated beyond practical use. The operator shall be responsible for the condition of the existing cattleguard(s) that are in place and are utilized during lease operations. A gate shall be constructed on one side of the cattleguard and fastened securely to H-braces.

Fence Requirement

Where entry is granted across a fence line, the fence must be braced and tied off on both sides of the passageway prior to cutting. Once the work is completed, the fence will be restored to its prior condition, or better. The operator shall notify the private surface landowner or the grazing allotment holder prior to crossing any fence(s).

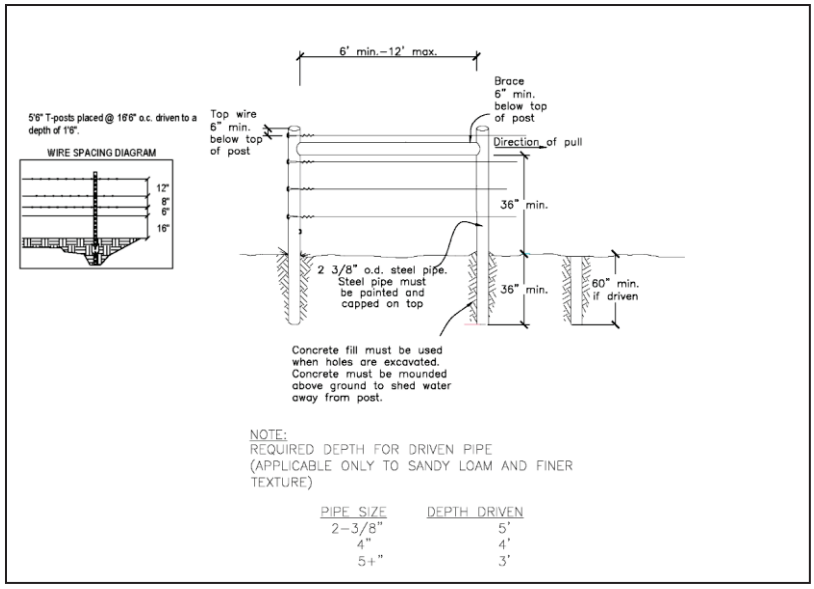

Figure 1: Pipe H-Brace Specifications

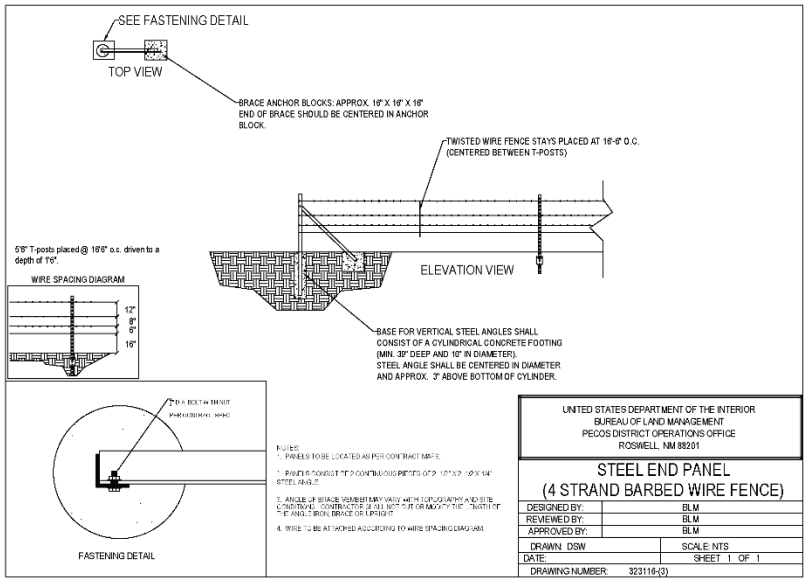

Figure 2: Angle Iron Brace Specifications

ESCAPE RAMPS

The operator will construct and maintain pipeline/utility trenches [that are not otherwise fenced, screened, or netted] to prevent livestock, wildlife, and humans from becoming entrapped. At a minimum, the operator will construct and maintain escape ramps, ladders, or other methods of avian and terrestrial wildlife escape in the trenches according to the following criteria:

a. Any trench left open for eight (8) hours or less is not required to have escape ramps; however, before the trench is backfilled, the contractor/operator shall inspect the trench for wildlife, remove all trapped wildlife, and release them alive at least 100 yards from the trench.
b. For trenches left open for eight (8) hours or more (or overnight), earthen escape ramps (built at no more than a 30-degree slope and spaced no more than 500 feet apart) shall be

placed in the trench. Before the trench is backfilled, the contractor/operator shall inspect the trench for wildlife, remove all trapped wildlife, and release them alive at least 100 yards from the trench.

c. Holder shall ensure safe passage for livestock and wildlife during construction of the welded pipe on surface prior to laying in the trench every quarter of a mile or at grazing permittees reasonable discretion.

Livestock Watering Requirement

Structures that provide water to livestock, such as windmills, pipelines, drinking troughs, and earthen reservoirs, will be avoided by moving the Proposed Action. ***Any damage to structures that provide water to livestock throughout the life of the project, caused by operations from the project, must be immediately corrected by the operator. The operator must notify the BLM office (575-234-5972) and the private surface landowner or the grazing allotment holder if any damage occurs to structures that provide water to livestock.***

Noxious Weeds

The operator shall be held responsible if noxious weeds become established within the areas of operations. Weed control shall be required on the disturbed land where noxious weeds exist, which includes associated roads, pipeline corridor and adjacent land affected by the establishment of weeds due to this action. The operator shall consult with the Authorized Officer for acceptable weed control methods, which include following EPA and BLM requirements and policies.

African Rue (*Peganum Harmala*)

If African Rue is present within the proposed project, the following stipulations apply:

Spraying: The spraying of African Rue must be completed by a licensed or certified applicator. In order to attempt to kill or remove African Rue the proper mix of chemical is needed. The mix consists of **4% Arsenal** (Imazapyr) and 2% Roundup (Glyphosate) along with a nonionic surfactant. Any other chemicals or combinations shall be approved by the BLM Noxious Weeds Coordinator prior to treatment. African Rue shall be sprayed in connection to any dirt working activities or disturbances to the site being sprayed. Spraying of African Rue shall be done on immature plants at initial growth through flowering and mature plants between budding and flowering stages. Spraying shall not be conducted after flowering when plant is fruiting. This will ensure optimal intake of chemical and decrease chances of developing herbicide resistance. After spraying, the operator or necessary parties must contact the Carlsbad Field Office to inspect the effectiveness of the application treatment to the plant species. No ground disturbing activities can take place until the inspection by the authorized officer is complete. ***The operator may contact the Environmental Protection Department or the BLM Noxious Weed Coordinator at (575) 234-5972 or BLM_NM_CFO_NoxiousWeeds@blm.gov.***

Management Practices: In addition to spraying for African Rue, good management practices should be followed. All equipment should be washed off using a power washer in a designated containment area. The containment area shall be bermed to allow for containment of the seed to prevent it from entering any open areas of the nearby landscape. The containment area shall be excavated near or adjacent to the well pad at a depth of three feet and just large enough to get equipment inside it to be washed off. This will allow all seeds to be in a centrally located area that can be treated later if the need arises.

3. HYDROLOGY

GENERAL CONSTRUCTION

- Any water erosion that may occur due to the construction of surface site and during the life of the surface site will be quickly corrected and proper measures will be taken to prevent future erosion.
    - Erosion control structures such as curled wood/straw fiber wattles/logs (plastic-free and weed-free), sandbags (with arsenic-free burlap), silt fences, diversion berms, or other soil erosion controls to slow water migration across disturbed areas should be installed during construction and reclamation or as needed.
    - Regular monitoring of any erosion control structures placed in or along the surface site is recommended, both following precipitation events and regularly during monsoon season (June – September.)
    - If during construction of this project any erosion control structures installed to protect adjacent permitted disturbance are damaged, the holder of the ROW/surface site under construction must repair or replace those structures with an equivalent structure.
    - If erosion control structures are incorrectly installed or poorly maintained such that they result in erosional impacts on adjacent permitted disturbance, the operator responsible for the disturbance must repair any damage in addition to any damage within their own permitted ROW/surface site.
- Any spills or leaks will be reported to the BLM immediately for their immediate and proper treatment.

ACCESS ROAD(S)

- The submitter is responsible for maintenance of the road.
- When crossing ephemeral drainages, low water crossings or culverts should be installed as appropriate.
    - Low water crossings should be adequately armored with gabions, rock aprons and/or riprap.
    - If culverts are employed, they should be of installed at adequate depth and be of adequate size for the potential streamflow volume expected in a 100-year flood event. To reduce the erosion around culvert entrances, gabions, rock aprons and/or riprap should be placed on both the inflow and outflow sides. A flared culvert is also recommended to further reduce erosion around culvert entrances.
    - As appropriate, rock check dams should be installed above and/or below the drainage crossing to further reduce erosion potential.
- Turnout ditches/drainage leadoffs should be installed along the project boundary at every 5-foot change in elevation. Turnout ditches and drainage leadoffs should not be constructed in such a manner as to alter the natural flow of water into or out of naturally occurring drainage features.
- Water bars should be placed within the project boundary to divert and dissipate surface runoff.

CABLE(S)

- A power pole should not be placed in drainages, playas, wetlands, riparian areas, or floodplains and must span across the features at a distance away that would not promote further erosion.

PIPELINE(S)

- When crossing ephemeral drainages (marked and unmarked), the pipeline(s) will be buried to a minimum depth of 48 inches from the top of pipe to ground level. In ephemeral flow paths, rivers, and streams excess soil is to be compacted, contoured, and level to ground surface, allowing water to flow in its natural state. Additional seeding may be required in floodplains and drainages to restore energy dissipating vegetation.
- Prior to pipeline installation/construction, a leak detection plan will be developed. The method(s) could incorporate gauges to detect pressure drops, situating valves and lines so they can be visually inspected periodically or installing electronic sensors to alarm when a leak is present. The leak detection plan should incorporate an automatic shut-off system or manual shut-off valves with active monitoring to minimize the effects of an undesirable event.
- Regular monitoring is required to quickly identify leaks for their immediate and proper treatment.

Temporary Use Fresh Water Frac Line(s)

- Once the temporary use exceeds the timeline of 180 days and/or with a 90-day extension status; further analysis will be required if the applicant pursues to turn the temporary pipeline into a permanent pipeline.
- The pipeline is to not obstruct ephemeral drainages or streams, allowing water to flow in its natural state unobstructed.
- Prior to pipeline installation/construction, a leak detection plan will be developed. The method(s) could incorporate gauges to detect pressure drops, situating valves and lines so they can be visually inspected periodically or installing electronic sensors to alarm when a leak is present. The leak detection plan should incorporate an automatic shut-off system or manual shut-off valves with active monitoring to minimize the effects of an undesirable event.
- Regular monitoring is required to quickly identify leaks for their immediate and proper treatment.

SURFACE SITE AND/OR PAD

- The entire surface site/pad(s) will be bermed to prevent oil, salt, and other chemical contaminants from leaving the well pad. No waterflow from the uphill side(s) of the pad shall be allowed to enter the well pad.
- Topsoil shall not be used to construct the berm. The compacted berm should be constructed at a minimum of 12 inches with impermeable mineral material (e.g. caliche).
- The integrity of the berm shall be maintained around the surfaced pad throughout the life of the well and around the downsized pad after interim reclamation has been completed.
- Any water erosion that may occur due to the construction of the well pad during the life of the well will be immediately corrected and proper measures will be taken to prevent future erosion.

- Stockpiling of topsoil is required. The topsoil shall be stockpiled in an appropriate location with wattles (recommended minimum 9" height) surrounding the stockpiled soil to prevent soil loss due to water/wind erosion. The wattles are to be maintained throughout the life of the project.
- If fluid collects within the bermed area, the fluid must be vacuumed into a safe container and disposed of properly at a state-approved facility.

4. Wildlife

Raptor Nest Mitigation (includes Burrowing Owls)

- A BLM Wildlife Biologist must be contacted by the operator prior to construction activities to determine if the raptor nest is active.
- Raptor nests on special, natural habitat features, such as trees, large brush, cliff faces and escarpments, will be protected by not allowing surface disturbance within up to 200 meters of nests or by delaying activity for up to 90 days, or a combination of both. Exceptions to this requirement for raptor nests are considered if the nests expected to be disturbed are inactive, the proposed activity is of short duration (e.g. habitat enhancement projects, fences, pipelines) and will not result in continuing activity in proximity to the nest.
- Exhaust noise from pump jack engines or other equipment must be muffled or otherwise controlled so as not to exceed 75 dB measured at 30 ft. from the source of the noise.

Lesser Prairie Chicken

Timing Limitation Stipulation/Condition of Approval for Lesser Prairie-Chicken: Oil and gas activities including 3-D geophysical exploration, and drilling will not be allowed in lesser prairie-chicken habitat during the period from March 1st through June 15th annually. During that period, other activities that produce noise or involve human activity, such as the maintenance of oil and gas facilities, geophysical exploration other than 3-D operations, and pipeline, road, and well pad construction, will be allowed except between 3:00 am and 9:00 am. The 3:00 am to 9:00 am restriction will not apply to normal, around-the-clock operations, such as venting, flaring, or pumping, which do not require a human presence during this period. Additionally, no new drilling will be allowed within up to 200 meters of leks known at the time of permitting. Normal vehicle use on existing roads will not be restricted. Exhaust noise from pump jack engines must be muffled or otherwise controlled so as not to exceed 75 dB measured at 30 ft. from the source of the noise.

Timing Limitation Exceptions: The Carlsbad Field Office will publish an annual map of where the LPC timing and noise stipulations and conditions of approval (Limitations) will apply for the identified year (between March 1 and June 15) based on the latest survey information. The LPC Timing Area map will identify areas which are Habitat Areas (HA), Isolated Population Area (IPA), and Primary Population Area (PPA). The LPC Timing Area map will also have an area in red crosshatch. The red crosshatch area is the only area where an operator is required to submit a request for exception to the LPC Limitations. If an operator is operating outside the red crosshatch area, the LPC Limitations do not apply for that year and an exception to LPC Limitations is not required.

Ground-level Abandoned Well Marker to Avoid Raptor Perching: Upon the plugging and subsequent abandonment of the well, the well marker will be installed at ground level on a plate containing the pertinent information for the plugged well. **For more installation details, contact the Carlsbad Field Office at BLM_NM_CFO_Construction_Reclamation@blm.gov.**

Dunes Sagebrush Lizard

- Pre-construction contact with a BLM wildlife biologist is required within 5 days before any ground disturbing activities associated with the project occur.
- Successful completion of the BLM Trench Stipulation Workshop is required for a non-agency person to be approved as a monitor.
- Any trench left open for (8) hours or less is not required to have escape ramps; however, before the trench is backfilled, an agency approved monitor shall walk the entire length of the open trench and remove all trapped vertebrates. The bottom surface of the trench will be disturbed a minimum of 2 inches to arouse any buried vertebrates. All vertebrates will be released alive at least 100 yards from the trench.
- For trenches left open for eight (8) hours or more the following requirements apply:
    - Earthen escape ramps and/or structures (built at no more than a 30-degree slope and spaced no more than 500 feet apart) shall be placed in the trench. Metal structures will not be authorized. Options will be discussed in detail at the required Trench Stipulation Workshop.
    - One approved monitor shall be required to survey up to three miles of trench between the hours of 11 AM-2 PM. A daily report (consolidate if there is more than one monitor) on the vertebrates found and removed from the trench shall be provided to the BLM (email/fax is acceptable) the following morning.
    - Prior to backfilling of the trench all structures used as escape ramps will be removed, and the bottom surface of the trench will be disturbed by a minimum of 2 inches to arouse any buried vertebrates. All vertebrates will be released alive a minimum of 100 yards from the trench.
- This stipulation shall apply to the entire length of the project in the DSL habitat polygon regardless of land ownership or CCA/CCAA enrollment status.
- A project closeout will be required within three business days of the completion of the project.

5. Visual Resource Management

General Requirements

- **Painting:** All permanent surface structures (except those subject to safety-color requirements), including piping 4 inches or greater, shall be painted with a flat, non-reflective finish selected from the BLM Standard Environmental Color Chart (CC-001: June 2008). The color specified for this project is **Shale Green**.
- **Form / Line / Texture Minimization:** The Holder shall minimize structure heights and lengths, avoid sky lining, break up continuous lines and planar faces, and orient facilities to reduce strong horizontal/vertical lines visible from KOPs.

Night Skies

- **Shielding:** All permanent exterior lighting fixtures associated with the project shall be full-cutoff (zero up-light) as defined by the Illuminating Engineering Society of North America (IESNA). Fixtures shall be installed such that no light is emitted above 80 degrees nadir and light distribution is confined to the intended work area.

- **Lighting Intensity:** Lighting intensity shall not exceed 0.5 foot-candles at the project boundary unless higher levels are required to meet OSHA or MUTCD safety standards.
- **Correlated Color Temperature (CCT):** All permanent lighting fixtures shall have a CCT of 3,500 Kelvin or lower. High-intensity discharge fixtures (mercury vapor, metal halide) are prohibited. Acceptable fixtures include low-pressure sodium or warm-spectrum LED. No bluish-white lighting shall be used in permanent outdoor lighting.
- **Temporary Lighting:** The Holder shall remove all temporary lighting within 30 days of construction completion or cessation of nighttime work unless otherwise approved in writing by the AO.

Reclamation

Stipulations required by the Authorized Officer on specific actions may differ from the following general guidelines.

1. Road And Site Reclamation

Any roads constructed during the life of the well will have the caliche removed or linear burial. If contaminants are indicated then testing will be required for chlorides and applicable contamination anomalies for final disposal determination (disposed of in a manner approved by the Authorized Officer within Federal, State and Local statutes, regulations, and ordinances) and seeded to the specifications listed below.

2. Erosion Control

Install erosion control berms, windrows, and hummocks. Windrows must be level and constructed perpendicular to down-slope drainage; steeper slopes will require greater windrow density. Topsoil between windrows must be ripped to at least 12”, unless bedrock is encountered. Any large boulders pulled up during ripping must be deep buried on location. Ripping must be perpendicular to down-slope. The surface must be left rough to catch and contain rainfall on-site. Any trenches resulting from erosion caused by run-off shall be addressed immediately.

3. Interim Reclamation

During the life of the development, all disturbed areas not needed for active support of production operations must undergo interim reclamation to minimize the environmental impacts of development on other resources and uses.

Within six (6) months of well completion, operators must work with BLM surface protection specialists (BLM_NM_CFO_Construction_Reclamation@blm.gov) to devise the best strategies to reduce the size of the location. Interim reclamation must allow for remedial well operations, as well as safe and efficient removal of oil and gas.

During reclamation, the removal of caliche and any other surface material is required. Removed caliche that is free of contaminants may be used for road repairs, fire walls or for building other roads and locations. To operate the well or complete workover operations, it may be necessary to drive, park and operate on restored interim vegetation within the previously disturbed area. Disturbing revegetated areas for production or workover operations will be allowed. If there is significant disturbance and loss of vegetation, the area will need to be revegetated. Communicate with the appropriate BLM office for any exceptions / exemptions if needed.

All disturbed areas after they have been satisfactorily prepared need to be reseeded with the seed mixture provided below.

Upon completion of interim reclamation, the operator shall submit a Sundry Notice, Subsequent Report of Reclamation (Form 3160-5).

4. Final Abandonment & Reclamation

Prior to surface abandonment, the operator shall submit a Notice of Intent Sundry Notice and reclamation plan.

At final abandonment, well locations, production facilities, and access roads must undergo "final" reclamation so that the character and productivity of the land are restored.

Earthwork for final reclamation must be completed within six (6) months of well plugging. All pads, pits, facility locations and roads must be reclaimed to a satisfactory revegetated, safe, and stable condition, unless an agreement is made with the landowner or BLM to keep the road and/or pad intact.

After all disturbed areas have been satisfactorily prepared, these areas need to be revegetated with the seed mixture provided below. Seeding will be accomplished by drilling on the contour whenever practical or by other approved methods. Seeding may need to be repeated until revegetation is successful, as determined by the BLM. After earthwork and seeding is completed, the operator is required to submit a Sundry Notice, Subsequent Report of Reclamation.

Operators shall contact a BLM surface protection specialist prior to surface abandonment operations for site specific objectives (BLM_NM_CFO_Construction_Reclamation@blm.gov).

5. Seeding Requirements

Seeding Techniques

Seeds shall be hydro-seeded, mechanically drilled, or broadcast, with the broadcast-seeded area raked, ripped or dragged to aid in covering the seed. The seed mixture shall be evenly and uniformly planted over the disturbed area.

After all disturbed areas have been satisfactorily prepared, these areas need to be revegetated with the seed mixture provided within. Seeding will be accomplished by drilling on the contour whenever practical or by other approved methods. Seeding may need to be repeated until revegetation is successful, as determined by the BLM.

Soil Specific Seed Mixture

The holder shall seed all the disturbed areas with the seed mixture listed below. The seed mixture shall be planted in the amounts specified in pounds of pure live seed (PLS)* per acre. There shall be no primary or secondary noxious weeds in the seed mixture. Seed will be tested and the viability testing of seed will be done in accordance with State law(s) and within nine (9) months prior to purchase. Commercial seed will be either certified or registered seed. The seed container will be tagged in accordance with State law(s) and available for inspection by the authorized officer.

Seed will be planted using a drill equipped with a depth regulator to ensure proper depth of planting where drilling is possible. The seed mixture will be evenly and uniformly planted over the disturbed area (smaller/heavier seeds have a tendency to drop the bottom of the drill and are planted first). The holder shall take appropriate measures to ensure this does not occur. Where drilling is not possible, seed will be broadcast and the area shall be raked or chained to cover the seed. When

broadcasting the seed, the pounds per acre are to be doubled. The seeding will be repeated until a satisfactory stand is established as determined by the authorized officer. Evaluation of growth will not be made before completion of at least one full growing season after seeding.

We encourage the addition of a cover crop to the seed mix, but it is not required. Depending on timing you can add:

- Oats in the spring,
- Triticale in the fall,
- Winter Wheat in the fall,
- Millet in the summer, and / or
- Sorghum in the summer.

Feel free to call Carlsbad BLM Field Office if you have any questions.

$$\textbf{\textit{Pounds of Pure Live Seed}} = Pounds\ of\ Seed * Percent\ Purity * Percent\ Germination$$

SEED MIXTURE 2 FOR LESSER PRAIRIE CHICKEN SAND AND / OR SHINNERY SITES

Species to be planted in **Pounds of Pure Live Seed** per acre:

Species	lb/acre
Plains Bristlegrass (*Setaria macrostachya)*	5.0
Sand Bluestem (*Andropogon hallii*)	5.0
Little Bluestem (*Schizachyrium scoparium*)	3.0
Big Bluestem (*Andropogon gerardii*)	6.0
Plains Coreopsis (*Coreopsis tinctoria*)	2.0
Sand Dropseed (*Sporobolus cryptandrus)*	1.0

For this mix, it is recommended to add **10 lbs./acre** of cover crop, if utilized.

General Provisions

1. The BLM shall administer compliance and monitor construction of the disturbance. Notify the Carlsbad Office at BLM_NM_CFO_Construction_Reclamation@blm.gov at least 3-working days prior to commencing construction of the access road and/or well pad.
2. The failure of the operator to comply with these requirements may result in the assessment of liquidated damages or penalties. A copy of these stipulations and survey plat and / or map will be on location during construction, drilling and reclamation activity. BLM personnel may request a copy of your permit during construction to ensure compliance with all stipulations.
3. The holder / operator shall conduct all activities associated with the construction, operation, and termination of the right-of-way within the authorized limits of the right-of-way.
4. The holder shall indemnify the United States against any liability for damage to life or property arising from the occupancy or use of public lands under this grant.
5. The holder shall be liable for damage or injury to the United States to the extent provided by 43 CFR § 2803 & 2883. The holder shall be held to a standard of strict liability for damage or injury to the United States resulting from fire or soil movement

(including landslides and slumps as well as wind and water caused movement of particles) caused or substantially aggravated by any of the following within the right-of-way or permit area:

a. Activities of the holder, including but not limited to, construction, operation, maintenance, and termination of the facility.
b. Activities of other parties including but not limited to:
   i. Land clearing.
   ii. Earth-disturbing and earth-moving work.
   iii. Blasting.
   iv. Vandalism and sabotage.
c. Acts of God.

The maximum limitation for such strict liability damages shall not exceed one million dollars ($1,000,000) for any one event and any liability in excess of such amount shall be determined by the ordinary rules of negligence of the jurisdiction of in which the damage of injury occurred. This section shall not impose strict liability for damage or injury resulting primarily from the negligent acts of the United States.

If, during any phase of the construction, operation, maintenance, or termination of the site or related pipeline(s), any oil or other pollutant should be discharged from site facilities, the pipeline(s) or from containers or vehicles impacting Federal lands, the control and total removal, disposal, and cleanup of such oil of other pollutant, wherever found, shall be the responsibility of the holder, regardless of fault. Upon failure of the holder to control, dispose of, or clean up such discharge on or affecting Federal lands, or to repair all damages to Federal lands resulting therefrom, the Authorized Officer may take such measures as deemed necessary to control and cleanup the discharge and restore the area, including, where appropriate, the aquatic environment and fish and wildlife habitats, at the full expense of the holder. Such action by the Authorized Officer shall not relieve the holder of any liability or responsibility.

6. The operator will notify the Bureau of Land Management (BLM) authorized officer and nearest Fish and Wildlife Service (FWS) Law Enforcement office within 24 hours, if the operator discovers a dead or injured federally protected species (i.e., migratory bird species, bald or golden eagle, or species listed by the FWS as threatened or endangered) in or adjacent to a pit, trench, tank, exhaust stack, or fence. (If the operator is unable to contact the FWS Law Enforcement office, the operator must contact the nearest FWS Ecological Services office.)

7. The holder shall comply with all applicable Federal laws and regulations existing or hereafter enacted or promulgated. In any event, the holder shall comply with the Toxic Substances Control Act of 1976, as amended (15 U.S.C. §§ 2601) regarding any toxic substances that are used, generated by or stored. Additionally, any release of toxic substances (leaks, spills, etc.) more than the reportable quantity established by 40 CFR § 117 shall be reported as required by the Comprehensive Environmental Response, Compensation and Liability Act, Section 102b. A copy of any report required or requested by any Federal agency or State government because of a reportable release or spill of any toxic substances shall be furnished to the Authorized Officer concurrent with the filing of the reports to the Federal agency or State government involved.

8. The holder agrees to indemnify the United States against any liability arising from the release of any hazardous substance or hazardous waste (as these terms are defined in the Comprehensive Environmental Response, Compensation and Liability Act of 1980, 42 U.S.C. §§ 9601 or the Resource Conservation and Recovery Act, 42 U.S.C. §§ 6901) on the right-of-way (unless the release or threatened release is wholly unrelated to the right-of-way holder's activity on the right-of-way). This agreement applies without regard to whether a release is caused by the holder, its agent, or unrelated third parties.
9. Sites shall always be maintained in an orderly, sanitary condition. Porto-johns and trash containers will be on-location during fracturing operations or any other crew-intensive operations. All trash, debris and other waste materials shall be contained in trash cages or bins to prevent scattering. Burial on site is not permitted. Waste materials, both liquid and solid, shall be disposed of promptly at an appropriate, authorized waste disposal facility in accordance with all applicable State and Federal laws. "Waste" means all discarded matter including, but not limited to, human waste, trash, garbage, refuse, petroleum products, brines, chemicals, oil drums, ashes, and equipment.
10. The BLM serial number assigned to this right-of-way grant shall be posted at the points of origin and completion of the right-of-way (or entry to and exit from public lands), all major road crossings, and at all serviced facilities. Numbers will be at least two inches high and will be affixed to the pole nearest the road crossing and at the facilities served. These signs will be posted in a permanent, conspicuous manner, and will be maintained in a legible condition for the term of the right-of-way.
11. A sales contract for removal of mineral material (caliche, sand, gravel, fill dirt) from an authorized pit, site, or on location must be obtained from the BLM prior to commencing construction. **Removal of any additional material from this location for construction or improvement of other well pads and other access or lease roads must first be purchased from BLM.** Removal of any material from the project boundary for use on other leases or roads must first be purchased from BLM.
12. The operator shall minimize disturbance to existing fences and other improvements on public lands. The operator is required to promptly repair improvements to at least their former state. Functional use of these improvements will be always maintained. The operator will contact the owner of any improvements prior to disturbing them. When necessary to pass through a fence line, the fence shall be braced on both sides of the passageway prior to cutting of the fence. No permanent gates will be allowed unless approved by the Authorized Officer.
13. In those areas where erosion control structures are required to stabilize soil conditions, the holder shall install such structures as are suitable for specific soil conditions being encountered and which are in accordance with sound management practices. Any earthwork will require prior approval by the Authorized Officer.
14. Any vegetation, soil, and rocks left because of construction, drilling, or maintenance activity will be randomly scattered over the project area and will not be left in rows, piles, or berms, unless otherwise approved by the authorized officer. The backfilled soil shall be compacted, and a 6-inch berm will be left over the ditch line to allow for settling back to grade. The holder shall stockpile an adequate amount of topsoil where blading occurs. The topsoil to be stripped is approximately 6-inches in depth. The topsoil will be segregated from other spoil piles. Following backfilling and

recontouring, the topsoil will be evenly distributed over the bladed area for the preparation of seeding. The entire corridor shall be recontoured to match the surrounding landscape.

15. Upon cancellation, relinquishment, or expiration of this grant, the holder shall comply with those abandonment procedures as prescribed by the Authorized Officer. All surface structures shall be removed within 180 days of abandonment, relinquishment, or termination of use of the serviced facilities or this grant, whichever comes first. This will not apply where the facilities extend to serving an active, adjoining facility. At final abandonment, well locations, production facilities, and access roads must undergo "final" reclamation so that the character and productivity of the land are restored. All pads, pits, facility locations and roads must be reclaimed to a satisfactory revegetated, safe, and stable condition, unless an agreement is made with the landowner or BLM to keep the road and/or pad intact.

PECOS DISTRICT
DRILLING CONDITIONS OF APPROVAL

OPERATOR'S NAME:	MEWBOURNE OIL COMPANY
WELL NAME & NO.:	COW BELL 9/4 FED COM 907H
APD ID:	10400113693
SURFACE LOCATION:	Section 9, T19S, R34E. NMP.
COUNTY:	Eddy County, New Mexico

COA

H_2S	○ No		◉ Yes	
Potash / WIPP	◉ None	○ Secretary	○ R-111-Q	☐ Open Annulus ☐ WIPP
Cave / Karst	◉ Low	○ Medium	○ High	○ Critical
Wellhead	○ Conventional	◉ Multibowl	○ Both	○ Diverter
Cementing	☐ Primary Squeeze	☐ Cont. Squeeze	☐ EchoMeter	☑ DV Tool
Special Req	☐ Capitan Reef	☐ Water Disposal	☑ COM	☐ Unit
Waste Prev.	○ Self-Certification	◉ Waste Min. Plan	○ APD Submitted prior to 06/10/2024	
Additional Language	☑ Flex Hose ☐ Four-String	☐ Casing Clearance ☑ Offline Cementing	☐ Pilot Hole ☑ Fluid-Filled	☑ Break Testing

A. HYDROGEN SULFIDE

A Hydrogen Sulfide (H_2S) Drilling Plan shall be activated at Spud. As a result, the Hydrogen Sulfide area must meet **43 CFR 3176** requirements, which includes equipment and personnel/public protection items. If Hydrogen Sulfide is encountered, please provide measured values and formations to the BLM.

B. CASING DESIGN

1. The **13-3/8** inch surface casing shall be set at approximately **1815 ft.** (a minimum of 70 feet into the Rustler Anhydrite, below usable water and above the salt) and cemented to the surface. **If salt is encountered, set casing at least 25 ft. above the salt.**
   a. If cement does not circulate to the surface, the appropriate BLM office shall be notified and a temperature survey utilizing an electronic-type temperature survey with surface log readout will be used or a cement bond log shall be run to verify the top of the cement. Temperature survey will be run a minimum of six hours after pumping cement and ideally between 8-10 hours after completing the cement job.
   b. Wait on cement (WOC) time for a primary cement job will be a minimum of **8 hours** or **500 psi compressive strength**, whichever is greater. (This is to

include the lead cement)

c. Wait on cement (WOC) time for a remedial job will be a minimum of 4 hours after bringing cement to surface or 500 pounds compressive strength, whichever is greater.
d. If cement falls back, remedial cementing will be done prior to drilling out that string.

2. The **9-5/8** inch intermediate casing shall be set in a competent bed (Tansill/Yates formation) at approximately **3,500 ft.** The minimum required fill of cement behind the **9-5/8** inch intermediate casing is:

   - **Cement to surface.** If cement does not circulate see B.1.a, c-d above.

3. Operator has proposed to set **7-5/8 in.** production casing at approximately **12,474 ft.** (Landing point in Design A) or **11,574 ft.** (KOP in Design B). The minimum required fill of cement behind the **7-5/8 in.** production casing is:

   Option 1 (Single Stage): Cement should tie-back **at least 200 feet** into previous casing string. Operator shall provide method of verification. Operator shall use one of the approved methods for cement verification located in the **General Requirements, Section A.1**.

   Option 2 (Two-Stage): The operator has proposed utilizing a DV tool. Operator may adjust depth of DV tool if needed, adjust cement volumes accordingly. The DV tool may be cancelled if cement circulates to surface on the first stage.

   a. **First stage to DV tool:** Cement to circulate. If cement does not circulate off the DV tool, contact the appropriate BLM office before proceeding with second stage cement job.
   b. **Second stage above DV tool:** Cement should tie-back **at least 200 feet** into previous casing string. Operator shall provide method of verification. Operator shall use one of the approved methods for cement verification located in the **General Requirements, Section A.1**.

   Note: The production casing must be kept fluid-filled to meet minimum safety factor requirement against collapse.

4. The minimum required fill of cement behind the **5-1/2 in.** production liner is:
   - Cement should tie-back **at least 100 feet** into previous casing string. Operator shall provide method of verification.

Offline Cementing

Operator has been **(Approved)** to pump the proposed cement program offline in the **Surface and intermediate(s) intervals**. Offline cementing should commence within 24 hours of landing the casing for the interval. Notify the BLM 4hrs prior to the commencement of any offline cementing procedure.

C. PRESSURE CONTROL

1. Variance approved to use **flex line** from BOP to choke manifold. Manufacturer's specification to be readily available. No external damage to flex line. Flex line to be installed as straight as possible (no hard bends).
2. Operator has proposed a multi-bowl wellhead assembly. This assembly will only be tested when installed on the surface casing. Minimum working pressure of the blowout preventer (BOP) and related equipment (BOPE) required for drilling below the surface casing shoe shall be **10,000 (10M)** psi. Variance is approved to use a 5M annular preventer with 10M BOP/BOPE. The BOP/BOPE shall be pressure-tested in accordance with **title 43 CFR 3172.**
    a. Wellhead shall be installed by manufacturer's representatives, submit documentation with subsequent sundry.
    b. If the welding is performed by a third party, the manufacturer's representative shall monitor the temperature to verify that it does not exceed the maximum temperature of the seal.
    c. Manufacturer representative shall install the test plug for the initial BOP test.
    d. If the cement does not circulate and one-inch operations would have been possible with a standard wellhead, the well head shall be cut off, cementing operations performed and another wellhead installed.
    e. Whenever any seal subject to test pressure is broken, all the tests in the **title 43 CFR 3172.6(b)(9)** must be followed.

BOPE Break Testing Variance

- BOPE Break Testing is ONLY permitted for intervals utilizing a 5M BOPE or less. **(Annular preventer must be tested to a minimum of 70% of BOPE working pressure and shall be higher than the MASP.)**
- BOPE Break Testing is NOT permitted to drilling the production hole section.
- Variance only pertains to the intermediate hole-sections and no deeper than the Bone Springs formation.
- While in transfer between wells, the BOPE shall be secured by the hydraulic carrier or cradle.
- Any well control event while drilling require notification to the BLM Petroleum Engineer **(575-706-2779)** prior to the commencement of any BOPE Break Testing operations.
- A full BOPE test is required prior to drilling the first deep intermediate hole section. If any subsequent hole interval is deeper than the first, a full BOPE test will be required. (200' TVD tolerance between intermediate shoes is allowable).
- The BLM is to be contacted 4 hours prior to BOPE tests.
- As a minimum, a full BOPE test shall be performed at 21-day intervals.
- In the event any repairs or replacement of the BOPE is required, the BOPE shall test as per **43 CFR 3172**.
- If in the event break testing is not utilized, then a full BOPE test would be conducted.

D. SPECIAL REQUIREMENT (S)

Communitization Agreement

- The operator will submit a Communitization Agreement to the Santa Fe Office, 301 Dinosaur Trail Santa Fe, New Mexico 87508, at least 90 days before the anticipated date of first production from a well subject to a spacing order issued by the New Mexico Oil Conservation Division. The Communitization Agreement will include the signatures of all working interest owners in all Federal and Indian leases subject to the Communitization Agreement (i.e., operating rights owners and lessees of record), or certification that the operator has obtained the written signatures of all such owners and will make those signatures available to the BLM immediately upon request.

- The operator will submit an as-drilled survey well plat of the well completion, including but not limited to those specified in 43 CFR 3171 and 3172.
- If the operator does not comply with this condition of approval, the BLM may take enforcement actions that include, but are not limited to, those specified in 43 CFR 3163.1.

- In addition, the well sign shall include the surface and bottom hole lease numbers. When the Communitization Agreement number is known, it shall also be on the sign.

GENERAL REQUIREMENTS

The BLM is to be notified in advance for a representative to witness:

a. Spudding well (minimum of 24 hours)
b. Setting and/or Cementing of all casing strings (minimum of 4 hours)
c. BOPE tests (minimum of 4 hours)

Contact BLM Inspection Staff:
Email blm_nm_cfo_drillingnotifications@blm.gov; The inspector on call phone, 575-361-2822, will remain active as a secondary contact for notifications; calls only, text messages are not accepted at this number.

1. Unless the production casing has been run and cemented or the well has been properly plugged, the drilling rig shall not be removed from over the hole without prior approval.
   a. In the event the operator has proposed to drill multiple wells utilizing a skid/walking rig. Operator shall secure the wellbore on the current well, after installing and testing the wellhead, by installing a blind flange of like pressure rating to the wellhead and a pressure gauge that can be monitored while drilling is performed on the other well(s).
   b. When the operator proposes to set surface casing with Spudder Rig
      i. Notify the BLM when moving in and removing the Spudder Rig.

ii. Notify the BLM when moving in the 2nd Rig. Rig to be moved in within 90 days of notification that Spudder Rig has left the location.
iii. BOP/BOPE test to be conducted per **43 CFR 3172** as soon as 2nd Rig is rigged up on well.

2. Floor controls are required for 3M or Greater systems. These controls will be on the rig floor, unobstructed, readily accessible to the driller and will be operational at all times during drilling and/or completion activities. Rig floor is defined as the area immediately around the rotary table; the area immediately above the substructure on which the draw works are located, this does not include the doghouse or stairway area.
3. For intervals in which cement to surface is required, cement to surface should be verified with a visual check and density or pH check to differentiate cement from spacer and drilling mud. The results should be documented in the driller's log and daily reports.

A. CASING & CEMENTING

1. The current acceptable methods of cement verification are as follows:
i. Observing cement circulated to surface,
ii. Cement Bond Log (CBL),
iii. Temperature log within 8-10 hours after completing the cement job,
iv. Echometer (if a second-stage bradenhead is being utilized and operator was granted approval prior to operations.)

2. Changes to the approved APD casing program need prior approval if the items substituted are of lesser grade or different casing size or are Non-API. The Operator can exchange the components of the proposal with that of superior strength (i.e. changing from J-55 to N-80, or from 36# to 40#). Changes to the approved cement program need prior approval if the altered cement plan has less volume or strength or if the changes are substantial (i.e. Multistage tool, ECP, etc.). The initial wellhead installed on the well will remain on the well with spools used as needed.

3. Wait on cement (WOC) for Potash Areas: After cementing but before commencing any tests, the casing string shall stand cemented under pressure until both of the following conditions have been met: 1) cement reaches a minimum compressive strength of 500 psi for all cement blends of both lead and tail cement, 2) until cement has been in place at least 8 hours. WOC time will be recorded in the driller's log. The casing integrity test can be done (prior to the cement setting up) immediately after bumping the plug.

4. Wait on cement (WOC) for Water Basin: After cementing but before commencing any tests, the casing string shall stand cemented under pressure until both of the following conditions have been met: 1) cement reaches a minimum

compressive strength of 500 psi at the shoe, 2) until cement has been in place at least 8 hours. WOC time will be recorded in the driller's log. See individual casing strings for details regarding lead cement slurry requirements. The casing integrity test can be done (prior to the cement setting up) immediately after bumping the plug.

5. Provide compressive strengths including hours to reach required 500 pounds compressive strength prior to cementing each casing string. Have well specific cement details onsite prior to pumping the cement for each casing string.
6. No pea gravel permitted for remedial or fall back remedial without prior authorization from the BLM engineer.
7. On that portion of any well approved for a 5M BOPE system or greater, a pressure integrity test of each casing shoe shall be performed. Formation at the shoe shall be tested to a minimum of the mud weight equivalent anticipated to control the formation pressure to the next casing depth or at total depth of the well. This test shall be performed before drilling more than 20 feet of new hole.
8. If hardband drill pipe is rotated inside casing, returns will be monitored for metal. If metal is found in samples, drill pipe will be pulled and rubber protectors which have a larger diameter than the tool joints of the drill pipe will be installed prior to continuing drilling operations.
9. Whenever a casing string is cemented in the R-111-Q potash area, the NMOCD requirements shall be followed.

B. PRESSURE CONTROL

1. All blowout preventer (BOP) and related equipment (BOPE) shall comply with well control requirements as described in **43 CFR 3172**.
2. If a variance is approved for a flexible hose to be installed from the BOP to the choke manifold, the following requirements apply: The flex line must meet the requirements of API 16C. Check condition of flexible line from BOP to choke manifold, replace if exterior is damaged or if line fails test. Line to be as straight as possible with no hard bends and is to be anchored according to Manufacturer's requirements. The flexible hose can be exchanged with a hose of equal size and equal or greater pressure rating. Anchor requirements, specification sheet and hydrostatic pressure test certification matching the hose in service, to be onsite for review. These documents shall be posted in the company man's trailer and on the rig floor.
3. 5M or higher system requires an HCR valve, remote kill line and annular to match. The remote kill line is to be installed prior to testing the system and tested to stack pressure.
4. If the operator has proposed a multi-bowl wellhead assembly in the APD. The following requirements must be met:

i. Wellhead shall be installed by manufacturer's representatives, submit documentation with subsequent sundry.
ii. If the welding is performed by a third party, the manufacturer's representative shall monitor the temperature to verify that it does not exceed the maximum temperature of the seal.
iii. Manufacturer representative shall install the test plug for the initial BOP test.
iv. Whenever any seal subject to test pressure is broken, all the tests in 43 CFR 3172.6(b)(9) must be followed.
v. If the cement does not circulate and one-inch operations would have been possible with a standard wellhead, the well head shall be cut off, cementing operations performed and another wellhead installed.

5. The appropriate BLM office shall be notified a minimum of 4 hours in advance for a representative to witness the tests.
i. In a water basin, for all casing strings utilizing slips, these are to be set as soon as the crew and rig are ready and any fallback cement remediation has been done. The casing cut-off and BOP installation can be initiated four hours after installing the slips, which will be approximately six hours after bumping the plug. For those casing strings not using slips, the minimum wait time before cut-off is eight hours after bumping the plug. BOP/BOPE testing can begin after cut-off or once cement reaches 500 psi compressive strength (including lead cement), whichever is greater. However, if the float does not hold, cut-off cannot be initiated until cement reaches 500 psi compressive strength (including lead when specified).
ii. In potash areas, for all casing strings utilizing slips, these are to be set as soon as the crew and rig are ready and any fallback cement remediation has been done. For all casing strings, casing cut-off and BOP installation can be initiated at twelve hours after bumping the cement plug. The BOPE test can be initiated after bumping the cement plug with the casing valve open. (Only applies to single stage cement jobs, prior to the cement setting up.)
iii. The tests shall be done by an independent service company utilizing a test plug not a cup or J-packer and can be initiated immediately with the casing valve open. The operator also has the option of utilizing an independent tester to test without a plug (i.e. against the casing) pursuant to **43 CFR 3172** with the pressure not to exceed 70% of the burst rating for the casing. Any test against the casing must meet the WOC time for 8 hours or 500 pounds compressive strength, whichever is greater, prior to initiating the test (see casing segment as lead cement may be critical item).
iv. The test shall be run on a 5000-psi chart for a 2-3M BOP/BOP, on a 10000 psi chart for a 5M BOP/BOPE and on a 15000 psi chart for a 10M

BOP/BOPE. If a linear chart is used, it shall be a one-hour chart. A circular chart shall have a maximum 2-hour clock. If a twelve hour or twenty-four-hour chart is used, tester shall make a notation that it is run with a two hour clock.

v. The results of the test shall be reported to the appropriate BLM office.

vi. All tests are required to be recorded on a calibrated test chart. A copy of the BOP/BOPE test chart and a copy of independent service company test will be submitted to the appropriate BLM office.

vii. The BOP/BOPE test shall include a low-pressure test from 250 to 300 psi. The test will be held for a minimum of 10 minutes if test is done with a test plug and 30 minutes without a test plug. This test shall be performed prior to the test at full stack pressure.

viii. BOP/BOPE must be tested by an independent service company within 500 feet of the top of the Wolfcamp formation if the time between the setting of the intermediate casing and reaching this depth exceeds 20 days. This test does not exclude the test prior to drilling out the casing shoe as per **43 CFR 3172**.

C. DRILLING MUD

Mud system monitoring equipment, with derrick floor indicators and visual and audio alarms, shall be operating before drilling into the Wolfcamp formation, and shall be used until production casing is run and cemented.

D. WASTE MATERIAL AND FLUIDS

All waste (i.e. drilling fluids, trash, salts, chemicals, sewage, gray water, etc.) created as a result of drilling operations and completion operations shall be safely contained and disposed of properly at a waste disposal facility. No waste material or fluid shall be disposed of on the well location or surrounding area. Porto-johns and trash containers will be on-location during fracturing operations or any other crew-intensive operations.

SA 10/26/2026

AFMSS
U.S. Department of the Interior
BUREAU OF LAND MANAGEMENT

Operator Certification Data Report

11/09/2026

Operator

I hereby certify that I, or someone under my direct supervision, have inspected the drill site and access route proposed herein; that I am familiar with the conditions which currently exist; that I have full knowledge of state and Federal laws applicable to this operation; that the statements made in this APD package are, to the best of my knowledge, true and correct; and that the work associated with the operations proposed herein will be performed in conformity with this APD package and the terms and conditions under which it is approved. I also certify that I, or the company I represent, am responsible for the operations conducted under this application. These statements are subject to the provisions of 18 U.S.C. 1001 for the filing of false statements.

NAME: MELONY LEAL **Signed on:** 09/02/2026

Title: Analyst

Street Address: 4801 BUSINESS PARK BLVD

City: HOBBS **State:** NM **Zip:** 88240

Phone: (575)393-5905

Email address: MLEAL@MEWBOURNE.COM

Field

Representative Name:

Street Address:

City: **State:** **Zip:**

Phone:

Email address:

AFMSS
U.S. Department of the Interior
BUREAU OF LAND MANAGEMENT

Application Data
11/09/2026

APD ID: 10400113693
Submission Date: 09/03/2026
Operator Name: MEWBOURNE OIL COMPANY
Well Name: COW BELL 9/4 FED COM
Well Number: 907H
Well Type: OIL WELL
Well Work Type: Drill

Highlighted data reflects the most recent changes
Show Final Text

Section 1 - General

APD ID: 10400113693
Tie to previous NOS? N
Submission Date: 09/03/2026
BLM Office: Carlsbad
User: MELONY LEAL
Title: Analyst
Federal/Indian APD: FED
Is the first lease penetrated for production Federal or Indian? FED
Lease number: NMNM10474
Lease Acres: 528
Surface access agreement in place?
Allotted?
Reservation:
Agreement in place? NO
Federal or Indian agreement:
Agreement number:
Agreement name:
Keep application confidential? Y
Permitting Agent? NO
APD Operator: MEWBOURNE OIL COMPANY
Operator letter of

Operator Info

Operator Organization Name: MEWBOURNE OIL COMPANY
Operator Address: P O BOX 5270
Zip: 88241
Operator PO Box:
Operator City: HOBBS
State: NM
Operator Phone: (575)393-5905
Operator Internet Address:

Section 2 - Well Information

Well in Master Development Plan? NO
Master Development Plan name:
Well in Master SUPO? NO
Master SUPO name:
Well in Master Drilling Plan? NO
Master Drilling Plan name:
Well Name: COW BELL 9/4 FED COM
Well Number: 907H
Field/Pool or Exploratory? Field and Pool
Field Name: WILDCAT CANYON
Pool Name: Bone Spring

Released to Imaging: 11/20/2026 2:01:41 PM

Operator Name: MEWBOURNE OIL COMPANY

Well Name: COW BELL 9/4 FED COM **Well Number:** 907H

Is the proposed well in an area containing other mineral resources? USEABLE WATER,NATURAL GAS,OIL

Is the proposed well in a Helium production area? N **Use Existing Well Pad?** N **New surface disturbance?**

Type of Well Pad: MULTIPLE WELL **Multiple Well Pad Name:** Cow Bell 9/4 Fed Com 315 407 905 907 **Number:** 4

Well Class: HORIZONTAL **Number of Legs:** 1

Well Work Type: Drill

Well Type: OIL WELL

Describe Well Type:

Well sub-Type: APPRAISAL

Describe sub-type:

Distance to town: 10 Miles **Distance to nearest well:** 20 FT **Distance to lease line:** 100 FT

Reservoir well spacing assigned acres Measurement: 325 Acres

Well plat: Cow_Bell_9_4_Fed_Com_907H_C102_20260825092114.pdf

Well work start Date: 10/11/2026 **Duration:** 60 DAYS

Section 3 - Well Location Table

Survey Type: RECTANGULAR

Describe Survey Type:

Datum: NAD83 **Vertical Datum:** NAVD88

Survey number: **Reference Datum:** KELLY BUSHING

Wellbore	NS-Foot	NS Indicator	EW-Foot	EW Indicator	Twsp	Range	Section	Aliquot/Lot/Tract	Latitude	Longitude	County	State	Meridian	Lease Type	Lease Number	Elevation	MD	TVD	Will this well produce from this
SHL Leg #1	260	FSL	1915	FEL	19S	34E	9	Aliquot SWSE	32.6682285	-103.5629251	LEA	NEW MEXICO	NEW MEXICO	F	NMNM 142575	3820			N
KOP Leg #1	473	FNL	450	FEL	19S	34E	16	Aliquot NENE	32.6662286	-103.5581624	LEA	NEW MEXICO	NEW MEXICO	S	STATE	-7575	11574	11395	N

Operator Name: MEWBOURNE OIL COMPANY

Well Name: COW BELL 9/4 FED COM **Well Number:** 907H

Wellbore	NS-Foot	NS Indicator	EW-Foot	EW Indicator	Twsp	Range	Section	Aliquot/Lot/Tract	Latitude	Longitude	County	State	Meridian	Lease Type	Lease Number	Elevation	MD	TVD	Will this well produce from this
PPP Leg #1-1	100	FSL	450	FEL	19S	34E	9	Aliquot SESE	32.6678032	-103.5581649	LEA	NEW MEXICO	NEW MEXICO	F	NMNM 10474	-8145	12474	11965	Y
PPP Leg #1-2	2639	FSL	447	FEL	19S	34E	9	Aliquot SENE	32.6747793	-103.5581643	LEA	NEW MEXICO	NEW MEXICO	F	NMNM 04591	-8118	15012	11938	Y
PPP Leg #1-3	1320	FNL	445	FEL	19S	34E	4	Aliquot NESE	32.6856588	-103.5581633	LEA	NEW MEXICO	NEW MEXICO	F	NMNM 9414	-8077	18970	11897	Y
EXIT Leg #1	100	FNL	450	FEL	19S	34E	4	Aliquot NENE	32.696665	-103.5581622	LEA	NEW MEXICO	NEW MEXICO	F	NMNM 10474	-8035	22975	11855	Y
BHL Leg #1	100	FNL	450	FEL	19S	34E	4	Aliquot NENE	32.696665	-103.5581622	LEA	NEW MEXICO	NEW MEXICO	F	NMNM 10474	-8035	22975	11855	Y

CONFIDENTIAL

C-102 Submit Electronically Via OCD Permitting	State of New Mexico Energy, Minerals & Natural Resources Department OIL CONSERVATION DIVISION	Revised July 9, 2024 Submittal Type: ■ Initial Submittal ☐ Amended Report ☐ As Drilled

WELL LOCATION INFORMATION

API Number	Pool Code	Pool Name
30-025-57117	~~PENDING~~ 98428	~~Wildcat Canyon~~ WC-025 G-08 S193409O;UPPER PENN

Property Code	Property Name	Well Number
336413	COW BELL 9/4 FED COM	907H

OGRID No.	Operator Name	Ground Level Elevation
14744	MEWBOURNE OIL COMPANY	3821'

Surface Owner: ☐ State ☐ Fee ☐ Tribal ☑ Federal
Mineral Owner: ☐ State ☑ Fee ☐ Tribal ☑ Federal

Surface Location

UL	Section	Township	Range	Lot	Ft. from N/S	Ft. from E/W	Latitude	Longitude	County
O	9	19S	34E		260 FSL	1915 FEL	32.6682285°N	103.5629251°W	LEA

Bottom Hole Location

UL	Section	Township	Range	Lot	Ft. from N/S	Ft. from E/W	Latitude	Longitude	County
A	4	19S	34E	1	100 FNL	450 FEL	32.6966650°N	103.5581623°W	LEA

Dedicated Acres	Infill or Defining Well	Defining Well API	Overlapping Spacing Unit (Y/N)	Consolidation Code
324.4	Defining		N	C

Order Numbers. N/A
Well setbacks are under Common Ownership: ☐ Yes ☑ No

Kick Off Point (KOP)

UL	Section	Township	Range	Lot	Ft. from N/S	Ft. from E/W	Latitude	Longitude	County
A	16	19S	34E		473 FNL	450 FEL	32.6662286°N	103.5581624°W	LEA

First Take Point (FTP)

UL	Section	Township	Range	Lot	Ft. from N/S	Ft. from E/W	Latitude	Longitude	County
P	9	19S	34E		100 FSL	450 FEL	32.6678032°N	103.5581649°W	LEA

Last Take Point (LTP)

UL	Section	Township	Range	Lot	Ft. from N/S	Ft. from E/W	Latitude	Longitude	County
A	4	19S	34E	1	100 FNL	450 FEL	32.6966650°N	103.5581623°W	LEA

Unitized Area or Area of Uniform Interest	Spacing Unit Type ☑ Horizontal ☐ Vertical	Ground Floor Elevation: 3849

OPERATOR CERTIFICATIONS

I hereby certify that the information contained herein is true and complete to the best of my knowledge and belief, and , if the well is a vertical or directional well, that this organization either owns a working interest or unleased mineral interest in the land including the proposed bottom hole location or has a right to drill this well at this location pursuant to a contract with an owner of a working interest or unleased mineral interest, or to a voluntary pooling agreement or a compulsory pooling order heretofore entered by the division.

If this well is a horizontal well, I further certify that this organization has received the consent of at least one lessee or owner of a working interest or unleased mineral interest in each tract (in the target pool or formation) in which any part of the well's completed interval will be located or obtained a compulsory pooling order from the division.

Ryan McDaniel 8/25/26

Signature Date

Ryan McDaniel

Printed Name

RyanMcDaniel@Mewbourne.com

Email Address

SURVEYOR CERTIFICATIONS

I hereby certify that the well location shown on this plat was plotted from field notes of actual surveys made by me under my supervision, and that the same is true and correct to the best of my belief.

ROBERT M. HOWETT NEW MEXICO 19680 PROFESSIONAL SURVEYOR

Signature and Seal of Professional Surveyor

Robert M. Howett

Certificate Number	Date of Survey
19680	07/29/2026

Note: No allowable will be assigned to this completion until all interests have been consolidated or a non-standard unit has been approved by the division.

ACREAGE DEDICATION PLATS

This grid represents a standard section. You may superimpose a non-standard section, or larger area, over this grid. Operators must outline the dedicated acreage in a red box, clearly show the well surface location and bottom hole location, if it is a directionally drilled, with the dimensions from the section lines in the cardinal directions. If this is a horizontal wellbore show on this plat the location of the First Take Point and Last Take Point, and the point within the Completed interval (other than the First Take Point or Last Take Point) that is closest to any outer boundary of the tract.

Surveyors shall use the latest United States government survey or dependent resurvey. Well locations will be in reference to the New Mexico Principal Meridian. If the land is not surveyed, contact the OCD Engineering Bureau. Independent subdivision surveys will not be acceptable.

COW BELL 9/4 FED COM #907H

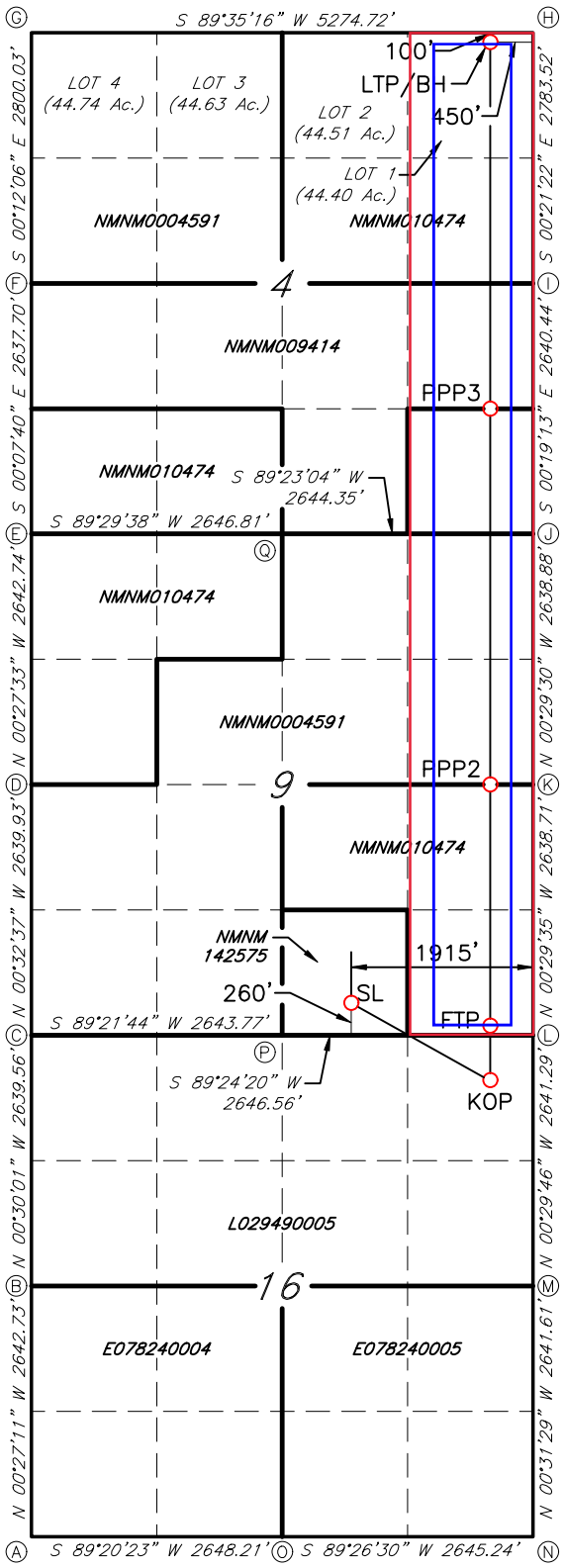

GEODETIC DATA
NAD 83 GRID – NM EAST

SURFACE LOCATION (SL)
260' FSL & 1915' FEL SEC.9
N: 607692.9 – E: 778409.6

LAT: 32.6682285° N
LONG: 103.5629251° W

KICK OFF POINT (KOP)
473' FNL & 450' FEL SEC.16
N: 606976.0 – E: 779880.6

LAT: 32.6662286° N
LONG: 103.5581624° W

FIRST TAKE POINT (FTP)
100' FSL & 450' FEL SEC.9
N: 607548.9 – E: 779875.6

LAT: 32.6678032° N
LONG: 103.5581649° W

PROPOSED PENETRATION POINT 2 (PPP2)
2639' FNL & 447' FEL SEC.9
N: 610086.9 – E: 779857.3

LAT: 32.6747793° N
LONG: 103.5581643° W

PROPOSED PENETRATION POINT 3 (PPP3)
1320' FSL & 445' FEL SEC.4
N: 614045.1 – E: 779828.6

LAT: 32.6856588° N
LONG: 103.5581633° W

LAST TAKE POINT/BOTTOM HOLE (LTP/BH)
100' FNL & 450' FEL SEC.4
N: 618049.4 – E: 779799.7

LAT: 32.6966650° N
LONG: 103.5581623° W

CORNER DATA
NAD 83 GRID – NM EAST

A: FOUND BRASS CAP "1912"
N: 602115.7 – E: 775081.3

B: FOUND BRASS CAP "1912"
N: 604757.8 – E: 775060.4

C: FOUND BRASS CAP "1912"
N: 607396.7 – E: 775037.4

D: FOUND 1/2" REBAR
N: 610036.0 – E: 775012.4

E: FOUND BRASS CAP "1912"
N: 612678.1 – E: 774991.2

F: FOUND BRASS CAP "1912"
N: 615315.3 – E: 774985.3

G: FOUND BRASS CAP "1912"
N: 618114.7 – E: 774975.4

H: FOUND BRASS CAP "1912"
N: 618152.7 – E: 780249.0

I: FOUND BRASS CAP "1912"
N: 615369.8 – E: 780266.3

J: FOUND BRASS CAP "1912"
N: 612729.9 – E: 780281.0

K: FOUND BRASS CAP "1912"
N: 610091.6 – E: 780303.6

L: FOUND BRASS CAP "1912"
N: 607453.6 – E: 780326.4

M: FOUND BRASS CAP "1912"
N: 604812.9 – E: 780349.2

N: FOUND BRASS CAP "1912"
N: 602171.9 – E: 780373.4

O: FOUND BRASS CAP "1912"
N: 602146.2 – E: 777728.8

P: FOUND 5/8" REBAR
N: 607426.1 – E: 777680.5

Q: FOUND BRASS CAP "1912"
N: 612701.5 – E: 777637.4

JOB #: LS26060445R1

AFMSS
U.S. Department of the Interior
BUREAU OF LAND MANAGEMENT

Drilling Plan Data Report
11/09/2026

APD ID: 10400113693
Submission Date: 09/03/2026
Operator Name: MEWBOURNE OIL COMPANY
Well Name: COW BELL 9/4 FED COM
Well Number: 907H
Well Type: OIL WELL
Well Work Type: Drill

Highlighted data reflects the most recent changes

Show Final Text

Section 1 - Geologic Formations

Formation ID	Formation Name	Elevation	True Vertical	Measured Depth	Lithologies	Mineral Resources	Producing Formatio
19206385	UNKNOWN	3821	28	28	OTHER : Topsoil	NONE	N
19206386	RUSTLER	2091	1730	1730	ANHYDRITE, DOLOMITE	USEABLE WATER	N
19206396	TOP SALT	1781	2040	2040	SALT	NONE	N
19206397	BASE OF SALT	621	3200	3200	SALT	NONE	N
19206399	YATES	451	3370	3370	SANDSTONE	NATURAL GAS, OIL	N
19206400	SEVEN RIVERS	-119	3940	3940	DOLOMITE	NATURAL GAS, OIL	N
19206409	GRAYBURG	-1509	5330	5330	DOLOMITE	NONE	N
19206406	LAMAR	-2039	5860	5860	LIMESTONE	NATURAL GAS, OIL	N
19206393	BRUSHY CANYON	-3959	7780	7780	SANDSTONE	NATURAL GAS, OIL	N
19206394	BONE SPRING	-4199	8020	8020	LIMESTONE, SHALE	NATURAL GAS, OIL	N
19206404	BONE SPRING 1ST	-5599	9420	9420	SANDSTONE	NATURAL GAS, OIL	N
19206384	BONE SPRING 2ND	-6079	9900	9900	SANDSTONE	NATURAL GAS, OIL	N
19206407	BONE SPRING 3RD	-6699	10520	10520	SANDSTONE	NATURAL GAS, OIL	N
19206408	WOLFCAMP	-6999	10820	10820	LIMESTONE, SANDSTONE, SHALE	NATURAL GAS, OIL	N
19206410	CANYON	-7924	11745	11745	LIMESTONE, SANDSTONE, SHALE	NATURAL GAS, OIL	Y

Section 2 - Blowout Prevention

Operator Name: MEWBOURNE OIL COMPANY

Well Name: COW BELL 9/4 FED COM **Well Number:** 907H

Pressure Rating (PSI): 10M **Rating Depth:** 22975

Equipment: Annular Pipe Rams Blind Rams Other accessories to the BOP equipment will include a Kelly cock and floor safety valve (inside BOP) and choke lines and choke manifold. See attached schematics.
Requesting Variance? YES

Variance request: A variance is requested for the use of a flexible choke line from the BOP to the choke manifold. See attached for hydrostatic test chart. Anchors are not required by manufacturer. Variance is requested to use a multi bowl wellhead. Variance is requested to perform break testing according to attached procedure. If a breaktesting variance is approved & incorporated, API Standard 53 will be incorporated and testing annular BOP to 70% of RWP or 100% of MASP, whichever is greater, will be performed.
Testing Procedure: BOP/BOPE will be tested by an independent service company to 250 psi low and the high pressure indicated above per 43 CFR Part 3172 requirements. The System may be upgraded to a higher pressure but still tested to the working pressure listed in the table above. If the system is upgraded all the components installed will be functional and tested. Pipe rams will be operationally checked each 24 hour period. Blind rams will be operationally checked on each trip out of the hole. These checks will be noted on the daily tour sheets.

Choke Diagram Attachment:

10M_BOPE_Choke_Diagram_20260813100619.pdf

Flex_Line_Specs_API_16C_20260813100627.pdf

BOP Diagram Attachment:

10M_BOPE_Schematic_20260813100640.pdf

10M_Annular_BOP_Variance_20260813100703.pdf

MOC__10K_WH_7.58__HP260095_20260924080421.pdf

Section 3 - Casing

Casing ID	String Type	Hole Size	Csg Size	Condition	Standard	Tapered String	Top Set MD	Bottom Set MD	Top Set TVD	Bottom Set TVD	Top Set MSL	Bottom Set MSL	Calculated casing length MD	Grade	Weight	Joint Type	Collapse SF	Burst SF	Joint SF Type	Joint SF	Body SF Type	Body SF
1	SURFACE	17.5	13.375	NEW	API	N	0	1815	0	1815	3820	2005	1815	J-55	54.5	ST&C	1.39	3.36	DRY	5.2	DRY	8.62
2	INTERMEDIATE	12.25	9.625	NEW	API	N	0	3500	0	3500	3822	320	3500	J-55	40	LT&C	1.39	2.13	DRY	3.71	DRY	4.5
3	PRODUCTION	8.75	7.625	NEW	API	N	0	12474	0	11965		-8145	12474	HCP-110	29.7	OTHER - GBCD	1.18	1.57	DRY	2.08	DRY	2.54
4	LINER	6.75	5.5	NEW	API	N	11574	22975	11392	11855	-7572	-8035	11401	OTHER - HPP 110	20	OTHER - Talon	1.55	1.77	DRY	2.4	DRY	2.81

Operator Name: MEWBOURNE OIL COMPANY

Well Name: COW BELL 9/4 FED COM **Well Number:** 907H

Casing Attachments

Casing ID: 1 **String** SURFACE

Inspection Document:

Spec Document:

Tapered String Spec:

Casing Design Assumptions and Worksheet(s):

13.375in_54.5__J55_STC_Csg_20260813100927.pdf

Casing ID: 2 **String** INTERMEDIATE

Inspection Document:

Spec Document:

Tapered String Spec:

Casing Design Assumptions and Worksheet(s):

9.625in_40__J55_LTC_Csg_20260811094736.pdf

Casing ID: 3 **String** PRODUCTION

Inspection Document:

Spec Document:

Tapered String Spec:

Casing Design Assumptions and Worksheet(s):

7.625in_29.7__HCP110_GBCD_Slim_Csg_20260825092642.pdf

CONFIDENTIAL

Operator Name: MEWBOURNE OIL COMPANY

Well Name: COW BELL 9/4 FED COM **Well Number:** 907H

Casing Attachments

Casing ID: 4 **String** LINER

Inspection Document:

Spec Document:

Tapered String Spec:

Casing Design Assumptions and Worksheet(s):

5.5in_20__HPP110_USS_Talon_HTQ_RD_20260825092745.pdf

Section 4 - Cement

String Type	Lead/Tail	Stage Tool Depth	Top MD	Bottom MD	Quantity(sx)	Yield	Density	Cu Ft	Excess%	Cement type	Additives
SURFACE	Lead		0	1623	1070	2.12	12.5	2270	100	Class C	Salt, Gel, Extender, LCM
SURFACE	Tail		1623	1815	200	1.34	14.8	268	100	Class C	Retarder
INTERMEDIATE	Lead		0	2874	580	2.12	12.5	1230	25	CALSS C	SALT GEL EXTENDER LCM
INTERMEDIATE	Tail		2874	3500	200	1.34	14.8	268	25	CLASS C	RETARDER
PRODUCTION	Lead	5860	3300	4833	90	2.12	12.5	200	25	Class C	Salt, Gel, Extender, LCM, Defoamer
PRODUCTION	Tail		4833	5860	100	1.34	14.8	134	25	Class C	Retarder FLUID LOSS DEFOAMER
PRODUCTION	Lead	5860	5860	10651	290	2.12	12.5	620	25	Class C	Salt, Gel, Extender, LCM, Defoamer
PRODUCTION	Tail		10651	12474	200	1.18	15.6	236	25	Class H	Retarder FLUID LOSS DEFOAMER
LINER	Lead		11574	22975	650	1.85	13.5	1210	25	CLASS H	SALT GEL FLUID LOSS RETARDER DISPERSANT ANTI SETTLING AGENT

Additional Cementing Information:

Operator Name: MEWBOURNE OIL COMPANY

Well Name: COW BELL 9/4 FED COM **Well Number:** 907H

Section 5 - Circulating Medium

Mud System Type: Closed

Will an air or gas system be Used? NO

Description of the equipment for the circulating system in accordance with 43 CFR 3172:

Diagram of the equipment for the circulating system in accordance with 43 CFR 3172:

Describe what will be on location to control well or mitigate other conditions: Formation integrity test will be performed per 43 CFR Part 3172. On Exploratory wells or on that portion of any well approved for a 5M BOPE system or greater, a pressure integrity test of each casing shoe shall be performed. Will be tested in accordance with 43 CFR Part 3172. A multibowl wellhead is being used. The BOP will be tested per 43 CFR Part 3170 after installation on the surface casing which will cover testing requirements for a maximum of 30 days. If any seal subject to test pressure is broken the system must be tested. Mewbourne Oil Company request a variance to use a 5000 psi annular BOP with a 10,000 psi BOP stack.

Describe the mud monitoring system utilized: Pason/PVT/Visual Monitoring

Circulating Medium Table

Top Depth	Bottom Depth	Mud Type	Min Weight (lbs/gal)	Max Weight (lbs/gal)	Density (lbs/cu ft)	Gel Strength (lbs/100 sqft)	PH	Viscosity (CP)	Salinity (ppm)	Filtration (cc)	Additional Characteristics
0	1815	SPUD MUD	8.4	8.6							
1815	3500	SALT SATURATED	10	10.2							
3500	12474	SALT SATURATED	8.6	9.7							
12474	22975	OIL-BASED MUD	10	11.5							

Operator Name: MEWBOURNE OIL COMPANY

Well Name: COW BELL 9/4 FED COM **Well Number:** 907H

Section 6 - Test, Logging, Coring

List of production tests including testing procedures, equipment and safety measures:

Will run GR/CNL from KOP (11569') to surface (horizontal well vertical portion of hole). Stated logs run will be in the Completion Report and submitted to the BLM

List of open and cased hole logs run in the well:

DIRECTIONAL SURVEY,MEASUREMENT WHILE DRILLING,MUD LOG/GEOLOGIC LITHOLOGY LOG,COMPENSATED NEUTRON LOG,GAMMA RAY LOG,

Coring operation description for the well:

None

Section 7 - Pressure

Anticipated Bottom Hole Pressure: 7155 **Anticipated Surface Pressure:** 4522

Anticipated Bottom Hole Temperature(F): 165

Anticipated abnormal pressures, temperatures, or potential geologic hazards? NO

Describe:

Contingency Plans geoharzards description:

Contingency Plans geohazards

Hydrogen Sulfide drilling operations plan required? YES

Hydrogen sulfide drilling operations

H2S_Plan_No_Structures_in_ROE_20260811095857.pdf

Section 8 - Other Information

Proposed horizontal/directional/multi-lateral plan submission:

Cow_Bell_9_4_Fed_Com_907H_MOC_Dir_Plot_20260825093053.pdf

Cow_Bell_9_4_Fed_Com_907H_MOC_Dir_Plan_20260825093053.pdf

Other proposed operations facets description:

Other proposed operations facets attachment:

NGMP_20260813103736.pdf

Cow_Bell_9_4_Fed_Com_907H_Drlg_Program_20260825093058.pdf

Other Variance request(s)?: Y

Other Variance attachment:

MOC_Break_Testing_Variance_20240621134011.pdf

MOC_Offline_Cementing_Variance_20240621134012.pdf

CONFIDENTIAL

CONFIDENTIAL

10M BOPE & Closed Loop Equipment Schematic

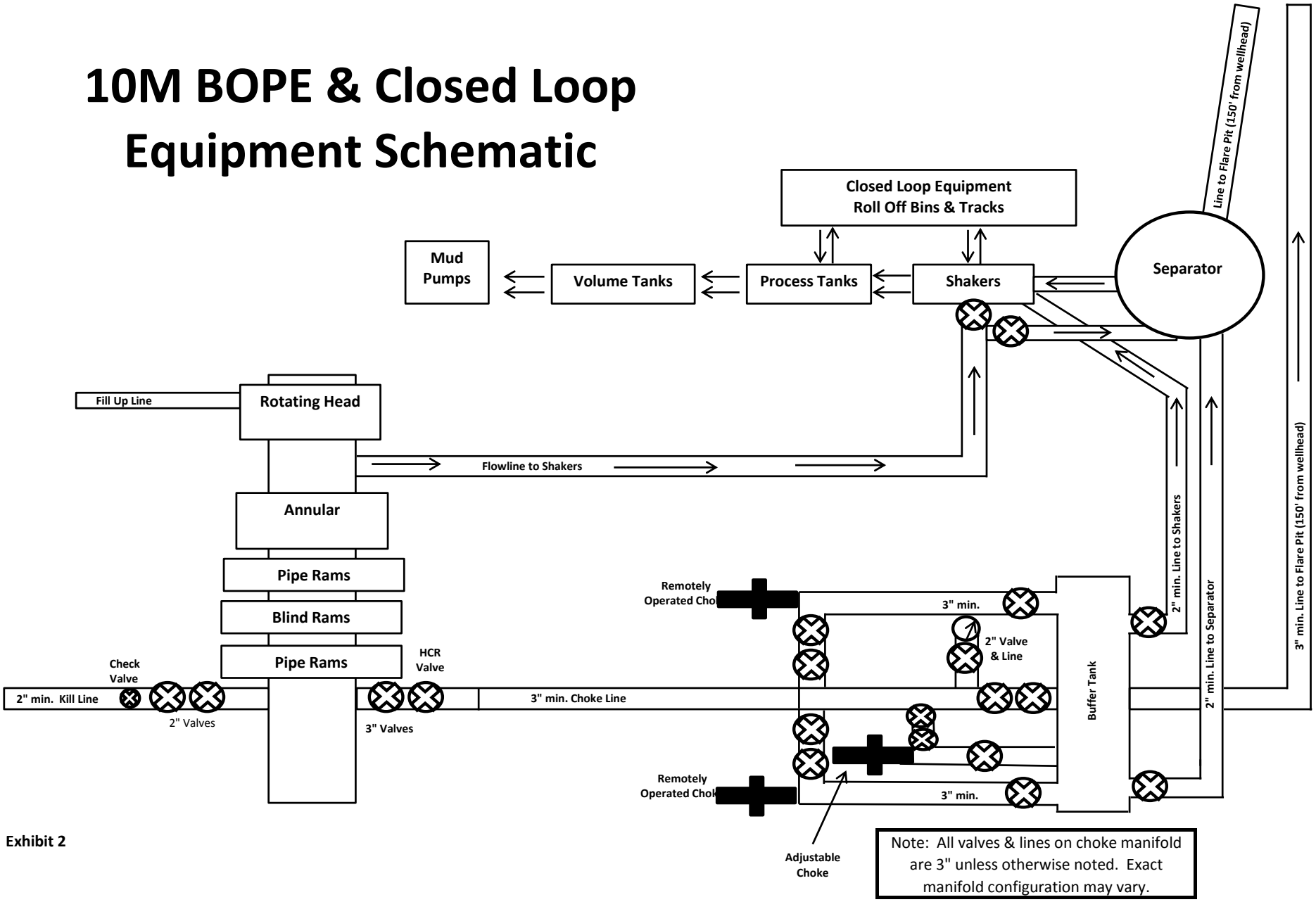

Exhibit 2

Note: All valves & lines on choke manifold are 3" unless otherwise noted. Exact manifold configuration may vary.

Page 51 of 133

LETONE

LUOHE LETONE HYDRAULICS TECHNOLOGY CO.,LTD

HYDROSTATIC TESTING REPORT

LTYY/QR-5.7.1-28 №: 230826015

Product Name	Choke And Kill Hose	Standard	API Spec 16C 3rd edition
Product Specification	3″×10000psi×60ft（18.29m）	Serial Number	7660144
Inspection Equipment	MTU-BS-1600-3200-E	Test medium	Water
Inspection Department	Q.C. Department	Inspection Date	2023.08.26
Rate of length change			
Standard requirements	At working pressure ,the rate of length change should not more than ±2%		
Testing result	10000psi (69.0MPa) ,Rate of length change 0.7%		
Hydrostatic testing			
Standard requirements	At 1.5 times working pressure, the initial pressure-holding period of not less than three minutes, the second pressure-holding period of not less than one hour, no leaks.		
Testing result	15000psi (103.5MPa), 3 min for the first time, 60 min for the second time, no leakage		

Graph of pressure testing:

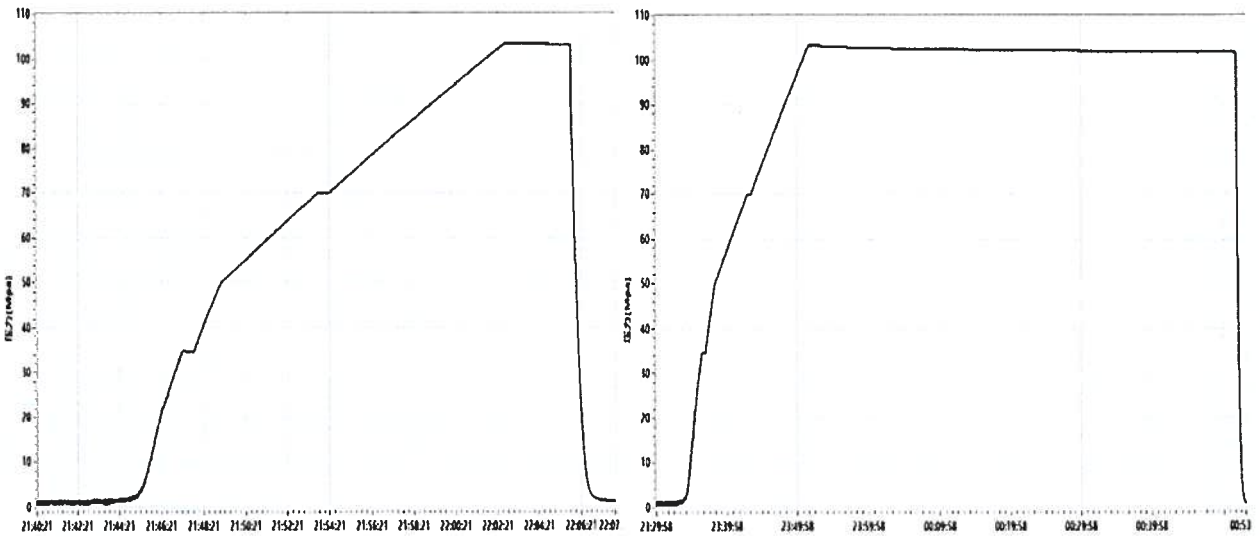

Conclusion	The inspected items meet standard requirements of API Spec 16C 3rd edition				
Approver	Jiaolong Chen	Auditor	Hliqing Dong	Inspector	Zhansheng Wang

Received by OCD: 11/9/2026 8:49:56 AM

Released to Imaging: 11/20/2026 2:01:41 PM

Page 52 of 133

LUOHE LETONE HYDRAULICS TECHNOLOGY CO.,LTD

CERTIFICATE OF QUALITY

LTYY/QR-5.7.1-19B №: LT2023-126-002

Customer Name	Austin Hose		
Product Name	Choke And Kill Hose		
Product Specification	3″×10000psi×60ft（18.29m）	Quantity	2PCS
Serial Number	7660143~7660144	FSL	FSL3
Temperature Range	-29℃～+121℃	Standard	API Spec 16C 3rd edition
Inspection Department	Q.C. Department	Inspection date	2023.08.26

Inspection Items	Inspection results
Appearance Checking	In accordance with API Spec 16C 3rd edition
Size and Lengths	In accordance with API Spec 16C 3rd edition
Dimensions and Tolerances	In accordance with API Spec 16C 3rd edition
End Connections: 4-1/16″×10000psi Integral flange for sour gas service	In accordance with API Spec 6A 21st edition
End Connections: 4-1/16″×10000psi Integral flange for sour gas service	In accordance with API Spec 17D 3rd edition
Hydrostatic Testing	In accordance with API Spec 16C 3rd edition
product Marking	In accordance with API Spec 16C 3rd edition
Inspection conclusion	The inspected items meet standard requirements of API Spec 16C 3rd edition
Remarks	

Approver	Jiaolong Chen	Auditor	Hliqing Dong	Inspector	Zhansheng Wang

Received by OCD: 11/9/2026 8:49:56 AM

Released to Imaging: 11/20/2026 2:01:41 PM

Page 53 of 133

LETONE

LUOHE LETONE HYDRAULICS TECHNOLOGY CO.,LTD

CERTIFICATE OF CONFORMANCE

№:LT230826016

Product Name：Choke And Kill Hose

Product Specification：3″×10000psi×60ft（18.29m）

Serial Number：7660143~7660144

End Connections: 4-1/16″×10000psi Integral flange for sour gas service

The Choke And Kill Hose assembly was produced by LUOHE LETONE HYDRAULICS TECHNOLOGY CO.,LTD . in Aug 2023, and inspected by LUOHE LETONE HYDRAULICS TECHNOLOGY CO.,LTD. according to API Spec 16C 3rd edition on Aug 26, 2023. The overall condition is good. This is to certify that the Choke And Kill Hose complies with all current standards and specifications for API Spec 16C 3rd edition .

QC Manager：Jiaolong Chen　　Date:Aug 26, 2023

Received by OCD: 11/9/2026 8:49:56 AM

Released to Imaging: 11/20/2026 2:01:41 PM

10M BOPE Schematic

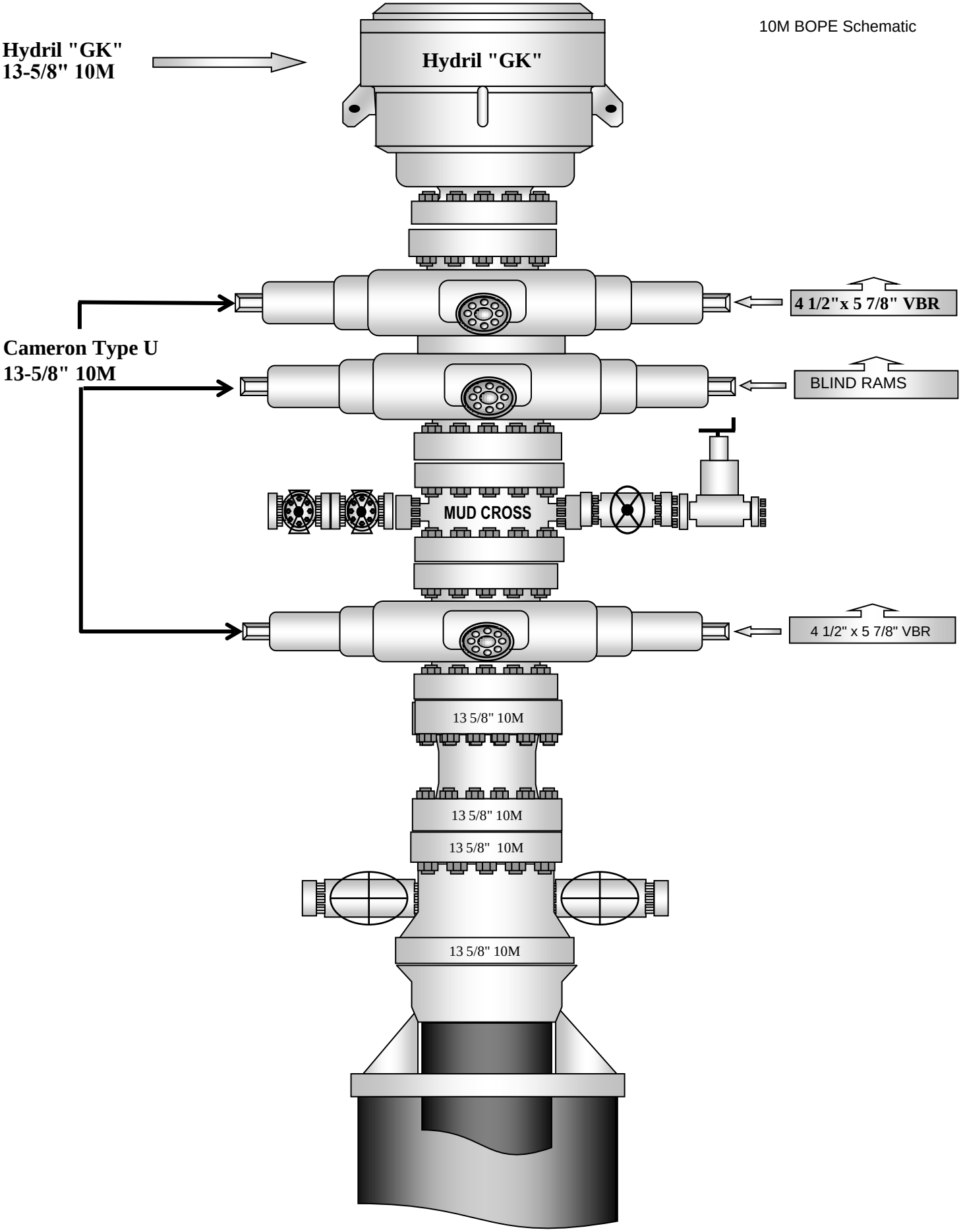

10,000 PSI Annular BOP Variance Request

Mewbourne Oil Company request a variance to use a 5000 psi annular BOP with a 10,000 psi BOP stack. The component and compatibility tables along with the general well control plans demonstrate how the 5000 psi annular BOP will be protected from pressures that exceed its rated working pressure (RWP). The pressure at which the control of the wellbore is transferred from the annular preventer to another available preventer will not exceed 3500 psi (70% of the RWP of the 5000 psi annular BOP).

1. Component and Preventer Compatibility Tables

The tables below outline the tubulars and the compatible preventers in use. This table, combined with the drilling fluid, documents that two barriers to flow will be maintained at all times.

12-1/4" Intermediate Hole Section 10M psi Requirement					
Component	**OD**	**Primary Preventer**	**RWP**	**Alternate Preventer(s)**	**RWP**
Drillpipe	5.000" or 4.500"	Annular	5M	Upper 3.5"-5.5" VBR Lower 3.5"-5.5" VBR	10M 10M
HWDP	5.000" or 4.500"	Annular	5M	Upper 3.5"-5.5" VBR Lower 3.5"-5.5" VBR	10M 10M
Jars	6.500"	Annular	5M	-	-
DCs and MWD tools	6.500"-8.000"	Annular	5M	-	-
Mud Motor	8.000"-9.625"	Annular	5M	-	-
Intermediate Casing	9.625"	Annular	5M	-	-
Open-Hole	-	Blind Rams	10M	-	-

8-3/4" Production Hole Section 10M psi Requirement					
Component	**OD**	**Primary Preventer**	**RWP**	**Alternate Preventer(s)**	**RWP**
Drillpipe	5.000" or 4.500"	Annular	5M	Upper 3.5"-5.5" VBR Lower 3.5"-5.5" VBR	10M 10M
HWDP	5.000" or 4.500"	Annular	5M	Upper 3.5"-5.5" VBR Lower 3.5"-5.5" VBR	10M 10M
Jars	6.500"	Annular	5M	-	-
DCs and MWD tools	6.500"-8.000"	Annular	5M	-	-
Mud Motor	6.750"-8.000"	Annular	5M	-	-
Production Casing	7"	Annular	5M	-	-
Open-Hole	-	Blind Rams	10M	-	-

6-1/8" Lateral Hole Section 10M psi Requirement					
Component	**OD**	**Primary Preventer**	**RWP**	**Alternate Preventer(s)**	**RWP**
Drillpipe	4.500"	Annular	5M	Upper 3.5"-5.5" VBR Lower 3.5"-5.5" VBR	10M 10M
HWDP	4.500"	Annular	5M	Upper 3.5"-5.5" VBR Lower 3.5"-5.5" VBR	10M 10M
DCs and MWD tools	4.750"-5.500"	Annular	5M	Upper 3.5"-5.5" VBR Lower 3.5"-5.5" VBR	10M 10M
Mud Motor	4.750"-5.500"	Annular	5M	Upper 3.5"-5.5" VBR Lower 3.5"-5.5" VBR	10M 10M
Production Casing	4.500"	Annular	5M	Upper 3.5"-5.5" VBR Upper 3.5"-5.5" VBR	10M 10M
Open-Hole	-	Blind Rams	10M	-	-

VBR = Variable Bore Ram

2. Well Control Procedures

Below are the minimal high-level tasks prescribed to assure a proper shut-in while drilling, tripping, running casing, pipe out of the hole (open hole), and moving the BHA through the BOPs. At least one well control drill will be performed weekly per crew to demonstrate compliance with the procedure and well control plan. The well control drill will be recorded in the daily drilling log. The type of drill will be determined by the ongoing operations, but reasonable attempts will be made to vary the type of drill conducted (pit, trip, open hole, choke, etc.). This well control plan will be available for review by rig personnel in the Mewbourne Oil Company drilling supervisor's office on location and on the rig floor. All BOP equipment will be tested as per Onshore O&G Order No. 2 with the exception of the 5000 psi annular which will be tested to 70% of its RWP.

General Procedure While Drilling

1. Sound alarm (alert crew)
2. Space out drill string
3. Shut down pumps (stop pumps and rotary)
4. Shut-in well (uppermost applicable BOP, typically annular preventer, first. HCR & choke will already be in the closed position.)
5. Confirm shut-in
6. Notify toolpusher/company representative
7. Read and record the following:
    a. SIDPP & SICP
    b. Pit gain
    c. Time
8. Regroup and identify forward plan

9. If pressure has built or is anticipated during the kill to reach 70% or greater of the RWP of the annular preventer, confirm spacing and close the upper variable bore rams.

General Procedure While Tripping

1. Sound alarm (alert crew)
2. Stab full-opening safety valve & close
3. Space out drill string
4. Shut-in well (uppermost applicable BOP, typically annular preventer, first. HCR & choke will already be in the closed position.)
5. Confirm shut-in
6. Notify toolpusher/company representative
7. Read and record the following:
    a. SIDPP & SICP
    b. Pit gain
    c. Time
8. Regroup and identify forward plan
9. If pressure has built or is anticipated during the kill to reach 70% of the RWP of the annular preventer, confirm spacing and close the upper variable bore rams.

General Procedure While Running Production Casing

1. Sound alarm (alert crew)
2. Stab crossover and full-opening safety valve and close
3. Space out string
4. Shut-in well (uppermost applicable BOP, typically annular preventer, first. HCR & choke will already be in the closed position.)
5. Confirm shut-in
6. Notify toolpusher/company representative
7. Read and record the following:
    a. SIDPP & SICP
    b. Pit gain
    c. Time
8. Regroup and identify forward plan
9. If pressure has built or is anticipated during the kill to reach 70% or greater of the RWP of the annular preventer, confirm spacing and close the upper variable bore rams.

General Procedure With No Pipe In Hole (Open Hole)

1. Sound alarm (alert crew)
2. Shut-in with blind rams (HCR & choke will already be in the closed position)
3. Confirm shut-in
4. Notify toolpusher/company representative
5. Read and record the following:
    a. SICP
    b. Pit gain
    c. Time
6. Regroup and identify forward plan

General Procedures While Pulling BHA Through Stack

1. PRIOR to pulling last joint of drillpipe through stack:
    a. Perform flow check. If flowing, continue to (b).
    b. Sound alarm (alert crew)
    c. Stab full-opening safety valve and close
    d. Space out drill string with tool joint just beneath the upper variable bore rams
    e. Shut-in using upper variable bore rams (HCR & choke will already be in the closed position)
    f. Confirm shut-in
    g. Notify toolpusher/company representative
    h. Read and record the following:
        i. SIDPP & SICP
        ii. Pit gain
        iii. Time
    i. Regroup and identify forward plan
2. With BHA in the stack and compatible ram preventer and pipe combination immediately available:
    a. Sound alarm (alert crew)
    b. Stab crossover and full-opening safety valve and close
    c. Space out drill string with upset just beneath the upper variable bore rams
    d. Shut-in using upper variable bore rams (HCR & choke will already be in the closed position)
    e. Confirm shut-in
    f. Notify toolpusher/company representative
    g. Read and record the following:
        i. SIDPP & SICP

ii. Pit gain
iii. Time

h. Regroup and identify forward plan

3. With BHA in the stack and NO compatible ram preventer and pipe combination immediately available:
   a. Sound alarm (alert crew)
   b. If possible, pull string clear of the stack and follow "Open Hole" procedure.
   c. If impossible to pull string clear of the stack:
   d. Stab crossover, make up one joint/stand of drillpipe and full-opening safety valve and close
   e. Space out drill string with tooljoint just beneath the upper variable bore ram
   f. Shut-in using upper variable bore ram (HCR & choke will already be in the closed position)
   g. Confirm shut-in
   h. Notify toolpusher/company representative
   i. Read and record the following:
      i. SIDPP & SICP
      ii. Pit gain
      iii. Time
   j. Regroup and identify forward plan

Page 60 of 133

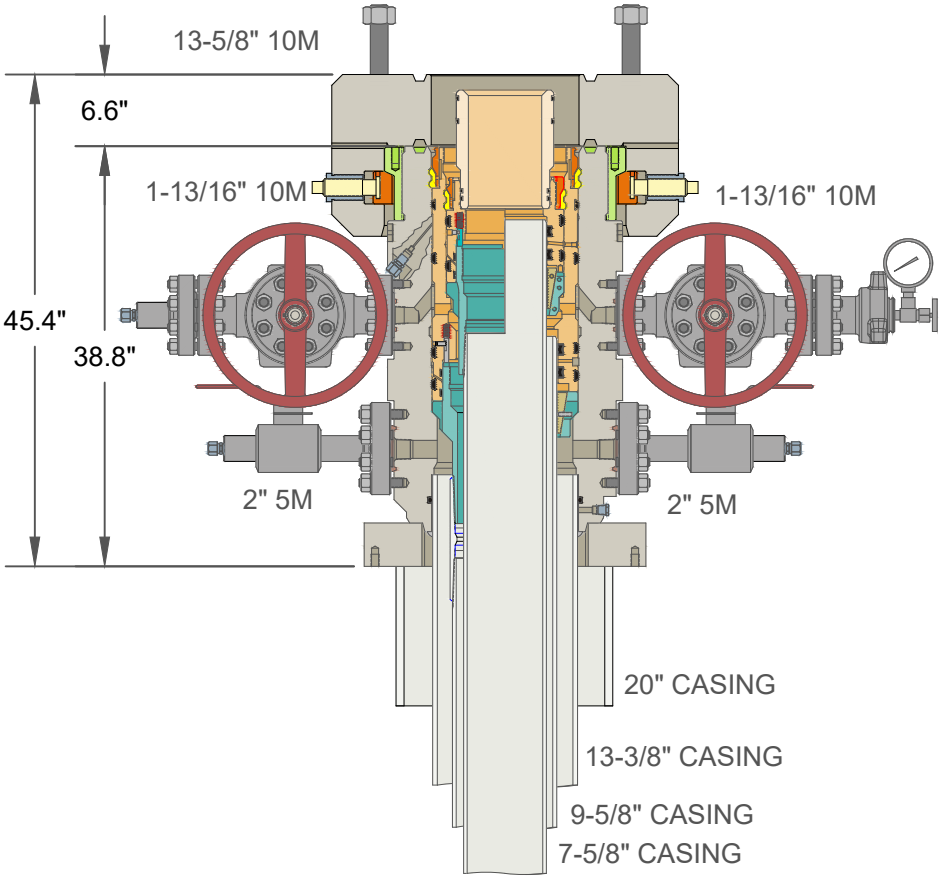

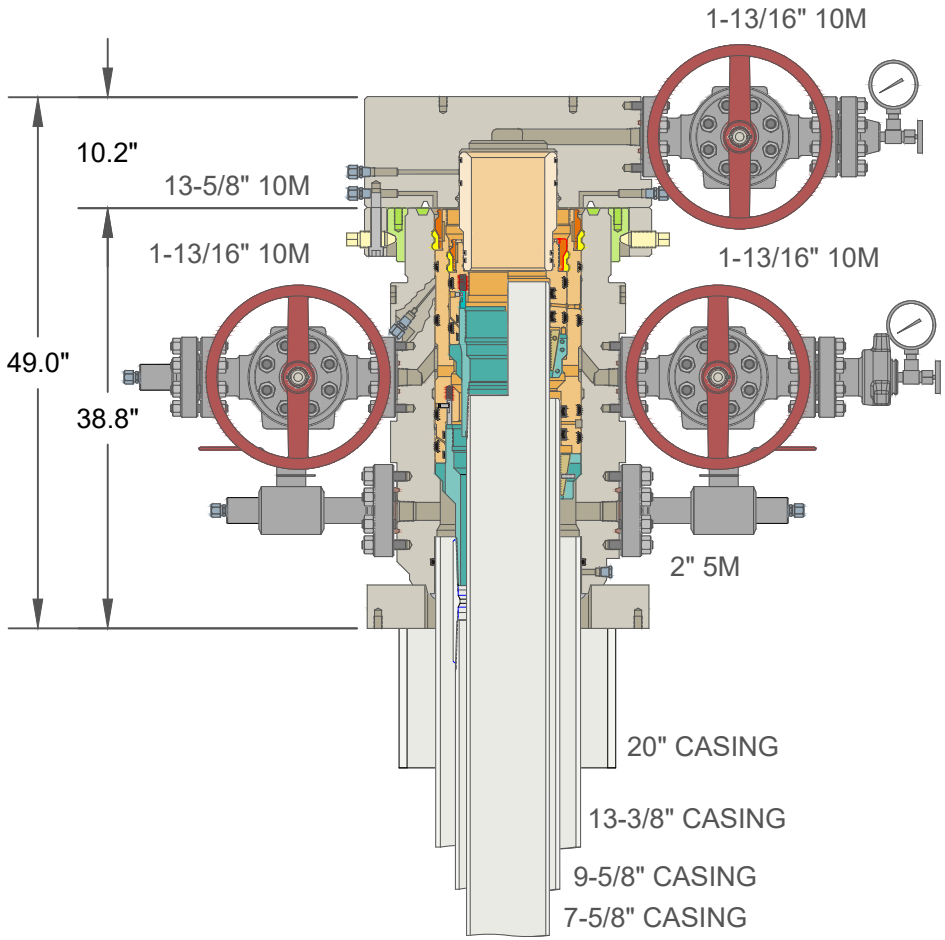

VAULT PRESSURE CONTROL

20" X 13-3/8" X 9-5/8" X 7-5/8" 10M RSH-2N WELLHEAD ASSEMBLY, WITH TA CAP AND DRILLING ADAPTER

COPYRIGHT & PROPRIETARY NOTICE
Copyright 2020 Vault Pressure Control, LLC (unpublished work). All rights reserved. The information contained in this document is company confidential and proprietary property of Vault Pressure Control and its affiliates. It is to be used only for the benefit of Vault Pressure Control and may not be distributed, transmitted, reproduced, altered or used for any purpose without the express written consent of Vault Pressure Control.

ALL DIMENSIONS ARE APPROXIMATE, NOT FOR MANUFACTURING USE.

DRAWN BY:	KN	DRAWING NO.	HP260095
REVIEWED BY:		Rev. NC	Sht. 1 of
APPROVED BY:		DATE:	9/23/2026

MEWBOURNE OIL COMPANY

Received by OCD: 11/9/2026 8:49:56 AM

Released to Imaging: 11/20/2026 2:01:41 PM

Tenaris

API LTC

Coupling	Pipe Body
Grade: **J55 (Casing)**	Grade: **J55 (Casing)**
Body: **Bright Green**	1st Band: **Bright Green**
1st Band: **White**	2nd Band: **-**
2nd Band: **-**	3rd Band: **-**
3rd Band: **-**	4th Band: **-**

Outside Diameter	9.625 in.	**Wall Thickness**	0.395 in.	**Grade**	J55 (Casing)
Min. Wall Thickness	87.50 %	**Pipe Body Drift**	API Standard	**Type**	Casing
Connection OD Option	Regular				

Pipe Body Data

Geometry				Performance	
Nominal OD	9.625 in.	**Drift**	8.679 in.	**SMYS**	55,000 psi
Wall Thickness	0.395 in.	**Plain End Weight**	38.97 lb/ft	**Min UTS**	75,000 psi
Nominal Weight	40 lb/ft	**OD Tolerance**	API	**Body Yield Strength**	630 x1000 lb
Nominal ID	8.835 in.			**Min. Internal Yield Pressure**	3950 psi
				Collapse Pressure	2570 psi
				Max. Allowed Bending	26 °/100 ft

Connection Data

Geometry		Performance		Make-Up Torques	
Thread per In	8	**Joint Strength**	520 x1000 lb	**Minimum Torque**	3900 ft-lb
Connection OD	10.625 in.	**Coupling Face Load**	433 x1000 lb	**Optimum Torque**	5200 ft-lb
Hand Tight Stand Off	3.500 in.	**Internal Pressure Capacity**	3950 psi	**Maximum Torque**	6500 ft-lb

Notes

For products according to API Standards 5CT & 5B; Performance calculated considering API Technical Report 5C3 (Sections 9 & 10) equations.
For geometrical and steel grades combinations not considered in the API Standards 5CT and/or 5B; Performance calculations indirectly derived from API Technical Report 5C3 (Sections 9 & 10) equations.
Couplings OD are shown according to current API 5CT 10th Edition.

Tenaris has issued this document for general information only, and the information in this document, including, without limitation, any pictures, drawings or designs ("Information") is not intended to constitute professional or any other type of advice or recommendation and is provided on an "as is" basis. No warranty is given. Tenaris has not independently verified any information –if any- provided by the user in connection with, or for the purpose of, the Information contained hereunder. The use of the Information is at user's own risk and Tenaris does not assume any responsibility or liability of any kind for any loss, damage or injury resulting from, or in connection with any Information contained hereunder or any use thereof. The Information in this document is subject to change or modification without notice. Tenaris's products and services are subject to Tenaris's standard terms and conditions or otherwise to the terms resulting from the respective contracts of sale or services, as the case may be, between petitioner and Tenaris. For more complete information please contact a Tenaris's representative or visit our website at www.tenaris.com . ©Tenaris 2024. All rights reserved.

tex-isle

Casing Performance Data Sheet
Manufactured to API 5CT
With GB CD Slim Connection

Grade	*P110 HC*
OD	*7.625”*
Nominal Wall Thickness	*0.375”*
Nominal Weight, T&C	*29.700 lb/ft*
Nominal Weight, PE	*29.060 lb/ft*
Nominal ID	*6.875”*
Standard Drift	*6.750”*

Performance Properties

Collapse Rating	*6,700 psi*
Internal Pressure Yield	*9,460 psi*
Pipe body Tension Yield	*940,000 lbs*

Connection Performance per GB

GB CD Slim Hole 7.900 COUPLING GEOMETRY			
Coupling OD (in.)	7.900	Makeup Loss (in.)	4.8125
Coupling Length (in.)	9.625	Critical Cross-Sect. (in.^{2})	6.721

GB CD Slim Hole 7.900 CONNECTION PERFORMANCE RATINGS/EFFICIENCIES						
Material Specification	API P-110	Min. Yield Str. (psi)		110,000	Min. Ultimate Str. (psi)	125,000
Tension		**Efficiency**			**Bending**	
			Gas	**Liquid*** **		
Tension OD Turn (kips)	776	Internal Pressure (%)	83%	100%	Build Rate to Yield (°/100 ft)	59.3
Thread Str. (kips)	794	External Pressure (%)	100%		**Yield Torque**	
Min. Tension Yield (kips)	702	Tension (%)	85%		Yield Torque (ft-lbs)	48,860
Min. Tension Ult. (kips)	798	Compression (%)	85%			
Joint Str. (kips)	794	Ratio of Areas (Cplg/Pipe)	0.79			
		Ratio of Areas (Cplg/OD Turn)	0.95			

MAKEUP TORQUE					
Min. MU Tq. (ft-lbs)	10,000	Max. MU Tq. (ft-lbs)	20,000	Running Tq. (ft-lbs)	See GBC RP
				Max. Operating Tq. (ft-lbs)*	46,410

Color Code

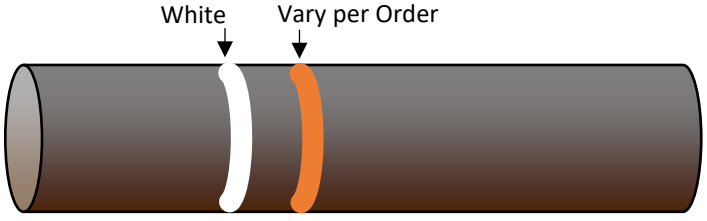

Released to Imaging: 11/20/2026 2:01:41 PM

U. S. Steel Tubular Products

8/10/2024 7:28:17 PM

5.500" 20.00lb/ft (0.361" Wall) P110 HP USS-TALON HTQ™ RD



MECHANICAL PROPERTIES	Pipe	USS-TALON HTQ™ RD		[6]
Minimum Yield Strength	125,000	--	psi	--
Maximum Yield Strength	140,000	--	psi	--
Minimum Tensile Strength	130,000	--	psi	--
DIMENSIONS	**Pipe**	**USS-TALON HTQ™ RD**		**--**
Outside Diameter	5.500	5.900	in.	--
Wall Thickness	0.361	--	in.	--
Inside Diameter	4.778	4.778	in.	--
Standard Drift	4.653	4.653	in.	--
Alternate Drift	--	--	in.	--
Nominal Linear Weight, T&C	20.00	--	lb/ft	--
Plain End Weight	19.83	--	lb/ft	--
SECTION AREA	**Pipe**	**USS-TALON HTQ™ RD**		**--**
Critical Area	5.828	5.828	sq. in.	--
Joint Efficiency	--	100.0	%	[2]
PERFORMANCE	**Pipe**	**USS-TALON HTQ™ RD**		**--**
Minimum Collapse Pressure	13,150	13,150	psi	--
Minimum Internal Yield Pressure	14,360	14,360	psi	--
Minimum Pipe Body Yield Strength	729,000	--	lb	--
Joint Strength	--	729,000	lb	--
Compression Rating	--	729,000	lb	--
Reference Length	--	24,300	ft	[5]
Maximum Uniaxial Bend Rating	--	104.2	deg/100 ft	[3]
MAKE-UP DATA	**Pipe**	**USS-TALON HTQ™ RD**		**--**
Make-Up Loss	--	5.58	in.	--
Minimum Make-Up Torque	--	18,400	ft-lb	[4]
Maximum Make-Up Torque	--	21,400	ft-lb	[4]
Maximum Operating Torque	--	44,400	ft-lb	[4]

UNCONTROLLED

Notes

1. Other than proprietary collapse and connection values, performance properties have been calculated using standard equations defined by API 5C3 and do not incorporate any additional design or safety factors. Calculations assume nominal pipe OD, nominal wall thickness, and Specified Minimum Yield Strength (SMYS).
2. Joint efficiencies are calculated by dividing the connection critical area by the pipe body area.
3. Uniaxial bend rating shown is structural only.
4. Torques have been calculated assuming a thread compound friction factor of 1.0 and are recommended only. Field make-up torques may require adjustment based on actual field conditions (e.g. make-up speed, temperature, thread compound, etc.).
5. Reference length is calculated by Joint Strength divided by Nominal Linear Weight, T&C with a 1.5 Safety factor.
6. Coupling must meet minimum mechanical properties of the pipe.

Legal Notice

All material contained in this publication is for general information only. This material should not therefore be used or relied upon for any specific application without independent competent professional examination and verification of accuracy, suitability and applicability. Anyone making use of this material does so at their own risk and assumes any and all liability resulting from such use. U. S. Steel disclaims any and all expressed or implied warranties of fitness for any general or particular application.

U. S. Steel Tubular Products
460 Wildwood Forest Drive, Suite 300S
Spring, Texas 77380

1-877-893-9461
connections@uss.com
www.usstubular.com

Tenaris

API STC

Coupling	Pipe Body
Grade: **J55 (Casing)**	Grade: **J55 (Casing)**
Body: **Bright Green**	1st Band: **Bright Green**
1st Band: **White**	2nd Band: **-**
2nd Band: **-**	3rd Band: **-**
3rd Band: **-**	4th Band: **-**

Outside Diameter	13.375 in.	**Wall Thickness**	0.380 in.	**Grade**	J55 (Casing)
Min. Wall Thickness	87.50 %	**Pipe Body Drift**	API Standard	**Type**	Casing
Connection OD Option	Regular				

Pipe Body Data

Geometry				Performance	
Nominal OD	13.375 in.	**Drift**	12.459 in.	**SMYS**	55,000 psi
Wall Thickness	0.380 in.	**Plain End Weight**	52.79 lb/ft	**Min UTS**	75,000 psi
Nominal Weight	54.500 lb/ft	**OD Tolerance**	API	**Body Yield Strength**	853 x1000 lb
Nominal ID	12.615 in.			**Min. Internal Yield Pressure**	2730 psi
				Collapse Pressure	1130 psi
				Max. Allowed Bending	19 °/100 ft

Connection Data

Geometry		Performance		Make-Up Torques	
Thread per In	8	**Joint Strength**	514 x1000 lb	**Minimum Torque**	3860 ft-lb
Connection OD	14.375 in.	**Coupling Face Load**	519 x1000 lb	**Optimum Torque**	5140 ft-lb
Hand Tight Stand Off	3.500 in.	**Internal Pressure Capacity**	2730 psi	**Maximum Torque**	6430 ft-lb

Notes

For products according to API Standards 5CT & 5B; Performance calculated considering API Technical Report 5C3 (Sections 9 & 10) equations.
For geometrical and steel grades combinations not considered in the API Standards 5CT and/or 5B; Performance calculations indirectly derived from API Technical Report 5C3 (Sections 9 & 10) equations.
Couplings OD are shown according to current API 5CT 10th Edition.

Tenaris has issued this document for general information only, and the information in this document, including, without limitation, any pictures, drawings or designs ("Information") is not intended to constitute professional or any other type of advice or recommendation and is provided on an "as is" basis. No warranty is given. Tenaris has not independently verified any information –if any- provided by the user in connection with, or for the purpose of, the Information contained hereunder. The use of the Information is at user's own risk and Tenaris does not assume any responsibility or liability of any kind for any loss, damage or injury resulting from, or in connection with any Information contained hereunder or any use thereof. The Information in this document is subject to change or modification without notice. Tenaris's products and services are subject to Tenaris's standard terms and conditions or otherwise to the terms resulting from the respective contracts of sale or services, as the case may be, between petitioner and Tenaris. For more complete information please contact a Tenaris's representative or visit our website at www.tenaris.com . ©Tenaris 2024. All rights reserved.

Hydrogen Sulfide Drilling Operations Plan
Mewbourne Oil Company

1. General Requirements

Rule 118 does not apply to this well because MOC has researched this area and no high concentrations of H2S were found. MOC will have on location and working all H2S safety equipment before the Delaware formation for purposes of safety and insurance requirements.

2. Hydrogen Sulfide Training

All personnel, whether regularly assigned, contracted, or employed on an unscheduled basis, will have received training from a qualified instructor in the following areas prior to entering the drilling pad area of the well:

1. The hazards and characteristics of hydrogen sulfide gas.
2. The proper use of personal protective equipment and life support systems.
3. The proper use of hydrogen sulfide detectors, alarms, warning systems, briefing areas, evacuation procedures.
4. The proper techniques for first aid and rescue operations.

Additionally, supervisory personnel will be trained in the following areas:

1 The effects of hydrogen sulfide on metal components. If high tensile tubular systems are utilized, supervisory personnel will be trained in their special maintenance requirements.
2 Corrective action and shut in procedures, blowout prevention, and well control procedures while drilling a well.
3 The contents of the Hydrogen Sulfide Drilling Operations Plan.

There will be an initial training session prior to encountering a know hydrogen sulfide source. The initial training session shall include a review of the site specific Hydrogen Sulfide Drilling Operations Plan.

3. Hydrogen Sulfide Safety Equipment and Systems

All hydrogen sulfide safety equipment and systems will be installed, tested, and operational prior to drilling below the surface casing shoe.

1. Well Control Equipment
   - A. Choke manifold with minimum of one adjustable choke/remote choke.
   - B. Blowout preventers equipped with blind rams and pipe rams to accommodate all pipe sizes with properly sized closing unit
   - C. Auxiliary equipment including annular type blowout preventer.
2. Protective Equipment for Essential Personnel
   Thirty minute self contained work unit located in the dog house and at briefing areas.

Additionally: If H2S is encountered in concentrations less than 10 ppm, fans will be placed in work areas to prevent the accumulation of hazardous amounts of poisonous gas. If higher concentrations of H2S are detected the well will be shut in and a rotating head, mud/gas separator, remote choke and flare line with igniter will be installed.

3. Hydrogen Sulfide Protection and Monitoring Equipment
Two portable hydrogen sulfide monitors positioned on location for optimum coverage and detection. The units shall have audible sirens to notify personnel when hydrogen sulfide levels exceed 20 PPM.

4. Visual Warning Systems
A. Wind direction indicators as indicated on the wellsite diagram.
B. Caution signs shall be posted on roads providing access to location. Signs shall be painted a high visibility color with lettering of sufficient size to be readable at reasonable distances from potentially contaminated areas.

4. Mud Program

The mud program has been designed to minimize the amount of hydrogen sulfide entrained in the mud system. Proper mud weight, safe drilling practices, and the use of hydrogen sulfide scavengers will minimize hazards while drilling the well.

5. Metallurgy

All tubular systems, wellheads, blowout preventers, drilling spools, kill lines, choke manifolds, and valves shall be suitable for service in a hydrogen sulfide environment when chemically treated.

6. Communications

State & County Officials phone numbers are posted on rig floor and supervisors trailer. Communications in company vehicles and toolpushers are either two way radios or cellular phones.

7. Escape

Assumed 100 ppm ROE = 3000' (Radius of Exposure) 100 ppm H2S concentration shall trigger activation of this plan.

Escape Crews shall escape upwind of escaping gas in the event of an emergency release of gas. Escape can be facilitated from the location entrance road. Crews should then block the entrance to the location from the lease road so as not to allow anyone traversing into a hazardous area. The blockade should be at a safe distance outside of the ROE. **There are no homes or buildings in the ROE**. Assumed 100 ppm ROE = 3000'

8. Well Testing

Drill stem testing is not an anticipated requirement for evaluation of this well. If a drill stem test is required, it will be conducted with a minimum number of personnel in the immediate vicinity. The test will be conducted during daylight hours only.

9. Emergency Phone Numbers

Eddy County Sheriff's Office	**911 or 575-887-7551**
Ambulance Service	**911 or 575-885-2111**
Carlsbad Fire Dept	**911 or 575-885-2111**
Loco Hills Volunteer Fire Dept.	**911 or 575-677-3266**
Closest Medical Facility - Columbia Medical Center of Carlsbad	**575-492-5000**

Mewbourne Oil Company	**Hobbs District Office**	**575-393-5905**
	Fax	**575-397-6252**

	2nd Fax	**575-393-7259**
District Manager	**Robin Terrell**	**575-390-4816**
Drilling Superintendent	**Frosty Lathan**	**575-390-4103**
	Bradley Bishop	**575-390-6838**
Drilling Foreman	**Wesley Noseff**	**575-441-0729**

DRILLING RIG LOCATION EQUIPMENT PLAT - H2S CONTINGENCY OVERLAY (BLM 43 CFR 3176) - REV 3

NOT TO SCALE | TYPICAL PAD DIMENSIONS APPROX. 400' x 350' | DATE: 06-12-2026

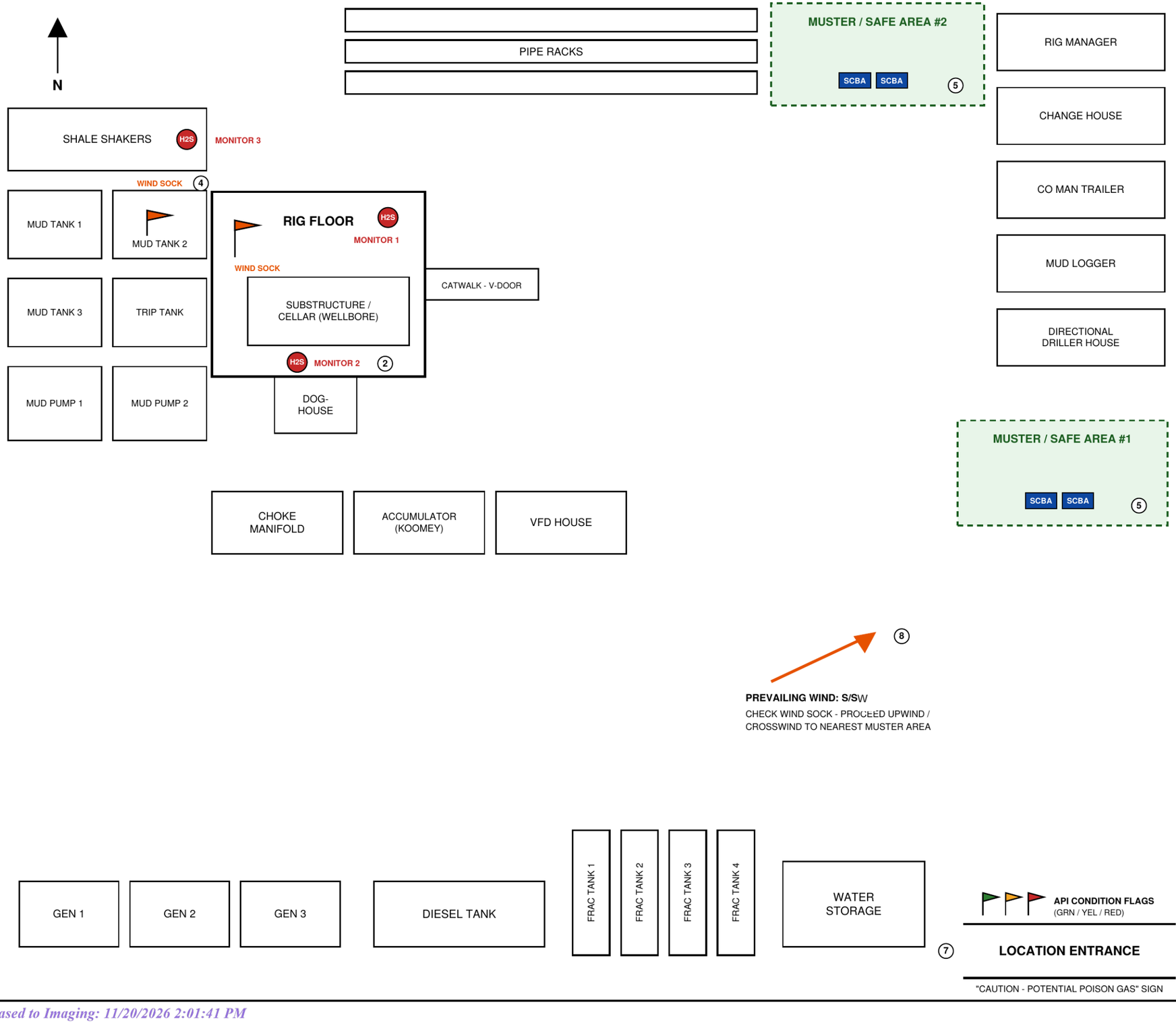

LEGEND - H2S OVERLAY SYMBOLS

- H2S — FIXED H2S MONITOR - NUMBERED: 1 = RIG FLOOR 2 = SUBSTRUCTURE 3 = SHAKERS
- WIND SOCK (2 TOTAL - RIG FLOOR / ON MUD PITS)
- MUSTER / SAFE BRIEFING AREA (2 TOTAL)
- SCBA — SCBA UNIT - 2 PER MUSTER AREA (4 TOTAL)
- API CONDITION FLAG STATION (GRN / YEL / RED)
- (0) KEYED NOTE - SEE 43 CFR 3179 NOTES BELOW

43 CFR 3176 COMPLIANCE NOTES

(1) MONITOR 1 - RIG FLOOR: breathing-zone sensor covering the rotary and flowline area where the crew works (43 CFR 3179.201 / API RP 49 coverage).

(2) MONITOR 2 - SUBSTRUCTURE / CELLAR: fixed sensor in the cellar, directly beneath the rotary. This is the FIRST point where gas entrained in returning mud breaks out of the wellbore, and the LOWEST confined space on location. H2S is heavier than air (vapor density approx. 1.19) and settles and concentrates here, so this sensor gives the earliest possible warning of a kick or gassy returns. Continuous monitoring while circulating; audible + visual alarm at 10 ppm per the site H2S contingency plan.

(3) MONITOR 3 - SHALE SHAKERS: gas is liberated as returning mud crosses the shaker screens; sensor covers shaker hands working the pits (43 CFR 3179.201 / API RP 49).

(4) WIND SOCKS: one ELEVATED on the rig floor and one mounted directly ON the mud pits, so wind direction is visible from every work area at all times (43 CFR 3179.201(b) wind direction equipment).

(5) MUSTER / SAFE AREAS: two briefing areas on opposite sides (#1 at the Co Man / trailer row, #2 at the pipe racks) so at least one is always upwind or crosswind of the wellbore.

(6) SCBA: two self-contained breathing apparatus units staged at each muster area (4 total) per 43 CFR 3179.201(d) protective breathing equipment.

(7) LOCATION ENTRANCE: single controlled entrance at the southeast corner of the pad (noted on plat). API CONDITION FLAGS displayed AT THE ENTRANCE with caution signage: GREEN = normal, YELLOW = potential H2S, RED = H2S present, danger - do not enter (43 CFR 3179.201 / API RP 49 warning system).

(8) WIND READING: verify wind direction via wind socks before and during operations; on alarm, move upwind/crosswind to the nearest muster area and account for all personnel before re-entry.

REFERENCE: 43 CFR PART 3179 (BLM) AND API RP 49.
ALL ORIGINAL EQUIPMENT SHOWN; H2S OVERLAY ITEMS IN COLOR ONLY.

VICINITY MAP

NOT TO SCALE

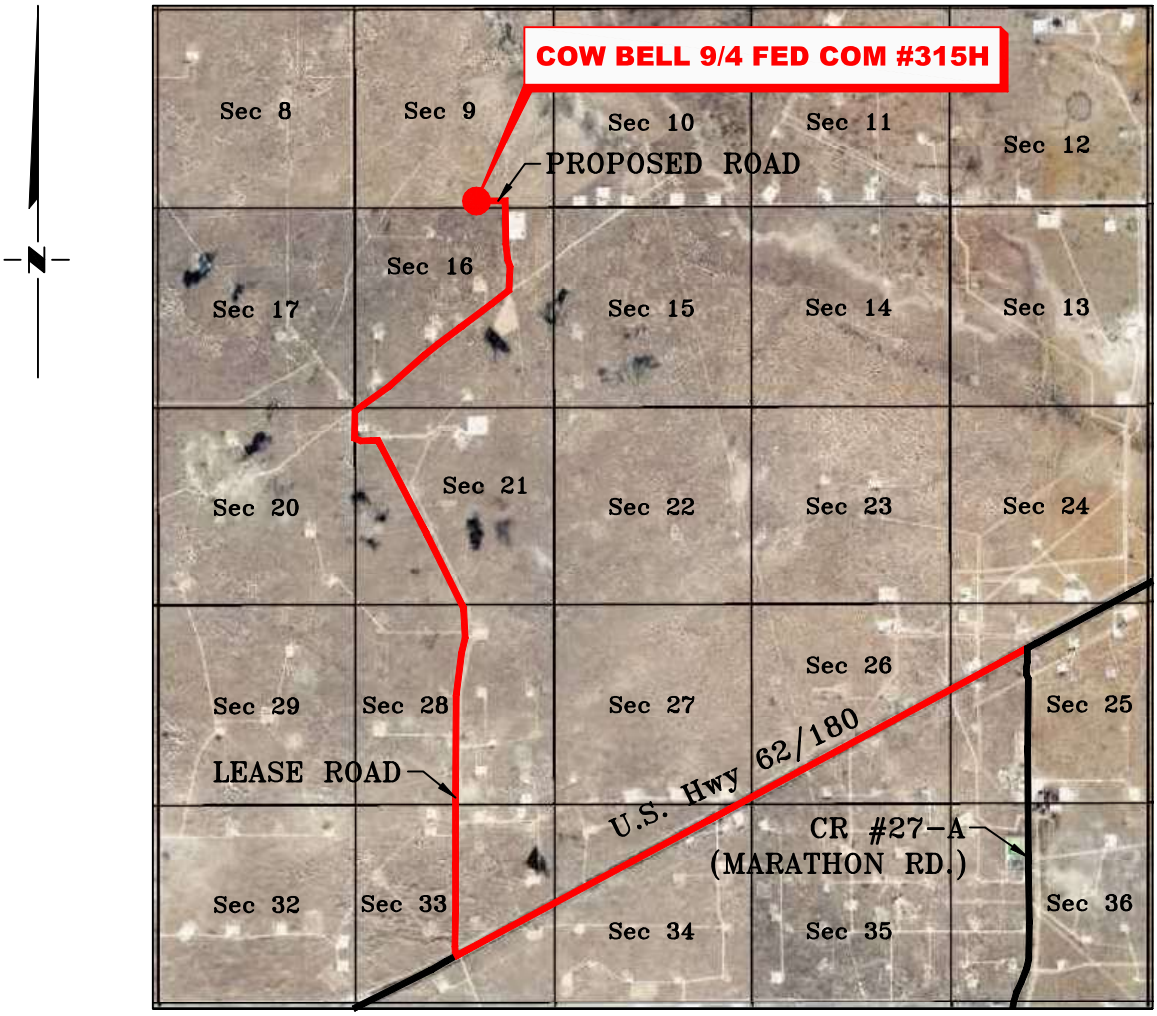

SECTION 9, TWP. 19 SOUTH, RGE. 34 EAST,
N. M. P. M., LEA CO., NEW MEXICO

OPERATOR: Mewbourne Oil Company
LEASE: Cow Bell 9/4 Fed Com
WELL NO.: 315H

LOCATION: 210' FSL & 1955' FEL
ELEVATION: 3822'

NO.	REVISION	DATE

JOB NO.: LS26060443
DWG. NO.: 26060443-4

RRC ENERGY SERVICES, LLC.
701 S. CECIL ST., HOBBS, NM 88240 (575) 964-8200

SCALE: N. T. S.
DATE: 06/04/2026
SURVEYED BY: ML/AR/ZL
DRAWN BY: AR
APPROVED BY: RMH
SHEET: 1 OF 1

Copyright 2016 – All Rights Reserved

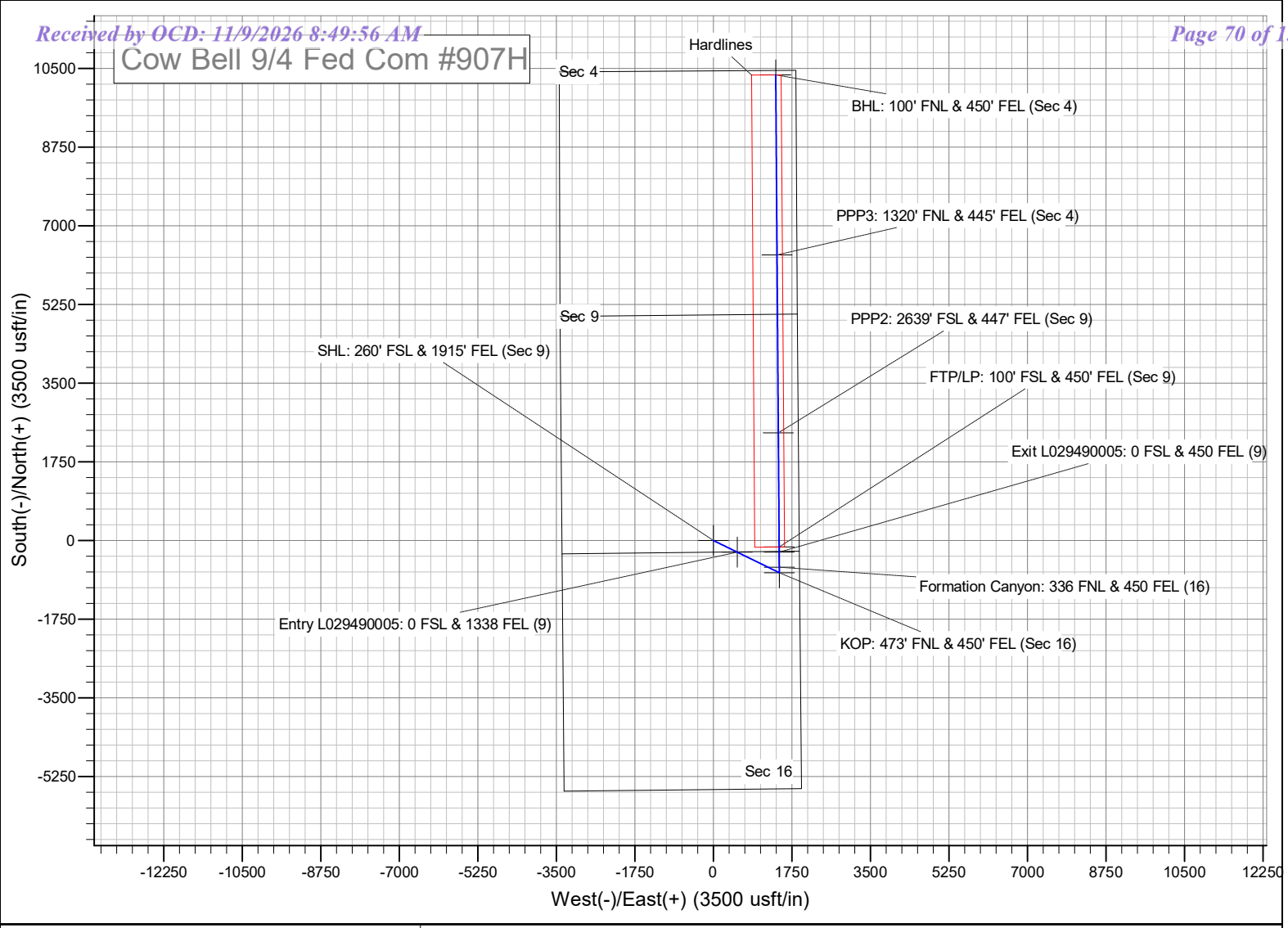
Cow Bell 9/4 Fed Com #907H
Hardlines
Sec 4
BHL: 100' FNL & 450' FEL (Sec 4)
PPP3: 1320' FNL & 445' FEL (Sec 4)
Sec 9
PPP2: 2639' FSL & 447' FEL (Sec 9)
SHL: 260' FSL & 1915' FEL (Sec 9)
FTP/LP: 100' FSL & 450' FEL (Sec 9)
Exit L029490005: 0 FSL & 450 FEL (9)
Formation Canyon: 336 FNL & 450 FEL (16)
Entry L029490005: 0 FSL & 1338 FEL (9)
KOP: 473' FNL & 450' FEL (Sec 16)
Sec 16
South(-)/North(+) (3500 usft/in)
West(-)/East(+) (3500 usft/in)

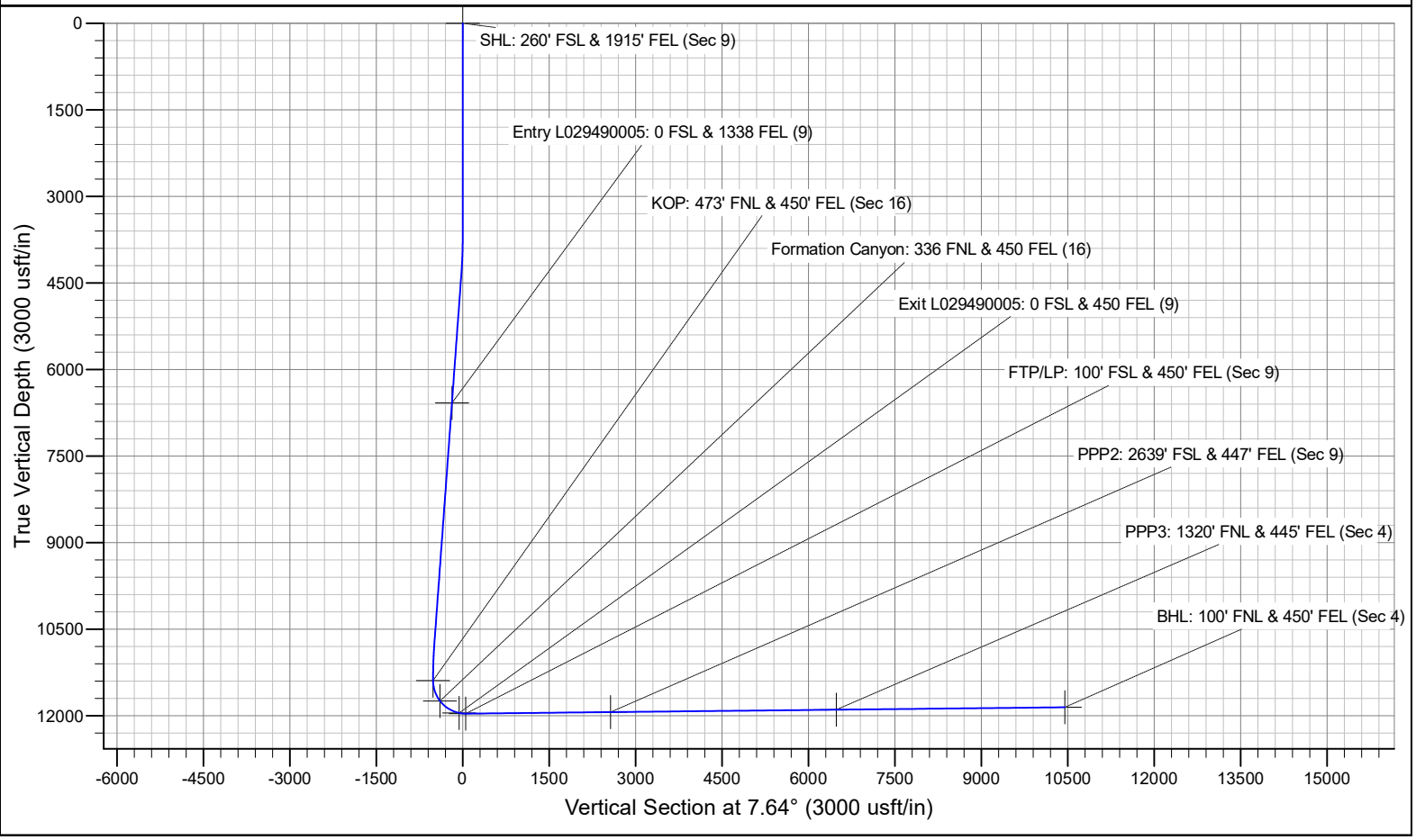
SHL: 260' FSL & 1915' FEL (Sec 9)
Entry L029490005: 0 FSL & 1338 FEL (9)
KOP: 473' FNL & 450' FEL (Sec 16)
Formation Canyon: 336 FNL & 450 FEL (16)
Exit L029490005: 0 FSL & 450 FEL (9)
FTP/LP: 100' FSL & 450' FEL (Sec 9)
PPP2: 2639' FSL & 447' FEL (Sec 9)
PPP3: 1320' FNL & 445' FEL (Sec 4)
BHL: 100' FNL & 450' FEL (Sec 4)
True Vertical Depth (3000 usft/in)
Vertical Section at 7.64° (3000 usft/in)

Mewbourne Oil Company

Lea County, New Mexico NAD 83
Cow Bell 9/4 Fed Com #907H
Sec 09, T19S, R34E
SHL: 260' FSL & 1915' FEL (Sec 9)
BHL: 100' FNL & 450' FEL (Sec 4)

Plan: Design #1

Standard Planning Report

25 August, 2026

Planning Report

Database:	Hobbs	**Local Co-ordinate Reference:**	Site Cow Bell 9/4 Fed Com #907H
Company:	Mewbourne Oil Company	**TVD Reference:**	WELL @ 3848.0usft (Original Well Elev)
Project:	Lea County, New Mexico NAD 83	**MD Reference:**	WELL @ 3848.0usft (Original Well Elev)
Site:	Cow Bell 9/4 Fed Com #907H	**North Reference:**	Grid
Well:	Sec 09, T19S, R34E	**Survey Calculation Method:**	Minimum Curvature
Wellbore:	BHL: 100' FNL & 450' FEL (Sec 4)		
Design:	Design #1		

Project Lea County, New Mexico NAD 83

Map System:	US State Plane 1983	**System Datum:**	Mean Sea Level
Geo Datum:	North American Datum 1983		
Map Zone:	New Mexico Eastern Zone		

Site Cow Bell 9/4 Fed Com #907H

Site Position:		**Northing:**	607,692.90 usft	**Latitude:**	32.6682284
From:	Map	**Easting:**	778,409.60 usft	**Longitude:**	-103.5629251
Position Uncertainty:	0.0 usft	**Slot Radius:**	13-3/16 "		

Well Sec 09, T19S, R34E

Well Position	**+N/-S**	0.0 usft	**Northing:**	607,692.90 usft	**Latitude:**	32.6682284
	+E/-W	0.0 usft	**Easting:**	778,409.60 usft	**Longitude:**	-103.5629251
Position Uncertainty		0.0 usft	**Wellhead Elevation:**	3,848.0 usft	**Ground Level:**	3,820.0 usft
Grid Convergence:		0.42 °				

Wellbore BHL: 100' FNL & 450' FEL (Sec 4)

Magnetics	Model Name	Sample Date	Declination (°)	Dip Angle (°)	Field Strength (nT)
	IGRF2010	12/31/2014	7.18	60.51	48,526.44776170

Design Design #1

Audit Notes:

Version:	**Phase:**	PROTOTYPE	**Tie On Depth:**	0.0

Vertical Section:	Depth From (TVD) (usft)	+N/-S (usft)	+E/-W (usft)	Direction (°)
	0.0	0.0	0.0	7.64

Plan Survey Tool Program **Date** 8/25/2026

	Depth From (usft)	Depth To (usft)	Survey (Wellbore)	Tool Name	Remarks
1	0.0	22,975.5	Design #1 (BHL: 100' FNL & 450'		

Plan Sections

Measured Depth (usft)	Inclination (°)	Azimuth (°)	Vertical Depth (usft)	+N/-S (usft)	+E/-W (usft)	Dogleg Rate (°/100usft)	Build Rate (°/100usft)	Turn Rate (°/100usft)	TFO (°)	Target
0.0	0.00	0.00	0.0	0.0	0.0	0.00	0.00	0.00	0.00	
3,700.0	0.00	0.00	3,700.0	0.0	0.0	0.00	0.00	0.00	0.00	
4,354.8	13.10	115.98	4,349.1	-32.6	67.0	2.00	2.00	0.00	115.98	
10,919.3	13.10	115.98	10,742.9	-684.3	1,404.0	0.00	0.00	0.00	0.00	
11,574.1	0.00	0.01	11,392.0	-716.9	1,471.0	2.00	-2.00	0.00	180.00	KOP: 473' FNL & 450
12,480.2	90.60	359.58	11,965.0	-137.9	1,466.8	10.00	10.00	0.00	-0.42	
22,975.5	90.60	359.58	11,855.0	10,356.5	1,390.1	0.00	0.00	0.00	0.00	BHL: 100' FNL & 450'

Planning Report

Database:	Hobbs	**Local Co-ordinate Reference:**	Site Cow Bell 9/4 Fed Com #907H
Company:	Mewbourne Oil Company	**TVD Reference:**	WELL @ 3848.0usft (Original Well Elev)
Project:	Lea County, New Mexico NAD 83	**MD Reference:**	WELL @ 3848.0usft (Original Well Elev)
Site:	Cow Bell 9/4 Fed Com #907H	**North Reference:**	Grid
Well:	Sec 09, T19S, R34E	**Survey Calculation Method:**	Minimum Curvature
Wellbore:	BHL: 100' FNL & 450' FEL (Sec 4)		
Design:	Design #1		

Planned Survey

Measured Depth (usft)	Inclination (°)	Azimuth (°)	Vertical Depth (usft)	+N/-S (usft)	+E/-W (usft)	Vertical Section (usft)	Dogleg Rate (°/100usft)	Build Rate (°/100usft)	Turn Rate (°/100usft)
0.0	0.00	0.00	0.0	0.0	0.0	0.0	0.00	0.00	0.00
SHL: 260' FSL & 1915' FEL (Sec 9)									
100.0	0.00	0.00	100.0	0.0	0.0	0.0	0.00	0.00	0.00
200.0	0.00	0.00	200.0	0.0	0.0	0.0	0.00	0.00	0.00
300.0	0.00	0.00	300.0	0.0	0.0	0.0	0.00	0.00	0.00
400.0	0.00	0.00	400.0	0.0	0.0	0.0	0.00	0.00	0.00
500.0	0.00	0.00	500.0	0.0	0.0	0.0	0.00	0.00	0.00
600.0	0.00	0.00	600.0	0.0	0.0	0.0	0.00	0.00	0.00
700.0	0.00	0.00	700.0	0.0	0.0	0.0	0.00	0.00	0.00
800.0	0.00	0.00	800.0	0.0	0.0	0.0	0.00	0.00	0.00
900.0	0.00	0.00	900.0	0.0	0.0	0.0	0.00	0.00	0.00
1,000.0	0.00	0.00	1,000.0	0.0	0.0	0.0	0.00	0.00	0.00
1,100.0	0.00	0.00	1,100.0	0.0	0.0	0.0	0.00	0.00	0.00
1,200.0	0.00	0.00	1,200.0	0.0	0.0	0.0	0.00	0.00	0.00
1,300.0	0.00	0.00	1,300.0	0.0	0.0	0.0	0.00	0.00	0.00
1,400.0	0.00	0.00	1,400.0	0.0	0.0	0.0	0.00	0.00	0.00
1,500.0	0.00	0.00	1,500.0	0.0	0.0	0.0	0.00	0.00	0.00
1,600.0	0.00	0.00	1,600.0	0.0	0.0	0.0	0.00	0.00	0.00
1,700.0	0.00	0.00	1,700.0	0.0	0.0	0.0	0.00	0.00	0.00
1,800.0	0.00	0.00	1,800.0	0.0	0.0	0.0	0.00	0.00	0.00
1,900.0	0.00	0.00	1,900.0	0.0	0.0	0.0	0.00	0.00	0.00
2,000.0	0.00	0.00	2,000.0	0.0	0.0	0.0	0.00	0.00	0.00
2,100.0	0.00	0.00	2,100.0	0.0	0.0	0.0	0.00	0.00	0.00
2,200.0	0.00	0.00	2,200.0	0.0	0.0	0.0	0.00	0.00	0.00
2,300.0	0.00	0.00	2,300.0	0.0	0.0	0.0	0.00	0.00	0.00
2,400.0	0.00	0.00	2,400.0	0.0	0.0	0.0	0.00	0.00	0.00
2,500.0	0.00	0.00	2,500.0	0.0	0.0	0.0	0.00	0.00	0.00
2,600.0	0.00	0.00	2,600.0	0.0	0.0	0.0	0.00	0.00	0.00
2,700.0	0.00	0.00	2,700.0	0.0	0.0	0.0	0.00	0.00	0.00
2,800.0	0.00	0.00	2,800.0	0.0	0.0	0.0	0.00	0.00	0.00
2,900.0	0.00	0.00	2,900.0	0.0	0.0	0.0	0.00	0.00	0.00
3,000.0	0.00	0.00	3,000.0	0.0	0.0	0.0	0.00	0.00	0.00
3,100.0	0.00	0.00	3,100.0	0.0	0.0	0.0	0.00	0.00	0.00
3,200.0	0.00	0.00	3,200.0	0.0	0.0	0.0	0.00	0.00	0.00
3,300.0	0.00	0.00	3,300.0	0.0	0.0	0.0	0.00	0.00	0.00
3,400.0	0.00	0.00	3,400.0	0.0	0.0	0.0	0.00	0.00	0.00
3,500.0	0.00	0.00	3,500.0	0.0	0.0	0.0	0.00	0.00	0.00
3,600.0	0.00	0.00	3,600.0	0.0	0.0	0.0	0.00	0.00	0.00
3,700.0	0.00	0.00	3,700.0	0.0	0.0	0.0	0.00	0.00	0.00
3,800.0	2.00	115.98	3,800.0	-0.8	1.6	-0.5	2.00	2.00	0.00
3,900.0	4.00	115.98	3,899.8	-3.1	6.3	-2.2	2.00	2.00	0.00
4,000.0	6.00	115.98	3,999.5	-6.9	14.1	-4.9	2.00	2.00	0.00
4,100.0	8.00	115.98	4,098.7	-12.2	25.1	-8.8	2.00	2.00	0.00
4,200.0	10.00	115.98	4,197.5	-19.1	39.1	-13.7	2.00	2.00	0.00
4,300.0	12.00	115.98	4,295.6	-27.4	56.3	-19.7	2.00	2.00	0.00
4,354.8	13.10	115.98	4,349.1	-32.6	67.0	-23.4	2.00	2.00	0.00
4,400.0	13.10	115.98	4,393.1	-37.1	76.2	-26.7	0.00	0.00	0.00
4,500.0	13.10	115.98	4,490.5	-47.1	96.6	-33.8	0.00	0.00	0.00
4,600.0	13.10	115.98	4,587.9	-57.0	116.9	-40.9	0.00	0.00	0.00
4,700.0	13.10	115.98	4,685.3	-66.9	137.3	-48.0	0.00	0.00	0.00
4,800.0	13.10	115.98	4,782.7	-76.8	157.7	-55.2	0.00	0.00	0.00
4,900.0	13.10	115.98	4,880.1	-86.8	178.0	-62.3	0.00	0.00	0.00
5,000.0	13.10	115.98	4,977.5	-96.7	198.4	-69.4	0.00	0.00	0.00
5,100.0	13.10	115.98	5,074.9	-106.6	218.8	-76.6	0.00	0.00	0.00

Planning Report

Database:	Hobbs	**Local Co-ordinate Reference:**	Site Cow Bell 9/4 Fed Com #907H
Company:	Mewbourne Oil Company	**TVD Reference:**	WELL @ 3848.0usft (Original Well Elev)
Project:	Lea County, New Mexico NAD 83	**MD Reference:**	WELL @ 3848.0usft (Original Well Elev)
Site:	Cow Bell 9/4 Fed Com #907H	**North Reference:**	Grid
Well:	Sec 09, T19S, R34E	**Survey Calculation Method:**	Minimum Curvature
Wellbore:	BHL: 100' FNL & 450' FEL (Sec 4)		
Design:	Design #1		

Planned Survey

Measured Depth (usft)	Inclination (°)	Azimuth (°)	Vertical Depth (usft)	+N/-S (usft)	+E/-W (usft)	Vertical Section (usft)	Dogleg Rate (°/100usft)	Build Rate (°/100usft)	Turn Rate (°/100usft)
5,200.0	13.10	115.98	5,172.3	-116.5	239.1	-83.7	0.00	0.00	0.00
5,300.0	13.10	115.98	5,269.7	-126.5	259.5	-90.8	0.00	0.00	0.00
5,400.0	13.10	115.98	5,367.1	-136.4	279.9	-97.9	0.00	0.00	0.00
5,500.0	13.10	115.98	5,464.5	-146.3	300.2	-105.1	0.00	0.00	0.00
5,600.0	13.10	115.98	5,561.9	-156.2	320.6	-112.2	0.00	0.00	0.00
5,700.0	13.10	115.98	5,659.3	-166.2	341.0	-119.3	0.00	0.00	0.00
5,800.0	13.10	115.98	5,756.7	-176.1	361.3	-126.5	0.00	0.00	0.00
5,900.0	13.10	115.98	5,854.1	-186.0	381.7	-133.6	0.00	0.00	0.00
6,000.0	13.10	115.98	5,951.5	-196.0	402.1	-140.7	0.00	0.00	0.00
6,100.0	13.10	115.98	6,048.9	-205.9	422.4	-147.8	0.00	0.00	0.00
6,200.0	13.10	115.98	6,146.3	-215.8	442.8	-155.0	0.00	0.00	0.00
6,300.0	13.10	115.98	6,243.7	-225.7	463.2	-162.1	0.00	0.00	0.00
6,400.0	13.10	115.98	6,341.1	-235.7	483.5	-169.2	0.00	0.00	0.00
6,500.0	13.10	115.98	6,438.5	-245.6	503.9	-176.4	0.00	0.00	0.00
6,600.0	13.10	115.98	6,535.9	-255.5	524.3	-183.5	0.00	0.00	0.00
6,645.2	13.10	115.98	6,580.0	-260.0	533.5	-186.7	0.00	0.00	0.00
Entry L029490005: 0 FSL & 1338 FEL (9)									
6,700.0	13.10	115.98	6,633.3	-265.4	544.6	-190.6	0.00	0.00	0.00
6,800.0	13.10	115.98	6,730.7	-275.4	565.0	-197.7	0.00	0.00	0.00
6,900.0	13.10	115.98	6,828.1	-285.3	585.4	-204.9	0.00	0.00	0.00
7,000.0	13.10	115.98	6,925.5	-295.2	605.7	-212.0	0.00	0.00	0.00
7,100.0	13.10	115.98	7,022.9	-305.1	626.1	-219.1	0.00	0.00	0.00
7,200.0	13.10	115.98	7,120.3	-315.1	646.5	-226.3	0.00	0.00	0.00
7,300.0	13.10	115.98	7,217.7	-325.0	666.9	-233.4	0.00	0.00	0.00
7,400.0	13.10	115.98	7,315.1	-334.9	687.2	-240.5	0.00	0.00	0.00
7,500.0	13.10	115.98	7,412.5	-344.8	707.6	-247.6	0.00	0.00	0.00
7,600.0	13.10	115.98	7,509.9	-354.8	728.0	-254.8	0.00	0.00	0.00
7,700.0	13.10	115.98	7,607.3	-364.7	748.3	-261.9	0.00	0.00	0.00
7,800.0	13.10	115.98	7,704.7	-374.6	768.7	-269.0	0.00	0.00	0.00
7,900.0	13.10	115.98	7,802.1	-384.6	789.1	-276.2	0.00	0.00	0.00
8,000.0	13.10	115.98	7,899.5	-394.5	809.4	-283.3	0.00	0.00	0.00
8,100.0	13.10	115.98	7,996.9	-404.4	829.8	-290.4	0.00	0.00	0.00
8,200.0	13.10	115.98	8,094.3	-414.3	850.2	-297.5	0.00	0.00	0.00
8,300.0	13.10	115.98	8,191.7	-424.3	870.5	-304.7	0.00	0.00	0.00
8,400.0	13.10	115.98	8,289.1	-434.2	890.9	-311.8	0.00	0.00	0.00
8,500.0	13.10	115.98	8,386.5	-444.1	911.3	-318.9	0.00	0.00	0.00
8,600.0	13.10	115.98	8,483.9	-454.0	931.6	-326.1	0.00	0.00	0.00
8,700.0	13.10	115.98	8,581.3	-464.0	952.0	-333.2	0.00	0.00	0.00
8,800.0	13.10	115.98	8,678.7	-473.9	972.4	-340.3	0.00	0.00	0.00
8,900.0	13.10	115.98	8,776.1	-483.8	992.7	-347.4	0.00	0.00	0.00
9,000.0	13.10	115.98	8,873.5	-493.7	1,013.1	-354.6	0.00	0.00	0.00
9,100.0	13.10	115.98	8,970.9	-503.7	1,033.5	-361.7	0.00	0.00	0.00
9,200.0	13.10	115.98	9,068.3	-513.6	1,053.8	-368.8	0.00	0.00	0.00
9,300.0	13.10	115.98	9,165.7	-523.5	1,074.2	-376.0	0.00	0.00	0.00
9,400.0	13.10	115.98	9,263.1	-533.4	1,094.6	-383.1	0.00	0.00	0.00
9,500.0	13.10	115.98	9,360.5	-543.4	1,114.9	-390.2	0.00	0.00	0.00
9,600.0	13.10	115.98	9,457.9	-553.3	1,135.3	-397.3	0.00	0.00	0.00
9,700.0	13.10	115.98	9,555.3	-563.2	1,155.7	-404.5	0.00	0.00	0.00
9,800.0	13.10	115.98	9,652.7	-573.2	1,176.0	-411.6	0.00	0.00	0.00
9,900.0	13.10	115.98	9,750.1	-583.1	1,196.4	-418.7	0.00	0.00	0.00
10,000.0	13.10	115.98	9,847.5	-593.0	1,216.8	-425.9	0.00	0.00	0.00
10,100.0	13.10	115.98	9,944.9	-602.9	1,237.1	-433.0	0.00	0.00	0.00
10,200.0	13.10	115.98	10,042.3	-612.9	1,257.5	-440.1	0.00	0.00	0.00

Planning Report

Database:	Hobbs	**Local Co-ordinate Reference:**	Site Cow Bell 9/4 Fed Com #907H
Company:	Mewbourne Oil Company	**TVD Reference:**	WELL @ 3848.0usft (Original Well Elev)
Project:	Lea County, New Mexico NAD 83	**MD Reference:**	WELL @ 3848.0usft (Original Well Elev)
Site:	Cow Bell 9/4 Fed Com #907H	**North Reference:**	Grid
Well:	Sec 09, T19S, R34E	**Survey Calculation Method:**	Minimum Curvature
Wellbore:	BHL: 100' FNL & 450' FEL (Sec 4)		
Design:	Design #1		

Planned Survey

Measured Depth (usft)	Inclination (°)	Azimuth (°)	Vertical Depth (usft)	+N/-S (usft)	+E/-W (usft)	Vertical Section (usft)	Dogleg Rate (°/100usft)	Build Rate (°/100usft)	Turn Rate (°/100usft)
10,300.0	13.10	115.98	10,139.7	-622.8	1,277.9	-447.2	0.00	0.00	0.00
10,400.0	13.10	115.98	10,237.1	-632.7	1,298.3	-454.4	0.00	0.00	0.00
10,500.0	13.10	115.98	10,334.5	-642.6	1,318.6	-461.5	0.00	0.00	0.00
10,600.0	13.10	115.98	10,431.9	-652.6	1,339.0	-468.6	0.00	0.00	0.00
10,700.0	13.10	115.98	10,529.3	-662.5	1,359.4	-475.8	0.00	0.00	0.00
10,800.0	13.10	115.98	10,626.7	-672.4	1,379.7	-482.9	0.00	0.00	0.00
10,900.0	13.10	115.98	10,724.1	-682.3	1,400.1	-490.0	0.00	0.00	0.00
10,919.3	13.10	115.98	10,742.9	-684.3	1,404.0	-491.4	0.00	0.00	0.00
11,000.0	11.48	115.98	10,821.7	-691.8	1,419.5	-496.8	2.00	-2.00	0.00
11,100.0	9.48	115.98	10,920.1	-699.8	1,435.8	-502.5	2.00	-2.00	0.00
11,200.0	7.48	115.98	11,019.0	-706.2	1,449.1	-507.2	2.00	-2.00	0.00
11,300.0	5.48	115.98	11,118.3	-711.2	1,459.2	-510.7	2.00	-2.00	0.00
11,400.0	3.48	115.98	11,218.0	-714.6	1,466.2	-513.2	2.00	-2.00	0.00
11,500.0	1.48	115.98	11,317.9	-716.5	1,470.1	-514.5	2.00	-2.00	0.00
11,574.1	0.00	0.01	11,392.0	-716.9	1,471.0	-514.8	2.00	-2.00	0.00
KOP: 473' FNL & 450' FEL (Sec 16)									
11,600.0	2.59	359.58	11,417.9	-716.3	1,471.0	-514.3	10.00	10.00	0.00
11,650.0	7.59	359.58	11,467.7	-711.9	1,471.0	-509.9	10.00	10.00	0.00
11,700.0	12.59	359.58	11,516.9	-703.1	1,470.9	-501.2	10.00	10.00	0.00
11,750.0	17.59	359.58	11,565.2	-690.1	1,470.8	-488.3	10.00	10.00	0.00
11,800.0	22.59	359.58	11,612.1	-672.9	1,470.7	-471.3	10.00	10.00	0.00
11,850.0	27.59	359.58	11,657.4	-651.8	1,470.5	-450.3	10.00	10.00	0.00
11,900.0	32.59	359.58	11,700.6	-626.7	1,470.3	-425.5	10.00	10.00	0.00
11,950.0	37.59	359.58	11,741.5	-598.0	1,470.1	-397.1	10.00	10.00	0.00
11,954.4	38.03	359.58	11,745.0	-595.3	1,470.1	-394.4	10.00	10.00	0.00
Formation Canyon: 336 FNL & 450 FEL (16)									
12,000.0	42.58	359.58	11,779.8	-565.8	1,469.9	-365.2	10.00	10.00	0.00
12,050.0	47.58	359.58	11,815.1	-530.4	1,469.6	-330.2	10.00	10.00	0.00
12,100.0	52.58	359.58	11,847.1	-492.1	1,469.4	-292.2	10.00	10.00	0.00
12,150.0	57.58	359.58	11,875.7	-451.1	1,469.1	-251.6	10.00	10.00	0.00
12,200.0	62.58	359.58	11,900.7	-407.7	1,468.7	-208.7	10.00	10.00	0.00
12,250.0	67.58	359.58	11,921.7	-362.4	1,468.4	-163.8	10.00	10.00	0.00
12,300.0	72.58	359.58	11,938.8	-315.4	1,468.1	-117.3	10.00	10.00	0.00
12,350.0	77.58	359.58	11,951.6	-267.1	1,467.7	-69.5	10.00	10.00	0.00
12,358.1	78.39	359.58	11,953.3	-259.2	1,467.7	-61.7	10.00	10.00	0.00
Exit L029490005: 0 FSL & 450 FEL (9)									
12,400.0	82.58	359.58	11,960.2	-217.9	1,467.4	-20.7	10.00	10.00	0.00
12,450.0	87.58	359.58	11,964.5	-168.1	1,467.0	28.6	10.00	10.00	0.00
12,474.1	89.99	359.58	11,965.0	-144.0	1,466.8	52.4	10.00	10.00	0.00
FTP/LP: 100' FSL & 450' FEL (Sec 9)									
12,480.2	90.60	359.58	11,965.0	-137.9	1,466.8	58.5	10.00	10.00	0.00
12,500.0	90.60	359.58	11,964.8	-118.1	1,466.6	78.1	0.00	0.00	0.00
12,600.0	90.60	359.58	11,963.7	-18.1	1,465.9	177.1	0.00	0.00	0.00
12,700.0	90.60	359.58	11,962.7	81.9	1,465.2	276.1	0.00	0.00	0.00
12,800.0	90.60	359.58	11,961.6	181.9	1,464.4	375.1	0.00	0.00	0.00
12,900.0	90.60	359.58	11,960.6	281.9	1,463.7	474.1	0.00	0.00	0.00
13,000.0	90.60	359.58	11,959.6	381.9	1,463.0	573.1	0.00	0.00	0.00
13,100.0	90.60	359.58	11,958.5	481.9	1,462.2	672.1	0.00	0.00	0.00
13,200.0	90.60	359.58	11,957.5	581.8	1,461.5	771.1	0.00	0.00	0.00
13,300.0	90.60	359.58	11,956.4	681.8	1,460.8	870.1	0.00	0.00	0.00
13,400.0	90.60	359.58	11,955.4	781.8	1,460.1	969.1	0.00	0.00	0.00
13,500.0	90.60	359.58	11,954.3	881.8	1,459.3	1,068.1	0.00	0.00	0.00
13,600.0	90.60	359.58	11,953.3	981.8	1,458.6	1,167.1	0.00	0.00	0.00
13,700.0	90.60	359.58	11,952.2	1,081.8	1,457.9	1,266.1	0.00	0.00	0.00

Planning Report

Database:	Hobbs	**Local Co-ordinate Reference:**	Site Cow Bell 9/4 Fed Com #907H
Company:	Mewbourne Oil Company	**TVD Reference:**	WELL @ 3848.0usft (Original Well Elev)
Project:	Lea County, New Mexico NAD 83	**MD Reference:**	WELL @ 3848.0usft (Original Well Elev)
Site:	Cow Bell 9/4 Fed Com #907H	**North Reference:**	Grid
Well:	Sec 09, T19S, R34E	**Survey Calculation Method:**	Minimum Curvature
Wellbore:	BHL: 100' FNL & 450' FEL (Sec 4)		
Design:	Design #1		

Planned Survey

Measured Depth (usft)	Inclination (°)	Azimuth (°)	Vertical Depth (usft)	+N/-S (usft)	+E/-W (usft)	Vertical Section (usft)	Dogleg Rate (°/100usft)	Build Rate (°/100usft)	Turn Rate (°/100usft)
13,800.0	90.60	359.58	11,951.2	1,181.8	1,457.1	1,365.1	0.00	0.00	0.00
13,900.0	90.60	359.58	11,950.1	1,281.8	1,456.4	1,464.1	0.00	0.00	0.00
14,000.0	90.60	359.58	11,949.1	1,381.8	1,455.7	1,563.1	0.00	0.00	0.00
14,100.0	90.60	359.58	11,948.0	1,481.8	1,454.9	1,662.2	0.00	0.00	0.00
14,200.0	90.60	359.58	11,947.0	1,581.8	1,454.2	1,761.2	0.00	0.00	0.00
14,300.0	90.60	359.58	11,945.9	1,681.8	1,453.5	1,860.2	0.00	0.00	0.00
14,400.0	90.60	359.58	11,944.9	1,781.7	1,452.7	1,959.2	0.00	0.00	0.00
14,500.0	90.60	359.58	11,943.8	1,881.7	1,452.0	2,058.2	0.00	0.00	0.00
14,600.0	90.60	359.58	11,942.8	1,981.7	1,451.3	2,157.2	0.00	0.00	0.00
14,700.0	90.60	359.58	11,941.7	2,081.7	1,450.6	2,256.2	0.00	0.00	0.00
14,800.0	90.60	359.58	11,940.7	2,181.7	1,449.8	2,355.2	0.00	0.00	0.00
14,900.0	90.60	359.58	11,939.6	2,281.7	1,449.1	2,454.2	0.00	0.00	0.00
15,000.0	90.60	359.58	11,938.6	2,381.7	1,448.4	2,553.2	0.00	0.00	0.00
15,012.3	90.60	359.58	11,938.5	2,394.0	1,448.3	2,565.4	0.00	0.00	0.00
PPP2: 2639' FSL & 447' FEL (Sec 9)									
15,100.0	90.60	359.58	11,937.5	2,481.7	1,447.6	2,652.2	0.00	0.00	0.00
15,200.0	90.60	359.58	11,936.5	2,581.7	1,446.9	2,751.2	0.00	0.00	0.00
15,300.0	90.60	359.58	11,935.4	2,681.7	1,446.2	2,850.2	0.00	0.00	0.00
15,400.0	90.60	359.58	11,934.4	2,781.7	1,445.4	2,949.2	0.00	0.00	0.00
15,500.0	90.60	359.58	11,933.3	2,881.7	1,444.7	3,048.2	0.00	0.00	0.00
15,600.0	90.60	359.58	11,932.3	2,981.6	1,444.0	3,147.2	0.00	0.00	0.00
15,700.0	90.60	359.58	11,931.3	3,081.6	1,443.2	3,246.2	0.00	0.00	0.00
15,800.0	90.60	359.58	11,930.2	3,181.6	1,442.5	3,345.3	0.00	0.00	0.00
15,900.0	90.60	359.58	11,929.2	3,281.6	1,441.8	3,444.3	0.00	0.00	0.00
16,000.0	90.60	359.58	11,928.1	3,381.6	1,441.1	3,543.3	0.00	0.00	0.00
16,100.0	90.60	359.58	11,927.1	3,481.6	1,440.3	3,642.3	0.00	0.00	0.00
16,200.0	90.60	359.58	11,926.0	3,581.6	1,439.6	3,741.3	0.00	0.00	0.00
16,300.0	90.60	359.58	11,925.0	3,681.6	1,438.9	3,840.3	0.00	0.00	0.00
16,400.0	90.60	359.58	11,923.9	3,781.6	1,438.1	3,939.3	0.00	0.00	0.00
16,500.0	90.60	359.58	11,922.9	3,881.6	1,437.4	4,038.3	0.00	0.00	0.00
16,600.0	90.60	359.58	11,921.8	3,981.6	1,436.7	4,137.3	0.00	0.00	0.00
16,700.0	90.60	359.58	11,920.8	4,081.6	1,435.9	4,236.3	0.00	0.00	0.00
16,800.0	90.60	359.58	11,919.7	4,181.5	1,435.2	4,335.3	0.00	0.00	0.00
16,900.0	90.60	359.58	11,918.7	4,281.5	1,434.5	4,434.3	0.00	0.00	0.00
17,000.0	90.60	359.58	11,917.6	4,381.5	1,433.8	4,533.3	0.00	0.00	0.00
17,100.0	90.60	359.58	11,916.6	4,481.5	1,433.0	4,632.3	0.00	0.00	0.00
17,200.0	90.60	359.58	11,915.5	4,581.5	1,432.3	4,731.3	0.00	0.00	0.00
17,300.0	90.60	359.58	11,914.5	4,681.5	1,431.6	4,830.3	0.00	0.00	0.00
17,400.0	90.60	359.58	11,913.4	4,781.5	1,430.8	4,929.3	0.00	0.00	0.00
17,500.0	90.60	359.58	11,912.4	4,881.5	1,430.1	5,028.4	0.00	0.00	0.00
17,600.0	90.60	359.58	11,911.3	4,981.5	1,429.4	5,127.4	0.00	0.00	0.00
17,700.0	90.60	359.58	11,910.3	5,081.5	1,428.6	5,226.4	0.00	0.00	0.00
17,800.0	90.60	359.58	11,909.2	5,181.5	1,427.9	5,325.4	0.00	0.00	0.00
17,900.0	90.60	359.58	11,908.2	5,281.5	1,427.2	5,424.4	0.00	0.00	0.00
18,000.0	90.60	359.58	11,907.1	5,381.5	1,426.4	5,523.4	0.00	0.00	0.00
18,100.0	90.60	359.58	11,906.1	5,481.4	1,425.7	5,622.4	0.00	0.00	0.00
18,200.0	90.60	359.58	11,905.1	5,581.4	1,425.0	5,721.4	0.00	0.00	0.00
18,300.0	90.60	359.58	11,904.0	5,681.4	1,424.3	5,820.4	0.00	0.00	0.00
18,400.0	90.60	359.58	11,903.0	5,781.4	1,423.5	5,919.4	0.00	0.00	0.00
18,500.0	90.60	359.58	11,901.9	5,881.4	1,422.8	6,018.4	0.00	0.00	0.00
18,600.0	90.60	359.58	11,900.9	5,981.4	1,422.1	6,117.4	0.00	0.00	0.00
18,700.0	90.60	359.58	11,899.8	6,081.4	1,421.3	6,216.4	0.00	0.00	0.00
18,800.0	90.60	359.58	11,898.8	6,181.4	1,420.6	6,315.4	0.00	0.00	0.00

Planning Report

Database:	Hobbs	**Local Co-ordinate Reference:**	Site Cow Bell 9/4 Fed Com #907H
Company:	Mewbourne Oil Company	**TVD Reference:**	WELL @ 3848.0usft (Original Well Elev)
Project:	Lea County, New Mexico NAD 83	**MD Reference:**	WELL @ 3848.0usft (Original Well Elev)
Site:	Cow Bell 9/4 Fed Com #907H	**North Reference:**	Grid
Well:	Sec 09, T19S, R34E	**Survey Calculation Method:**	Minimum Curvature
Wellbore:	BHL: 100' FNL & 450' FEL (Sec 4)		
Design:	Design #1		

Planned Survey

Measured Depth (usft)	Inclination (°)	Azimuth (°)	Vertical Depth (usft)	+N/-S (usft)	+E/-W (usft)	Vertical Section (usft)	Dogleg Rate (°/100usft)	Build Rate (°/100usft)	Turn Rate (°/100usft)
18,900.0	90.60	359.58	11,897.7	6,281.4	1,419.9	6,414.4	0.00	0.00	0.00
18,970.8	90.60	359.58	11,897.0	6,352.2	1,419.4	6,484.6	0.00	0.00	0.00
PPP3: 1320' FNL & 445' FEL (Sec 4)									
19,000.0	90.60	359.58	11,896.7	6,381.4	1,419.1	6,513.4	0.00	0.00	0.00
19,100.0	90.60	359.58	11,895.6	6,481.4	1,418.4	6,612.4	0.00	0.00	0.00
19,200.0	90.60	359.58	11,894.6	6,581.4	1,417.7	6,711.5	0.00	0.00	0.00
19,300.0	90.60	359.58	11,893.5	6,681.3	1,416.9	6,810.5	0.00	0.00	0.00
19,400.0	90.60	359.58	11,892.5	6,781.3	1,416.2	6,909.5	0.00	0.00	0.00
19,500.0	90.60	359.58	11,891.4	6,881.3	1,415.5	7,008.5	0.00	0.00	0.00
19,600.0	90.60	359.58	11,890.4	6,981.3	1,414.8	7,107.5	0.00	0.00	0.00
19,700.0	90.60	359.58	11,889.3	7,081.3	1,414.0	7,206.5	0.00	0.00	0.00
19,800.0	90.60	359.58	11,888.3	7,181.3	1,413.3	7,305.5	0.00	0.00	0.00
19,900.0	90.60	359.58	11,887.2	7,281.3	1,412.6	7,404.5	0.00	0.00	0.00
20,000.0	90.60	359.58	11,886.2	7,381.3	1,411.8	7,503.5	0.00	0.00	0.00
20,100.0	90.60	359.58	11,885.1	7,481.3	1,411.1	7,602.5	0.00	0.00	0.00
20,200.0	90.60	359.58	11,884.1	7,581.3	1,410.4	7,701.5	0.00	0.00	0.00
20,300.0	90.60	359.58	11,883.0	7,681.3	1,409.6	7,800.5	0.00	0.00	0.00
20,400.0	90.60	359.58	11,882.0	7,781.3	1,408.9	7,899.5	0.00	0.00	0.00
20,500.0	90.60	359.58	11,880.9	7,881.2	1,408.2	7,998.5	0.00	0.00	0.00
20,600.0	90.60	359.58	11,879.9	7,981.2	1,407.5	8,097.5	0.00	0.00	0.00
20,700.0	90.60	359.58	11,878.8	8,081.2	1,406.7	8,196.5	0.00	0.00	0.00
20,800.0	90.60	359.58	11,877.8	8,181.2	1,406.0	8,295.5	0.00	0.00	0.00
20,900.0	90.60	359.58	11,876.8	8,281.2	1,405.3	8,394.6	0.00	0.00	0.00
21,000.0	90.60	359.58	11,875.7	8,381.2	1,404.5	8,493.6	0.00	0.00	0.00
21,100.0	90.60	359.58	11,874.7	8,481.2	1,403.8	8,592.6	0.00	0.00	0.00
21,200.0	90.60	359.58	11,873.6	8,581.2	1,403.1	8,691.6	0.00	0.00	0.00
21,300.0	90.60	359.58	11,872.6	8,681.2	1,402.3	8,790.6	0.00	0.00	0.00
21,400.0	90.60	359.58	11,871.5	8,781.2	1,401.6	8,889.6	0.00	0.00	0.00
21,500.0	90.60	359.58	11,870.5	8,881.2	1,400.9	8,988.6	0.00	0.00	0.00
21,600.0	90.60	359.58	11,869.4	8,981.2	1,400.1	9,087.6	0.00	0.00	0.00
21,700.0	90.60	359.58	11,868.4	9,081.1	1,399.4	9,186.6	0.00	0.00	0.00
21,800.0	90.60	359.58	11,867.3	9,181.1	1,398.7	9,285.6	0.00	0.00	0.00
21,900.0	90.60	359.58	11,866.3	9,281.1	1,398.0	9,384.6	0.00	0.00	0.00
22,000.0	90.60	359.58	11,865.2	9,381.1	1,397.2	9,483.6	0.00	0.00	0.00
22,100.0	90.60	359.58	11,864.2	9,481.1	1,396.5	9,582.6	0.00	0.00	0.00
22,200.0	90.60	359.58	11,863.1	9,581.1	1,395.8	9,681.6	0.00	0.00	0.00
22,300.0	90.60	359.58	11,862.1	9,681.1	1,395.0	9,780.6	0.00	0.00	0.00
22,400.0	90.60	359.58	11,861.0	9,781.1	1,394.3	9,879.6	0.00	0.00	0.00
22,500.0	90.60	359.58	11,860.0	9,881.1	1,393.6	9,978.6	0.00	0.00	0.00
22,600.0	90.60	359.58	11,858.9	9,981.1	1,392.8	10,077.7	0.00	0.00	0.00
22,700.0	90.60	359.58	11,857.9	10,081.1	1,392.1	10,176.7	0.00	0.00	0.00
22,800.0	90.60	359.58	11,856.8	10,181.1	1,391.4	10,275.7	0.00	0.00	0.00
22,900.0	90.60	359.58	11,855.8	10,281.1	1,390.7	10,374.7	0.00	0.00	0.00
22,975.5	90.60	359.58	11,855.0	10,356.5	1,390.1	10,449.4	0.00	0.00	0.00
BHL: 100' FNL & 450' FEL (Sec 4)									

Planning Report

Database:	Hobbs	**Local Co-ordinate Reference:**	Site Cow Bell 9/4 Fed Com #907H
Company:	Mewbourne Oil Company	**TVD Reference:**	WELL @ 3848.0usft (Original Well Elev)
Project:	Lea County, New Mexico NAD 83	**MD Reference:**	WELL @ 3848.0usft (Original Well Elev)
Site:	Cow Bell 9/4 Fed Com #907H	**North Reference:**	Grid
Well:	Sec 09, T19S, R34E	**Survey Calculation Method:**	Minimum Curvature
Wellbore:	BHL: 100' FNL & 450' FEL (Sec 4)		
Design:	Design #1		

Design Targets

Target Name - hit/miss target - Shape	Dip Angle (°)	Dip Dir. (°)	TVD (usft)	+N/-S (usft)	+E/-W (usft)	Northing (usft)	Easting (usft)	Latitude	Longitude
SHL: 260' FSL & 1915' F - plan hits target center - Point	0.00	0.00	0.0	0.0	0.0	607,692.90	778,409.60	32.6682284	-103.5629251
Entry L029490005: 0 FS - plan hits target center - Point	0.00	0.00	6,580.0	-260.0	533.5	607,432.90	778,943.09	32.6675032	-103.5611977
KOP: 473' FNL & 450' FI - plan hits target center - Point	0.00	0.01	11,392.0	-716.9	1,471.0	606,976.00	779,880.60	32.6662286	-103.5581622
Formation Canyon: 336 - plan hits target center - Point	0.00	0.00	11,745.0	-595.3	1,470.1	607,097.64	779,879.71	32.6665629	-103.5581622
BHL: 100' FNL & 450' FE - plan hits target center - Point	0.00	0.00	11,855.0	10,356.5	1,390.1	618,049.40	779,799.70	32.6966650	-103.5581622
PPP3: 1320' FNL & 445' - plan hits target center - Point	0.00	0.00	11,897.0	6,352.2	1,419.4	614,045.10	779,828.95	32.6856588	-103.5581623
PPP2: 2639' FSL & 447' - plan hits target center - Point	0.00	0.00	11,938.5	2,394.0	1,448.3	610,086.90	779,857.87	32.6747792	-103.5581622
Exit L029490005: 0 FSL - plan hits target center - Point	0.00	0.00	11,953.3	-259.2	1,467.7	607,433.70	779,877.25	32.6674866	-103.5581622
FTP/LP: 100' FSL & 450 - plan hits target center - Point	0.00	0.00	11,965.0	-144.0	1,466.8	607,548.90	779,876.41	32.6678033	-103.5581622

State of New Mexico
Energy, Minerals and Natural Resources Department

Submit Electronically
Via E-permitting

Oil Conservation Division
1220 South St. Francis Dr.
Santa Fe, NM 87505

NATURAL GAS MANAGEMENT PLAN

This Natural Gas Management Plan must be submitted with each Application for Permit to Drill (APD) for a new or recompleted well.

Section 1 – Plan Description
Effective May 25, 2021

I. Operator: MEWBOURNE OIL CO. **OGRID:** 14744 **Date:** 8/13/26

II. Type: ☒ Original ☐ Amendment due to ☐ 19.15.27.9.D(6)(a) NMAC ☐ 19.15.27.9.D(6)(b) NMAC ☐ Other.

If Other, please describe: _____

III. Well(s): Provide the following information for each new or recompleted well or set of wells proposed to be drilled or proposed to be recompleted from a single well pad or connected to a central delivery point.

Well Name	API	ULSTR	Footages	Anticipated Oil BBL/D	Anticipated Gas MCF/D	Anticipated Produced Water BBL/D
COW BELL 9/4 FED COM 315H		O 9 19S 34E	210' FSL X 1955' FEL	1000	3000	4000
COW BELL 9/4 FED COM 407H			210' FSL X 1935' FEL			
				Y1-300 Y2-200 Y3-100		Y1-1200 Y2-800 Y3-400
					Y1-900 Y2-600 Y3-300	
COW BELL 9/4 FED COM 905H			210' FSL X 1975' FEL	1000	8000	4000
COW BELL 9/4 FED COM 907H			210' FSL X 1915' FEL			
				Y1-500 Y2-300 Y3-200		Y1-2000Y 2-1200 Y3-800
					Y1-4000 Y2-2500 Y3-1600	

IV. Central Delivery Point Name: COW BELL 9/4 FED COM [See 19.15.27.9(D)(1) NMAC]

V. Anticipated Schedule: Provide the following information for each new or recompleted well or set of wells proposed to be drilled or proposed to be recompleted from a single well pad or connected to a central delivery point.

Well Name	API	Spud Date	TD Reached Date	Completion Commencement Date	Initial Flow Back Date	First Production Date
COW BELL 9/4 FED COM		9/13/26	10/13/26	11/13/26	11/28/26	12/3/26

VI. Separation Equipment: ☒ Attach a complete description of how Operator will size separation equipment to optimize gas capture.

VII. Operational Practices: ☒ Attach a complete description of the actions Operator will take to comply with the requirements of Subsection A through F of 19.15.27.8 NMAC.

VIII. Best Management Practices: ☒ Attach a complete description of Operator's best management practices to minimize venting during active and planned maintenance.

Section 2 – Enhanced Plan

EFFECTIVE APRIL 1, 2022

Beginning April 1, 2022, an operator that is not in compliance with its statewide natural gas capture requirement for the applicable reporting area must complete this section.

☒ Operator certifies that it is not required to complete this section because Operator is in compliance with its statewide natural gas capture requirement for the applicable reporting area.

IX. Anticipated Natural Gas Production:

Well	API	Anticipated Average Natural Gas Rate MCF/D	Anticipated Volume of Natural Gas for the First Year MCF

X. Natural Gas Gathering System (NGGS):

Operator	System	ULSTR of Tie-in	Anticipated Gathering Start Date	Available Maximum Daily Capacity of System Segment Tie-in

XI. Map. ☐ Attach an accurate and legible map depicting the location of the well(s), the anticipated pipeline route(s) connecting the production operations to the existing or planned interconnect of the natural gas gathering system(s), and the maximum daily capacity of the segment or portion of the natural gas gathering system(s) to which the well(s) will be connected.

XII. Line Capacity. The natural gas gathering system ☐ will ☐ will not have capacity to gather 100% of the anticipated natural gas production volume from the well prior to the date of first production.

XIII. Line Pressure. Operator ☐ does ☐ does not anticipate that its existing well(s) connected to the same segment, or portion, of the natural gas gathering system(s) described above will continue to meet anticipated increases in line pressure caused by the new well(s).

☐ Attach Operator's plan to manage production in response to the increased line pressure.

XIV. Confidentiality: ☐ Operator asserts confidentiality pursuant to Section 71-2-8 NMSA 1978 for the information provided in Section 2 as provided in Paragraph (2) of Subsection D of 19.15.27.9 NMAC, and attaches a full description of the specific information for which confidentiality is asserted and the basis for such assertion.

Section 3 - Certifications

Effective May 25, 2021

Operator certifies that, after reasonable inquiry and based on the available information at the time of submittal:

☒ Operator will be able to connect the well(s) to a natural gas gathering system in the general area with sufficient capacity to transport one hundred percent of the anticipated volume of natural gas produced from the well(s) commencing on the date of first production, taking into account the current and anticipated volumes of produced natural gas from other wells connected to the pipeline gathering system; or

☐ Operator will not be able to connect to a natural gas gathering system in the general area with sufficient capacity to transport one hundred percent of the anticipated volume of natural gas produced from the well(s) commencing on the date of first production, taking into account the current and anticipated volumes of produced natural gas from other wells connected to the pipeline gathering system. ***If Operator checks this box, Operator will select one of the following:***

Well Shut-In. ☐ Operator will shut-in and not produce the well until it submits the certification required by Paragraph (4) of Subsection D of 19.15.27.9 NMAC; or

Venting and Flaring Plan. ☐ Operator has attached a venting and flaring plan that evaluates and selects one or more of the potential alternative beneficial uses for the natural gas until a natural gas gathering system is available, including:

- **(a)** power generation on lease;
- **(b)** power generation for grid;
- **(c)** compression on lease;
- **(d)** liquids removal on lease;
- **(e)** reinjection for underground storage;
- **(f)** reinjection for temporary storage;
- **(g)** reinjection for enhanced oil recovery;
- **(h)** fuel cell production; and
- **(i)** other alternative beneficial uses approved by the division.

Section 4 - Notices

1. If, at any time after Operator submits this Natural Gas Management Plan and before the well is spud:

(a) Operator becomes aware that the natural gas gathering system it planned to connect the well(s) to has become unavailable or will not have capacity to transport one hundred percent of the production from the well(s), no later than 20 days after becoming aware of such information, Operator shall submit for OCD's approval a new or revised venting and flaring plan containing the information specified in Paragraph (5) of Subsection D of 19.15.27.9 NMAC; or

(b) Operator becomes aware that it has, cumulatively for the year, become out of compliance with its baseline natural gas capture rate or natural gas capture requirement, no later than 20 days after becoming aware of such information, Operator shall submit for OCD's approval a new or revised Natural Gas Management Plan for each well it plans to spud during the next 90 days containing the information specified in Paragraph (2) of Subsection D of 19.15.27.9 NMAC, and shall file an update for each Natural Gas Management Plan until Operator is back in compliance with its baseline natural gas capture rate or natural gas capture requirement.

2. OCD may deny or conditionally approve an APD if Operator does not make a certification, fails to submit an adequate venting and flaring plan which includes alternative beneficial uses for the anticipated volume of natural gas produced, or if OCD determines that Operator will not have adequate natural gas takeaway capacity at the time a well will be spud.

I certify that, after reasonable inquiry, the statements in and attached to this Natural Gas Management Plan are true and correct to the best of my knowledge and acknowledge that a false statement may be subject to civil and criminal penalties under the Oil and Gas Act.

Signature:	
Printed Name:	BRADLEY BISHOP
Title:	REGULATORY MANAGER
E-mail Address:	BBISHOP@MEWBOURNE.COM
Date:	8/13/26
Phone:	575-393-5905

OIL CONSERVATION DIVISION **(Only applicable when submitted as a standalone form)**
Approved By:
Title:
Approval Date:
Conditions of Approval:

Mewbourne Oil Company

Natural Gas Management Plan – Attachment

VI. Separation equipment will be sized by construction engineering staff based on stated manufacturer daily throughput capacities and anticipated daily production rates to ensure adequate capacity. Closed vent system piping, compression needs, and VRUs will be sized utilizing ProMax modelling software to ensure adequate capacity for anticipated production volumes and conditions.

VII. Mewbourne Oil Company (MOC) will take following actions to comply with the regulations listed in 19.15.27.8 :

A. MOC will maximize the recovery of natural gas by minimizing the waste, as defined by 19.15.2 NMAC, of natural gas through venting and flaring. MOC will ensure that well(s) will be connected to a natural gas gathering system with sufficient capacity to transport natural gas. If there is no adequate takeaway for the gas, well(s) will be shut in until the natural gas gathering system is available.
B. All drilling operations will be equipped with a rig flare located at least 100 ft from the nearest surface hole. Rig flare will be utilized to combust any natural gas that is brought to surface during normal drilling operations. In the case of emergency venting or flaring the volumes will be estimated and reported appropriately.
C. During completion operations any natural gas brought to surface will be flared. Immediately following the finish of completion operations, all well flow will be directed to permanent separation equipment. Produced natural gas from separation equipment will be sent to sales. It is not anticipated that gas will not meet pipeline standards. However, if natural gas does not meet gathering pipeline quality specifications, MOC will flare the natural gas for 60 days or until the natural gas meets the pipeline quality specifications, whichever is sooner. MOC will ensure that the flare is sized properly and is equipped with automatic igniter or continuous pilot. The gas sample will analyzed twice per week and the gas will be routed into a gathering system as soon as pipeline specifications are met.
D. Natural gas will not be flared with the exceptions and provisions listed in the 19.15.27.8 D.(1) through (4). If there is no adequate takeaway for the separator gas, well(s) will be shut in until the natural gas gathering system is available with exception of emergency or malfunction situations. Venting and/or flaring volumes will be estimated and reported appropriately.
E. MOC will comply with the performance standards requirements and provisions listed in 19.15.27.8 E.(1) through (8). All equipment will be designed and sized to handle maximum anticipated pressures and throughputs in order to minimize the waste. Production storage tanks constructed after May 25, 2021 will be equipped with automatic gauging system. Flares constructed after May 25, 2021 will be equipped with automatic igniter or continuous pilot. Flares will be located at least 100' from the well and storage tanks unless otherwise approved by the division. MOC will conduct AVO inspections as described in 19.15.27.8 E (5) (a) with frequencies specified in 19.15.27.8 E (5) (b) and (c). All emergencies will be resolved as quickly and safely as feasible to minimize waste.
F. The volume of natural gas that is vented or flared as the result of malfunction or emergency during drilling and completions operations will be estimated. The volume of natural gas that is vented, flared or beneficially used during production operations, will be measured or estimated. MOC will install equipment to measure

the volume of natural gas flared from existing process piping or a flowline piped from equipment such as high pressure separators, heater treaters, or vapor recovery units associated with a well or facility associated with a well authorized by an APD issued after May 25, 2021 that has an average daily production greater than 60 Mcf/day. If metering is not practicable due to circumstances such as low flow rate or low pressureventing and flaring, MOC will estimate the volume of vented or flared natural gas. Measuring equipment will conform to industry standards and will not be designed or equipped with a manifold that allows thediversion of natural gas around the metering element except for the sole purpose of inspecting and servicing the measurement equipment.

VIII. For maintenance activities involving production equipment and compression, venting will be limited to the depressurization of the subject equipment to ensure safe working conditions. For maintenance of production and compression equipment the associated producing wells will be shut in to eliminate venting. For maintenance of VRUs all gas normally routed to the VRU will be routed to flare to eliminate venting.

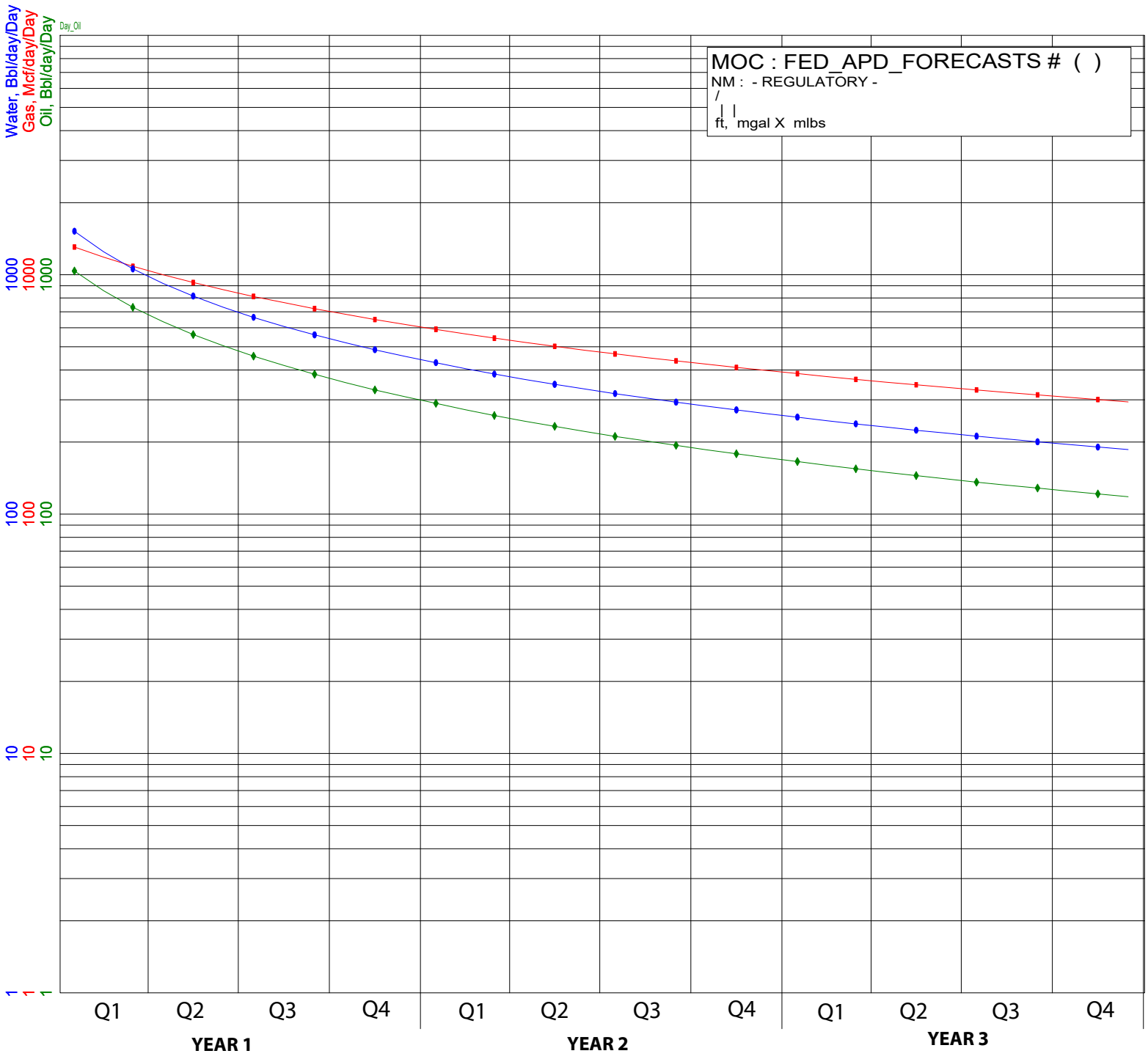

Oil, Bbl/day

Qual=	LEABS2.0
Ref=	1/2025
Cum=	0
Rem=	332092
EUR=	332092
Yrs=	3.000
Qi=	1150.0
b=	0.950000
De=	74.000000
Df=	23.848091
Qab=	116.7

Gas, Mcf/day

Qual=	LEABS2.0
Ref=	1/2025
Cum=	0
Rem=	621833
EUR=	621833
Yrs=	3.000
Qi=	1375.0
b=	1.050000
De=	56.000000
Df=	20.240305
Qab=	291.1

Water, Bbl/d

Qual=	LEABS2.0
Ref=	1/2025
Cum=	0
Rem=	492387
EUR=	492387
Yrs=	3.000
Qi=	1700.0
b=	1.050000
De=	74.000000
Df=	22.172770
Qab=	183.7

Mewbourne Oil Company, Cow Bell 9/4 Fed Com 907H
Sec 9, T19S, R34E
SHL: 260' FSL 1915' FEL (Sec 9)
BHL: 100' FNL 450' FEL (Sec 4)

Well Location **GL: 3821'**

Point	Calls	Leases	Aliquot	Section	Township	Range	County	Lat	Long	TVD	MD
SHL	SHL: 260' FSL & 1915' FEL (Sec 9)	NMNM 142575	SWSE	9	19S	34E	Lea	32.6682285	- 103.5629251	0'	0'
KOP	KOP: 473' FNL & 450' FEL (Sec 16)	L029490005	NENE	16	19S	34E	Lea	32.6662286	- 103.5581624	11,392'	11,574'
FTP	FTP/LP: 100' FSL & 450' FEL (Sec 9)	NMNM 010474	SESE	9	19S	34E	Lea	32.6678032	- 103.5581649	11,965'	12,474'
PPP2	PPP2: 2639' FSL & 447' FEL (Sec 9)	NMNM 0004591	SENE	9	19S	34E	Lea	32.6747793	- 103.5581643	11,938'	15,012'
PPP3	PPP3: 1320' FNL & 445' FEL (Sec 4)	NMNM 009414	NESE	4	19S	34E	Lea	32.6856588	- 103.5581633	11,897'	18,970'
BHL	BHL: 100' FNL & 450' FEL (Sec 4)	NMNM 010474	NENE	4	19S	34E	Lea	32.6966650	- 103.5581622	11,855'	22,975'

GEOLOGY

Formation	Est. Top (TVD)	Lithology	Mineral Resources	Formation	Est. Top (TVD)	Lithology	Mineral Resources
Rustler	1730'	Dolomite/Anhydrite	Usable Water	Bell Canyon			
Salt Top	2040'	Salt	None	Cherry Canyon			
Castile				Manzanita Marker			
Marker Bed 126				Basal Brushy Canyon	7780'	Sandstone	Oil/Natural Gas
Salt Base	3200'	Salt	None	Bone Spring	8020'	Limestone/Shale	Oil/Natural Gas
Yates	3370'	Sandstone	Oil/Natural Gas	1st Bone Spring Carbonate			
Seven Rivers	3940'	Dolomite	Oil/Natural Gas	1st Bone Spring Sand	9420'	Sandstone	Oil/Natural Gas
Queen				2nd Bone Spring Carbonate			
Capitan				2nd Bone Spring Sand	9900'	Sandstone	Oil/Natural Gas
Grayburg	5330'	Dolomite	None	3rd Bone Spring Carbonate			
San Andres				3rd Bone Spring Sand	10520'	Sandstone	Oil/Natural Gas
Yeso				Wolfcamp	10820'	Shale/Sandstone/Limestone	Oil/Natural Gas
Delaware (Lamar)	5860'	Limestone	Oil/Natural Gas	Canyon	**11745'**	Shale/Sandstone/Limestone	Oil/Natural Gas

Casing Program Design A						BLM Minimum Safety Factors	1.125	1.0	1.6 Dry 1.8 Wet	1.6 Dry 1.8 Wet
Casing String	**Hole Diameter (in)**	**Top MD**	**Top TVD**	**Bottom MD**	**Bottom TVD**	**Casing Description**	**SF Collapse**	**SF Burst**	**SF Jt Tension**	**SF Body Tension**
Surface	17.5"	0'	0'	1815'	1815'	13.375" 54.5# J55 STC	1.39	3.36	5.20	8.62
Intermediate	12.25"	0'	0'	3500'	3500'	9.625" 40# J55 LTC	1.39	2.13	3.71	4.50
Production	8.75"	0'	0'	12474'	11965'	7.625" 29.7# HCP110 GBCD	1.18	1.57	2.08	2.54
Liner	6.75"	11574'	11392'	22975'	11855'	5.5" 20# HPP110 Talon	1.55	1.77	2.40	2.81

All casing strings will be tested in accordance with 43 CFR Part 3172. Must have table for contingency casing.

	Y or N
Is casing new? If used, attach certification as required in Onshore Order #1	Y
Is casing API approved? If no, attach casing specification sheet.	Y
Is premium or uncommon casing planned? If yes attach casing specification sheet.	Y
Does the above casing design meet or exceed BLM's minimum standards? If not provide justification (loading assumptions, casing design criteria).	Y
Will the pipe be kept at a minimum 1/3 fluid filled to avoid approaching the collapse pressure rating of the casing?	Y
Is well located within Capitan Reef?	N
If yes, does production casing cement tie back a minimum of 50' above the Reef?	
Is well within the designated 4 string boundary.	N
Is well located in SOPA but not in R-111-Q?	N
If yes, are the first 2 strings cemented to surface and 3rd string cement tied back 500' into previous casing?	
Is well located in R-111-Q and SOPA?	N
If yes, are the first three strings cemented to surface?	
Is 2nd string set 100' to 600' below the base of salt?	
Is an open annulus used to satisfy R-111-Q? If yes, see cement design.	
Is an engineered weak point used to satisfy R-111-Q?	
If yes, at what depth is the weak point planned?	
Is well located in high Cave/Karst?	N
If yes, are there two strings cemented to surface?	
(For 2 string wells) If yes, is there a contingency casing if lost circulation occurs?	
Is well located in critical Cave/Karst?	N
If yes, are there three strings cemented to surface?	

Mewbourne Oil Company, Cow Bell 9/4 Fed Com 907H
Sec 9, T19S, R34E
SHL: 260' FSL 1915' FEL (Sec 9)
BHL: 100' FNL 450' FEL (Sec 4)

Design A - Cement Program

Casing	Cement Stage	# sx	Density (ppg)	Yield (ft^3/sack)	Depth (MD)	Volume (ft^3)	% Excess	Slurry Description
13.375 in	LEAD	1070	12.5	2.12	0' - 1623'	2270	100%	Class C: Salt, Gel, Extender, LCM
	TAIL	200	14.8	1.34	1623' - 1815'	268		Class C: Retarder
9.625 in	LEAD	580	12.5	2.12	0' - 2874'	1230	25%	Class C: Salt, Gel, Extender, LCM
	TAIL	200	14.8	1.34	2874' - 3500'	268		Class C: Retarder
1st Stg 7.625 in	LEAD	290	12.5	2.12	5860' - 10651'	620	25%	Class H: Salt, Gel, Extender, LCM, Defoamer
	TAIL	200	15.6	1.18	10651' - 12474'	236		Class H: Retarder, Fluid Loss, Defoamer
7 5/8" DV Tool @ 5860'								
2nd Stg 7.625 in	LEAD	90	12.5	2.12	3300' - 4833'	200	25%	Class C: Salt, Gel, Extender, LCM, Defoamer
	TAIL	100	14.8	1.34	4833' - 5860'	134		Class C: Retarder, Fluid Loss, Defoamer
5.5 in	LEAD	650	13.5	1.85	11574' - 22975'	1210	25%	Class H: Salt, Gel, Fluid Loss, Retarder, Dispersant, Defoamer, Anti-settling Agent

Pressure Control Equipment

BOP installed and tested before drilling hole (in):	Size (in)	System Rated WP	Type		Tested to:	Rating Depth
12 1/4	13 5/8	5M	Annular	X	3500#	22,975'
		10M	Blind Ram	X	10000#	
			Pipe Ram	X		
			Double Ram			
			Other*			

*Specify if additional ram is utilized.

Equipment: Annular, Pipe Rams, Blind Rams, Other accessories to the BOP equipment will include a Kelly cock and floor safety valve (inside BOP) and choke lines and choke manifold. See attached schematics.

Variance Request: A variance is requested for the use of a flexible choke line from the BOP to the choke manifold. See attached for hydrostatic test chart. Anchors are not required by manufacturer. Variance is requested to use a multi bowl wellhead. Variance is requested to perform break testing according to attached procedure. If a breaktesting variance is approved & incorporated, API Standard 53 will be incorporated and testing annular BOP to 70% of RWP or 100% of MASP, whichever is greater, will be performed.

Testing Procedure: BOP/BOPE will be tested by an independent service company to 250 psi low and the high pressure indicated above per 43 CFR Part 3172 requirements. The System may be upgraded to a higher pressure but still tested to the working pressure listed in the table above. If the system is upgraded all the components installed will be functional and tested. Pipe rams will be operationally checked each 24 hour period. Blind rams will be operationally checked on each trip out of the hole. These checks will be noted on the daily tour sheets.

Y	Formation integrity test will be performed per 43 CFR Part 3172. On Exploratory wells or on that portion of any well approved for a 5M BOPE system or greater, a pressure integrity test of each casing shoe shall be performed. Will be tested in accordance with 43 CFR Part 3172.
Y	Mewbourne Oil Company request a variance to use a 5000 psi annular BOP with a 10,000 psi BOP stack.
Y	A multibowl wellhead is being used. The BOP will be tested per 43 CFR Part 3170 after installation on the surface casing which will cover testing requirements for a maximum of 30 days. If any seal subject to test pressure is broken the system must be tested. •Provide description here: See attached schematic.

Mud Program

Depth (MD)	Mud Wt (ppg)	Mud Type
0' - 1815'	8.4 - 8.6	Fresh Water
1815' - 3500'	10.0 - 10.2	Brine
3500' - 12474'	8.6 - 9.7	Cut-Brine
12474' - 22975'	10.0 - 11.5	OBM

Sufficient mud materials to maintain mud properties and meet minimum lost circulation and weight increase requirements will be kept on location at all times.

What will be used to monitor the loss or gain of fluid?	Pason/PVT/Visual Monitoring

Mewbourne Oil Company, Cow Bell 9/4 Fed Com 907H
Sec 9, T19S, R34E
SHL: 260' FSL 1915' FEL (Sec 9)
BHL: 100' FNL 450' FEL (Sec 4)

Logging and Testing Procedures

Logging, Coring and Testing.	
Y	Will run GR/CNL from KOP (11574') to surface (horizontal well – vertical portion of hole). Stated logs run will be in the Completion Report and submitted to the BLM.
N	No logs are planned based on well control or offset log information. Offset Well:
N	Coring? If yes, explain:

Open & Cased Hole Logs Run In the Well

	Caliper		Cement Bond Log		CNL/FDC
☐	Compensated Densilog	☒	**Compensated Neutron Log**	☐	Computer Generated Log
	Dip Meter Log	☒	**Directional Survey**	☐	Dual Induction/Microresistivity
	Dual Lateral Log/Microspherically Focused	☐	Electric Log		Formation Density Compensated Log
☒	**Gamma Ray Log**	☒	**Measurement While Drilling**		Mud Log/Geological Lithology Log
	Other		Porosity-Resistivity Log		Sidewall Neutron Log
	Sonic Log		Spontaneous Potential Log		Temperature Log

Drilling Conditions

Condition	Specify what type and where?
BH Pressure at deepest TVD	7155 psi
BH Temperature	165
Abnormal Temp, Pressure, or Geologic Hazards	No

Mitigation measure for abnormal conditions. Describe. Lost circulation material/sweeps/mud scavengers in surface hole.
Weighted mud for possible over-pressure in Wolfcamp formation.

Hydrogen Sulfide (H2S) monitors will be installed prior to drilling out the surface shoe. If H2S is detected in concentrations greater than 100 ppm, the operator will comply with the provisions of Onshore Oil and Gas Order #6. If Hydrogen Sulfide is encountered, measured values and formations will be provided to the BLM.

	H2S is present
X	H2S Plan attached

Mewbourne Oil Company, Cow Bell 9/4 Fed Com 907H
Sec 9, T19S, R34E
SHL: 260' FSL 1915' FEL (Sec 9)
BHL: 100' FNL 450' FEL (Sec 4)

Other facets of operation

Mewbourne Oil Company requests approval to implement additional designs as described below &/or in other attachments. BLM will be notified of elected design. Mewbourne Oil Company will not introduce any additives that contain PFAS chemicals in the completion or recompletion of the well.

Offline Cementing Variance: Variance is requested to perform offline cementing according to the attached procedure. **R-111Q:** Mewbourne proposes performing Open Hole Cementing per R-111Q Guidelines if well is in Potash.

Casing Program Design B						BLM Minimum Safety Factors	1.125	1.0	1.6 Dry 1.8 Wet	1.6 Dry 1.8 Wet
Casing String	**Hole Diameter (in)**	**Top MD**	**Top TVD**	**Bottom MD**	**Bottom TVD**	**Casing Description**	**SF Collapse**	**SF Burst**	**SF Jt Tension**	**SF Body Tension**
Surface	17.5"	0'	0'	1815'	1815'	13.375" 54.5# J55 STC	1.39	3.36	5.20	8.62
Intermediate	12.25"	0'	0'	3500'	3500'	9.625" 40# J55 LTC	1.38	2.13	3.71	4.50
Production	8.75"	0'	0'	11574'	11392'	7.625" 29.7# HCP110 GBCD	1.24	1.65	2.24	2.73
Liner	6.75"	11374'	11172'	22975'	11855'	5.5" 20# HPP110 Talon	1.55	1.77	2.36	2.76

All casing strings will be tested in accordance with 43 CFR Part 3172. Must have table for contingency casing.

	Y or N
Is casing new? If used, attach certification as required in Onshore Order #1	Y
Is casing API approved? If no, attach casing specification sheet.	Y
Is premium or uncommon casing planned? If yes attach casing specification sheet.	Y
Does the above casing design meet or exceed BLM's minimum standards? If not provide justification (loading assumptions, casing design criteria).	Y
Will the pipe be kept at a minimum 1/3 fluid filled to avoid approaching the collapse pressure rating of the casing?	Y
Is well located within Capitan Reef?	N
If yes, does production casing cement tie back a minimum of 50' above the Reef?	
Is well within the designated 4 string boundary.	N
Is well located in SOPA but not in R-111-Q?	N
If yes, are the first 2 strings cemented to surface and 3rd string cement tied back 500' into previous casing?	
Is well located in R-111-Q and SOPA?	N
If yes, are the first three strings cemented to surface?	
Is 2nd string set 100' to 600' below the base of salt?	
Is an open annulus used to satisfy R-111-Q? If yes, see cement design.	
Is an engineered weak point used to satisfy R-111-Q?	
If yes, at what depth is the weak point planned?	
Is well located in high Cave/Karst?	N
If yes, are there two strings cemented to surface?	
(For 2 string wells) If yes, is there a contingency casing if lost circulation occurs?	
Is well located in critical Cave/Karst?	N
If yes, are there three strings cemented to surface?	

Design B - Cement Program

Casing	Cement Stage	# sx	Density (ppg)	Yield (ft^3/sack)	Depth (MD)	Volume (ft^3)	% Excess	Slurry Description
13.375 in	LEAD	1070	12.5	2.12	0' - 1623'	2270	100%	Class C: Salt, Gel, Extender, LCM
	TAIL	200	14.8	1.34	1623' - 1815'	268		Class C: Retarder
9.625 in	LEAD	580	12.5	2.12	0' - 2874'	1230	25%	Class C: Salt, Gel, Extender, LCM
	TAIL	200	14.8	1.34	2874' - 3500'	268		Class C: Retarder
1st Stg 7.625 in	LEAD	230	12.5	2.12	5860' - 9717'	490	25%	Class H: Salt, Gel, Extender, LCM, Defoamer
	TAIL	200	15.6	1.18	9717' - 11574'	236		Class H: Retarder, Fluid Loss, Defoamer
7 5/8" DV Tool @ 5860'								
2nd Stg 7.625 in	LEAD	90	12.5	2.12	3300' - 4833'	200	25%	Class C: Salt, Gel, Extender, LCM, Defoamer
	TAIL	100	14.8	1.34	4833' - 5860'	134		Class C: Retarder, Fluid Loss, Defoamer
5.5 in	LEAD	660	13.5	1.85	11374' - 22975'	1230	25%	Class H: Salt, Gel, Fluid Loss, Retarder, Dispersant, Defoamer, Anti-settling Agent

MEWBOURNE OIL COMPANY

Mewbourne Oil Co.

BOP Break Testing Variance

Mewbourne Oil Company requests a variance from the minimum standards for well control equipment testing of 43 CFR 3172 to allow a testing schedule of the blow out preventer (BOP) and blow out prevention equipment (BOPE) along with batch drilling & offline cementing operations. Modern rig upgrades which facilitate pad drilling allow the BOP stack to be moved between wells on a multi-well pad without breaking any BOP stack components apart. Widespread use of these technologies has led to break testing BOPE being endorsed as safe and reliable. American Petroleum Institute (API) best practices are frequently used by regulators to develop their regulations. API Standard 53, *Well Control Equipment Systems for Drilling Wells* (5th Ed., Dec. 2018) Section 5.3.7.1 states "A pressure test of the pressure containing component shall be performed following the disconnection or repair, limited to the affected component."

Procedures

1. Full BOPE test at first installation on the pad.
   - Full BOPE test at least every 21 days.
   - Function test BOP elements per 43 CFR 3172.
   - Contact the BLM if a well control event occurs.
2. After the well section is secured and the well is confirmed to be static, the BOP will be disconnected from the wellhead and walked with the rig to another well on the pad. Two breaks on the BOPE will be made (Fig. 1).
   - Connection between the flex line and the HCR valve
   - Connection between the wellhead and the BOP quick connect (Fig. 5 & 6).
3. A capping flange will be installed after cementing per wellhead vendor procedure & casing pressure will be monitored via wellhead valve.
4. The BOP will be removed and carried by a hydraulic carrier (Fig. 3 & 4).
5. The rig will then walk to the next well.
6. Confirm that the well is static and remove the capping flange.
7. The connection between the flex line and HCR valve and the connection between the wellhead and the BOP quick connect will be reconnected.
8. Install a test plug into the wellhead.
9. A test will then be conducted against the upper pipe rams and choke, testing both breaks (Fig. 1 & 2).
10. The test will be held at 250 psi low and to the high value submitted in the APD, not to exceed 5000 psi.
11. The annular, blind rams and lower pipe rams will then be function tested.
12. If a pad consists of three or more wells, steps 4 through 11 will be repeated.

MEWBOURNE OIL COMPANY

13. A break test will only be conducted if the intermediate section can be drilled and cased within 21 days of the last full BOPE test.

Barriers

Before Nipple Down:

- Floats in casing
- Kill weight fluid in casing
- Kill weight fluid in annulus
- Solid body mandrel and/or packoff

After Nipple Down:

- Floats in casing
- Kill weight fluid in casing
- Kill weight fluid in annulus
- Solid body mandrel and/or packoff
- Offline cementing tool and/or cement head
- Capping flange after cementing

Summary

A variance is requested to only test broken pressure seals on the BOPE when moving between wells on a multi-well pad if the following conditions are met:

- A full BOPE test is conducted on the first well on the pad. API Standard 53 requires testing annular BOP to 70% of RWP or 100% of MASP, whichever is greater.
- If the first well on the pad is not the well with the deepest intermediate section, a full BOPE test will also be performed when moving to a deeper well.
- The hole section being drilled has a MASP under 5000 psi.
- If a well control event occurs, Mewbourne will contact BLM for permission to continue break testing.
- If significant (>50%) losses occur, full BOPE testing will be required going forward.
- Full BOPE test will be required prior to drilling the production hole.

While walking the rig, the BOP stack will be secured via hydraulic winch or hydraulic carrier. A full BOPE test will be performed at least every 21 days.

MEWBOURNE
OIL COMPANY

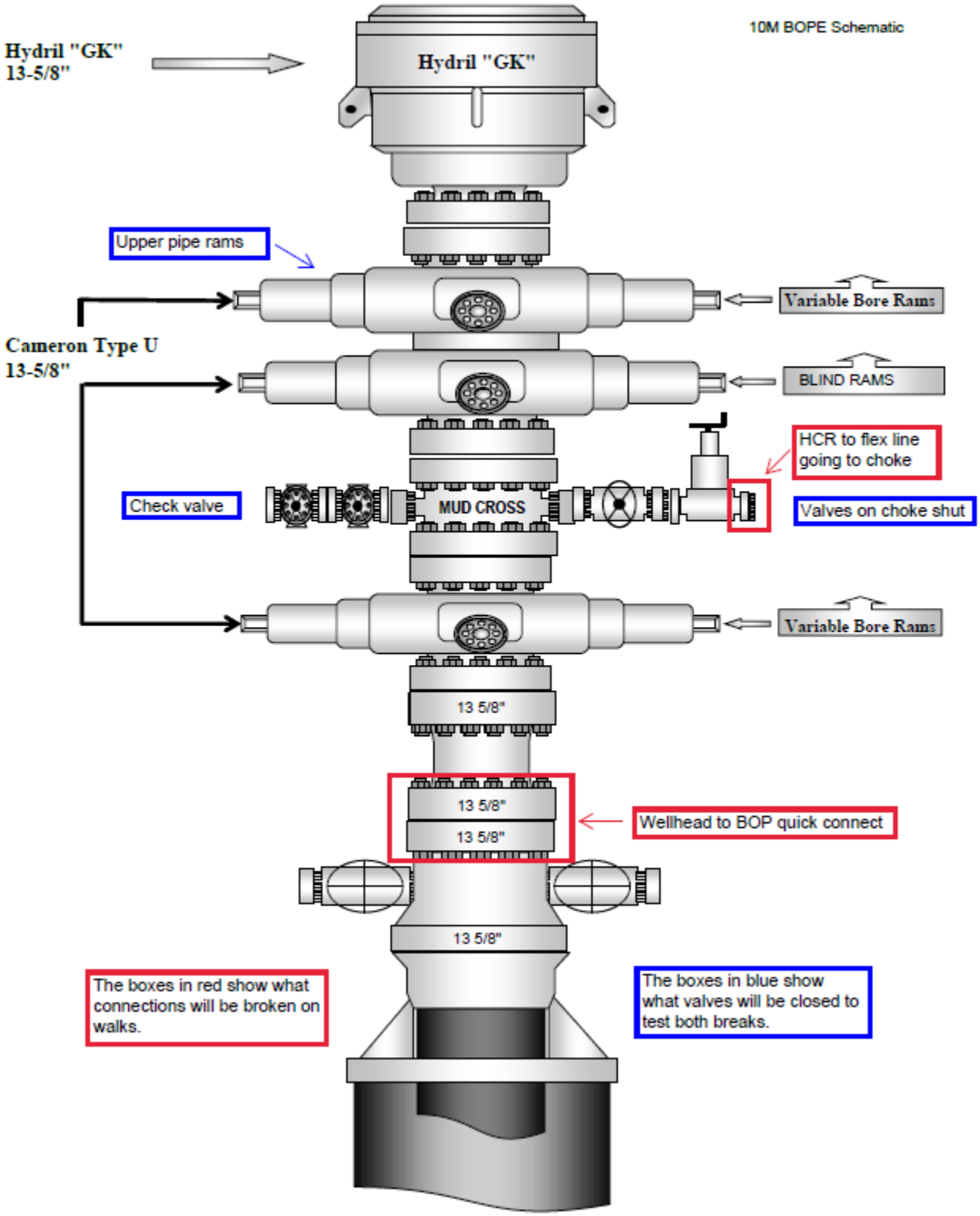

Figure 1. BOP diagram

MEWBOURNE OIL COMPANY

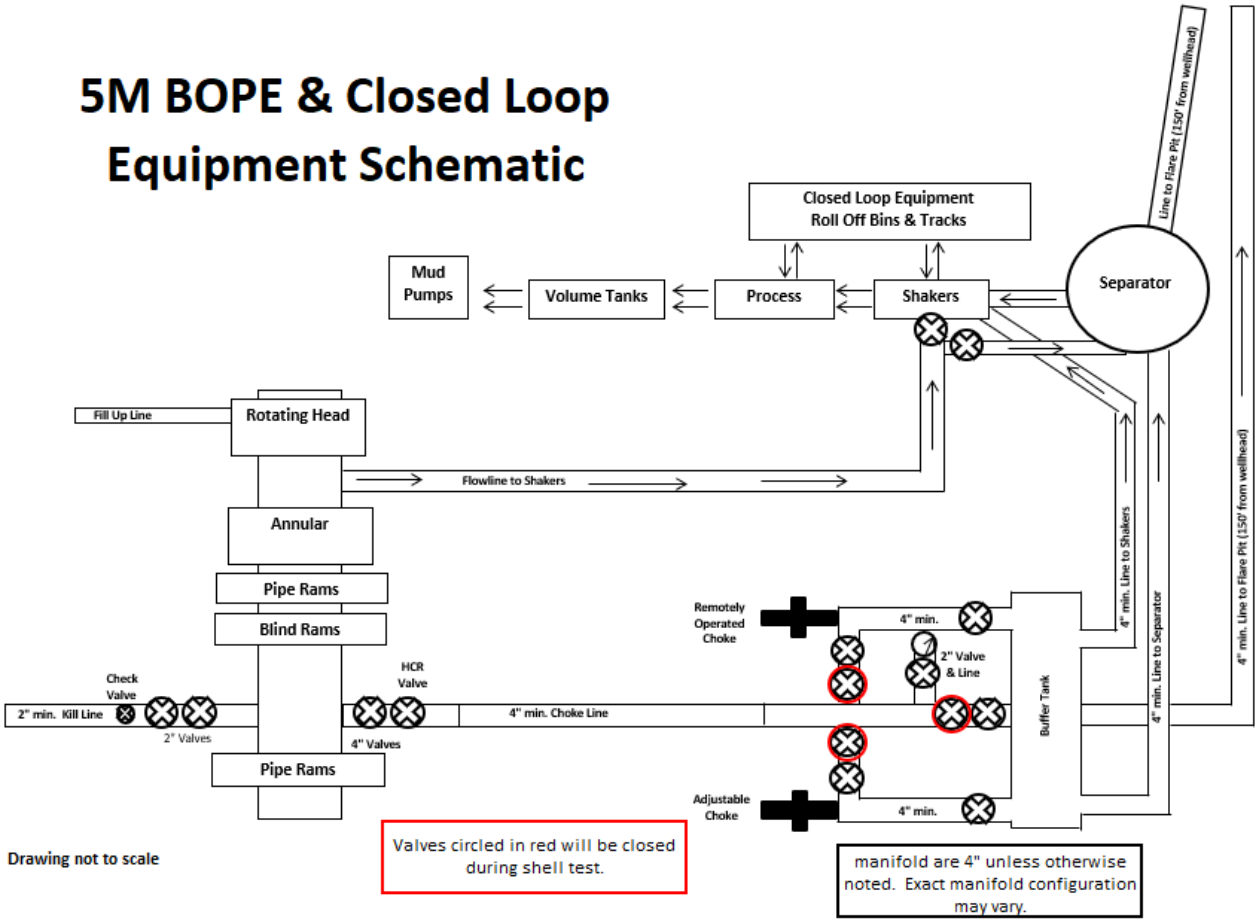

Figure 2. BOPE diagram

MEWBOURNE
OIL COMPANY



Figure 3. BOP handling system

MEWBOURNE
OIL COMPANY



Figure 4. BOP handling system

MEWBOURNE
OIL COMPANY

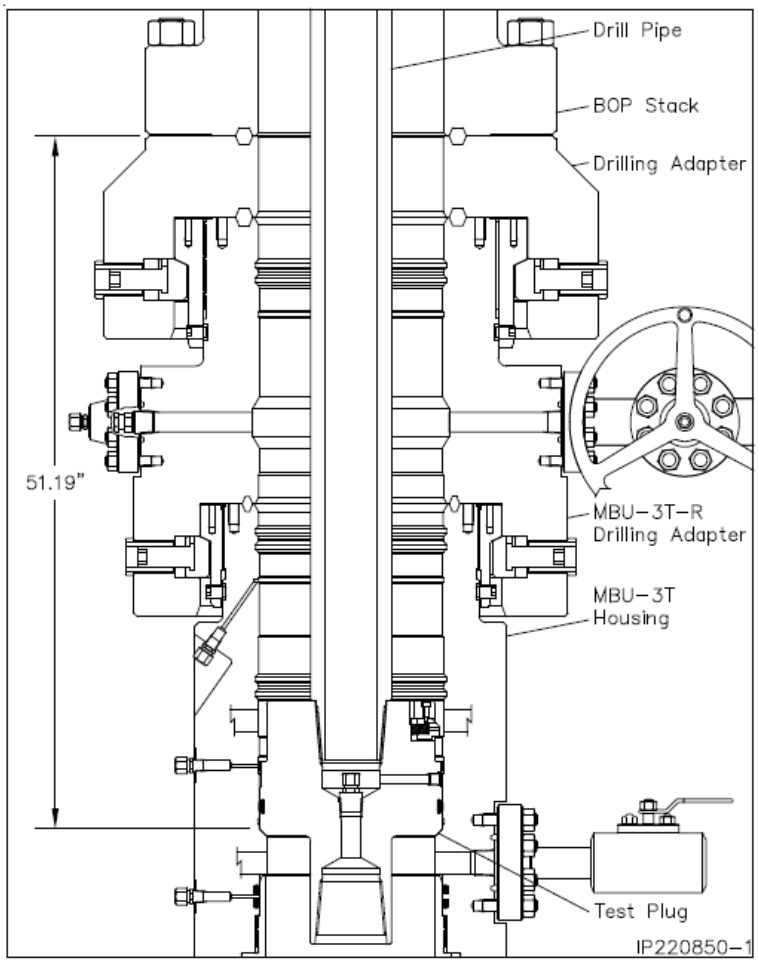

Figure 5. Cactus 5M wellhead with BOP quick connect

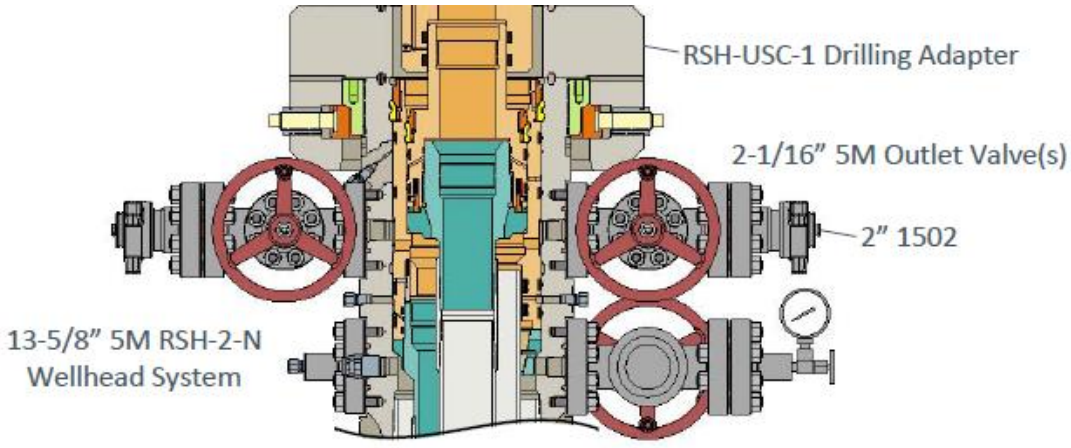

Figure 6. Vault 5M wellhead with BOP quick connect

MEWBOURNE OIL COMPANY

Mewbourne Oil Co.

Surface & Intermediate Offline Cementing Variance

Mewbourne Oil Company requests a variance to perform offline cementing for surface and intermediate casing strings with the following conditions:

- Offline cementing will not be performed on production casing.
- Offline cementing will not be performed on a hole section with MASP > 5000 psi.
- Offline cementing will not be performed concurrently with offset drilling.

Surface Casing Order of Operations:

1. Run 13 3/8" surface casing as per normal operations (TPGS and float collar).
2. Perform negative pressure test to confirm integrity of float equipment while running casing.
3. Confirm well is static.
4. Make up 13 ⅝" wellhead or wellhead landing ring assembly and land on 20" conductor.
5. Fill pipe, circulate casing capacity and confirm float(s) are still holding.
6. Confirm well is static.
7. Back out landing joint and pull to rig floor. Lay down landing joint.
8. Walk rig to next well on pad with cement crew standing by to rig up.
9. Make up offline cement tool with forklift per wellhead manufacturer (Fig. 1 & 2).
10. Make up cement head on top of offline cement tool with forklift.
11. Commence cement operations.
12. If cement circulates, confirm well is static and proceed to step 16.
13. If cement does not circulate, notify the appropriate BLM office, wait a minimum of six hours, and run a temperature survey to determine the top of cement.
14. Use 1" pipe for remedial cement job until the surface casing is cemented to surface.
15. Confirm well is static.
16. Once cement job is complete, the cement head and offline cementing tool are removed. The wellhead technician returns to cellar to install wellhead/valves.
17. Install wellhead capping flange.

Barriers

Before Walk:

- Float(s) in casing
- Kill weight fluid in casing
- Kill weight fluid in annulus

MEWBOURNE
OIL COMPANY

After Walk:

- Float(s) in casing
- Kill weight fluid in casing
- Kill weight fluid in annulus
- Offline cementing tool tested to 5000 psi and cement head
- Capping flange after cementing

20” Surface Casing Order of Operations (4 string area):

1. Run 20" surface casing as per normal operations (TPGS and float collar).
2. Perform negative pressure test to confirm integrity of float equipment while running casing.
3. Fill pipe, circulate casing capacity and confirm float(s) are still holding.
4. Confirm well is static.
5. Back out landing joint and pull to rig floor. Lay down landing joint.
6. Make up cement head.
7. Walk rig to next well on pad with cement crew standing by to rig up.
8. Commence cement operations.
9. If cement circulates, confirm well is static and proceed to step 13.
10. If cement does not circulate, notify the appropriate BLM office, wait a minimum of six hours, and run a temperature survey to determine the top of cement.
11. Use 1" pipe for remedial cement job until the surface casing is cemented to surface.
12. Confirm well is static.
13. Once cement job is complete, remove cement head and install cap.

Barriers

Before Walk:

- Float(s) in casing
- Kill weight fluid in casing
- Kill weight fluid in annulus
- Cement Head

After Walk:

- Float(s) in casing
- Kill weight fluid in casing
- Kill weight fluid in annulus
- Cement head
- Capping flange after cementing

MEWBOURNE
OIL COMPANY

Intermediate Casing Order of Operations:

1. Run casing as per normal operations (float shoe and float collar).
2. Perform negative pressure test to confirm integrity of float equipment while running casing.
3. Confirm well is static (if running SBM).
4. Land casing.
5. Fill pipe, circulate casing capacity and confirm floats are still holding.
6. Confirm well is static.
7. Back out landing joint and pull to rig floor. Lay down landing joint. Install packoff & test.
8. Nipple down BOP.
9. Walk rig to next well on pad with cement crew standing by to rig up.
10. Make up offline cement tool using forklift per wellhead manufacturer (Fig. 3 - 8).
11. Make up cement head on top of offline cement tool.
12. Commence cement operations.
13. If cement circulates, confirm well is static and proceed to step 16.
14. If cement does not circulate (when required), notify the appropriate BLM office, wait a minimum of six hours, and run a temperature survey to determine the top of cement.
15. Pump remedial cement job if required.
16. Confirm well is static.
17. Remove cement head and offline cementing tool.
18. Install wellhead capping flange and test.

Barriers

Before Nipple Down:

- Floats in casing
- Kill weight fluid in casing
- Kill weight fluid in annulus
- Solid body mandrel and/or packoff

After Nipple Down:

- Floats in casing
- Kill weight fluid in casing
- Kill weight fluid in annulus
- Solid body mandrel and/or packoff
- Offline cementing tool tested to 5000 psi and cement head
- Capping flange after cementing

MEWBOURNE OIL COMPANY

Risks:

- Pressure build up in annulus before cementing
  - Contact BLM if a well control event occurs.
  - Rig up 3rd party pump or rig pumps to pump down casing and kill well.
  - Returns will be taken through the wellhead valves to a choke manifold (Fig 9 & 10).
  - Well could also be killed through the wellhead valves down the annulus.

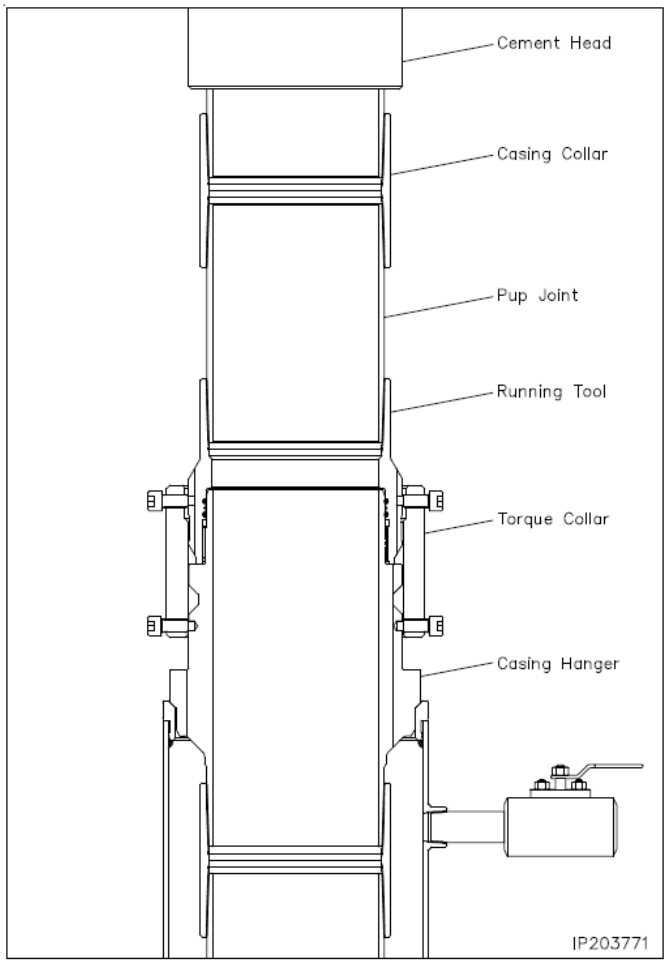

Figure 1. Cactus 13 3/8" 5M offline cementing tool. Pressure rating limited by the lesser of 5M tool rating or the 13 3/8" pup joint and casing.

MEWBOURNE
OIL COMPANY

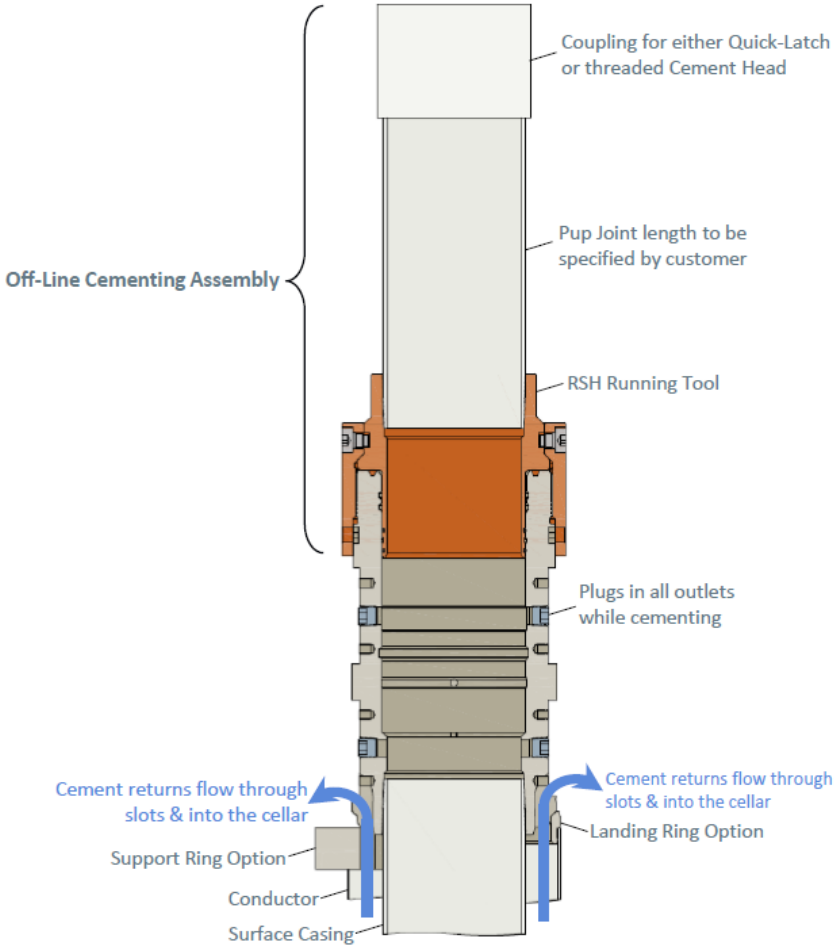

Figure 2. Vault 13 3/8” 5M offline cementing tool. Pressure rating limited by the lesser of 5M tool rating or the 13 3/8” pup joint and casing.

MEWBOURNE
OIL COMPANY

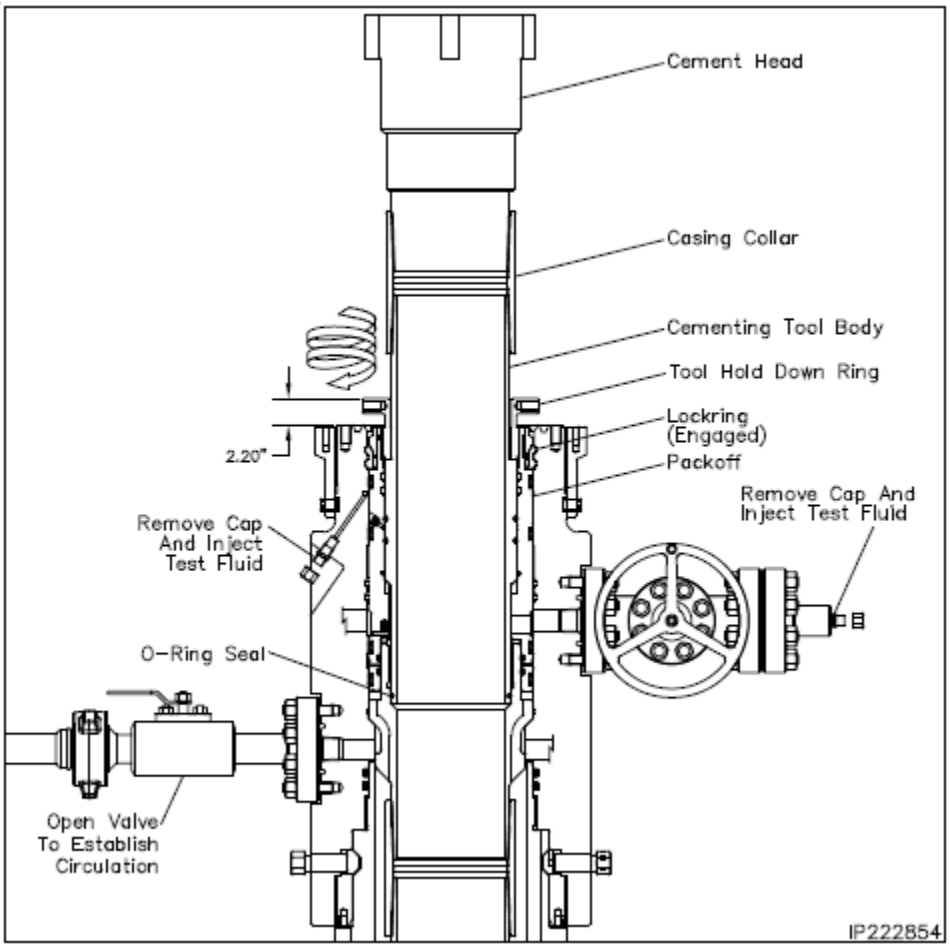

Figure 3. Cactus 9 5/8" 5M offline cementing tool. Pressure rating limited by the lesser of 5M tool rating or the 9 5/8" pup joint and casing.

MEWBOURNE OIL COMPANY

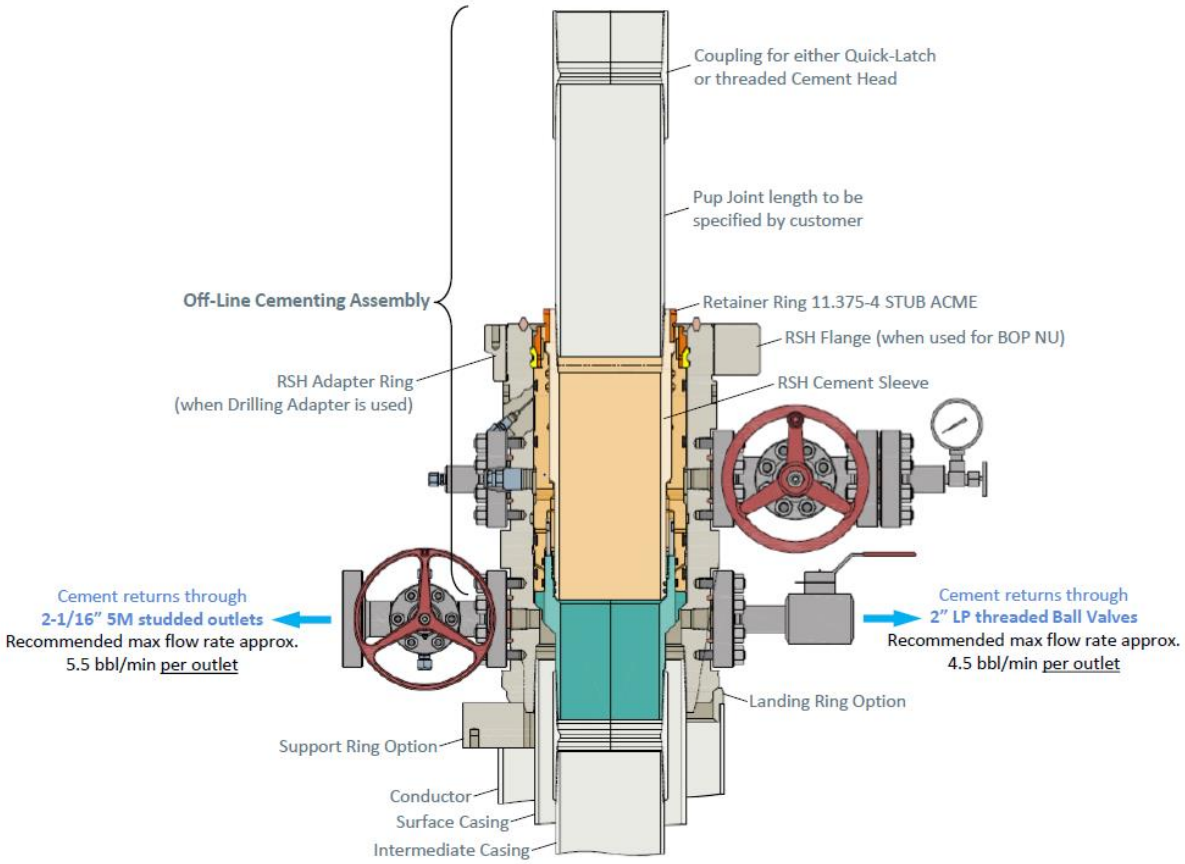

Figure 4. Vault 9 5/8" 5M offline cementing tool. Pressure rating limited by the lesser of 5M tool rating or the 9 5/8" pup joint and casing.

MEWBOURNE
OIL COMPANY

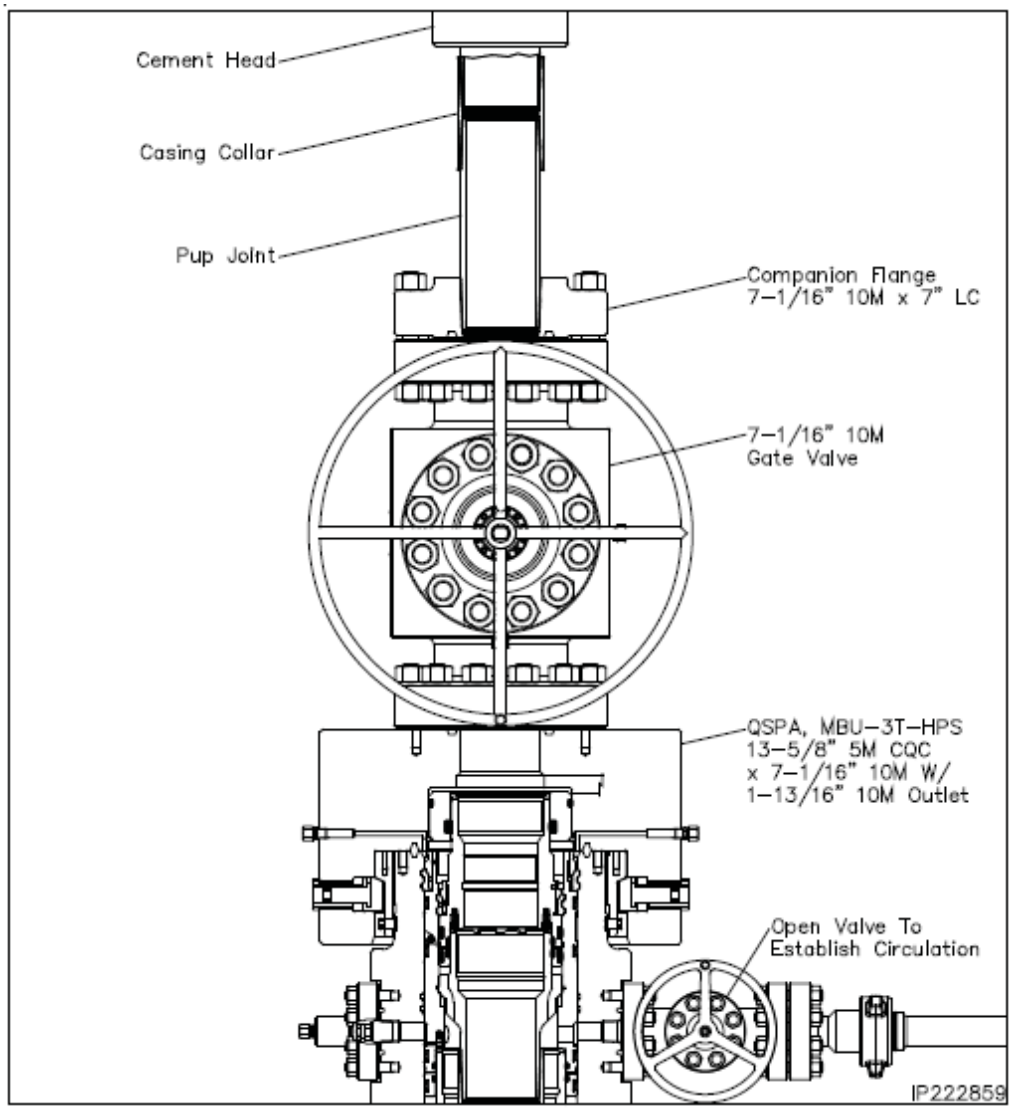

Figure 5. Cactus 7” 5M offline cementing tool. Pressure rating limited by the lesser of 5M tool rating or the 7” pup joint and casing.

MEWBOURNE
OIL COMPANY

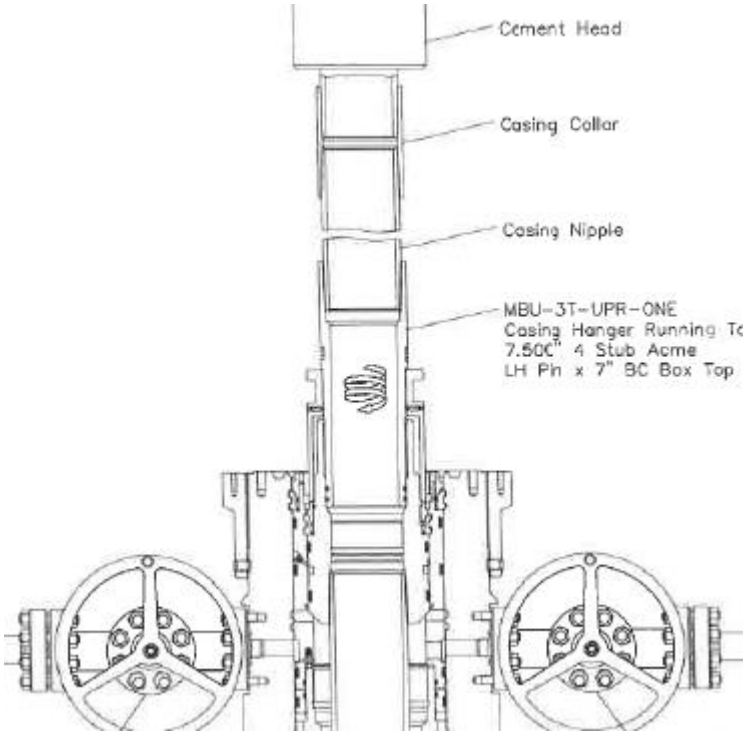

Figure 6. Cactus 7” 5M offline cementing tool. Pressure rating limited by the lesser of 5M tool rating or the 7” pup joint and casing.

MEWBOURNE OIL COMPANY

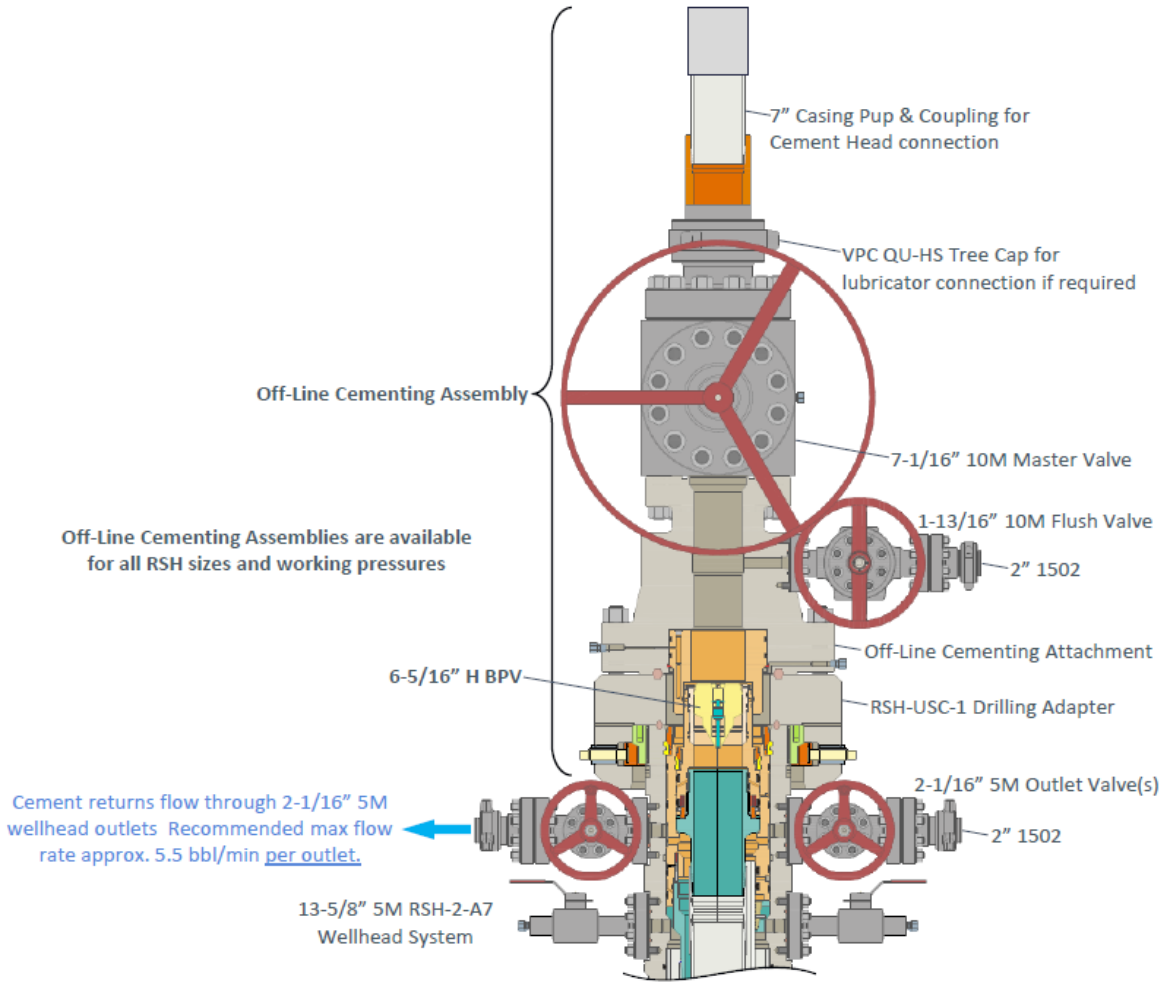

Figure 7. Vault 7" 5M offline cementing tool. Pressure rating limited by the lesser of 5M tool rating or the 7" pup joint and casing.

MEWBOURNE
OIL COMPANY

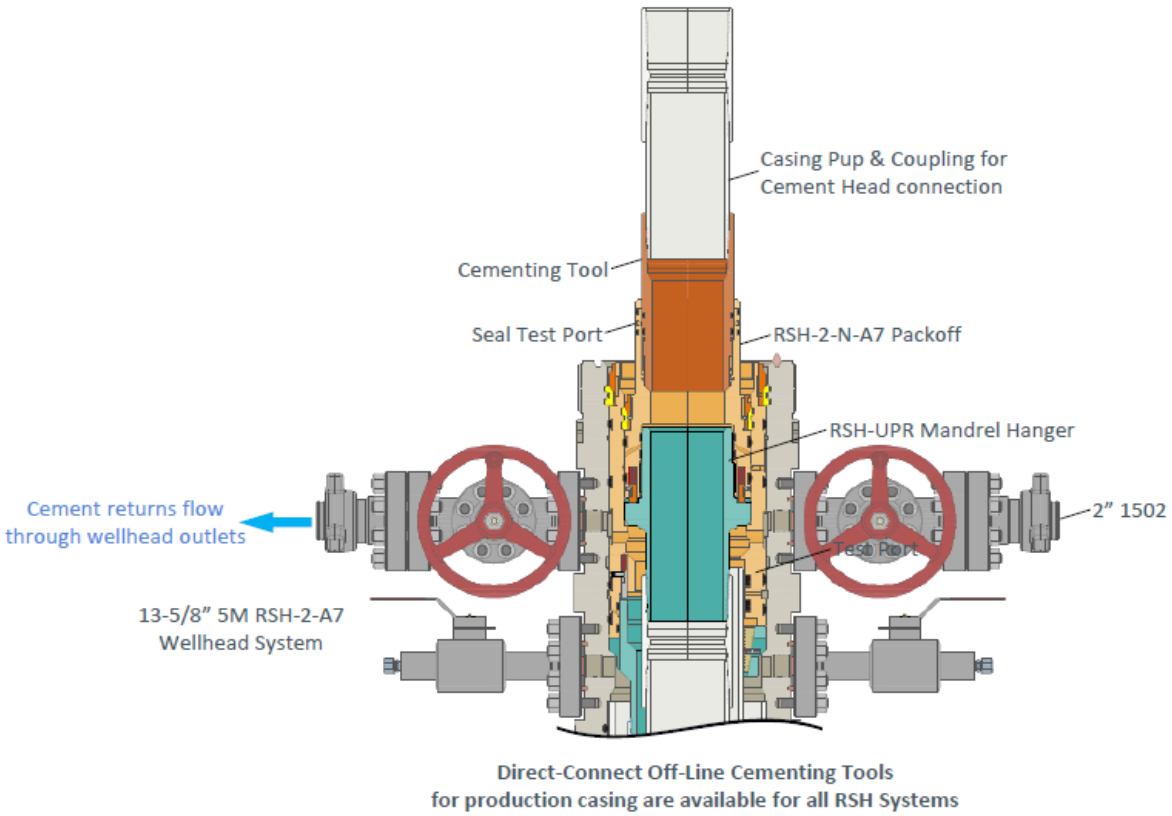

Figure 8. Vault 7" 5M offline cementing tool. Pressure rating limited by the lesser of 5M tool rating or the 7" pup joint and casing.

MEWBOURNE
OIL COMPANY

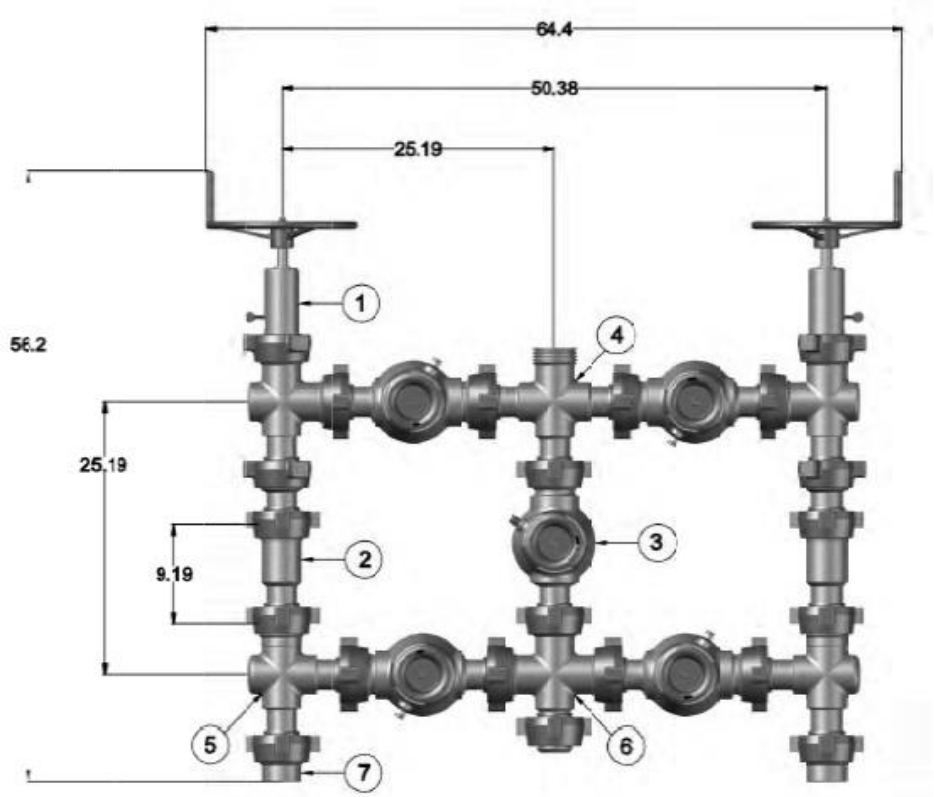

Figure 9. Five valve 15k choke manifold.

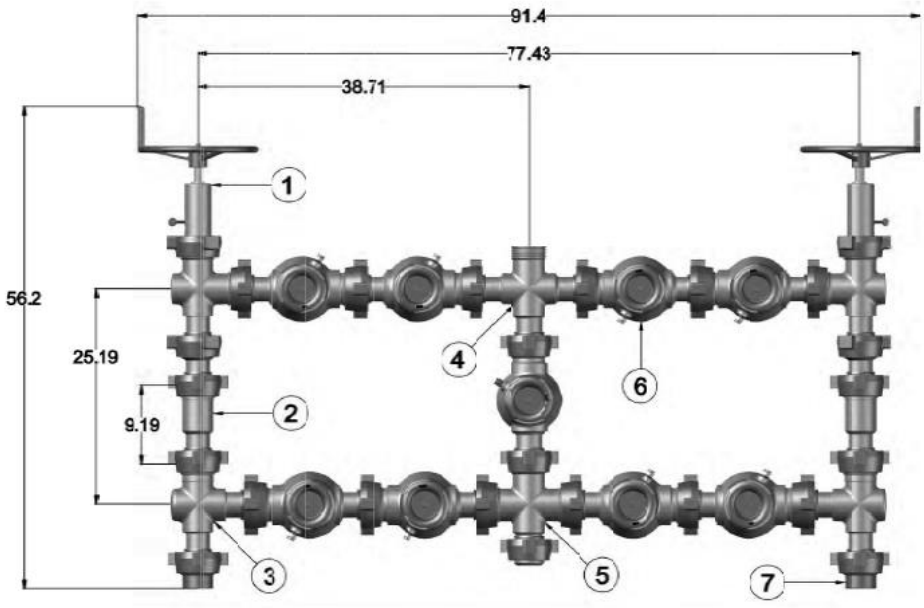

Figure 10. Nine valve 15k choke manifold.

AFMSS
U.S. Department of the Interior
BUREAU OF LAND MANAGEMENT

SUPO Data Report
11/09/2026

APD ID: 10400113693
Submission Date: 09/03/2026
Operator Name: MEWBOURNE OIL COMPANY
Well Name: COW BELL 9/4 FED COM
Well Number: 907H
Well Type: OIL WELL
Well Work Type: Drill

Highlighted data reflects the most recent changes
Show Final Text

Section 1 - Existing Roads

Will existing roads be used? YES

Existing Road Map:

Existing_Road_Map_20260811100005.pdf

Existing Road Purpose: ACCESS,FLUID TRANSPORT

Row(s) Exist? NO

ROW ID(s)

ID:

Do the existing roads need to be improved? NO

Existing Road Improvement Description:

Existing Road Improvement Attachment:

Section 2 - New or Reconstructed Access Roads

Will new roads be needed? YES

New Road Map:

New_Road_Map_20260811100020.pdf

New road type: RESOURCE

Length: 274.08 Feet **Width (ft.):** 30

Max slope (%): 3 **Max grade (%):** 3

Army Corp of Engineers (ACOE) permit required? N

ACOE Permit Number(s):

New road travel width: 14

New road access erosion control: NA

New road access plan or profile prepared? N

New road access plan

Operator Name: MEWBOURNE OIL COMPANY

Well Name: COW BELL 9/4 FED COM **Well Number:** 907H

Access road engineering design? N

Access road engineering design

Turnout? N

Access surfacing type: GRAVEL

Access topsoil source: OFFSITE

Access surfacing type description:

Access onsite topsoil source depth:

Offsite topsoil source description: NA

Onsite topsoil removal process:

Access other construction information: NA

Access miscellaneous information: NA

Number of access turnouts:

Access turnout map:

Drainage Control

New road drainage crossing: OTHER

Other Description: NA

Drainage Control comments: NA

Road Drainage Control Structures (DCS) description: NA

Road Drainage Control Structures (DCS) attachment:

Access Additional Attachments

Section 3 - Location of Existing Wells

Existing Wells Map? YES

Existing Well map Attachment:

Existing_Well_Map_20260811100047.pdf

Section 4 - Location of Existing and/or Proposed Production Facilities

Submit or defer a Proposed Production Facilities plan? SUBMIT

Production Facilities description: Battery is in the SESE of S9 of T19S R34E. We will lay 3 - 4in & 1- 8in buried FlexSteel flow lines with working pressure of 250# (approx. 625), 1 - 4in buried poly gas supply line with working pressure of 150# (approx. 625), 1 - 2in buried poly air supply line with working pressure of 150# (approx. 625) & 1 - 4.5in buried steel gas line for gas lift purposes with working pressure of 1200# (approx. 625). These lines will be installed in one ditch, going back to the Cow Bell 9/4 Battery 1. An overhead electric line is installed 15 of the flowline route (approx. 625 & up to 22900 volts)

Operator Name: MEWBOURNE OIL COMPANY

Well Name: COW BELL 9/4 FED COM **Well Number:** 907H

Production Facilities map:

Production_Facility_Map_20260811150852.pdf

Section 5 - Location and Types of Water Supply

Water Source Table

Water source type: IRRIGATION

Water source use type: DUST CONTROL
CAMP USE
SURFACE CASING
INTERMEDIATE/PRODUCTION CASING
STIMULATION

Source latitude: 32.093172 **Source longitude:** -103.736026

Source datum: NAD83

City:

Water source permit type: WATER WELL

Water source transport method: TRUCKING

Source land ownership: PRIVATE

Source transportation land ownership: STATE

Water source volume (barrels): 1940 **Source volume (acre-feet):** 0.2500526

Source volume (gal): 81480

Water source and transportation

Water_Source_Trans_Map_20260811100100.pdf

Water source comments: LAT: 32.668618 LONG: -1033.552350

New water well? N

New Water Well Info

Well latitude: **Well Longitude:** **Well datum:**

Well target aquifer:

Est. depth to top of aquifer(ft): **Est thickness of aquifer:**

Aquifer comments:

Aquifer documentation:

Operator Name: MEWBOURNE OIL COMPANY

Well Name: COW BELL 9/4 FED COM **Well Number:** 907H

Well depth (ft):

Well casing type:

Well casing outside diameter (in.):

Well casing inside diameter (in.):

New water well casing?

Used casing source:

Drilling method:

Drill material:

Grout material:

Grout depth:

Casing length (ft.):

Casing top depth (ft.):

Well Production type:

Completion Method:

Water well additional information:

State appropriation permit:

Additional information attachment:

Section 6 - Construction Materials

Using any construction materials: YES

Construction Materials description: SENE SEC 16 19S 34E LAT: 32.660510 LONG: -1033.560576

Construction Materials source location

Caliche_Source_Trans_Map_20260811100205.pdf

Section 7 - Methods for Handling

Waste type: SEWAGE

Waste content description: Human waste & grey water

Amount of waste: 1500 gallons

Waste disposal frequency : Weekly

Safe containment description: 2,000 gallon plastic container

Safe containmant attachment:

Waste disposal type: HAUL TO COMMERCIAL FACILITY **Disposal location ownership:** PRIVATE

Disposal type description:

Disposal location description: City of Carlsbad Water Treatment facility

Waste type: DRILLING

Waste content description: DRILL CUTTINGS

Amount of waste: 940 barrels

Waste disposal frequency : One Time Only

Safe containment description: DRILL CUTTINGS WILL BE PROPERLY CONTAINED IN STEEL TANKS (20 YARD ROLL OFF BINS.)

Safe containmant attachment:

Operator Name: MEWBOURNE OIL COMPANY

Well Name: COW BELL 9/4 FED COM **Well Number:** 907H

Waste disposal type: HAUL TO COMMERCIAL FACILITY **Disposal location ownership:** PRIVATE

Disposal type description:

Disposal location description: NMOCD approved waste disposal locations are CRI or Lea Land, both facilities are located on HWY 62/180, Sec 27, T20S, R32E

Waste type: GARBAGE

Waste content description: Garbage & Trash

Amount of waste: 1500 pounds

Waste disposal frequency : One Time Only

Safe containment description: Enclosed trash trailer

Safe containmant attachment:

Waste disposal type: HAUL TO COMMERCIAL FACILITY **Disposal location ownership:** PRIVATE

Disposal type description:

Disposal location description: Waste Management facility in Carlsbad.

Reserve Pit

Reserve Pit being used? NO

Temporary disposal of produced water into reserve pit? NO

Reserve pit length (ft.) **Reserve pit width (ft.)**

Reserve pit depth (ft.) **Reserve pit volume (cu. yd.)**

Is at least 50% of the reserve pit in cut?

Reserve pit liner

Reserve pit liner specifications and installation description

Cuttings Area

Cuttings Area being used? NO

Are you storing cuttings on location? N

Description of cuttings location

Cuttings area length (ft.) **Cuttings area width (ft.)**

Cuttings area depth (ft.) **Cuttings area volume (cu. yd.)**

Is at least 50% of the cuttings area in cut?

Cuttings area liner

Cuttings area liner specifications and installation description

Operator Name: MEWBOURNE OIL COMPANY

Well Name: COW BELL 9/4 FED COM **Well Number:** 907H

Section 8 - Ancillary

Are you requesting any Ancillary Facilities?: N

Ancillary Facilities

Comments:

Section 9 - Well Site

Well Site Layout Diagram:

Well_Site_Layout_20260811100221.pdf

Comments: NONE

Section 10 - Plans for Surface

Type of disturbance: New Surface Disturbance

Multiple Well Pad Name: Cow Bell 9/4 Fed Com 315 407 905 907

Multiple Well Pad Number: 4

Recontouring

Interim_Reclamation_Map_20260811100232.pdf

Drainage/Erosion control construction: NONE

Drainage/Erosion control reclamation: NONE

Well pad proposed disturbance (acres): 4.22	**Well pad interim reclamation (acres):** 1.1	**Well pad long term disturbance (acres):** 3.12
Road proposed disturbance (acres): 0.972	**Road interim reclamation (acres):** 0	**Road long term disturbance (acres):** 0
Powerline proposed disturbance (acres): 0	**Powerline interim reclamation (acres):** 0	**Powerline long term disturbance (acres):** 0
Pipeline proposed disturbance (acres): 0	**Pipeline interim reclamation (acres):** 0	**Pipeline long term disturbance (acres):** 0
Other proposed disturbance (acres): 0	**Other interim reclamation (acres):** 0	**Other long term disturbance (acres):** 0
Total proposed disturbance: 5.192	**Total interim reclamation:** 1.1	**Total long term disturbance:** 3.12

Disturbance Comments: In areas to be heavily disturbed, the top 6 inches of soil material, will be stripped and stockpiled on the perimeter of the well location to keep topsoil viable, and to make redistribution of topsoil more efficient during interim reclamation. Stockpiled topsoil should include vegetative material. Topsoil will be clearly segregated and stored separately from subsoils. Contaminated soil will not be stockpiled, but properly treated and handled prior to topsoil salvaging.

Reconstruction method: The areas planned for interim reclamation will then be recontoured to the original contour if feasible, or if not feasible, to an interim contour that blends with the surrounding topography as much as possible. Where applicable, the fill material of the well pad will be backfilled into the cut to bring the area back to the original contour. The interim cut and fill slopes prior to re-seeding will not be steeper than a 3:1 ration, unless the adjacent native topography is steeper. Note: Constructed slopes may be much steeper

Operator Name: MEWBOURNE OIL COMPANY

Well Name: COW BELL 9/4 FED COM **Well Number:** 907H

during drilling, but will be recontoured to the above ratios during interim reclamation.

Topsoil redistribution: Topsoil will be evenly respread and aggressively revegetated over the entire disturbed area not needed for all-weather operations including cuts & fills. To see the area, the proper BLM seed mixture, free of noxious weeks, will be used.

Soil treatment: N/A

Existing Vegetation at the well pad: VARIOUS BRUSH & GRASSES

Existing Vegetation at the well pad

Existing Vegetation Community at the road: VARIOUS BRUSH & GRASSES

Existing Vegetation Community at the road

Existing Vegetation Community at the pipeline: none

Existing Vegetation Community at the pipeline

Existing Vegetation Community at other disturbances: none

Existing Vegetation Community at other disturbances

Non native seed used? N

Non native seed description:

Seedling transplant description:

Will seedlings be transplanted for this project? N

Seedling transplant description attachment:

Will seed be harvested for use in site reclamation? N

Seed harvest description:

Seed harvest description attachment:

Seed

Seed Table

Seed Summary

Total pounds/Acre:

Seed Type	Pounds/Acre

Seed reclamation

Operator Contact/Responsible Official

Operator Name: MEWBOURNE OIL COMPANY

Well Name: COW BELL 9/4 FED COM **Well Number:** 907H

First Name: **Last Name:**

Phone: **Email:**

Seedbed prep: Final seedbed preparation will consist of contour cultivating to the depth of 4 to 6 inches within 24 hours prior to seeding, dozer tracking, or other imprinting in order to break the soil crust and create seed germination micro-sites.

Seed BMP: To seed the area, the proper BLM seed mixture, free of noxious weeds, will be used.

Seed method: Drilling or broadcasting seed over entire reclaimed area.

Existing invasive species? N

Existing invasive species treatment description:

Existing invasive species treatment

Weed treatment plan description: N/A

Weed treatment plan

Monitoring plan description: vii. All reclaimed areas will be monitored periodically to ensure that revegetation occurs, that the area is not redisturbed, and that erosion and invasive/noxious weeks are controlled.

Monitoring plan

Success standards: regrowth within 1 full growing season of reclamation.

Pit closure description: NA

Pit closure attachment:

Section 11 - Surface

Disturbance type: NEW ACCESS ROAD

Describe:

Surface Owner: BUREAU OF LAND MANAGEMENT

Other surface owner description:

BIA Local Office:

BOR Local Office:

COE Local Office:

DOD Local Office:

NPS Local Office:

State Local Office:

Military Local Office:

USFWS Local Office:

Other Local Office:

USFS Region:

USFS Forest/Grassland: **USFS Ranger District:**

Operator Name: MEWBOURNE OIL COMPANY

Well Name: COW BELL 9/4 FED COM **Well Number:** 907H

Disturbance type: WELL PAD

Describe:

Surface Owner: BUREAU OF LAND MANAGEMENT

Other surface owner description:

BIA Local Office:

BOR Local Office:

COE Local Office:

DOD Local Office:

NPS Local Office:

State Local Office:

Military Local Office:

USFWS Local Office:

Other Local Office:

USFS Region:

USFS Forest/Grassland: **USFS Ranger District:**

Disturbance type: EXISTING ACCESS ROAD

Describe:

Surface Owner: BUREAU OF LAND MANAGEMENT

Other surface owner description:

BIA Local Office:

BOR Local Office:

COE Local Office:

DOD Local Office:

NPS Local Office:

State Local Office:

Military Local Office:

USFWS Local Office:

Other Local Office:

USFS Region:

USFS Forest/Grassland: **USFS Ranger District:**

Operator Name: MEWBOURNE OIL COMPANY

Well Name: COW BELL 9/4 FED COM **Well Number:** 907H

Section 12 - Other

Right of Way needed? N **Use APD as ROW?**

ROW Type(s):

ROW

SUPO Additional Information: Met w/RRC Surveying & re-staked location due to land issues @ 468' FSL & 934' FEL, Sec 9, T19S, R34E, Lea Co., NM. (Elevation @ 3835'). Pad is 460' x 600' w/battery to the NE on pad. Reclaim 60' S & E. Access road will be on SW corner heading SW to MOC lease road. Will need BLM onsite & arch survey. Lat:32.6688098, Long.: -103.559738 NAD83. (BPS)
Use a previously conducted onsite? N

Previous Onsite information:

Other SUPO

VICINITY MAP

NOT TO SCALE

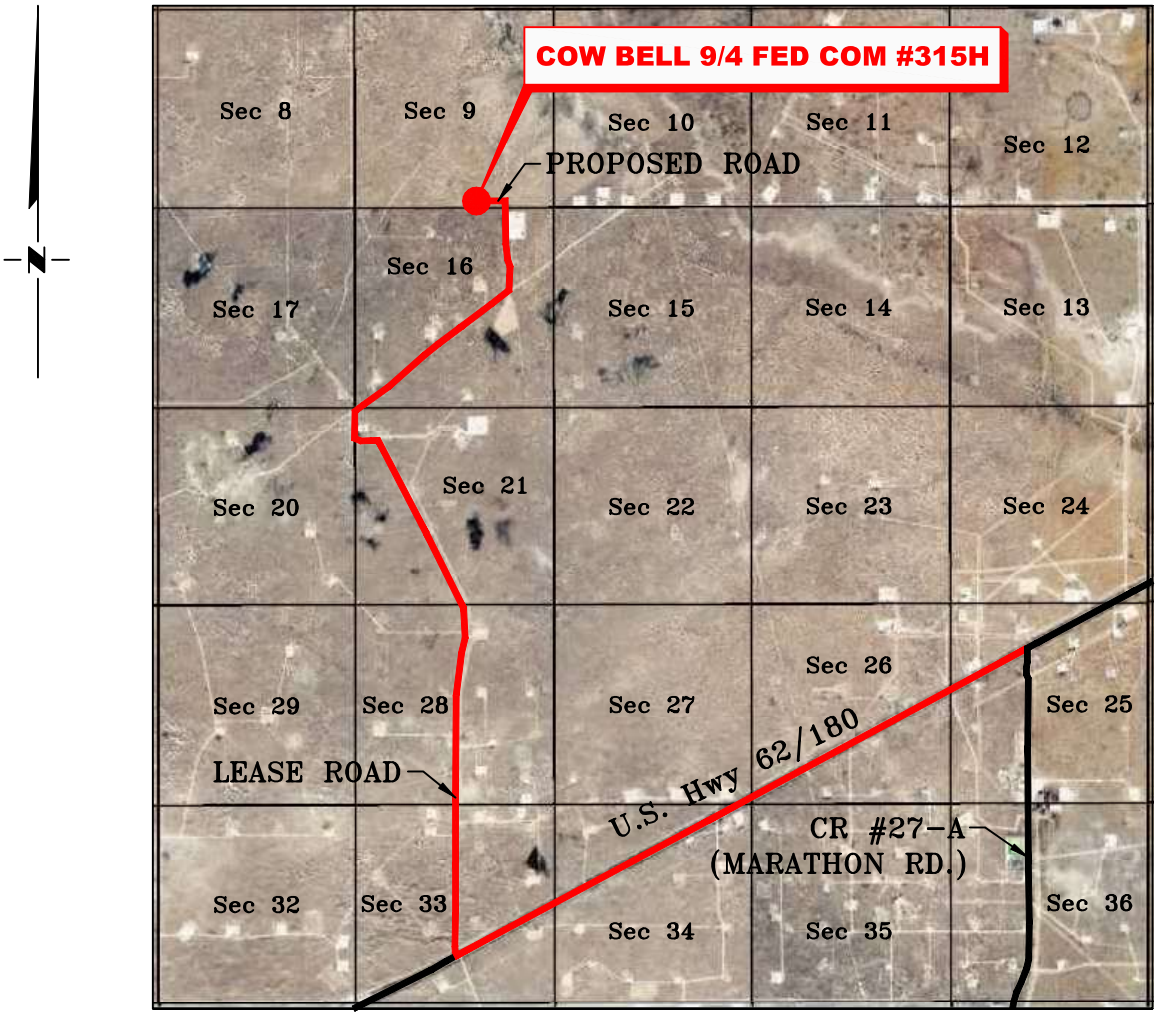

SECTION 9, TWP. 19 SOUTH, RGE. 34 EAST,
N. M. P. M., LEA CO., NEW MEXICO

OPERATOR: Mewbourne Oil Company
LEASE: Cow Bell 9/4 Fed Com
WELL NO.: 315H

LOCATION: 210' FSL & 1955' FEL
ELEVATION: 3822'

NO.	REVISION	DATE

JOB NO.: LS26060443
DWG. NO.: 26060443-4

RRC ENERGY SERVICES, LLC.
701 S. CECIL ST., HOBBS, NM 88240 (575) 964-8200

SCALE: N. T. S.
DATE: 06/04/2026
SURVEYED BY: ML/AR/ZL
DRAWN BY: AR
APPROVED BY: RMH
SHEET: 1 OF 1

Copyright 2016 – All Rights Reserved

MEWBOURNE OIL COMPANY
COW BELL 9/4 FED COM – ACCESS ROAD
SECTION 9, T19S, R34E
N. M. P. M., LEA COUNTY, NEW MEXICO

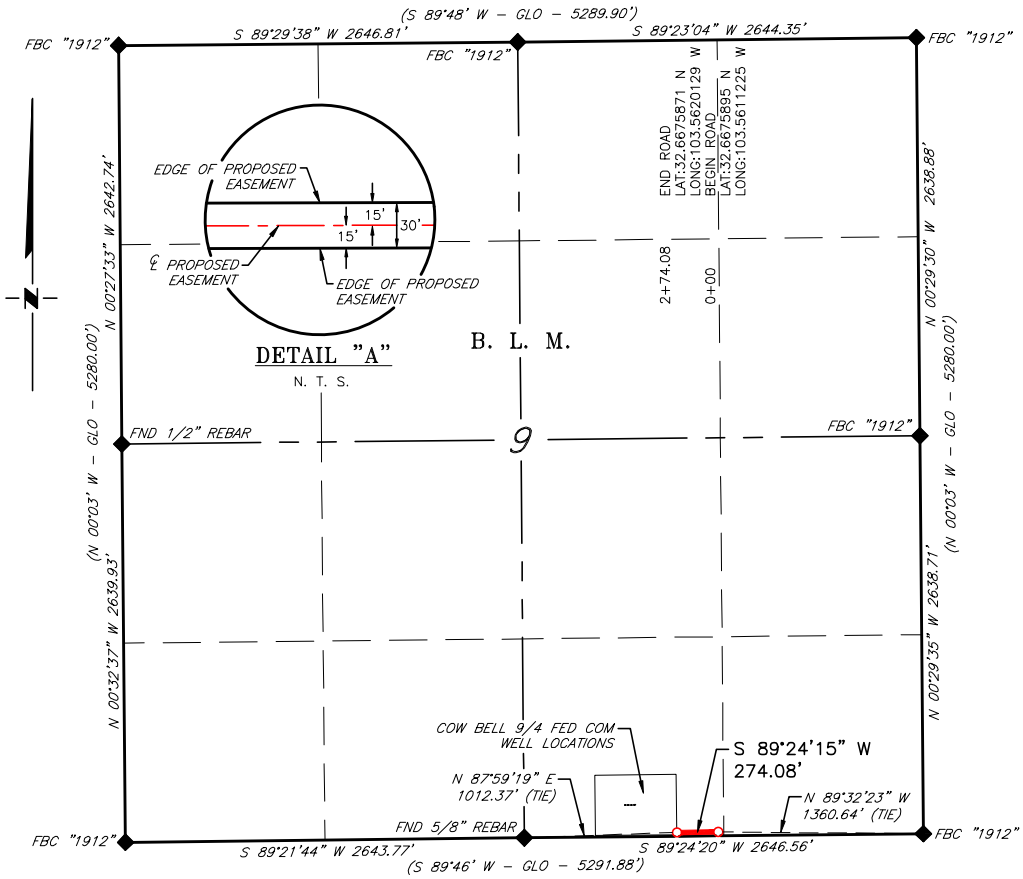

DESCRIPTION

A strip of land 30 feet wide, being 274.08 feet or 16.611 rods in length, lying in Section 9, Township 19 South, Range 34 East, N. M. P. M., Lea County, New Mexico, being 15 feet left and 15 feet right of the following described survey of a centerline across B. L. M. land:

BEGINNING at Engr. Sta. 0+00, a point in the Southeast quarter of Section 9, which bears, N 89°32'23" W, 1,360.64 feet, from a brass cap, stamped "1912", found for the Southeast corner of Section 9;

Thence S 89°24'15" W, 274.08 feet, to Engr. Sta. 2+74.08, the End of Survey, a point in the Southeast quarter of Section 9, which bears, N 87°59'19" E, 1,012.37 feet, from a 5/8–inch rebar, found for the South quarter corner of Section 9.

Said strip of land contains 0.189 acres, more or less, and is allocated by forties as follows:

SW 1/4 SE 1/4	274.08 Feet	16.611 Rods	0.189 Acres

SCALE: 1" = 1000'
0 500' 1000'

BEARINGS ARE GRID NAD 83 NM EAST
DISTANCES ARE HORIZ. GROUND.

LEGEND
( ) RECORD DATA – GLO
◆ FOUND MONUMENT AS NOTED
PROPOSED ACCESS ROAD

I, R. M. Howett, a N. M. Professional Surveyor, hereby certify that I prepared this plat from an actual survey made on the ground under my direct supervision, said survey and plat meet the Min. Stds. for Land Surveying in the State of N. M. and are true and correct to the best of my knowledge and belief.

Robert M. Howett
Robert M. Howett NM PS 19680

ROBERT M. HOWETT NEW MEXICO 19680 06/18/26 PROFESSIONAL SURVEYOR

NO.	REVISION	DATE

JOB NO.: LS26060442
DWG. NO.: 26060442–6

RRC ENERGY SERVICES, LLC.
701 S. CECIL ST., HOBBS, NM 88240 (575) 964–8200

SCALE: 1" = 1000'
DATE: 06/04/2026
SURVEYED BY: ML/AR/ZL
DRAWN BY: AR
APPROVED BY: RMH
SHEET: 1 OF 1

Copyright 2016 – All Rights Reserved

OCD Well Locations

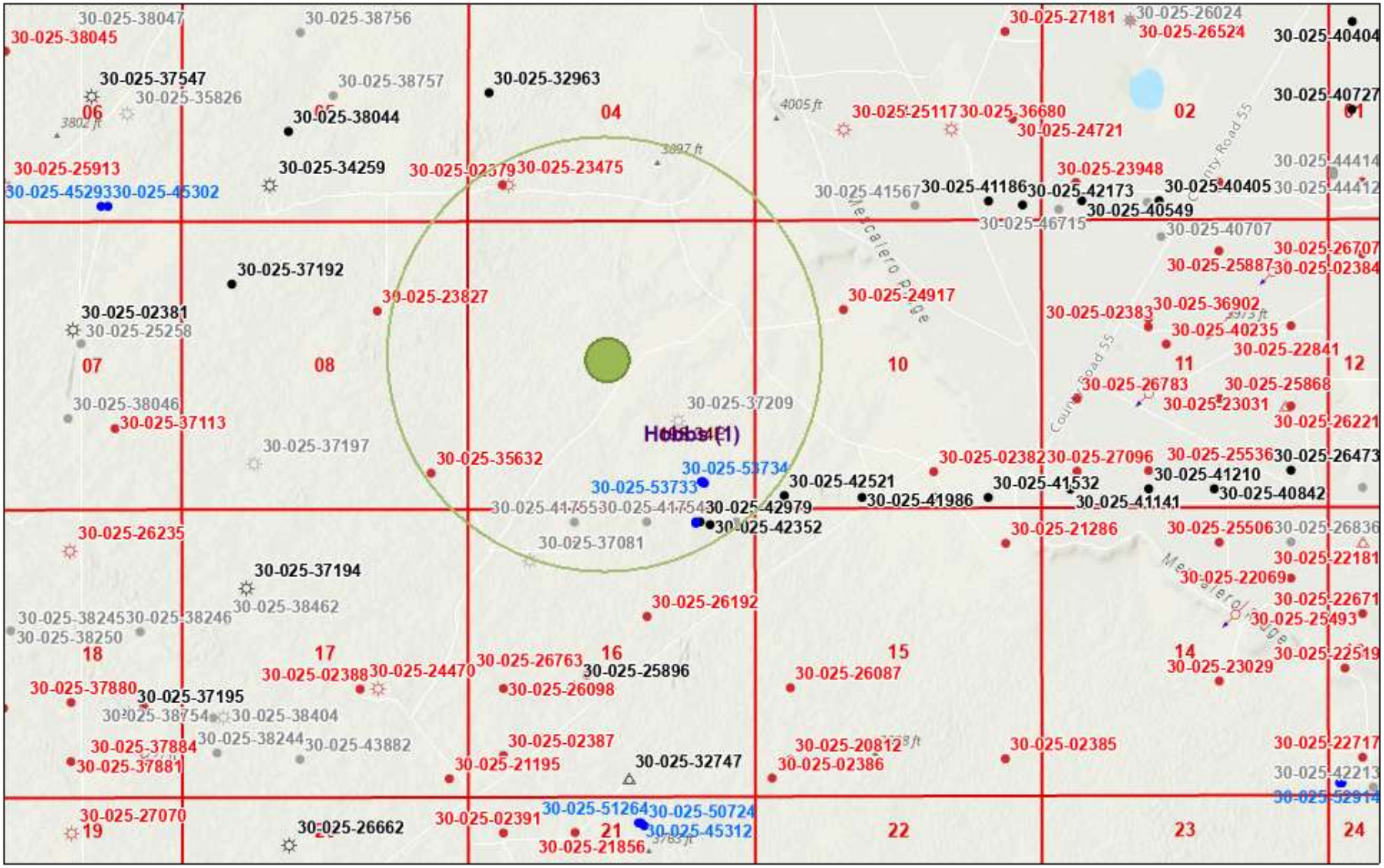

8/10/2026, 3:06:16 PM

1:36,112

0 0.25 0.5 1 mi

0 0.4 0.8 1.6 km

Areas
- Override 1
- Override 2

Wells - Large Scale
- Gas, Active
- Gas, Cancelled
- Gas, Plugged
- Injection, Plugged
- Oil, Active
- Oil, Cancelled
- Oil, New
- Oil, Plugged
- Salt Water Injection, Active
- Salt Water Injection, Plugged
- OCD Districts
- PLSS First Division
- PLSS Townships

Oil Conservation Division of the New Mexico Energy, Minerals and Natural Resources Department., OCD, BLM, Sources: Esri, TomTom, Garmin, FAO,

New Mexico Oil Conservation Division

NM OCD Oil and Gas Map. http://nm-emnrd.maps.arcgis.com/apps/webappviewer/index.html?id=4d017f2306164de29fd2fb9f8f35ca75: New Mexico Oil Conservation Division

MEWBOURNE OIL COMPANY
COW BELL 9/4 FED COM – UTILITIES
SECTION 9, T19S, R34E
N. M. P. M., LEA COUNTY, NEW MEXICO

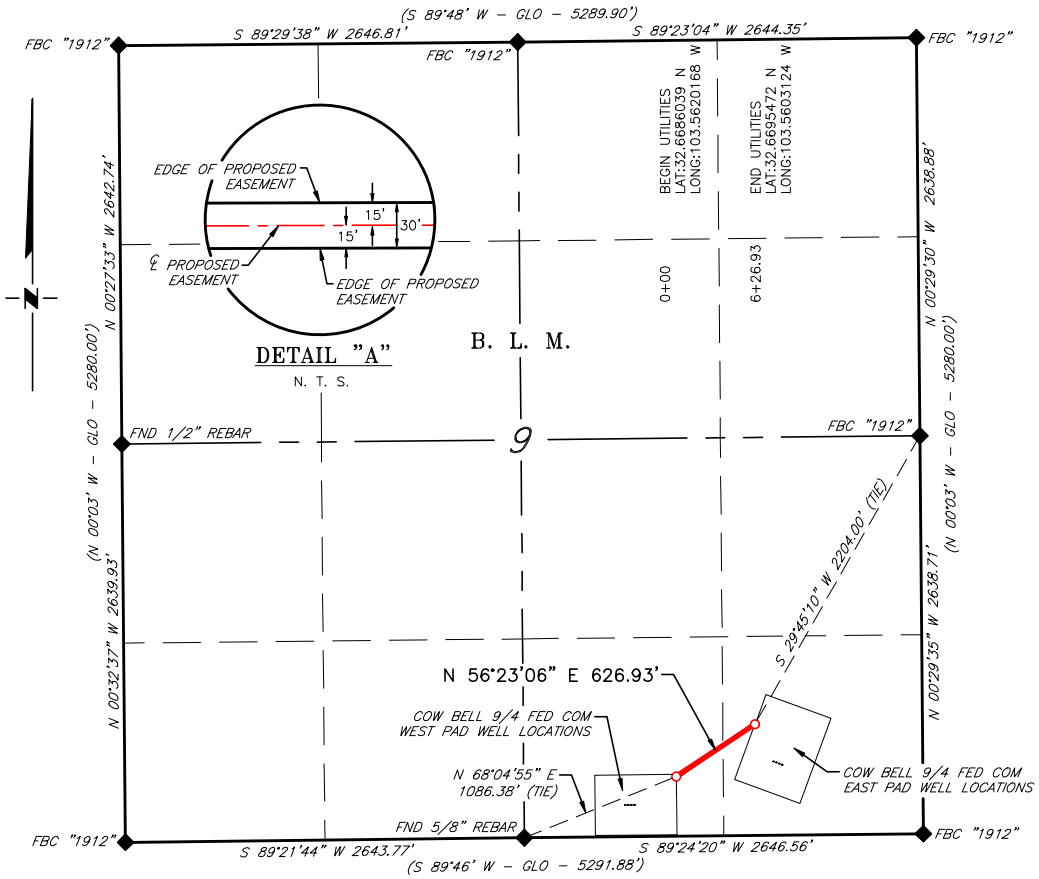

DESCRIPTION

A strip of land 30 feet wide, being 626.93 feet or 37.996 rods in length, lying in Section 9, Township 19 South, Range 34 East, N. M. P. M., Lea County, New Mexico, being 15 feet left and 15 feet right of the following described survey of a centerline across B. L. M. land:

BEGINNING at Engr. Sta. 0+00, a point in the Southeast quarter of Section 9, which bears, N 68°04'55" E, 1,086.38 feet, from a 5/8–inch rebar, found for the South quarter corner of Section 9;

Thence N 56°23'06" E, 626.93 feet, to Engr. Sta. 6+26.93, the End of Survey, a point in the Southeast quarter of Section 9, which bears, S 29°45'10" W, 2,204.00 feet, from a brass cap, stamped "1912", found for the East quarter corner of Section 9.

Said strip of land contains 0.432 acres, more or less, and is allocated by forties as follows:

SE 1/4 SE 1/4	254.29 Feet	15.412 Rods	0.175 Acres
SW 1/4 SE 1/4	372.64 Feet	22.584 Rods	0.257 Acres

SCALE: 1" = 1000'
0 500' 1000'

BEARINGS ARE GRID NAD 83 NM EAST
DISTANCES ARE HORIZ. GROUND.

LEGEND
( ) RECORD DATA – GLO
FOUND MONUMENT AS NOTED
PROPOSED UTILITIES

I, R. M. Howett, a N. M. Professional Surveyor, hereby certify that I prepared this plat from an actual survey made on the ground under my direct supervision, said survey and plat meet the Min. Stds. for Land Surveying in the State of N. M. and are true and correct to the best of my knowledge and belief.

Robert M. Howett
Robert M. Howett NM PS 19680

ROBERT M. HOWETT NEW MEXICO 19680 06/18/26 PROFESSIONAL SURVEYOR

NO.	REVISION	DATE

JOB NO.: LS26060442
DWG. NO.: 26060442–7

RRC ENERGY SERVICES, LLC.
701 S. CECIL ST., HOBBS, NM 88240 (575) 964–8200

SCALE: 1" = 1000'
DATE: 06/04/2026
SURVEYED BY: ML/AR/ZL
DRAWN BY: AR
APPROVED BY: RMH
SHEET: 1 OF 1

Copyright 2016 – All Rights Reserved

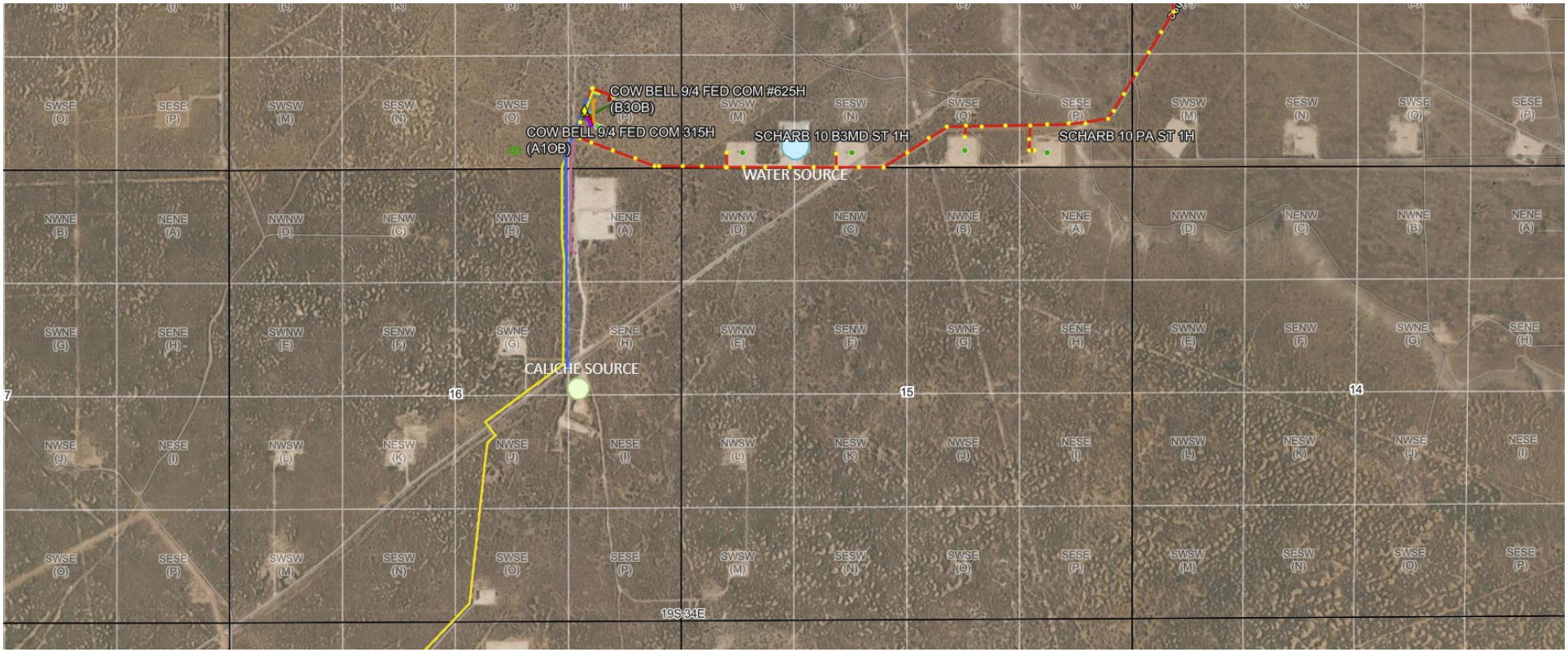
COW BELL 9/4 FED COM #625H
(B3OB)
COW BELL 9/4 FED COM 315H
(A1OB)
SCHARB 10 B3MD ST 1H
SCHARB 10 PA ST 1H
WATER SOURCE
CALICHE SOURCE
16
15
14
19S 34E

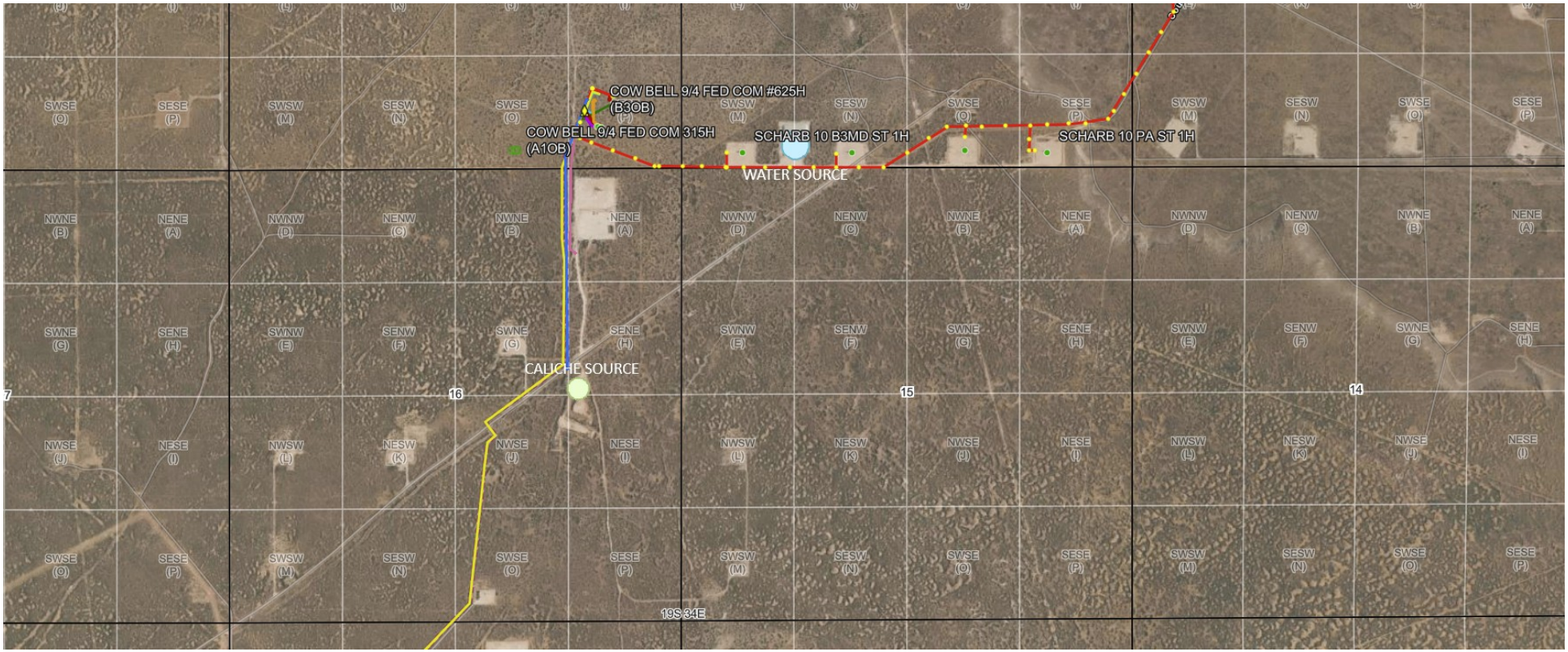
COW BELL 9/4 FED COM #625H
(B3OB)
COW BELL 9/4 FED COM 315H
(A1OB)
SCHARB 10 B3MD ST 1H
SCHARB 10 PA ST 1H
WATER SOURCE
CALICHE SOURCE
16
15
14
19S 34E

MEWBOURNE OIL COMPANY
COW BELL 9/4 FED COM #315H
(210' FSL & 1955' FEL)
SECTION 9, T19S, R34E
N. M. P. M., LEA CO., NEW MEXICO

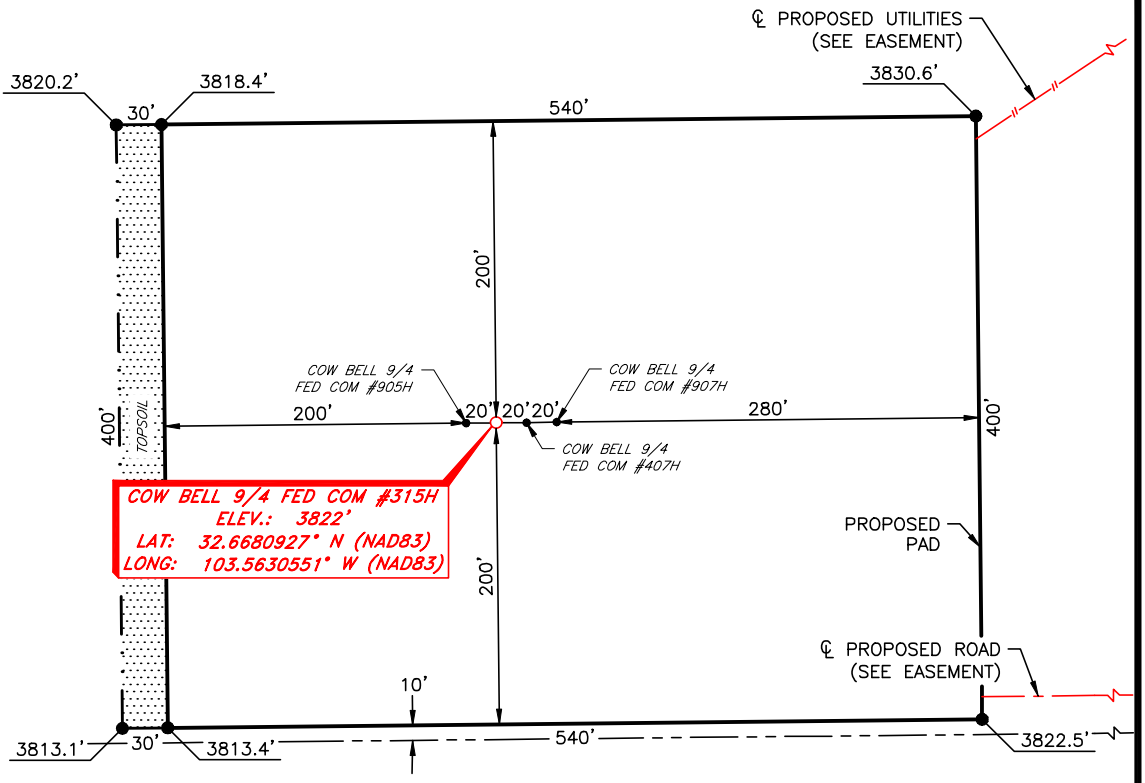

DIRECTIONS TO LOCATION

From the intersection of U.S. Hwy 62/180 (West Carlsbad Hwy) & CR #27-A (Marathon Rd.);

Go Southwest on U.S. Hwy 62/180 approx. 3.3 miles to a lease road on the right;

Turn right and go North approx. 2.7 miles road curves left;

Turn left and go West approx. 0.1 miles road curves right;

Turn right and go North approx. 0.1 miles to a lease road on the right;

Turn right and go Northeast approx. 1.0 miles to a lease road on the left;

Turn left and go North approx. 0.4 miles to a proposed road on the left;

Turn left and go West approx. 0.1 miles to location on the right.

THIS IS NOT A BOUNDARY SURVEY, APPARENT PROPERTY CORNERS AND PROPERTY LINES ARE SHOWN FOR INFORMATION ONLY.

SCALE: 1" = 100'
0 50' 100'

BEARINGS ARE NAD 83 GRID - NM EAST DISTANCES ARE GROUND.

I, R. M. Howett, a N. M. Professional Surveyor, hereby certify that I prepared this unclassified survey of a well location from an actual survey made on the ground under my direct supervision, said survey and plat meet the Min. Stds. for Land Surveying in the State of N. M. and are true and correct to the best of my knowledge and belief.

Robert M. Howett
Robert M. Howett NM PS 19680

ROBERT M. HOWETT
NEW MEXICO
19680
06/18/26
PROFESSIONAL SURVEYOR

NO.	REVISION	DATE

JOB NO.: LS26060443
DWG. NO.: 26060443-5

RRC ENERGY SERVICES, LLC.
701 S. CECIL ST., HOBBS, NM 88240 (575) 964-8200

SCALE: 1" = 100'
DATE: 06/04/2026
SURVEYED BY: ML/AR/ZL
DRAWN BY: AR
APPROVED BY: RMH
SHEET: 1 OF 1

Copyright 2016 - All Rights Reserved

MEWBOURNE OIL COMPANY
COW BELL 9/4 FED COM #315H
(210' FSL & 1955' FEL)
SECTION 9, T19S, R34E
N. M. P. M., LEA CO., NEW MEXICO

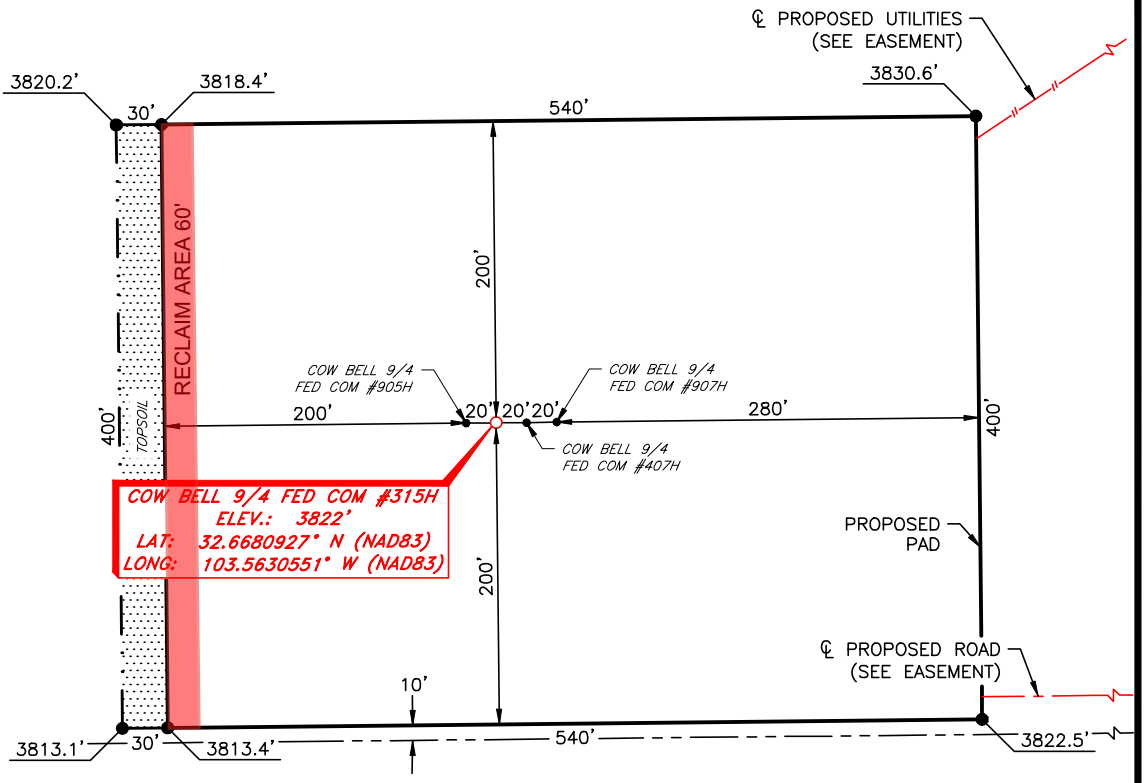

DIRECTIONS TO LOCATION

From the intersection of U.S. Hwy 62/180 (West Carlsbad Hwy) & CR #27-A (Marathon Rd.);

Go Southwest on U.S. Hwy 62/180 approx. 3.3 miles to a lease road on the right;

Turn right and go North approx. 2.7 miles road curves left;

Turn left and go West approx. 0.1 miles road curves right;

Turn right and go North approx. 0.1 miles to a lease road on the right;

Turn right and go Northeast approx. 1.0 miles to a lease road on the left;

Turn left and go North approx. 0.4 miles to a proposed road on the left;

Turn left and go West approx. 0.1 miles to location on the right.

THIS IS NOT A BOUNDARY SURVEY, APPARENT PROPERTY CORNERS AND PROPERTY LINES ARE SHOWN FOR INFORMATION ONLY.

SCALE: 1" = 100'
0 50' 100'

BEARINGS ARE NAD 83 GRID - NM EAST DISTANCES ARE GROUND.

I, R. M. Howett, a N. M. Professional Surveyor, hereby certify that I prepared this unclassified survey of a well location from an actual survey made on the ground under my direct supervision, said survey and plat meet the Min. Stds. for Land Surveying in the State of N. M. and are true and correct to the best of my knowledge and belief.

Robert M. Howett
Robert M. Howett NM PS 19680

ROBERT M. HOWETT
NEW MEXICO
19680
06/18/26
PROFESSIONAL SURVEYOR

NO.	REVISION	DATE

JOB NO.: LS26060443
DWG. NO.: 26060443-5

RRC ENERGY SERVICES, LLC.
701 S. CECIL ST., HOBBS, NM 88240 (575) 964-8200

SCALE: 1" = 100'
DATE: 06/04/2026
SURVEYED BY: ML/AR/ZL
DRAWN BY: AR
APPROVED BY: RMH
SHEET: 1 OF 1

Copyright 2016 - All Rights Reserved

AFMSS
U.S. Department of the Interior
BUREAU OF LAND MANAGEMENT

PWD Data Report
11/09/2026

APD ID: 10400113693 **Submission Date:** 09/03/2026

Operator Name: MEWBOURNE OIL COMPANY

Well Name: COW BELL 9/4 FED COM **Well Number:** 907H

Well Type: OIL WELL **Well Work Type:** Drill

Section 1 - General

Would you like to address long-term produced water disposal? NO

Section 2 - Lined

Would you like to utilize Lined Pit PWD options? N

Produced Water Disposal (PWD) Location:

PWD surface owner: **PWD disturbance (acres):**

Other PWD Surface Owner Description:

Lined pit PWD on or off channel:

Lined pit PWD discharge volume (bbl/day):

Lined pit

Pit liner description:

Pit liner manufacturers

Precipitated solids disposal:

Decribe precipitated solids disposal:

Precipitated solids disposal

Lined pit precipitated solids disposal schedule:

Lined pit precipitated solids disposal schedule

Lined pit reclamation description:

Lined pit reclamation

Leak detection system description:

Leak detection system

Operator Name: MEWBOURNE OIL COMPANY

Well Name: COW BELL 9/4 FED COM **Well Number:** 907H

Lined pit Monitor description:

Lined pit Monitor

Lined pit: do you have a reclamation bond for the pit?

Is the reclamation bond a rider under the BLM bond?

Lined pit bond number:

Lined pit bond amount:

Additional bond information

Section 3 - Unlined

Would you like to utilize Unlined Pit PWD options? N

Produced Water Disposal (PWD) Location:

PWD disturbance (acres): **PWD surface owner:**

Other PWD Surface Owner Description:

Unlined pit PWD on or off channel:

Unlined pit PWD discharge volume (bbl/day):

Unlined pit

Precipitated solids disposal:

Decribe precipitated solids disposal:

Precipitated solids disposal

Unlined pit precipitated solids disposal schedule:

Unlined pit precipitated solids disposal schedule

Unlined pit reclamation description:

Unlined pit reclamation

Unlined pit Monitor description:

Unlined pit Monitor

Do you propose to put the produced water to beneficial use?

Beneficial use user

Estimated depth of the shallowest aquifer (feet):

Precipitated Solids Permit

Does the produced water have an annual average Total Dissolved Solids (TDS) concentration equal to or less than that of the existing water to be protected?

TDS lab results:

Geologic and hydrologic

Operator Name: MEWBOURNE OIL COMPANY

Well Name: COW BELL 9/4 FED COM **Well Number:** 907H

State

Unlined Produced Water Pit Estimated

Unlined pit: do you have a reclamation bond for the pit?

Is the reclamation bond a rider under the BLM bond?

Unlined pit bond number:

Unlined pit bond amount:

Additional bond information

Section 4 -

Would you like to utilize Injection PWD options? N

Produced Water Disposal (PWD) Location:

PWD surface owner: **PWD disturbance (acres):**

Other PWD Surface Owner Description:

Injection PWD discharge volume (bbl/day):

Injection well mineral owner:

Injection well type:

Injection well number: **Injection well name:**

Assigned injection well API number? **Injection well API number:**

Injection well new surface disturbance (acres):

Minerals protection information:

Mineral protection

Underground Injection Control (UIC) Permit?

UIC Permit

Section 5 - Surface

Would you like to utilize Surface Discharge PWD options? N

Produced Water Disposal (PWD) Location:

PWD surface owner: **PWD disturbance (acres):**

Other PWD Surface Owner Description :

Surface discharge PWD discharge volume (bbl/day):

Surface Discharge NPDES Permit?

Surface Discharge NPDES Permit attachment:

Surface Discharge site facilities information:

Surface discharge site facilities map:

Operator Name: MEWBOURNE OIL COMPANY

Well Name: COW BELL 9/4 FED COM **Well Number:** 907H

Section 6 -

Would you like to utilize Other PWD options? N

Produced Water Disposal (PWD) Location:

PWD surface owner: **PWD disturbance (acres):**

PWD Surface Owner Description:

Other PWD discharge volume (bbl/day):

Other PWD type description:

Other PWD type

Have other regulatory requirements been met?

Other regulatory requirements

AFMSS
U.S. Department of the Interior
BUREAU OF LAND MANAGEMENT

Bond Info Data
11/09/2026

APD ID: 10400113693
Submission Date: 09/03/2026
Operator Name: MEWBOURNE OIL COMPANY
Well Name: COW BELL 9/4 FED COM
Well Number: 907H
Well Type: OIL WELL
Well Work Type: Drill

Highlighted data reflects the most recent changes
Show Final Text

Bond

Federal/Indian APD: FED

BLM Bond number: NMB106714150

BIA Bond number:

Do you have a reclamation bond? NO

Is the reclamation bond a rider under the BLM bond?

Is the reclamation bond BLM or Forest Service?

BLM reclamation bond number:

Forest Service reclamation bond number:

Forest Service reclamation bond attachment:

Reclamation bond amount:

Reclamation bond rider amount:

Additional reclamation bond information attachment:

Sante Fe Main Office
Phone: (505) 476-3441

General Information
Phone: (505) 629-6116

Online Phone Directory
https://www.emnrd.nm.gov/ocd/contact-us

State of New Mexico
Energy, Minerals and Natural Resources
Oil Conservation Division
1220 S. St Francis Dr.
Santa Fe, NM 87505

ACKNOWLEDGMENTS

Operator: MEWBOURNE OIL CO P.O. Box 5270 Hobbs, NM 88240	OGRID: 14744
	Action Number: 640444
	Action Type: [C-101] BLM - Federal/Indian Land Lease (Form 3160-3)

ACKNOWLEDGMENTS

☑	I hereby certify that no additives containing PFAS chemicals will be added to the completion or recompletion of this well.

Sante Fe Main Office
Phone: (505) 476-3441

General Information
Phone: (505) 629-6116

Online Phone Directory
https://www.emnrd.nm.gov/ocd/contact-us

State of New Mexico
Energy, Minerals and Natural Resources
Oil Conservation Division
1220 S. St Francis Dr.
Santa Fe, NM 87505

CONDITIONS

Action 640444

CONDITIONS

Operator: MEWBOURNE OIL CO P.O. Box 5270 Hobbs, NM 88240	OGRID: 14744
	Action Number: 640444
	Action Type: [C-101] BLM - Federal/Indian Land Lease (Form 3160-3)

CONDITIONS

Created By	Condition	Condition Date
mleal	Cement is required to circulate on both surface and intermediate1 strings of casing.	11/9/2026
jeffrey.harrison	If the method of isolation was not by circulation, a CBL must be performed; if strata isolation is not achieved, then remediation will be required before further operations.	11/13/2026
jeffrey.harrison	All conducted logs shall be submitted to the OCD as a [UF-WL] EP Well Log Submission (WellLog).	11/13/2026
jeffrey.harrison	If a DV tool is used, once the DV tool is opened and circulation is established, it needs to be noted if cement is circulated off of the top of the DV tool and how much.	11/13/2026
jeffrey.harrison	If cement is not circulated off of the top of the DV tool, then a CBL will be required. Depending upon the results of the CBL, remedial action may be required prior to drilling operations continuing.	11/13/2026
jeffrey.harrison	Any string of casing or liner that is not circulated to surface must have a minimum of 200' of cement tie-back into the previous string of casing.	11/13/2026
jeffrey.harrison	Should the produced GOR differ from the estimation to such a degree that the pool type will be reclassified to either oil or gas, the pool and spacing units may need to be adjusted.	11/13/2026
jeffrey.harrison	File As Drilled C-102 and a directional Survey with C-104 completion packet.	11/13/2026
jeffrey.harrison	Notify the OCD 24 hours prior to casing & cement.	11/13/2026
jeffrey.harrison	Once the well is spud, to prevent ground water contamination through whole or partial conduits from the surface, the operator shall drill without interruption through the fresh water zone or zones and shall immediately set in cement the water protection string.	11/13/2026
jeffrey.harrison	Oil base muds are not to be used until fresh water zones are cased and cemented providing isolation from the oil or diesel. This includes synthetic oils. Oil based mud, drilling fluids and solids must be contained in a steel closed loop system.	11/13/2026