DATE IN	SUSPENSE	ENGINEER	LOGGED IN	TYPE	APP NO.
1/11/24		MAM	1/18/2017	OLM	pMAM1801054478

ABOVE THIS LINE FOR DIVISION USE ONLY

NEW MEXICO OIL CONSERVATION DIVISION
- Engineering Bureau -
1220 South St. Francis Drive, Santa Fe, NM 87505

RECEIVED OCD
2018 JAN 10 P 2:54

ADMINISTRATIVE APPLICATION CHECKLIST

THIS CHECKLIST IS MANDATORY FOR ALL ADMINISTRATIVE APPLICATIONS FOR EXCEPTIONS TO DIVISION RULES AND REGULATIONS WHICH REQUIRE PROCESSING AT THE DIVISION LEVEL IN SANTA FE

Application Acronyms:

[NSL-Non-Standard Location] [NSP-Non-Standard Proration Unit] [SD-Simultaneous Dedication]
[DHC-Downhole Commingling] [CTB-Lease Commingling] [PLC-Pool/Lease Commingling]
[PC-Pool Commingling] [OLS - Off-Lease Storage] [OLM-Off-Lease Measurement]
[WFX-Waterflood Expansion] [PMX-Pressure Maintenance Expansion]
[SWD-Salt Water Disposal] [IPI-Injection Pressure Increase]
[EOR-Qualified Enhanced Oil Recovery Certification] [PPR-Positive Production Response]

[1] **TYPE OF APPLICATION** - Check Those Which Apply for [A]

[A] Location - Spacing Unit - Simultaneous Dedication
☐ NSL ☐ NSP ☐ SD

Check One Only for [B] or [C]

[B] Commingling - Storage - Measurement
☐ DHC ☐ CTB ☐ PLC ☐ PC ☐ OLS ☒ OLM

[C] Injection - Disposal - Pressure Increase - Enhanced Oil Recovery
☐ WFX ☐ PMX ☐ SWD ☐ IPI ☐ EOR ☐ PPR

[D] Other: Specify _____

-OLM
- EOG Resources Inc
7377
Well
-Dee State Com #1H
30-015-44558
-Dee State Com #2H
30-015-44563
Pool
- N. Seven Rivers; Glorieta-Yeso
97565

[2] **NOTIFICATION REQUIRED TO:** - Check Those Which Apply, or ☐ Does Not Apply

[A] ☒ Working, Royalty or Overriding Royalty Interest Owners

[B] ☐ Offset Operators, Leaseholders or Surface Owner

[C] ☐ Application is One Which Requires Published Legal Notice

[D] ☒ Notification and/or Concurrent Approval by BLM or SLO
U.S. Bureau of Land Management - Commissioner of Public Lands, State Land Office

[E] ☒ For all of the above, Proof of Notification or Publication is Attached, and/or,

[F] ☐ Waivers are Attached

[3] **SUBMIT ACCURATE AND COMPLETE INFORMATION REQUIRED TO PROCESS THE TYPE OF APPLICATION INDICATED ABOVE.**

[4] **CERTIFICATION:** I hereby certify that the information submitted with this application for administrative approval is **accurate** and **complete** to the best of my knowledge. I also understand that **no action** will be taken on this application until the required information and notifications are submitted to the Division.

Note: Statement must be completed by an individual with managerial and/or supervisory capacity.

Miriam Morales	[signature]	Production Acct. Asst.	1/8/18
Print or Type Name	Signature	Title	Date

Miriam_morales@eogresources.com
e-mail Address

District I
1625 N. French Drive, Hobbs, NM 88240
District II
1301 W. Grand Ave, Artesia, NM 88210
District III
1000 Rio Brazos Road, Aztec, NM 87410
District IV
1220 S. St Francis Dr, Santa Fe, NM 87505

State of New Mexico
Energy, Minerals and Natural Resources Department

OIL CONSERVATION DIVISION
1220 S. St Francis Drive
Santa Fe, New Mexico 87505

Form C-107-B
Revised June 10, 2003

Submit the original application to the Santa Fe office with one copy to the appropriate District Office.

APPLICATION FOR SURFACE COMMINGLING (DIVERSE OWNERSHIP)

OPERATOR NAME: EOG Resources
OPERATOR ADDRESS: 104 South Fourth St. Artesia, NM 88210
APPLICATION TYPE:

☐ Pool Commingling ☐ Lease Commingling ☐ Pool and Lease Commingling ☒ Off-Lease Storage and Measurement (Only if not Surface Commingled)

LEASE TYPE: ☐ Fee ☒ State ☐ Federal

Is this an Amendment to existing Order? ☐ Yes ☒ No If "Yes", please include the appropriate Order No. _____
Have the Bureau of Land Management (BLM) and State Land office (SLO) been notified in writing of the proposed commingling
☐ Yes ☒ No

(A) POOL COMMINGLING
Please attach sheets with the following information

(1) Pool Names and Codes	Gravities / BTU of Non-Commingled Production	Calculated Gravities / BTU of Commingled Production		Calculated Value of Commingled Production	Volumes

(2) Are any wells producing at top allowables? ☐ Yes ☐ No
(3) Has all interest owners been notified by certified mail of the proposed commingling? ☐ Yes ☐ No.
(4) Measurement type: ☐ Metering ☐ Other (Specify)
(5) Will commingling decrease the value of production? ☐ Yes ☐ No If "yes", describe why commingling should be approved

(B) LEASE COMMINGLING
Please attach sheets with the following information

(1) Pool Name and Code.
(2) Is all production from same source of supply? ☐ Yes ☐ No
(3) Has all interest owners been notified by certified mail of the proposed commingling? ☐ Yes ☐ No
(4) Measurement type: ☐ Metering ☐ Other (Specify)

(C) POOL and LEASE COMMINGLING
Please attach sheets with the following information

(1) Complete Sections A and E.

(D) OFF-LEASE STORAGE and MEASUREMENT
Please attached sheets with the following information

(1) Is all production from same source of supply? ☒ Yes ☐ No
(2) Include proof of notice to all interest owners.

(E) ADDITIONAL INFORMATION (for all application types)
Please attach sheets with the following information

(1) A schematic diagram of facility, including legal location.
(2) A plat with lease boundaries showing all well and facility locations. Include lease numbers if Federal or State lands are involved.
(3) Lease Names, Lease and Well Numbers, and API Numbers.

I hereby certify that the information above is true and complete to the best of my knowledge and belief.

SIGNATURE: Miriam L Morales TITLE: Production Acct. Asst DATE: 1/8/18

TYPE OR PRINT NAME Miriam Morales TELEPHONE NO.: (575) 748-1471

E-MAIL ADDRESS: miriam_morales@eogresources.com

Submit 1 Copy To Appropriate District Office
District I – (575) 393-6161
1625 N. French Dr., Hobbs, NM 88240
District II – (575) 748-1283
811 S. First St., Artesia, NM 88210
District III – (505) 334-6178
1000 Rio Brazos Rd., Aztec, NM 87410
District IV – (505) 476-3460
1220 S. St. Francis Dr., Santa Fe, NM 87505

State of New Mexico
Energy, Minerals and Natural Resources

OIL CONSERVATION DIVISION
1220 South St. Francis Dr.
Santa Fe, NM 87505

Form C-103
Revised August 1, 2011

WELL API NO. 30-015-44558

5. Indicate Type of Lease STATE ☒ FEE ☐

6. State Oil & Gas Lease No. LG-1525

SUNDRY NOTICES AND REPORTS ON WELLS
(DO NOT USE THIS FORM FOR PROPOSALS TO DRILL OR TO DEEPEN OR PLUG BACK TO A DIFFERENT RESERVOIR. USE "APPLICATION FOR PERMIT" (FORM C-101) FOR SUCH PROPOSALS.)

7. Lease Name or Unit Agreement Name: Dee State Com

1. Type of Well: Oil Well ☒ Gas Well ☐ Other

8. Well Number 1H

2. Name of Operator: EOG Resources, Inc.

9. OGRID Number 7377

3. Address of Operator: 104 S. Fourth Street Artesia, NM 88210

10. Pool name or Wildcat: N. Seven Rivers; Glorietta-Yeso

4. Well Location

Unit Letter M : 755 feet from the South line and 165 feet from the West line

Section 36 Township 19S Range 24E NMPM County Eddy

11. Elevation *(Show whether DR, RKB, RT, GR, etc.)* 3630' GR

12. Check Appropriate Box to Indicate Nature of Notice, Report or Other Data

NOTICE OF INTENTION TO:				SUBSEQUENT REPORT OF:			
PERFORM REMEDIAL WORK	☐	PLUG AND ABANDON	☐	REMEDIAL WORK	☐	ALTERING CASING	☐
TEMPORARILY ABANDON	☐	CHANGE PLANS	☐	COMMENCE DRILLING OPNS.	☐	P AND A	☐
PULL OR ALTER CASING	☐	MULTIPLE COMPL	☐	CASING/CEMENT JOB	☐		
DOWNHOLE COMMINGLE	☐						
OTHER: Off Lease measurement	☒			OTHER:	☐		

13. Describe proposed or completed operations. (Clearly state all pertinent details, and give pertinent dates, including estimated date of starting any proposed work). SEE RULE 19.15.7.14 NMAC. For Multiple Completions: Attach wellbore diagram of proposed completion or recompletion.

EOG Resources respectfully requests administrative approval to Off Lease measure, sale and store production for the following wells:

Dee State Com #1H (not yet drilled)
N. Seven Rivers; Glor-Yeso
Sec. 36-T19S-R24E
API #30-015-44558
LG-1525
Eddy County, NM

Dee State Com #2H (not yet drilled)
N. Seven Rivers; Glor-Yeso
Sec. 36-T19S-R24E
API #30-015-44563
LG-1525
Eddy County, NM

The oil and gas production will be measured and sold at a CTB located in Sec. 35-T19S-R24E, Fee land. Please see attached plats and site security diagram.

Ownership and pools are identical. All owners have been notified. (see attached copies of certified mail)

The purpose of the Off lease measurement of production is in the interest of conservation, the reduction of environmental impact area, and overall emissions. It will not result in reduced royalty or improper measurement of production.

We understand that the request approval will not constitute the granting of any right-of-way or construction rights not granted by the lease instrument. And, we will submit within 30 days an application for right-of-way approval to the BLM's Realty Section in your office if we have not already done so.

I hereby certify that the information above is true and complete to the best of my knowledge and belief.

SIGNATURE Miriam Morales TITLE Asst.Production Acct. DATE 1/8/18

Type or print name Miriam Morales E-mail address: Miriam_morales@eogresources.com PHONE: 575-748-4200

For State Use Only

APPROVED BY: _____ TITLE _____ DATE _____

Conditions of Approval (if any):

FACILITY NAME: DEE STATE CTB, Sec. 35-T19S-R24E

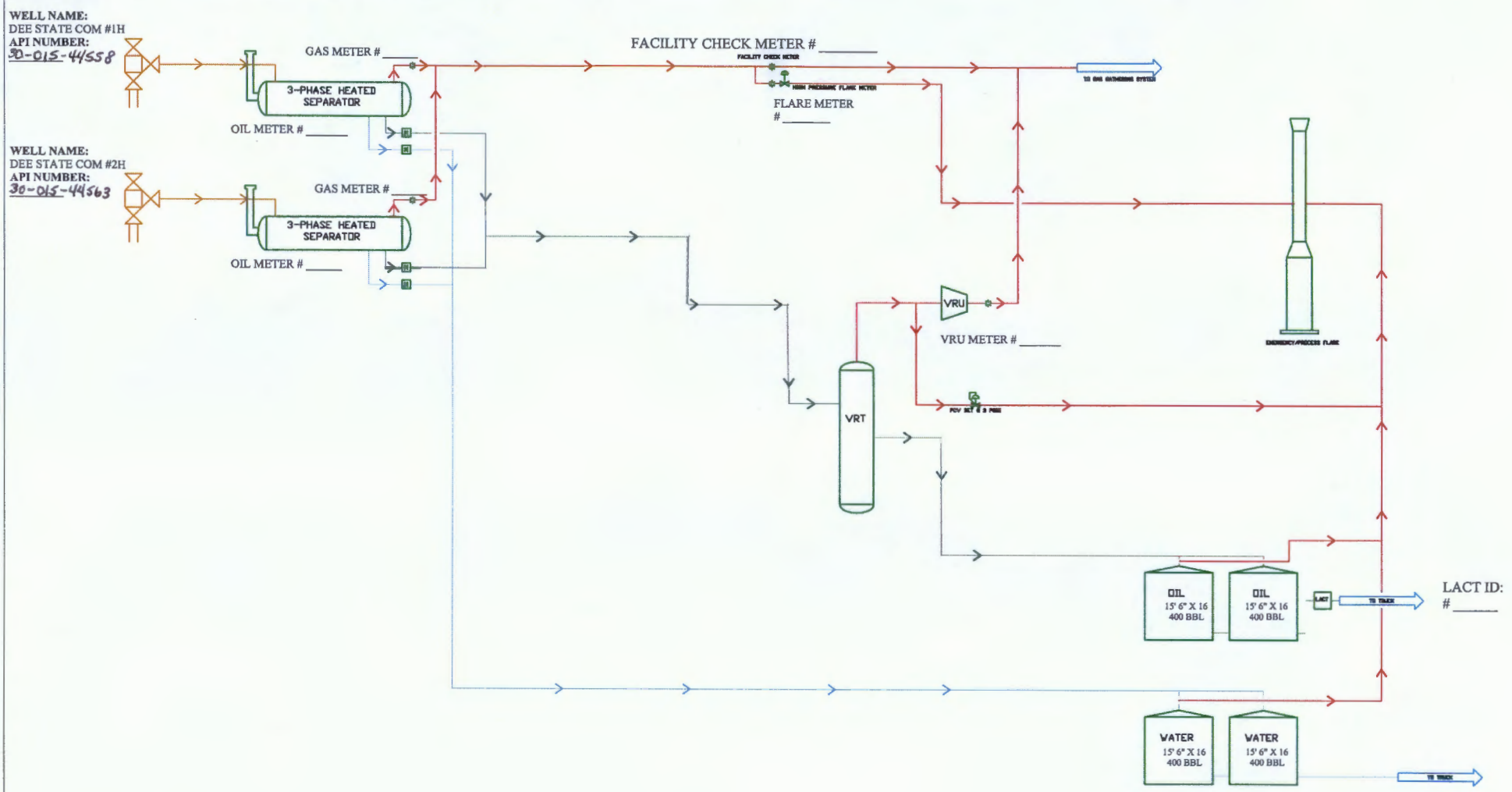

Gas Orifice Meter

M Liquid Meter

DEE STATE CTB PROCESS FLOW		
EOG RESOURCES ARTESIA DIVISION	BY: LJM	rev. 00 12/20/2017

eog resources

EOG Resources, Inc.
104 South Fourth
Artesia, NM 88210

January 8, 2018

RE: Off Lease Measurement
Dee State Com #1H and Dee State Com #2H
Eddy County, New Mexico

Dear Interest Owner,

EOG Resources is requesting administrative approval from the Oil Conservation Division and State Land Office to Off Lease Measure, sale and store production for the following wells:

Dee State Com #1H	Dee State Com #2H
N. Seven Rives;Glorietta-Yeso	N. Seven Rivers;Glorietta-Yeso
Sec. 36-T19S-R24E	Sec. 36-T19S-R24E
API #30-015-44558	API #30-015-44563
LG-1525	LG-1525
Eddy County, NM	Eddy County, NM

The oil and gas production will be measured and sold at the CTB located at Sec. 35-T19S-R24E, Fee land.

Ownership and pools are identical.

The off lease measurement of production is in the interest of conservation, economic feasibility, the reduction of environmental impact area, and overall emissions. It will not reduce royalty or improper measurement of production.

We understand that the request approval will not constitute the granting of any right-of-way or construction rights not granted by the lease instrument. And, we will submit within 30 days an application for right-of-way approval to the BLM's Realty Section in your office if we have not already done so.

Any objections must be filed in writing with the Oil Conservation Division in Santa Fe within 20 days from the date the division received the application. Application will be sent in conjunction with notification to owners.

If you should have any questions, please call me at (575)748-4200 (direct line)

Sincerely,

Miriam Morales
Production Acct. Asst.

EOG Y Resources
104 South 4th Street
Artesia, NM 88210

7014 0510 0001 0744 2103

7014 0510 0001 0744 2103

U.S. Postal Service™
CERTIFIED MAIL™ RECEIPT
(Domestic Mail Only; No Insurance Coverage Provided)

For delivery information visit our website at www.usps.com

Postage	$
Certified Fee	
Return Receipt Fee (Endorsement Required)	
Restricted Delivery Fee (Endorsement Required)	
Total Postage & Fees	$

Postmark Here

Dec 9 2005 OFFICIAL USE
Miami

PLACE STICKER AT TOP OF ENVELOPE TO THE RIGHT OF THE RETURN ADDRESS, FOLD AT DOTTED LINE

Sent To Randy L. Cone
Street, Apt. No.; or PO Box No. PO Box 231034
City, State, ZIP+4 Anchorage, AK 99523

PS Form 3800, August 2006 See Reverse for Instructions

Randy L. Cone
P O Box 231034
Anchorage, AK 99523

SENDER: COMPLETE THIS SECTION

- Complete items 1, 2, and 3. Also complete item 4 if Restricted Delivery is desired.
- Print your name and address on the reverse so that we can return the card to you.
- Attach this card to the back of the mailpiece, or on the front if space permits.

1. Article Addressed to:

Randy L. Cone
P O Box 231034
Anchorage, AK 99523

COMPLETE THIS SECTION ON DELIVERY

A. Signature
X ☐ Agent ☐ Addressee

B. Received by (Printed Name) C. Date of Delivery

D. Is delivery address different from item 1? ☐ Yes
If YES, enter delivery address below: ☐ No

3. Service Type
☒ Certified Mail ☐ Express Mail
☐ Registered ☐ Return Receipt for Merchandise
☐ Insured Mail ☐ C.O.D.

4. Restricted Delivery? (Extra Fee) ☐ Yes

2. Article Number (Transfer from s 7014 0510 0001 0744 2103

PS Form 3811, February 2004 Domestic Return Receipt 102595-02-M-1540

EOG Y Resources
104 South 4th Street
Artesia, NM 88210

7014 0510 0001 0744 2127

7014 0510 0001 0744 2127

U.S. Postal Service™
CERTIFIED MAIL™ RECEIPT
(Domestic Mail Only; No Insurance Coverage Provided)

For delivery information visit our website at www.usps.com

OFFICIAL USE

Postage $
Certified Fee
Return Receipt Fee (Endorsement Required)
Restricted Delivery Fee (Endorsement Required)
Total Postage & Fees $

Postmark Here
Mariam Cone

PLACE STICKER AT TOP OF ENVELOPE TO THE RIGHT OF THE RETURN ADDRESS, FOLD AT DOTTED LINE

Sent To Kenneth G. Cone
Street, Apt. No.; or PO Box No. P.O. Box 507
City, State, ZIP+4 Dripping Springs, TX 78620

PS Form 3800, August 2006 See Reverse for Instructions

Kenneth G. Cone
P O Box 507
Dripping Springs, TX 78620

SENDER: COMPLETE THIS SECTION

- Complete items 1, 2, and 3. Also complete item 4 if Restricted Delivery is desired.
- Print your name and address on the reverse so that we can return the card to you.
- Attach this card to the back of the mailpiece, or on the front if space permits.

1. Article Addressed to:

Kenneth G. Cone
P O Box 507
Dripping Springs, TX 78620

COMPLETE THIS SECTION ON DELIVERY

A. Signature
X
☐ Agent
☐ Addressee

B. Received by (Printed Name)

C. Date of Delivery

D. Is delivery address different from item 1? ☐ Yes
If YES, enter delivery address below: ☐ No

3. Service Type
☒ Certified Mail ☐ Express Mail
☐ Registered ☐ Return Receipt for Merchandise
☐ Insured Mail ☐ C.O.D.

4. Restricted Delivery? (Extra Fee) ☐ Yes

2. Article Number (Transfer from service label) 7014 0510 0001 0744 2127

PS Form 3811, February 2004 Domestic Return Receipt 102595-02-M-1540

CERTIFIED MAIL™

EOG Y Resources
104 South 4th Street
Artesia, NM 88210

7014 0510 0001 0744 2134

7014 0510 0001 0744 2134

U.S. Postal Service™
CERTIFIED MAIL™ RECEIPT
(Domestic Mail Only; No Insurance Coverage Provided)

For delivery information visit our website at www.usps.com®

OFFICIAL USE

Postage $
Certified Fee
Return Receipt Fee (Endorsement Required)
Restricted Delivery Fee (Endorsement Required)
Total Postage & Fees $

Sent To LFN Cone Properties, LLC
Street, Apt. No.; or PO Box No. P.O. Box 1559
City, State, ZIP+4 Midland TX 79702

PS Form 3800, August 2006 See Reverse for Instructions

LFN Cone Properties, LLC
P O Box 1559
Midland, TX 79702

SENDER: COMPLETE THIS SECTION

- Complete items 1, 2, and 3. Also complete item 4 if Restricted Delivery is desired.
- Print your name and address on the reverse so that we can return the card to you.
- Attach this card to the back of the mailpiece, or on the front if space permits.

1. Article Addressed to:

LFN Cone Properties, LLC
P O Box 1559
Midland, TX 79702

COMPLETE THIS SECTION ON DELIVERY

A. Signature
X
☐ Agent
☐ Addressee

B. Received by (Printed Name)
C. Date of Delivery

D. Is delivery address different from item 1? ☐ Yes
If YES, enter delivery address below: ☐ No

3. Service Type
☑ Certified Mail ☐ Express Mail
☐ Registered ☐ Return Receipt for Merchandise
☐ Insured Mail ☐ C.O.D.

4. Restricted Delivery? (Extra Fee) ☐ Yes

2. Article Number (Transfer from service label) 7014 0510 0001 0744 2134

PS Form 3811, February 2004 Domestic Return Receipt 102595-02-M-1540

CERTIFIED MAIL™

EOG Y Resources
104 South 4th Street
Artesia, NM 88210

7014 0510 0001 0744 2110

7014 0510 0001 0744 2110

U.S. Postal Service™
CERTIFIED MAIL™ RECEIPT
(Domestic Mail Only; No Insurance Coverage Provided)

For delivery information visit our website at www.usps.com

Postage	$
Certified Fee	
Return Receipt Fee (Endorsement Required)	
Restricted Delivery Fee (Endorsement Required)	
Total Postage & Fees	$

Postmark Here

Sent To: Finley Resources, Inc.
Street, Apt. No.; or PO Box No.: 1308 Lake St. #200
City, State, ZIP+4: Ft Worth, TX 76102

PS Form 3800, August 2006 — See Reverse for Instructions

Finley Resources, Inc.
1308 Lake Street #200
FT Worth, TX 76102

SENDER: COMPLETE THIS SECTION

- Complete items 1, 2, and 3. Also complete item 4 if Restricted Delivery is desired.
- Print your name and address on the reverse so that we can return the card to you.
- Attach this card to the back of the mailpiece, or on the front if space permits.

1. Article Addressed to:

Finley Resources, Inc.
1308 Lake Street #200
FT Worth, TX 76102

COMPLETE THIS SECTION ON DELIVERY

A. Signature
X
☐ Agent
☐ Addressee

B. Received by (Printed Name)

C. Date of Delivery

D. Is delivery address different from item 1? ☐ Yes
If YES, enter delivery address below: ☐ No

3. Service Type
☒ Certified Mail ☐ Express Mail
☐ Registered ☐ Return Receipt for Merchandise
☐ Insured Mail ☐ C.O.D.

4. Restricted Delivery? (Extra Fee) ☐ Yes

2. Article Number
(Transfer from service label) 7014 0510 0001 0744 2110

PS Form 3811, February 2004 Domestic Return Receipt 102595-02-M-1540

EOG Y Resources
104 South 4th Street
Artesia, NM 88210

7014 0510 0001 0744 2141

7014 0510 0001 0744 2141

U.S. Postal Service™
CERTIFIED MAIL™ RECEIPT
(Domestic Mail Only; No Insurance Coverage Provid

For delivery information visit our website at www.usps.com.

Postage $
Certified Fee
Return Receipt Fee (Endorsement Required)
Restricted Delivery Fee (Endorsement Required)
Total Postage & Fees $

Postmark Here

Sent To Auvenshine's Children's
Street, Apt. No.; or PO Box No. P.O. Box 507
City, State, ZIP+4 Dripping Springs, TX 78620

PS Form 3800, August 2006 See Reverse for Instructio

uvenshine's Children's
estamentary Trust, Cathie M.
O Box 507
ripping Springs, TX 78620

SENDER: COMPLETE THIS SECTION

- Complete items 1, 2, and 3. Also complete item 4 if Restricted Delivery is desired.
- Print your name and address on the reverse so that we can return the card to you.
- Attach this card to the back of the mailpiece, or on the front if space permits.

1. Article Addressed to:

Auvenshine's Children's
Testamentary Trust, Cathie M.
P O Box 507
Dripping Springs, TX 78620

COMPLETE THIS SECTION ON DELIVERY

A. Signature
X
☐ Agent
☐ Addressee

B. Received by (Printed Name)
C. Date of Delivery

D. Is delivery address different from item 1? ☐ Yes
If YES, enter delivery address below: ☐ No

3. Service Type
☒ Certified Mail ☐ Express Mail
☐ Registered ☐ Return Receipt for Merchandise
☐ Insured Mail ☐ C.O.D.

4. Restricted Delivery? (Extra Fee) ☐ Yes

2. Article Number
(Transfer from serv 7014 0510 0001 0744 2141

PS Form 3811, February 2004 Domestic Return Receipt 102595-02-M-1540

EOG Y Resources
104 South 4th Street
Artesia, NM 88210

7014 0510 0001 0744 2158

7014 0510 0001 0744 2158

ADDRESS SERVICE RI

athie Cone
s her sole & separate property
O Box 658
Dripping Springs, TX 78620

U.S. Postal Service™
CERTIFIED MAIL™ RECEIPT
(Domestic Mail Only; No Insurance Coverage Provi)
For delivery information visit our website at www.usps.com

Postage	$
Certified Fee	
Return Receipt Fee (Endorsement Required)	
Restricted Delivery Fee (Endorsement Required)	
Total Postage & Fees	$

Postmark Here

Sent To Cathie Cone
Street, Apt. No.; or PO Box No. P. O. Box 658
City, State, ZIP+4 Dripping Spring, TX 78620

PS Form 3800, August 2006 See Reverse for Instructions

ACE SLIDER AT TOP OF ENVELOPE TO THE RIGHT OF THE RETURN ADDRESS, FOLD AT DOTTED LINE

SENDER: COMPLETE THIS SECTION

- Complete items 1, 2, and 3. Also complete item 4 if Restricted Delivery is desired.
- Print your name and address on the reverse so that we can return the card to you.
- Attach this card to the back of the mailpiece, or on the front if space permits.

1. Article Addressed to:

Cathie Cone
As her sole & separate property
P O Box 658
Dripping Springs, TX 78620

COMPLETE THIS SECTION ON DELIVERY

A. Signature
X
☐ Agent
☐ Addressee

B. Received by (Printed Name)
C. Date of Delivery

D. Is delivery address different from item 1? ☐ Yes
If YES, enter delivery address below: ☐ No

3. Service Type
☒ Certified Mail ☐ Express Mail
☐ Registered ☐ Return Receipt for Merchandise
☐ Insured Mail ☐ C.O.D.

4. Restricted Delivery? (Extra Fee) ☐ Yes

2. Article Number (Transfer from se... 7014 0510 0001 0744 2158

PS Form 3811, February 2004 Domestic Return Receipt 102595-02-M-1540

EOG Y Resources
104 South 4th Street
Artesia, NM 88210

7014 0510 0001 0744 2165

7014 0510 0001 0744 2165

ADDRESS SERVICE RE

U.S. Postal Service™
CERTIFIED MAIL™ RECEIPT
(Domestic Mail Only; No Insurance Coverage Provided)

For delivery information visit our website at www.usps.com

Postage	$
Certified Fee	
Return Receipt Fee (Endorsement Required)	
Restricted Delivery Fee (Endorsement Required)	
Total Postage & Fees	$

Postmark Here

Sent To: Tom R. Cone
Street, Apt. No.; or PO Box No.: P. O. Box 400
City, State, ZIP+4: Southwest City, MO 64863

PS Form 3800, August 2006 See Reverse for Instructions

Tom R. Cone
P O Box 400
Southwest City, MO 64863

SENDER: COMPLETE THIS SECTION

- Complete items 1, 2, and 3. Also complete item 4 if Restricted Delivery is desired.
- Print your name and address on the reverse so that we can return the card to you.
- Attach this card to the back of the mailpiece, or on the front if space permits.

1. Article Addressed to:

Tom R. Cone
P O Box 400
Southwest City, MO 64863

COMPLETE THIS SECTION ON DELIVERY

A. Signature
X
☐ Agent
☐ Addressee

B. Received by (Printed Name)

C. Date of Delivery

D. Is delivery address different from item 1? ☐ Yes
If YES, enter delivery address below: ☐ No

3. Service Type
☒ Certified Mail ☐ Express Mail
☐ Registered ☐ Return Receipt for Merchandise
☐ Insured Mail ☐ C.O.D.

4. Restricted Delivery? (Extra Fee) ☐ Yes

2. Article Number (Transfer from se 7014 0510 0001 0744 2165

PS Form 3811, February 2004 Domestic Return Receipt 102595-02-M-1540

New Mexico State Land Office
Commissioner of Public Lands
310 Old Santa Fe Trail
P.O. Box 1148
Santa Fe, New Mexico 87504-1

7014 0510 0001 0744 2189
7014 0510 0001 0744 2189

U.S. Postal Service™
CERTIFIED MAIL™ RECEIPT
(Domestic Mail Only; No Insurance Coverage Provided)

For delivery information visit our website at www.usps.com®

Dec 05 FT 12 CCM USPS

Postage	$
Certified Fee	
Return Receipt Fee (Endorsement Required)	
Restricted Delivery Fee (Endorsement Required)	
Total Postage & Fees	$

Postmark Here

Sent To NMSLO
Street, Apt. No.; or PO Box No. PO Box 1148
City, State, ZIP+4 Santa Fe, NM 87504

PS Form 3800, August 2006 See Reverse for Instructions

EOG Y Resources
104 South 4th Street
Artesia, NM 88210

SENDER: COMPLETE THIS SECTION

- Complete items 1, 2, and 3. Also complete item 4 if Restricted Delivery is desired.
- Print your name and address on the reverse so that we can return the card to you.
- Attach this card to the back of the mailpiece, or on the front if space permits.

1. Article Addressed to:

New Mexico State Land Office
Commissioner of Public Lands
310 Old Santa Fe Trail
P.O. Box 1148
Santa Fe, New Mexico 87504-1148

COMPLETE THIS SECTION ON DELIVERY

A. Signature

X

☐ Agent
☐ Addressee

B. Received by *(Printed Name)*

C. Date of Delivery

D. Is delivery address different from item 1? ☐ Yes
If YES, enter delivery address below: ☐ No

3. Service Type
☒ Certified Mail ☐ Express Mail
☐ Registered ☐ Return Receipt for Merchandise
☐ Insured Mail ☐ C.O.D.

4. Restricted Delivery? *(Extra Fee)* ☐ Yes

2. Article Number
(Transfer from se

7014 0510 0001 0744 2189

PS Form 3811. February 2004 Domestic Return Receipt 102595-02-M-1540

NM OIL CONSERVATION
ARTESIA DISTRICT
NOV 1 4 2017
RECEIVED

DISTRICT I
1625 N. French Dr., Hobbs, NM 88240
Phone (575) 393-6161 Fax: (575) 393-0720
DISTRICT II
811 S. First St., Artesia, NM 88210
Phone (575) 748-1283 Fax: (575) 748-9720
DISTRICT III
1000 Rio Brazos Rd., Aztec, NM 87410
Phone (505) 334-6178 Fax: (505) 334-6170
DISTRICT IV
1220 S. St. Francis Dr., Santa Fe, NM 87505
Phone (505) 476-3460 Fax: (505) 476-3462

State of New Mexico
Energy, Minerals and Natural Resources Department

Form C-102
Revised August 4, 2011
Submit one copy to appropriate District Office

OIL CONSERVATION DIVISION
1220 South St. Francis Dr.
Santa Fe, New Mexico 87505

☐ AMENDED REPORT

WELL LOCATION AND ACREAGE DEDICATION PLAT

API Number	Pool Code	Pool Name
30-015-44558	97565	N. Seven Rivers; Glorieta-Yeso

Property Code	Property Name	Well Number
320045	DEE STATE COM	1H

OGRID No.	Operator Name	Elevation
7377	EOG RESOURCES, INC.	3630'

Surface Location

UL or lot No.	Section	Township	Range	Lot Idn	Feet from the	SOUTH/South line	Feet from the	East/West line	County
M	36	19 S	24 E		755	SOUTH	165	WEST	EDDY

Bottom Hole Location If Different From Surface

UL or lot No.	Section	Township	Range	Lot Idn	Feet from the	SOUTH/South line	Feet from the	East/West line	County
P	36	19 S	24 E		350	SOUTH	230	EAST	EDDY

Dedicated Acres	Joint or Infill	Consolidation Code	Order No.
160			

NO ALLOWABLE WILL BE ASSIGNED TO THIS COMPLETION UNTIL ALL INTERESTS HAVE BEEN CONSOLIDATED OR A NON-STANDARD UNIT HAS BEEN APPROVED BY THE DIVISION

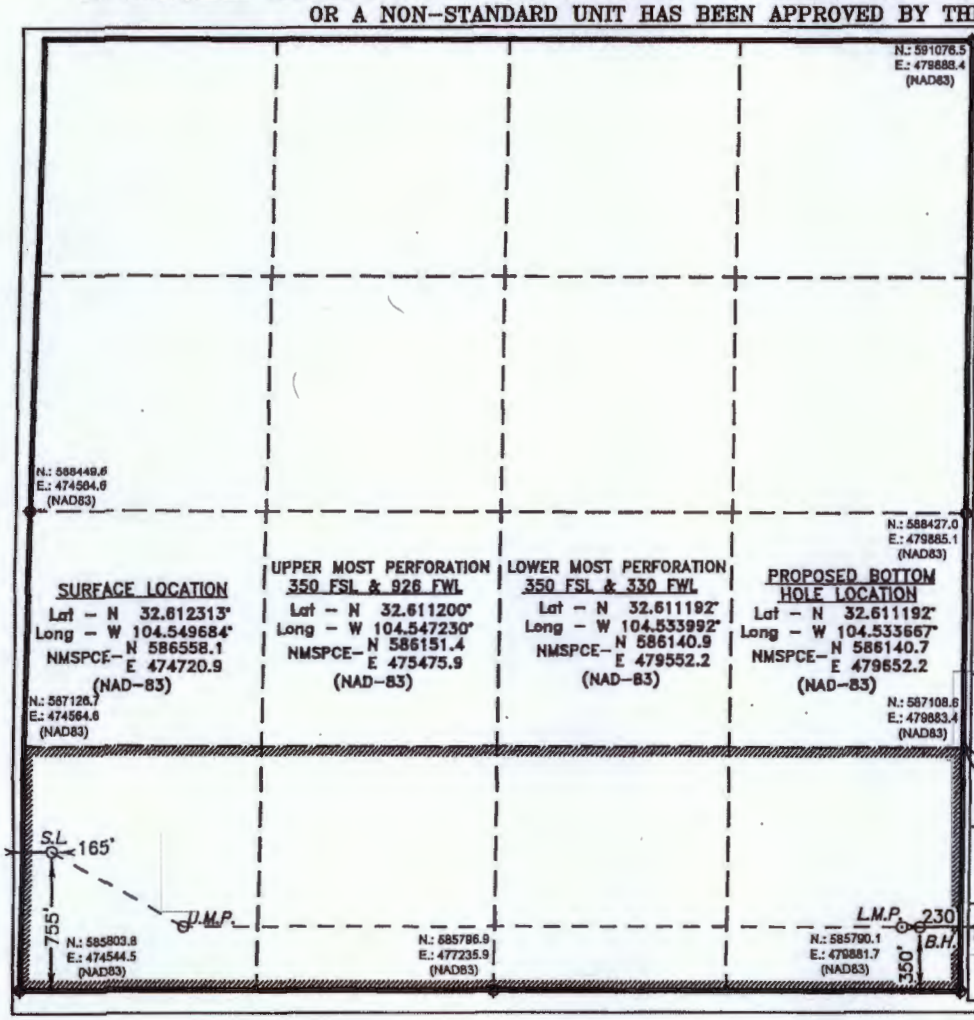

OPERATOR CERTIFICATION

I hereby certify that the information contained herein is true and complete to the best of my knowledge and belief, and that this organization either owns a working interest or unEDDYsed mineral interest in the land including the proposed bottom hole location or has a right to drill this well at this location pursuant to a contract with an owner of such a mineral or working interest, or to a voluntary pooling agreement or a compulsory pooling order heretofore entered by the division.

Tina Huerta 11/14/17
Signature Date

Tina Huerta
Printed Name

tina_huerta@eogresources.com
Email Address

SURVEYOR CERTIFICATION

I hereby certify that the well location shown on this plat was plotted from field notes of actual surveys made by me or under my supervision, and that the same is true and correct to the best of my belief.

SEPTEMBER 1, 2017
Date Surveyed

Signature & Seal of Professional Surveyor

Certificate Number 7977

0' 1000' 2000' 3000' 4000' N
SCALE: 1" = 2000'
WO Num.: 33371

DISTRICT I
1625 N. French Dr., Hobbs, NM 88240
Phone (575) 393-6161 Fax: (575) 393-0720

DISTRICT II
811 S. First St., Artesia, NM 88210
Phone (575) 748-1283 Fax: (575) 748-9720

DISTRICT III
1000 Rio Brazos Rd., Aztec, NM 87410
Phone (505) 334-6178 Fax: (505) 334-6170

DISTRICT IV
1220 S. St. Francis Dr., Santa Fe, NM 87505
Phone (505) 476-3460 Fax: (505) 476-3462

State of New Mexico
Energy, Minerals and Natural Resources Department

NM OIL CONSERVATION
ARTESIA DISTRICT
NOV 14 2017
RECEIVED

Form C-102
Revised August 4, 2011
Submit one copy to appropriate District Office

OIL CONSERVATION DIVISION

1220 South St. Francis Dr.
Santa Fe, New Mexico 87505

☐ AMENDED REPORT

WELL LOCATION AND ACREAGE DEDICATION PLAT

API Number	Pool Code	Pool Name
30-015-44563	97565	N. Seven Rivers; Glorieta-Yeso

Property Code	Property Name	Well Number
320045	DEE STATE COM	2H

OGRID No.	Operator Name	Elevation
7377	EOG RESOURCES, INC.	3630'

Surface Location

UL or lot No.	Section	Township	Range	Lot Idn	Feet from the	SOUTH/South line	Feet from the	East/West line	County
M	36	19 S	24 E		785	SOUTH	165	WEST	EDDY

Bottom Hole Location If Different From Surface

UL or lot No.	Section	Township	Range	Lot Idn	Feet from the	SOUTH/South line	Feet from the	East/West line	County
P	36	19 S	24 E		1210	SOUTH	230	EAST	EDDY

Dedicated Acres	Joint or Infill	Consolidation Code	Order No.
160			

NO ALLOWABLE WILL BE ASSIGNED TO THIS COMPLETION UNTIL ALL INTERESTS HAVE BEEN CONSOLIDATED OR A NON-STANDARD UNIT HAS BEEN APPROVED BY THE DIVISION

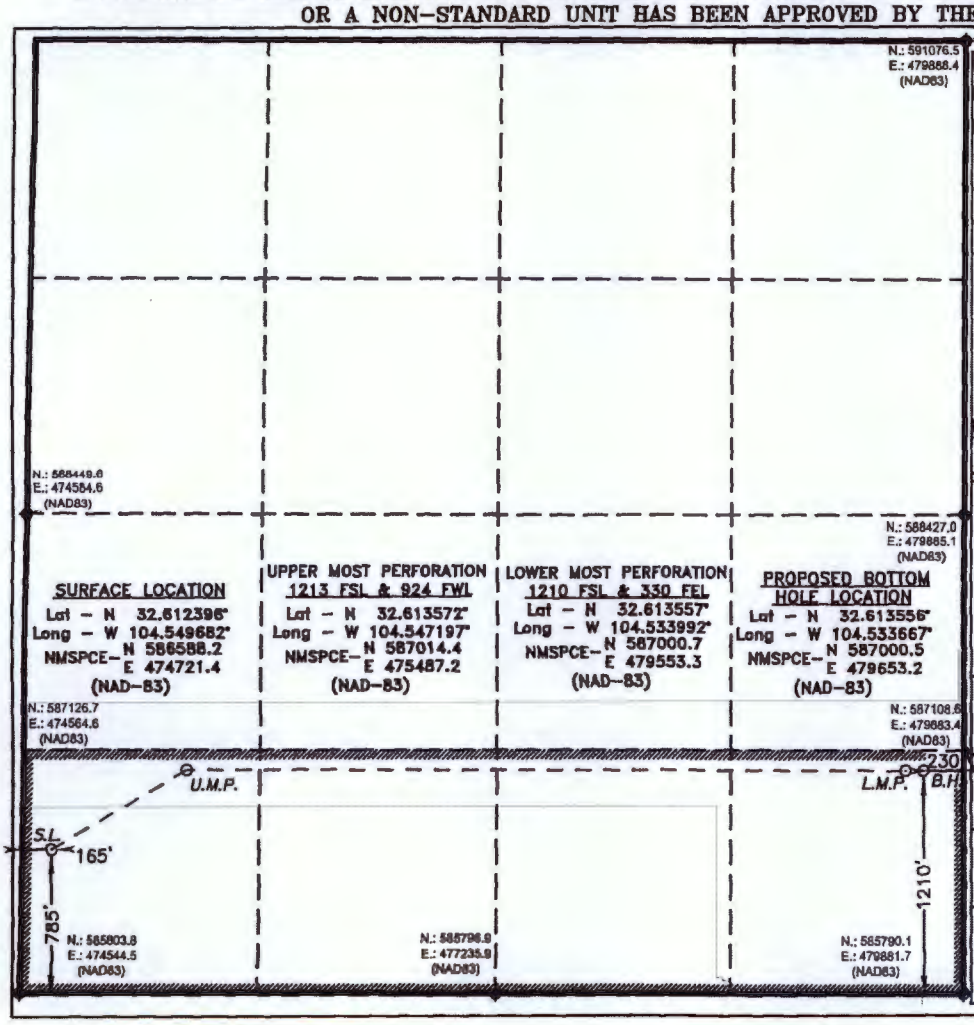

OPERATOR CERTIFICATION

I hereby certify that the information contained herein is true and complete to the best of my knowledge and belief, and that this organization either owns a working interest or unEDDYsed mineral interest in the land including the proposed bottom hole location or has a right to drill this well at this location pursuant to a contract with an owner of such a mineral or working interest, or to a voluntary pooling agreement or a compulsory pooling order heretofore entered by the Division.

Signature: Tina Huerta Date: 11-15-17

Tina Huerta
Printed Name

tina huerta@eogresources.com
Email Address

SURVEYOR CERTIFICATION

I hereby certify that the well location shown on this plat was plotted from field notes of actual surveys made by me or under my supervision, and that the same is true and correct to the best of my belief.

SEPTEMBER 20, 2017
Date Surveyed

Signature & Seal of Professional Surveyor

NEW MEXICO PROFESSIONAL SURVEYOR 7977 GARY L. JONES

Certificate Number Gary L. Jones 7977

0' 1000' 2000' 3000' 4000'
SCALE: 1" = 2000'
WO Num.: 33371

McMillan, Michael, EMNRD

From: Miriam Morales <Miriam_Morales@eogresources.com>
Sent: Tuesday, January 16, 2018 11:41 AM
To: McMillan, Michael, EMNRD
Subject: RE: Dee State Com Well No. 1H surface commingle application

I apologize for the late response but our Landman is out on vacation. I can't get you the letter right now until she gets back, but I asked some questions and the battery is located on Unit I.

From: McMillan, Michael, EMNRD [mailto:Michael.McMillan@state.nm.us]
Sent: Wednesday, January 10, 2018 3:19 PM
To: Miriam Morales <Miriam_Morales@eogresources.com>
Subject: RE: Dee State Com Well No. 1H surface commingle application

** External email. Use caution.**
Actually get a signed statement from a landman.

Also, in your letter to the working interest owners, state that additional wells in this lease and pool maybe added with a Sundry notice.
E-mail Stan Wagner for the proper verbiage.

Mike

From: McMillan, Michael, EMNRD
Sent: Wednesday, January 10, 2018 3:07 PM
To: 'miriam_morales@eogresources.com' <miriam_morales@eogresources.com>
Subject: Dee State Com Well No. 1H surface commingle application

Miriam:
Hope things are going good. I have not heard from you in a while.

Can you provide the Unit Letter in Section 35, where the surface commingle facility is located?

Thanks

Mike

Michael McMillan
1220 South St. Francis
Santa Fe, New Mexico
505-476-3448
Michael.mcmillan@state.nm.us

To whom it may concern:

The ownership of the following wells and associated pools are identical in working, royalty, and overriding royalty interest and percentages.

Well Name: Dee State Com #1H
Formation: N. Seven Rivers; Glorietta-Yeso

Well Name: Dee State Com #2H
Formation: N. Seven Rivers; Glorietta-Yeso

I certified that this information is true to the best of my knowledge.

Landman

McMillan, Michael, EMNRD

From: Miriam Morales <Miriam_Morales@eogresources.com>
Sent: Tuesday, February 13, 2018 11:22 AM
To: McMillan, Michael, EMNRD
Subject: RE: Dee State Com Well No. 1H surface commingle application

Unit I.

From: McMillan, Michael, EMNRD [mailto:Michael.McMillan@state.nm.us]
Sent: Tuesday, February 13, 2018 11:22 AM
To: Miriam Morales <Miriam_Morales@eogresources.com>
Subject: RE: Dee State Com Well No. 1H surface commingle application

** External email. Use caution.**
What Unit letter in Section 35 is the surface facility located?
Mike

From: Miriam Morales [mailto:Miriam_Morales@eogresources.com]
Sent: Tuesday, February 13, 2018 9:50 AM
To: McMillan, Michael, EMNRD <Michael.McMillan@state.nm.us>
Subject: RE: Dee State Com Well No. 1H surface commingle application

Here you are, finally. Let me know if you need anything else.

From: McMillan, Michael, EMNRD [mailto:Michael.McMillan@state.nm.us]
Sent: Tuesday, January 16, 2018 11:42 AM
To: Miriam Morales <Miriam_Morales@eogresources.com>
Subject: RE: Dee State Com Well No. 1H surface commingle application

** External email. Use caution.**
Thanks
Mike

From: Miriam Morales [mailto:Miriam_Morales@eogresources.com]
Sent: Tuesday, January 16, 2018 11:41 AM
To: McMillan, Michael, EMNRD <Michael.McMillan@state.nm.us>
Subject: RE: Dee State Com Well No. 1H surface commingle application

I apologize for the late response but our Landman is out on vacation. I can't get you the letter right now until she gets back, but I asked some questions and the battery is located on Unit I.

From: McMillan, Michael, EMNRD [mailto:Michael.McMillan@state.nm.us]
Sent: Wednesday, January 10, 2018 3:19 PM
To: Miriam Morales <Miriam_Morales@eogresources.com>
Subject: RE: Dee State Com Well No. 1H surface commingle application

** External email. Use caution.**
Actually get a signed statement from a landman.