06/27/12		Jones, W	06/27/2012	TYPE SWD	pJDO121795 7405

Case Date 10/27/12
Protest with 9/19/12

1364

NEW MEXICO OIL CONSERVATION DIVISION
- Engineering Bureau -
1220 South St. Francis Drive, Santa Fe, NM 87505

RECEIVED OCD
2012 JUN 27 P 2:20

ABOVE THIS LINE FOR DIVISION USE ONLY

ADMINISTRATIVE APPLICATION CHECKLIST

THIS CHECKLIST IS MANDATORY FOR ALL ADMINISTRATIVE APPLICATIONS FOR EXCEPTIONS TO DIVISION RULES AND REGULATIONS WHICH REQUIRE PROCESSING AT THE DIVISION LEVEL IN SANTA FE

Application Acronyms:

[NSL-Non-Standard Location] [NSP-Non-Standard Proration Unit] [SD-Simultaneous Dedication]
[DHC-Downhole Commingling] [CTB-Lease Commingling] [PLC-Pool/Lease Commingling]
[PC-Pool Commingling] [OLS - Off-Lease Storage] [OLM-Off-Lease Measurement]
[WFX-Waterflood Expansion] [PMX-Pressure Maintenance Expansion]
[SWD-Salt Water Disposal] [IPI-Injection Pressure Increase]
[EOR-Qualified Enhanced Oil Recovery Certification] [PPR-Positive Production Response]

[1] **TYPE OF APPLICATION** - Check Those Which Apply for [A]

OGRID 290484
API 30-025-37582
Name Brinnstool 25 Fed #1
Located H 25 23S 33E

[A] Location - Spacing Unit - Simultaneous Dedication
☐ NSL ☐ NSP ☐ SD

Check One Only for [B] or [C]

[B] Commingling - Storage - Measurement
☐ DHC ☐ CTB ☐ PLC ☐ PC ☐ OLS ☐ OLM

[C] Injection - Disposal - Pressure Increase - Enhanced Oil Recovery
☐ WFX ☐ PMX X SWD ☐ IPI ☐ EOR ☐ PPR

[D] Other: Specify _____

Delaware Water Company LLC

[2] **NOTIFICATION REQUIRED TO:** - Check Those Which Apply, or ☐ Does Not Apply

[A] ☐ Working, Royalty or Overriding Royalty Interest Owners

[B] X Offset Operators, Leaseholders or Surface Owner

[C] X Application is One Which Requires Published Legal Notice

[D] X Notification and/or Concurrent Approval by BLM or SLO
U.S. Bureau of Land Management - Commissioner of Public Lands, State Land Office

[E] ☐ For all of the above, Proof of Notification or Publication is Attached, and/or,

[F] ☐ Waivers are Attached

[3] **SUBMIT ACCURATE AND COMPLETE INFORMATION REQUIRED TO PROCESS THE TYPE OF APPLICATION INDICATED ABOVE.**

[4] **CERTIFICATION:** I hereby certify that the information submitted with this application for administrative approval is **accurate** and **complete** to the best of my knowledge. I also understand that **no action** will be taken on this application until the required information and notifications are submitted to the Division.

Note: Statement must be completed by an individual with managerial and/or supervisory capacity.

Kay Havenor	Kay C Havenor	Agent	6/23/2012
Print or Type Name	Signature	Title	Date

KHavenor@georesources.com
e-mail Address

STATE OF NEW MEXICO
ENERGY, MINERALS AND NATURAL
RESOURCES DEPARTMENT

Oil Conservation Division
1220 South St. Francis Dr.
Santa Fe, New Mexico 87505

FORM C-108
Revised June 10, 2003

APPLICATION FOR AUTHORIZATION TO INJECT

I. PURPOSE: _____ Secondary Recovery _____ Pressure Maintenance ___X___ Disposal _____ Storage
Application qualifies for administrative approval? ___X___ Yes _____ No

II. OPERATOR: Delaware Water Company, LLC, OGRID 290484

ADDRESS: P.O. Box 1244, Jal, NM 88252

CONTACT PARTY: Kay Havenor PHONE: 575-626-4518

III. WELL DATA: Complete the data required on the reverse side of this form for each well proposed for injection. Additional sheets may be attached if necessary.

IV. Is this an expansion of an existing project? _____ Yes ___X___ No
If yes, give the Division order number authorizing the project: _____

V. Attach a map that identifies all wells and leases within two miles of any proposed injection well with a one-half mile radius circle drawn around each proposed injection well. This circle identifies the well's area of review.

VI. Attach a tabulation of data on all wells of public record within the area of review which penetrate the proposed injection zone. Such data shall include a description of each well's type, construction, date drilled, location, depth, record of completion, and a schematic of any plugged well illustrating all plugging detail.

VII. Attach data on the proposed operation, including:

1. Proposed average and maximum daily rate and volume of fluids to be injected;
2. Whether the system is open or closed;
3. Proposed average and maximum injection pressure;
4. Sources and an appropriate analysis of injection fluid and compatibility with the receiving formation if other than reinjected produced water; and,
5. If injection is for disposal purposes into a zone not productive of oil or gas at or within one mile of the proposed well, attach a chemical analysis of the disposal zone formation water (may be measured or inferred from existing literature, studies, nearby wells, etc.).

*VIII. Attach appropriate geologic data on the injection zone including appropriate lithologic detail, geologic name, thickness, and depth. Give the geologic name, and depth to bottom of all underground sources of drinking water (aquifers containing waters with total dissolved solids concentrations of 10,000 mg/l or less) overlying the proposed injection zone as well as any such sources known to be immediately underlying the injection interval.

IX. Describe the proposed stimulation program, if any.

*X. Attach appropriate logging and test data on the well. (If well logs have been filed with the Division, they need not be resubmitted).

*XI. Attach a chemical analysis of fresh water from two or more fresh water wells (if available and producing) within one mile of any injection or disposal well showing location of wells and dates samples were taken.

XII. Applicants for disposal wells must make an affirmative statement that they have examined available geologic and engineering data and find no evidence of open faults or any other hydrologic connection between the disposal zone and any underground sources of drinking water.

XIII. Applicants must complete the "Proof of Notice" section on the reverse side of this form.

XIV. Certification: I hereby certify that the information submitted with this application is true and correct to the best of my knowledge and belief.

NAME: Kay Havenor TITLE: Agent

SIGNATURE: Kay Havenor DATE: 6/20/2012

E-MAIL ADDRESS: KHavenor@georesources.com 575-626-4518

* If the information required under Sections VI, VIII, X, and XI above has been previously submitted, it need not be resubmitted. Please show the date and circumstances of the earlier submittal: _____

DISTRIBUTION: Original and one copy to Santa Fe with one copy to the appropriate District Office

III. WELL DATA

A. The following well data must be submitted for each injection well covered by this application. The data must be both in tabular and schematic form and shall include:

(1) Lease name; Well No.; Location by Section, Township and Range; and footage location within the section.

(2) Each casing string used with its size, setting depth, sacks of cement used, hole size, top of cement, and how such top was determined.

(3) A description of the tubing to be used including its size, lining material, and setting depth.

(4) The name, model, and setting depth of the packer used or a description of any other seal system or assembly used.

Division District Offices have supplies of Well Data Sheets which may be used or which may be used as models for this purpose. Applicants for several identical wells may submit a "typical data sheet" rather than submitting the data for each well.

B. The following must be submitted for each injection well covered by this application. All items must be addressed for the initial well. Responses for additional wells need be shown only when different. Information shown on schematics need not be repeated.

(1) The name of the injection formation and, if applicable, the field or pool name.

(2) The injection interval and whether it is perforated or open-hole.

(3) State if the well was drilled for injection or, if not, the original purpose of the well.

(4) Give the depths of any other perforated intervals and detail on the sacks of cement or bridge plugs used to seal off such perforations.

(5) Give the depth to and the name of the next higher and next lower oil or gas zone in the area of the well, if any.

XIV. PROOF OF NOTICE

All applicants must furnish proof that a copy of the application has been furnished, by certified or registered mail, to the owner of the surface of the land on which the well is to be located and to each leasehold operator within one-half mile of the well location.

Where an application is subject to administrative approval, a proof of publication must be submitted. Such proof shall consist of a copy of the legal advertisement which was published in the county in which the well is located. The contents of such advertisement must include:

(1) The name, address, phone number, and contact party for the applicant;

(2) The intended purpose of the injection well; with the exact location of single wells or the Section, Township, and Range location of multiple wells;

(3) The formation name and depth with expected maximum injection rates and pressures; and,

(4) A notation that interested parties must file objections or requests for hearing with the Oil Conservation Division, 1220 South St. Francis Dr., Santa Fe, New Mexico 87505, within 15 days.

NO ACTION WILL BE TAKEN ON THE APPLICATION UNTIL PROPER PROOF OF NOTICE HAS BEEN SUBMITTED.

NOTICE: Surface owners or offset operators must file any objections or requests for hearing of administrative applications within 15 days from the date this application was mailed to them.

Side 1

INJECTION WELL DATA SHEET

OPERATOR: Delaware Water Company, LLC OGRID: 290484

WELL NAME & NUMBER: Brininstool 25 Federal No. 1

WELL LOCATION: 1980' FNL & 660' FEL H 25 23S 33E

FOOTAGE LOCATION	UNIT LETTER	SECTION	TOWNSHIP	RANGE

WELLBORE SCHEMATIC

See attached well diagram

WELL CONSTRUCTION DATA

Surface Casing

Hole Size: 17-½" Casing Size: 13-⅜" 48# J-55 @865'

Cemented with: 490 +250 sx. *or* _____ ft³

Top of Cement: Surface Method Determined: Cmt +1" 250 sx

Intermediate Casing

Hole Size: 12-¼" Casing Size: ~~13-⅜"~~ 9-5/8 @ 5,127'

Cemented with: 1700 sx. *or* _____ ft³

Top of Cement: Surface Method Determined: Circulated

Production Casing

Hole Size: 8-⅜" DV @ 7992' Casing Size: 7" 26# P-110 @ 11,908

Cemented with: 1315 sx. *or* _____ ft³

Top of Cement: Surface Method Determined: Circulated Below (above 4500')

Side 2

Production Liner

Hole Size: 8-¾" Casing Size: 7" 26# P-110

Cemented with: 1415 sx. *or* _____ ft³

Top of Cement: Opr Estimate 4500" Method Determined: Unknown

Production Liner #2

@14033'

Hole Size: 6-⅛" Casing Size: 4-½" 13.5# P-110 LTC

(TOCC 10380)

Cemented with: 275 sx. *or* _____ ft³

Top of Cement: 10380' Method Determined: Opr CBL

See attached well diagram

Injection Interval

Perfs 5,223' - 7,380' (OA)

(Perforated or Open Hole; indicate which)

INJECTION WELL DATA SHEET

Tubing Size: 2-⅞" N-80 6.4# non-upset or 2-⅜" 4.7# N-80 upset Lining Material: Fiberglass coated

Type of Packer: Lok-Set or equivalent

Packer Setting Depth: Approx 5173 ft

Other Type of Tubing/Casing Seal (if applicable): _____

Additional Data

1. Is this a new well drilled for injection? ____ Yes ___X___ No,

   If no, for what purpose was the well originally drilled? Morrow test

2. Name of the Injection Formation: Delaware Bell Canyon Fm and Cherry Canyon Fm.

3. Name of Field or Pool (if applicable): _____

4. Has the well ever been perforated in any other zone(s)? List all such perforated intervals and give plugging detail, i.e. sacks of cement or plug(s) used. Yes. See well diagram on page 16.

5. Give the name and depths of any oil or gas zones underlying or overlying the proposed injection zone in this area: Productive and depleted wells east and south in underlying Bone Springs, and Morrow - both P&A and producers outside the AOR to north, east, and south.

Plugging diagram of Chesapeake Brininstool 25 Federal #1

WELLBORE SCHEMATIC
CHESAPEAKE OPERATING, INC

WELL : BRININSTOOL 25 FEDERAL #1
FIELD : BELL LAKE (MORROW) GRAMA RIDGE PROJECT AREA
COUNTY : LEA STATE : NM
LOCATION : 1,980' FNL & 660' FEL, SEC. 25-23S-33E
ELEVATION : GL 3,626' KB 3,652'

API #: 30-025-37582
SPUD DATE: 1/29/06
RIG REL. DATE: 3/27/06

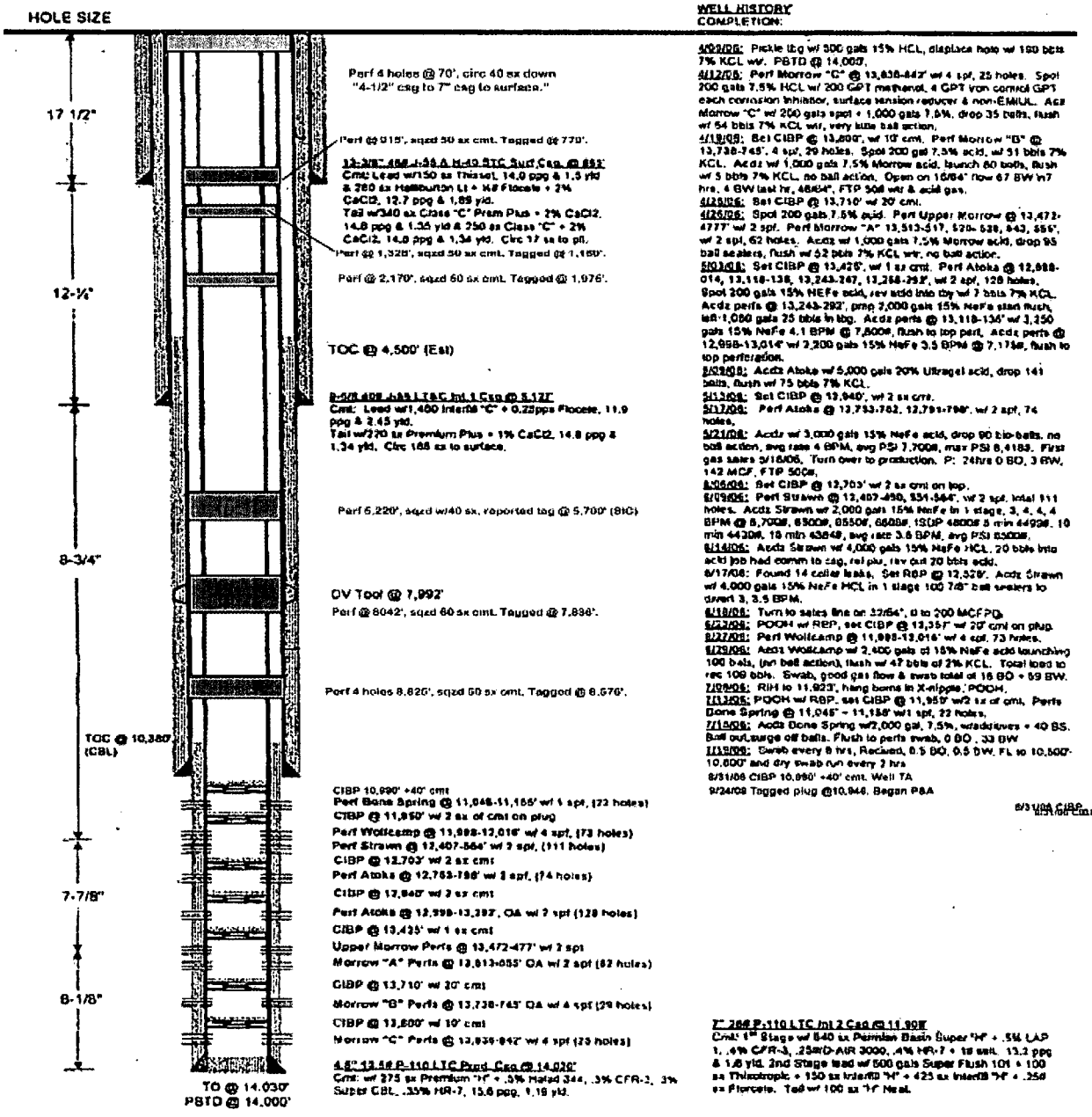

Proposed Re-entry and SWD Completion Diagram

API:	3002537582				
Operator:	Delaware Water Company, LLC.				
Lease:	Brininstool 25 Federal	Well No:	1	KB:	3652
Location:	~~Sec 10, T25S-R32E~~ Lea Co., NM			GL:	3636
Footage:	~~2080 FNL, 760 FWL~~			Spud date:	January 29, 2006
				Plugged :	October 10, 2008
				MSL of TD:	-10394

Surface Csg

Size:	13-3/8" 48# H-40
Set @:	865
Sxs cmt:	740
Circ:	TOC 140'+1" 250 sx
TOC:	Surf
Hole Size:	17-1/2"

Intermediate Csg

Size:	9-5/8" 40# J-55
Set @:	5,127
Sxs cmt:	1700
Circ:	188 sx to surface
TOC:	Surf
Hole Size:	12-1/4"

2nd Intermediate Csg

Size:	7" 26# P-110 LTC
Set @:	11908
Sxs cmt:	2005
Circ:	No
Hole Size:	8-3/4"

Production Csg

Size:	4-1/2" 13.5# P-110 LTC
Set @:	12538-15769'
Sxs cmt:	350
Circ:	NR-Calc 45% excess
Hole Size:	6-1/8"

Tubular requirements (made-up):
5173' 2-7/8" N-80 6.4# non-upset Fiberglass coated
or 5173' 2-3/8" N-80 upset Fiberglass coated
Lok-Set packer or equivalent approx 5173'

Perforate selectively 5223'-7380' (OA)
Acidize OA approx 10,000 gal 15% HCl
Load tubing annulus w/corrosion inhibitor
Complete surface head for disposal

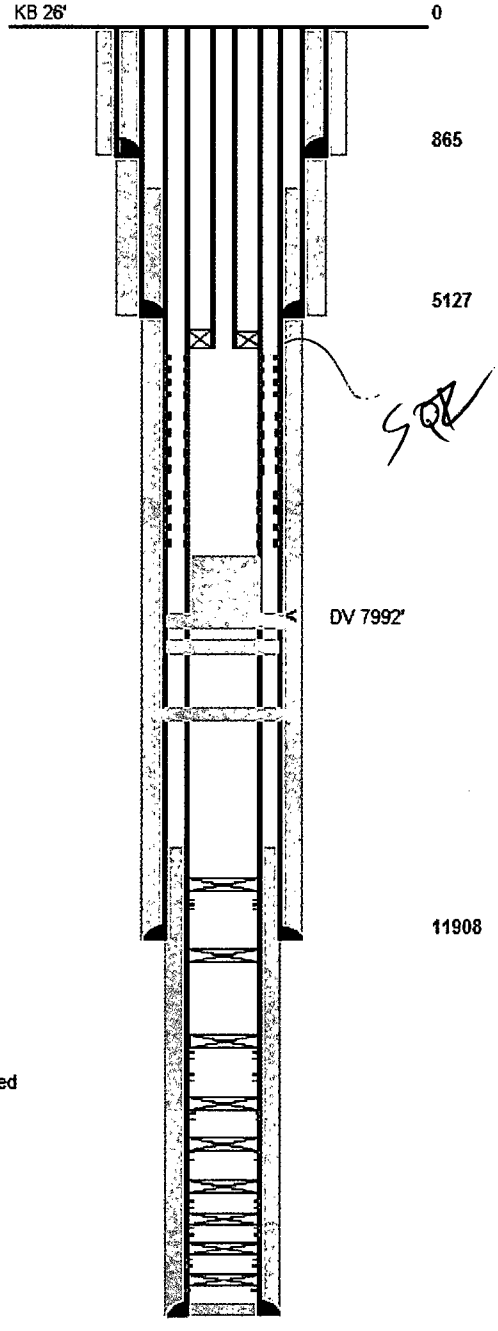

Not to Scale

TOC 7" 3820'
B/Salt 5080'
Top Lamar Ls5152'
Injection packer 5173'

Perfs (OA) 5223' - 7380'

Set cmt plug 7530' - 7836' 25 sx
T/Brushy Canyon 7487'

Orig perf 8042' P&A cmt 8042'-7836'
T/Bone Springs 8725'
Orig 4-perfs 8825' sqzd w/50 sx

TOC 10380' CBL
CIBP +40 sx cmt 10990' Well TA
Perfs Bone Springs 11045'-11155
CIBP 11950' +2 sx

CIBP 12357' +20' cmt Perfs Wolfcamp 11998'-12016'
Perfs Strawn 12407'-564' OA
CIBP 12703' +2 sx cmt Perfs Strawn 12753'-798'
CIBP 12940' +2 sx cmt Perfs Atoka 12998'-13292' OA

CIBP 13425 +1 sx cmt Perfs13472'-477'
CIBP 13710' +20' cmt Perfs Morrow 13738'-745'
CIBP 13,800 +10' cmt Perfs Morrow 13835'-842'
Dry in tests

Delaware Water Co., LLC
1980' FNL & 660' FEL
Sec. 25, T23S-R33E
Lea County, NM

API 30-025-37582

SPOT10 Satellite and Matching Topographic Map

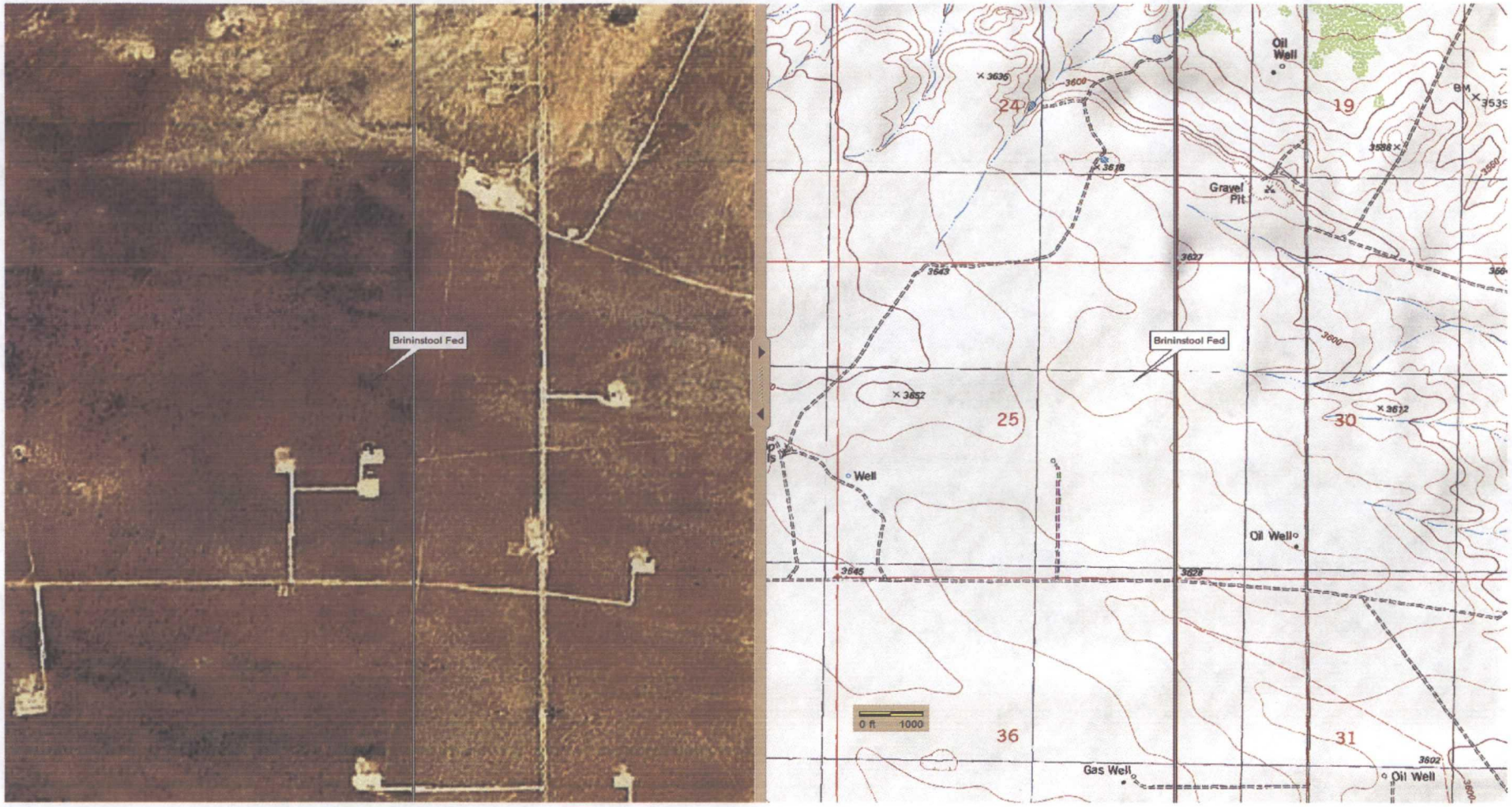

Delorme XMap6

From the junction of NM-128 and Lea Co. CR-2 (Delaware Basin Rd) north 1.6 miles and west 0.5 miles.

Delaware Water Co., LLC
1980' FNL & 660' FEL
Sec. 25, T23S-R33E
Lea County, NM

API 30-025-37582

Item VII:

1. The maximum injected volume anticipated is 5,000 BWPD. Average anticipated is 3,500 BWPD.
2. Injection will be through a closed system.
3. Maximum injection pressure is expected to be 1044 psi.
4. Sources will be produced water. These will be compatible with known waters in the disposal zones.
5. Water sample analyses from the Continental Oil Co. Bell Lake Unit No. 9, Unit K, Sec. 18, T23S-R34E, Lea Co., is shown below, TDS over 130,700 mg/l (Source: NM WAIDS) for the Bone Springs located 2-miles NNE of the proposed re-entry.

NM WAIDS

DATA MAPS HOME SCALE CORROSION

Water Samples for Well BELL LAKE UNIT 009
API = 3002520261
Formation = B SPG
Field = BELL LAKE NORTH

Instructions:

Click — For general information about this sample.

Click — For scale calculation pages (Stiff-Davis or Oddo Tomson methods).

Click — To select this water sample for water mixing. It will lead to the main page, and add the sample ID to the mixing table.

Click 664 — Click the hyperlinked sample number to make a .csv for that sample, or select several check boxes and click Submit for multiple samples

The ions are in (mg/L) units.

	SampleID	T	R	S	SO4	CL	CO3	HCO3	K	Na	Ca	Mg
	3943	23S	34E	18	260	130000	null	512	null	null	null	null

SELECT/DESELECT ALL

Submit

New Mexico Tech PRRC

Disposal water into this well will be chemically compatible with those in the proposed disposal interval.

Item VIII:

Disposal will be into the Delaware Mountain Group Bell Canyon and Cherry Canyon Formations. The Delaware is composed predominately of sandstones, and shales. All the Delaware members are interbedded sandstones and shales with occasional dense dolomite horizons. The lateral transmissivities of the sandstone beds are highly variable and often form selective barriers to the movement of hydrocarbons while allowing down-gradient movement of water. The transmissivity variations are fundamentally due to 1) the very-fine grained nature of the sands and 2) the local percentage of silt and clay. The Delaware sandstone members are typically overlain and underlain by bounding shale, dolomite, and/or silty shale horizons. The depth to the Delaware Mountain Group (top of Lamar) in this well is 5,152'. The top of Brushy Canyon Formation is 7,487'. The base of the Delaware (top of Bone Springs Formation) is at 8,725'.

There are no reported fresh, potable or stock water within a 2-mile radius. Records from the New Mexico Office of the State Engineer on 6/16/2012 show no known water wells within a 5-mile radius of the proposed Delaware Water Company SWD well. Any unreported stock water wells, if present, are estimated to be less than 150' deep.

New Mexico Office of the State Engineer

Water Column/Average Depth to Water

(quarters are 1=NW 2=NE 3=SW 4=SE)
(quarters are smallest to largest) (NAD83 UTM in meters)

No records found.

Basin/County Search:

Basin: Lea County

UTMNAD83 Radius Search (in meters):

Easting (X): 639737 **Northing (Y):** 3552625 **Radius:** 3220

The data is furnished by the NMOSE/ISC and is accepted by the recipient with the expressed understanding that the OSE/ISC make no warranties, expressed or implied, concerning the accuracy, completeness, reliability, usability, or suitability for any particular purpose of the data.

6/16/12 3:46 PM

WATER COLUMN/ AVERAGE DEPTH TO WATER

The surface geology of the greater area, including the 2-mile radius as shown in Item V above, is Quaternary eolian and piedmont deposits of Holocene to middle Pleistocene age. These are underlain by the Permian Rustler Formation and Permian evaporites. Formation tops are listed below in Ancillary Information.

Item IX:

Acidize open-hole Delaware between 5,223' and 7,380' with 15% HCl or as determined in initial testing.

Item X:

Logs ran in open hole are commercially available and on file with the OCD.

Item XI:

No known water wells are located in the 2-mile area surrounding the proposed disposal. Please note Item VIII above.

Item XII:

There is no geological evidence of open faults or hydrologic connection between the disposal zone and any possible underground sources of protectable water.

Ancillary Information:

Electric logs show low resistivities in porous sandstone zones in this and nearby wells thereby indicating high formation water contents. Attempted completions/tests in the intended injection interval in AOR wells found no potentially commercial oil or gas.

Formation depths:

T/Rustler	860'
Salado	1282'
T/Salt	3520'
B/Salt	5080'
Lamar	5152'
Bell Canyon	5184'
Cherry Canyon	6008'
Brushy Canyon	7487'
Bone Springs	8725'

Item V:

Area of Review
2-Mile Radius and ½ -Mile AOR

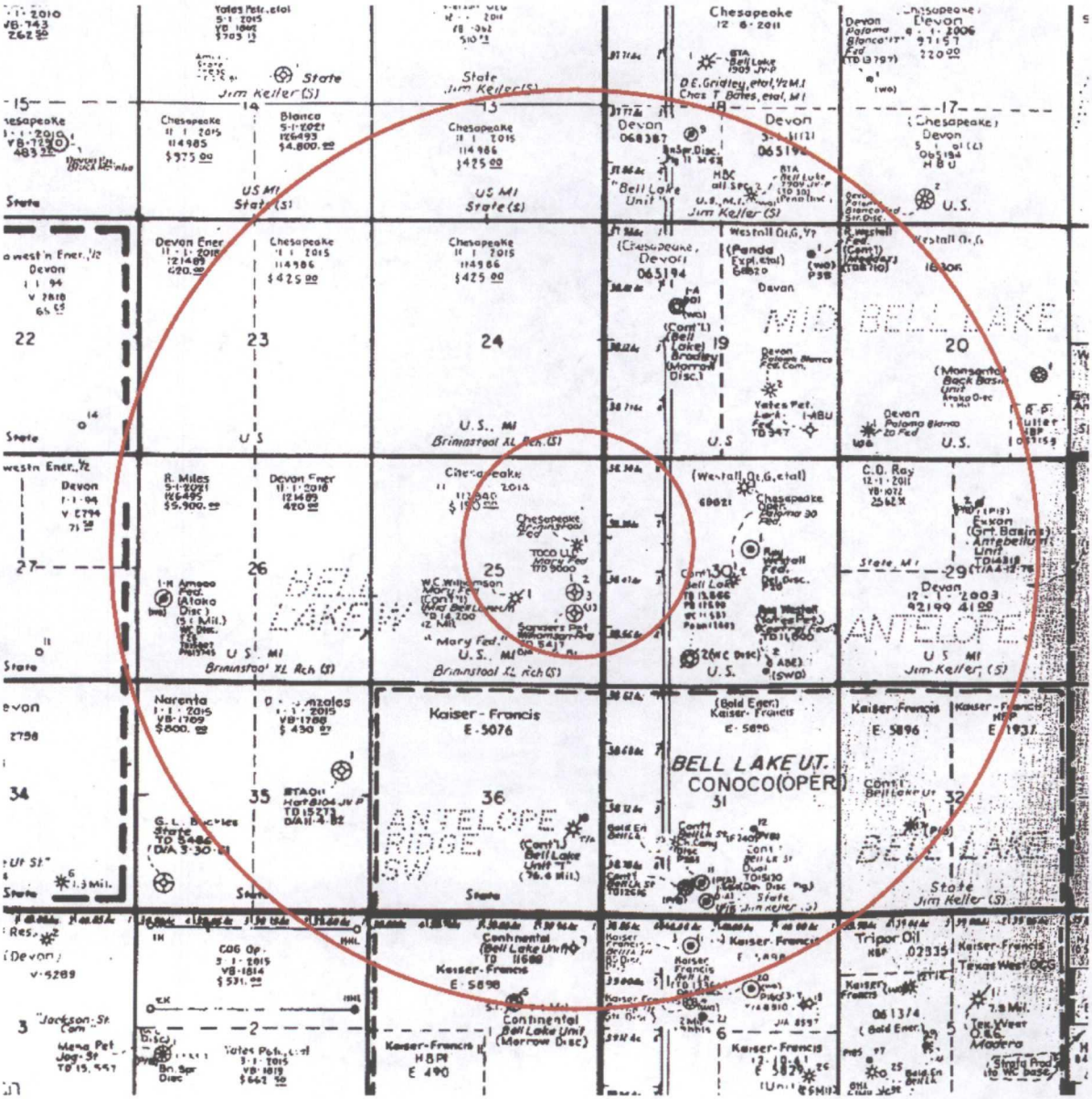

Delaware Water Co., LLC
1980' FNL & 660' FEL
Sec. 25, T23S-R33E
Lea County, NM

API 30-025-37582

Item VI: Data on wells in AOR.

All wells in AOR that penetrate the proposed disposal interval:

API	WELL_NAME	STATUS	SDIV	SEC	TWN	RANGE	FTG	NS	FTG	EW	OCD	OPERATOR	LAND	WELL	PLUG DATE	SPUD DATE	ELEVGL	TVD
3002537582	BRININSTOOL 25 FEDERAL 001	Plugged	H	25	23S	33E	1980	N	1980	E	H	CHESAPEAKE OPERATING, INC.	F	G	10-Oct-08	29-Jan-06	3625	14040
3002527479	MARY FEDERAL 003	Plugged	I	25	23S	33E	1650	S	1650	E	I	C W TRAINER	F	G	19-May-00	07-Jul-81	3632	5417
3002534762	MARY FEDERAL 002	Plugged	I	25	23S	33E	2130	S	2130	E	I	C W TRAINER	F	G	04-Apr-03	01-May-00	3631	7770
3002525473	MARY FEDERAL 001	Plugged	J	25	23S	33E	1980	S	1980	E	J	C W TRAINER	F	G	16-May-00	26-Mar-77	3636	14200

3002537582 Target re-entry

Item VI(a): Construction of wells in the AOR that penetrate the proposed disposal zone:

1. 30-025-37582 Chesapeake Operating, Inc. Brininstool 25 Federal #1, Unit H-Sec. 25-T23S-R33E GL 3625. Spudded 1/29/2006. 17½" hole set 13⅜" 48# H-40 set @865' w/490 sx +250 sx by 1" to surface. 12¼" hole set 9⅝" 40# J-55 @5,127' w/1700 sx circ 188 sx to surface. 8¾ hole set 7" 26# P-110 @11,908' DV @7,992' w/640 sx circ 226 sx then 775 sx thru DV, Opr est TOC 4,500'. 6⅛" hole set 4½" 13.5# P-110 @ 14,033' w/275 sx, TOC @ 10,380' (CBL). Completion and testing shown in detail on P&A diagram page 16.

2. 30-025-25473 C.W. Trainer Mary Federal #1, Unit J Sec. 25-T23S-R33E. GL 3636. Spudded 3/26/1977. 26" surface hole set 20" 94# @703' w/328 sx plus 700 sx by 1", circ 50 sx. 14¾" hole set 10¾" 40.5, 45.5, 51# J-55 @5,150' w/3065 sx, circ 75 sx to surface. 9½" hole set 7⅝" 33.7# @12,087' w/1200 sx, TOC 8,320' TS. Operator set 50 sx 12,600'-12,700', 50 sx 12,700'-12,800', 50 sx 12,400'-12,500', 75 sx 12,000'-12,140'. Continental took operations. Set CIBP @9,000' + 2 sx cmt. Perf 8,420' w/4 jspf, sqzd 125 sx 8,380'-8,430'. Perf 8,492'-8,500' w/2 jspf, acid 1000 gal. Swabbed 19 bbls w/35% oil. Retainer 8,401', pumped 150 sx below +9 sx on top. Set retainer 4,965' w/100 sx below +10' cmt on top. Shot 7⅝" @3,773' and pulled. 50 sx "H" @3,840'm 125 sx "H" @1,400'. 20 sx "C" @surface. P&A 2/21/1978. Re-entered J.C. Williamson 8/18/1980. Completed Atoka 12,908'-13,498' OA. Bottom csg leak. CIBP 13,600' +17' cmt. Reset CIBP w/20' cmt. PBTD 13,580'. Sqzd 160 sx behind pipe 12,640'-12,650' (leak). CO to 13,480' Set CIBP 13,470' +17' cmt. Acid perfs 12,908'-12,930'. C.W. Trainer became Operator 6/7/1999. Set 5½" CIBP @11,673'. Set 25 sx,11,421'-11,673'. Cut 5½" @10,700' and pulled. Set 50 sx plug 7,150', tagged @6,897'. 40 sx plug @3.933', tagged @3,823'. 5/16/200 set 50 sx plug @754' w/TOC @ 561'. 20 sx plug 61' to 3'. P&A.

SHOULD BE EASY RE-ENTER

3. 30-025-34762 C.W. Trainer Mary Federal #2, Unit I Sec. 25-T23S-R33E. 2310' FSL & 660' FEL. GL 3631. Spudded 11/8/1999. 20" surface hole set 14" 60# @70' w/60 sx , cmt to surface. 13½" hole set 10¾" 40.5# @704' w/280 sx, circulated. 8¾ hole set 7⅛" @5,155' w/511 sx, TOC NR. 6½" hole set 4½" @9,000' w/510 sx, TOC 5,130' CBL. Perf Bone Springs 40 shots 8,724'-8,873'. Non-commercial. 4½" CIBP @8,610' +25 sx cmt. Perf Brushy Canyon 8,339'-8,452' w/20 shots 0.41". Frac 22,650 gal +81,000# plus 20/40 sd. Set RBP 8,250'. Perf Brushy Canyon 7,982'-8,019' 20 shots 0.41", frac 29,198 gal + 80,000# 20/40 sd. Not commercial. Set CIBP 7,770'. Perf 20 holes 7,320'-7,355'l, acid 20,000 gal 15%. Put on pump, all water. BP @7,77'0' +25 sx to 7,392'. CIBP 7,270' +25 sx to 6,892'. Cut 4½" @5,240'. 85 sx cmt @5,290', tagged @4,985'. 40 sx 2,200' to 2,004'. 25 sx 1,500' to 1,378'. 25 sx 734' to 632'. Surface plug (cmt amt not reported) P&A 4/4/2003.

4. 30-025-27479 C.W. Trainer (TOC, LLC) Mary Federal #3, Unit I Sec. 25-T23S-R33E. Spudded 7/7/1981. 20" surface hole to 38' set 16" conductor pipe w/6 sx Redi-Mix. 8-5/8" 24# K-55 set @1,300' w/650 sx (TS 520') +1" w/400 sx cmt, circ 40 sx to surface. Set 4-1/2" 10.5# K-55 @5.412' w/300 sx. TOC 4,130' TS. Perf 5,337'-5,349' w/2 jspf. Swb 15 bbls SW/hr, Cl=190,000 mg/l, trace oil, show gas. Set CIBP 5,328' +15'cmt. PBTD 5,313'. Perf 5,275'-5,289' w/2 jspf. Swb 10 bbls SW/hr, Cl=193,000 mg/l, w/trace oil, show gas. Set CIBP 5,150' +35 sx cmt. PBTD 5,250'. Perf 5,214'-5,222' w/2 jspf. Swb 20 bbls SW per hr (Cl=187,000 mg/l), trace to no gas. CIBP 5,150 +35 sx cmt. Perf csg w/3 js @1,390', cmt w/150 sx, 100' cmt in csg. 50' cmt @surface. P&A 5/19/2000.

Well P&A Diagram

API: 3002534782 25473
Operator: C.W. Trainer
Lease: Mary Federal Well No: 1
Location: Sec 25, T23S-R33E Lea Co., NM
Footage: 1980 FSL, 1980 FEL

KB: 3654
GL: 3636
Spud date: March 26, 1977
Plugged c: May 26, 2000
MSL of TD: -10546

Surface Csg

Size:	20" 94# H-40
Set @:	703
Sxs cmt:	1048
Circ:	50 sx
TOC:	Surf
Hole Size:	26"

Intermediate Csg

Size:	10-3/4" 40.5-51# J-55
Set @:	5,150
Sxs cmt:	3065
Circ:	Yes
TOC:	Surf
Hole Size:	17-1/2"

Production Csg

Size:	7-5/8" 33.7#
Set @:	12087
Sxs cmt:	1200
Circ:	No
Hole Size:	9-1/2"

7-5/8" DV depth NR

Production Liner

Size:	5-1/2"
Set @:	12000-14096
Sxs cmt:	100
Circ:	NR
Hole Size:	7-5/8"

Production Liner

Size:	3-1/2"
Set @:	11707-14096
Sxs cmt:	100
Circ:	NR
Hole Size:	in 5-1/2" csg

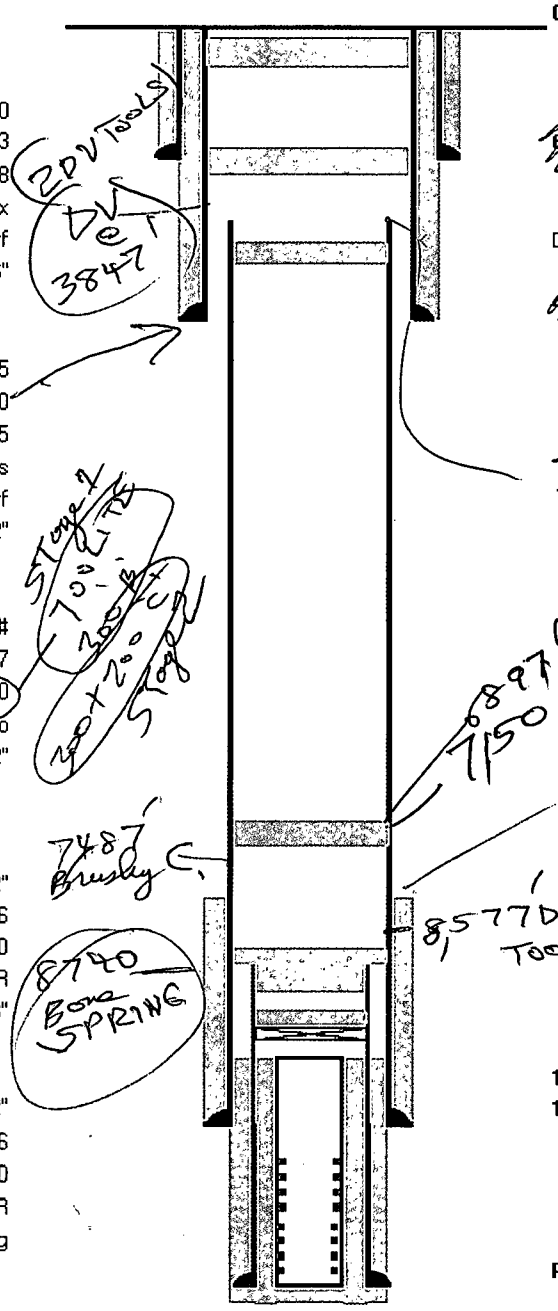

0

20 sx 61'-3'

~~604~~ 328 sx +700 sx 1"
50 sx 754' TOC 561'

DV 3847 7-5/8" cut pulled @ 3773'
40 sx 3933' tagged @ 3823'

~~4380~~

50 sx 7150' tagged @ 6897'

TOC 7-5/8" 8320 TS
10700' Cut and pulled 5-1/2"

25 sx 11421-11673
CIBP 11673 + 25 sx

11707
12087

Perf 12908-13498, 13658'13498

PBTD 14106

Not to Scale **TD 14200**

Present Wellbore:

SEC 25, T-23S, R-33E
1980' FSL & 1980' FEL

"0" - 17.4' AGL

20", csg @ 703' w/748 sx.

T. SALT 1600
B. SALT 5000

10¾", csg @ 5150' w/3065 sx.

COMPLETION INFO:
MORROW NON-COMMERCIAL

2⅞" TBG & BAKER LOK-SET PACKER SET @ 8432'

PERF 4 JSPF @ 8420'; BREAK DOWN WITH 100 GALS ACID; SQUEEZE WITH 125 SX; PERF 2 JSPF FROM 8492' TO 8500', BREAKDOWN WITH 2000 GALS ACID & FRAC WITH 475 BBLS LSE CRUDE, 18,000 LB 20/40 SAND. COMMUNICATED UP BETWEEN 10¾" AND 7⅝" TO SURFACE.

Perf 4 JSPF @ 8420', Squeeze w/125 sx

PERF 8492'-8500' w/2 JSPF

CIBP @ 9000' w/2 sx Cement above

7⅝", 33.7# csg @ 12,087' w/1200 sx.

CEMENT PLUGS:
12000' - 12140' (75 sx)
12400' - 12,500' (50 sx)
12,700' - 12,800' (50 sx)
13,600' - 13,700' (50 sx)

TD 14,200'

Present Wellbore

MAW

CONFIDENTIAL OIL COMPANY
CALCULATION SHEET

JOB NO.

1/12/78

TITLE MID BELL LAKE UNIT No. 1

FIELD

STATE

Proposed Wbore

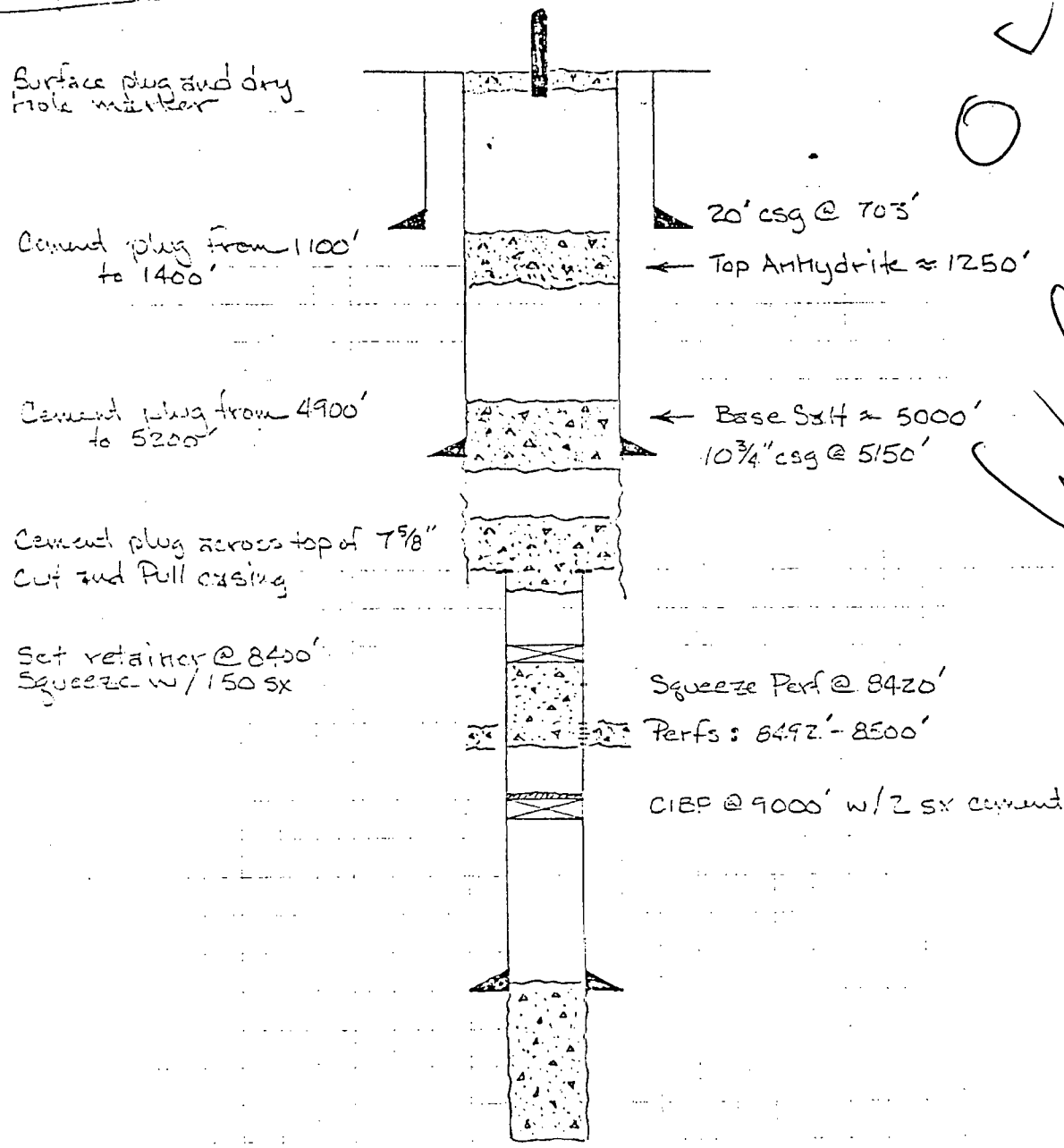

Proposed wellbore

OCD Well File

MAW

1/16/78

CALCULATION SHEET

TITLE MID BELL LAKE UNIT No. 1

JOB NO.

1c to oca

COPY TO O. C. C.

Form 9-331
Dec. 1973

Form Approved.
Budget Bureau No. 42-R1424

UNITED STATES
DEPARTMENT OF THE INTERIOR
GEOLOGICAL SURVEY

SUNDRY NOTICES AND REPORTS ON WELLS

(Do not use this form for proposals to drill or to deepen or plug back to a different reservoir. Use Form 9-331-C for such proposals.)

1. oil well ☐ gas well ☒ other

2. NAME OF OPERATOR: Continental Oil Company

3. ADDRESS OF OPERATOR: Box 460, Hobbs, N.M. 88240

4. LOCATION OF WELL (REPORT LOCATION CLEARLY. See space 17 below.)
AT SURFACE: 1980' FSL + 1980' FEL
AT TOP PROD. INTERVAL:
AT TOTAL DEPTH: Same.

5. LEASE: NM-25465

6. IF INDIAN, ALLOTTEE OR TRIBE NAME

7. UNIT AGREEMENT NAME: Mid Bell Lake Unit

8. FARM OR LEASE NAME: Mid Bell Lake Unit

9. WELL NO.: 1

10. FIELD OR WILDCAT NAME: Undesig. Bell Lake

11. SEC., T., R., M., OR BLK. AND SURVEY OR AREA: Sec. 25 T-23S, R-33E

12. COUNTY OR PARISH: Lea

13. STATE: N.M.

14. API NO.

15. ELEVATIONS (SHOW DF, KDB, AND WD): 3636' GR

16. CHECK APPROPRIATE BOX TO INDICATE NATURE OF NOTICE, REPORT, OR OTHER DATA

REQUEST FOR APPROVAL TO:		SUBSEQUENT REPORT OF:
TEST WATER SHUT-OFF	☐	☐
FRACTURE TREAT	☐	☐
SHOOT OR ACIDIZE	☐	☐
REPAIR WELL	☐	☐
PULL OR ALTER CASING	☐	☐
MULTIPLE COMPLETE	☐	☐
CHANGE ZONES	☐	☐
ABANDON*	☐	☒
(other)		

RECEIVED
SEP 13 1978
U. S. GEOLOGICAL SURVEY
HOBBS, NEW MEXICO

(NOTE: Report results of multiple completion or zone change on Form 9-330.)

17. DESCRIBE PROPOSED OR COMPLETED OPERATIONS (Clearly state all pertinent details, and give pertinent dates, including estimated date of starting any proposed work. If well is directionally drilled, give subsurface locations and measured and true vertical depths for all markers and zones pertinent to this work.)*

Rigged up 2-8-78 to P+A as follows: Pulled 2 7/8" Tbg. Set cmt Retainer at 8401' and Pumped 150 sx of class "H" cmt out of retainer + spotted 9 sx of cmt on top of retainer. Set cmt retainer at 4965' and Pumped 110 sx of class "C" cmt out of retainer + spotted 10' of cmt on top of retainer. Shot 9 5/8" Csg off at 3773' and Pulled 90 Joints of Csg. Spotted 50 sx of Class "H" cmt Plug at 3840'; 125 sx of Class "H" cmt plug at 1400'; 20 sx of Class "C" cmt surface plug. Rel. Rig 2-21-78. Erected Dry hole marker.

Subsurface Safety Valve: Manu. and Type _____ Set @ _____ Ft.

18. I hereby certify that the foregoing is true and correct

SIGNED: Wm. A. Butterfield TITLE: Admin. Supv. DATE: 4-11-78

(This space for Federal or State office use)

APPROVED BY _____ TITLE _____ DATE _____
CONDITIONS OF APPROVAL, IF ANY:

APPROVED
SEP 8 1978
A. A. J.
ACTING DISTRICT ENGINEER

*See Instructions on Reverse Side

USGS (5), Belco, File.

Well File

Loss in Pressure. Drld CMT From 8288' To 8410'. Circ. Hole To 8600'. Tested 7 7/8" Csg To 1500 PSI, Held OK; Circ. Hole Clean. Perf. 7 7/8" Csg From 8492'-8500' w/2JSPF. Ran 268 JTS of 2 7/8" Tbg with Baker on-off Tool Set AT 8400' and Pkr AT 8401'. Acidized with 1000 Gals 15% Acid with Additives. Swbd 19 Bbls Fluid w/35% oil. Rel Rig 11:00 AM 9-23-77. Shut-in Pending Evaluation.

Well File

Instructions

General: This form is designed for submitting proposals to perform certain well operations, and reports of such operations when completed, as indicated, on Federal and Indian lands pursuant to applicable Federal law and regulations, and, if approved or accepted by any State, on all lands in such State, pursuant to applicable State law and regulations. Any necessary special instructions concerning the use of this form and the number of copies to be submitted, particularly with regard to local, area, or regional procedures and practices, either are shown below or will be issued by, or may be obtained from, the local Federal and/or State office.

Item 4: If there are no applicable State requirements, locations on Federal or Indian land should be described in accordance with Federal requirements. Consult local State or Federal office for specific instructions.

Item 17: Proposals to abandon a well and subsequent reports of abandonment should include such special information as is required by local Federal and/or State offices. In addition, such proposals and reports should include reasons for the abandonment; data on any former or present productive zones, or other zones with present significant fluid contents not sealed off by cement or otherwise; depths (top and bottom) and method of placement of cement plugs; mud or other material placed below, between and above plugs; amount, size, method of parting of any casing, liner or tubing pulled and the depth to top of any left in the hole; method of closing top of well; and date well site conditioned for final inspection looking to approval of the abandonment.

U.S. GOVERNMENT PRINTING OFFICE: 1974—O-533-007

RECEIVED
OCT 1977
OIL CONSERVATION COMM.
HOBBS, N. M.

UNITED STATES
DEPARTMENT OF THE INTERIOR
GEOLOGICAL SURVEY

SUNDRY NOTICES AND REPORTS ON WELLS

1. TYPE OF WELL: Gas X Oil ☐
2. NAME OF OPERATOR
3. ADDRESS OF OPERATOR
4. LOCATION OF WELL (REPORT LOCATION CLEARLY. See space 17 below.)
AT SURFACE:
AT TOP PROD. INTERVAL:
AT TOTAL DEPTH:
16. CHECK APPROPRIATE BOX TO INDICATE NATURE OF NOTICE, REPORT, OR OTHER DATA
8. FARM OR LEASE NAME
9. WELL NO.
10. FIELD OR WILDCAT
11. SEC., T., R., M., OR BLK. AND SURVEY OR AREA
12. COUNTY OR PARISH
13. STATE
14. API NO.
15. ELEVATIONS

Form 9-331
Dec. 1973

Form Approved.
Budget Bureau No. 42-R1424

UNITED STATES
DEPARTMENT OF THE INTERIOR
GEOLOGICAL SURVEY

SUNDRY NOTICES AND REPORTS ON WELLS

(Do not use this form for proposals to drill or to deepen or plug back to a different reservoir. Use Form 9-331-C for such proposals.)

1. oil well ☐ gas well ☒ other

2. NAME OF OPERATOR: Continental Oil Company

3. ADDRESS OF OPERATOR: Box 460, Hobbs, N.M. 88240.

4. LOCATION OF WELL (REPORT LOCATION CLEARLY. See space 17 below.)
AT SURFACE: 1980' FSL + 1980' FEL
AT TOP PROD. INTERVAL:
AT TOTAL DEPTH: Same

5. LEASE: NM-25465

6. IF INDIAN, ALLOTTEE OR TRIBE NAME

7. UNIT AGREEMENT NAME: Mid Bell Lake Unit

8. FARM OR LEASE NAME: Mid Bell Lake Unit

9. WELL NO.: 1

10. FIELD OR WILDCAT NAME: Undesig. Bell Lake.

11. SEC., T., R., M., OR BLK. AND SURVEY OR AREA: Sec. 25, T-23S, R-33E

12. COUNTY OR PARISH: Lea

13. STATE: N.M.

14. API NO.

15. ELEVATIONS (SHOW DF, KDB, AND WD): 3636 GR.

16. CHECK APPROPRIATE BOX TO INDICATE NATURE OF NOTICE, REPORT, OR OTHER DATA

REQUEST FOR APPROVAL TO:		SUBSEQUENT REPORT OF:
TEST WATER SHUT-OFF	☐	☐
FRACTURE TREAT	☐	☐
SHOOT OR ACIDIZE	☐	☐
REPAIR WELL	☐	☐
PULL OR ALTER CASING	☐	☐
MULTIPLE COMPLETE	☐	☐
CHANGE ZONES	☐	☐
ABANDON*	☒	☐
(other)		

RECEIVED
JAN 26 1978
U. S. GEOLOGICAL SURVEY
HOBBS, NEW MEXICO

(NOTE: Report results of multiple completion or zone change on Form 9-330.)

17. DESCRIBE PROPOSED OR COMPLETED OPERATIONS (Clearly state all pertinent details, and give pertinent dates, including estimated date of starting any proposed work. If well is directionally drilled, give subsurface locations and measured and true vertical depths for all markers and zones pertinent to this work.)*

IT IS Proposed TO Plug and Abandon The Subject well AS Follows: The well was drilled TO T.D. of 14,200' and Plugged back TO 12000' by Belco Pet. corp. AS The Federal BL-25 No. 1. Conoco Took over operations 6-29-77 and Renamed AS Mid Bell Lake unit No. 1. Set CIBP AT 9000' with 2 sx CMT on TOP. Perf 7 5/8" CSG AT 8420' w/4 JSPF; Morrow non-commercial; Squeezed w/125 sx class H CMT. Tested CMT TO 1500 PSI, Held OK. Drld CMT From 8289' TO 8410' and Circ. Hole TO 8600'. Tested 7 5/8" CSG TO 1500 PSI, Held OK. Perf. Brushy Canyon From 8492' TO 8500' w/2 JSPF. Acidized w/3000 Gals of 15% Acid Fraced with 2000 Gals Gelled oil and 4000# 10-20 Sand; 475 Bbls of Lease Crude and 18000# 20-40 Sand. Tested non-commercial. See Attached Proposed Plugging Procedure and well diagram.

~~Subsurface Safety Valve: Manufacturer and Type~~ _____ Set @ _____ Ft.

18. I hereby certify that the foregoing is true and correct

SIGNED Wm. A. Battenfield TITLE ADMIN. SUPV. DATE 1-25-78

(This space for Federal or State office use)

APPROVED BY _____ TITLE _____ DATE _____
CONDITIONS OF APPROVAL, IF ANY:

APPROVED AS AMENDED
JAN 27 1978
A.A.F.
ACTING DISTRICT ENGINEER

*See Instructions on Reverse Side

USGS(6), Belco, File

Well File

Well P&A Diagram

PLUG AND ABANDON WELL DIAGRAM

API:	3002534762			
Operator:	C.W. Trainer			
Lease:	Mary Federal	Well No: 2	**KB:**	3650
Location:	Sec 25, T23S-R33E Lea Co., NM		**GL:**	3632
Footage:	2130 FSL, 660 FEL		**Spud date:**	November 8, 1999
			Plugged c:	April 14, 2003
			MSL of TD:	-5350

Surface Csg

Size:	10-3/4" 40.5#
Set @:	704
Sxs cmt:	280
Circ:	Yes
TOC:	Surf
Hole Size:	13-1/2"

Intermediate Csg

Size:	7-5/8" 29.7#
Set @:	5,155
Sxs cmt:	511
Circ:	Yes
TOC:	Surf
Hole Size:	8-3/4"

Production Csg

Size:	4-1/2" 11.6#
Set @:	9000
Sxs cmt:	510
Circ:	NO
Hole Size:	6-1/2"

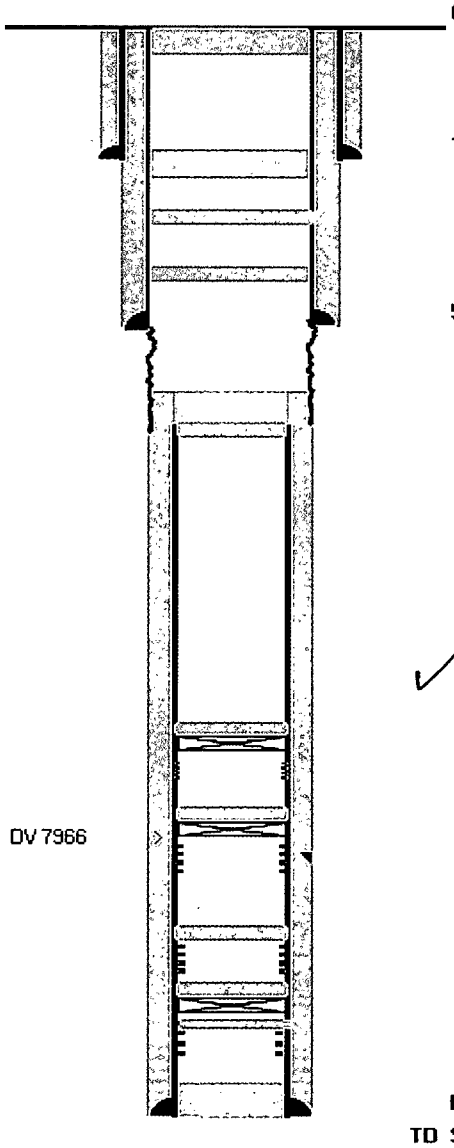

0 — Surface plug vol NR

704 — 25 sx 632'-734'

25 sx 1378'-1500'

40 sx 2004'-2200

5155

TOC 4-1/2" 5130' CBL
Cut/pulled 4-1/2" @5240'
85 sx cmt 5290' tagged 4985'

CIBP 7270' +25 sx cmt to 6892'
Perf 7320'-7355' 20 shots.

CIBP 7770' +25 sx cmt to 7392'
Perf 7982'-8019' 20 shots.

Perf 8339'-8452' 20 shots. RBP 8250'
CIBP 8610' +25' cmt
Perf 8724'-8873' 40 shots

PB 8965
TD 9000

Not to Scale

Well P&A Diagram

PLUG AND ABANDON WELL DIAGRAM

API:	3002527479		
Operator:	C.W. Trainer		
Lease:	Mary Federal	Well No. 3	
Location:	Sec 25, T23S-R33E Lea Co., NM		
Footage:	1650 FSL, 660 FEL		

KB:	3650
GL:	3632
Spud date:	July 7, 1981
Plugged d :	May 19, 2000
MSL of TD:	-5318

Surface Csg

Size:	8-5/8" 24# K-55
Set @:	1300
Sxs cmt:	650 sx + 1" w/400 sx
Circ:	Yes
TOC:	Surf
Hole Size:	13-1/2"

Intermediate Csg

Size:	4-1/2" 10.5# K-55
Set @:	5412
Sxs cmt:	300
Circ:	No
Hole Size:	6-1/2"

Production Csg

Size:	2-7/8" 6.5#
Set @:	8968
Sxs cmt:	350
Circ:	No
Hole Size:	3-7/8"

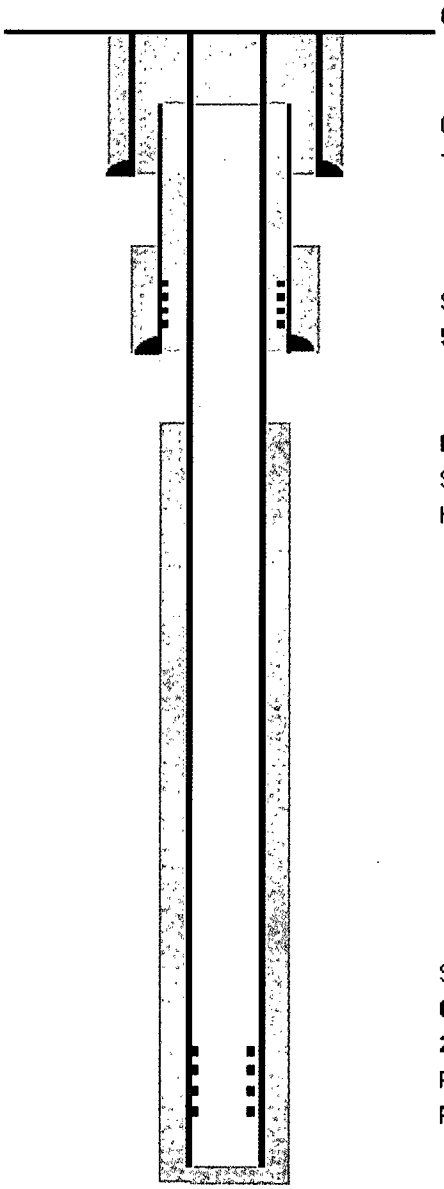

0

Cut/pulled 375' 4-1/2"

1330

Sqzd down 4-1/2" w/400 sx

5412

DATA ON P&A INCOMPLETE

Some 2-7/8" probably recovered

Hole essentially J&A

Sqzd 2-7/8" w/350 sx at TD

Calc sufficient to cmt

2-7/8" into 4-1/2"

Perf 8740-61'

Perf 8732-8800', Balls stuck in tbg

TD 8968

Not to Scale

Delaware Water Co., LLC
1980' FNL & 660' FEL
Sec. 25, T23S-R33E
Lea County, NM

API 30-025-37582

Legal Notice Publication

Affidavit of Publication

STATE OF NEW MEXICO)
) ss.
COUNTY OF LEA)

Joyce Clemens being first duly sworn on oath deposes and says that she is Advertisting Director of THE LOVINGTON LEADER, a thrice a week newspaper of general paid circulation published in the English language at Lovington, Lea County, New Mexico; that said newspaper has been so published in such county continuously and uninterruptedly for a period in excess of Twenty-six (26) consecutive weeks next prior to the first publication of the notice hereto attached as hereinafter shown; and that said newspaper is in all things duly qualified to publish legal notices within the meaning of Chapter 167 of the 1937 Session Laws of the State of New Mexico.

That the notice which is hereto attached, entitled Legal Notice was published in a regular and entire issue of THE LOVINGTON LEADER and not in any supplement thereof, for one (1) day(s), beginning with the issue of June 23, 2012 and ending with the issue of June 23, 2012.

And that the cost of publishing said notice is the sum of $ 37.03 which sum has been (Paid) as Court Costs.

Joyce Clemens

Joyce Clemens, Advertising Manager
Subscribed and sworn to before me this 25th day of June, 2012.

Gina Fort

Gina Fort
Notary Public, Lea County, New Mexico
My Commission Expires June 30, 2014

OFFICIAL SEAL
GINA FORT
Notary Public
State of New Mexico
My Comm. Expires 6/30/14

Legal Notice

Delaware Water Company, LLC, c/o Kay Havenor, 904 Moore Ave, Roswell, NM 88201, (575) 626-4518, email: KHavenor@geore-sources.com, is seeking approval from the New Mexico Oil Conservation Division to re-enter and re-complete the Chesapeake Operating, Inc Brininstool 25 Federal #1, located 1980 feet from the north line and 660 feet from the east line of Section 25, T23S, R33E, Lea County, NM, approximately 19 miles west of Jal, NM and adjacent to Lea Co. CR-2 (Delaware Basin Rd), for commercial produced water disposal as the Delaware Water Company Brininstool Federal #1. The proposed disposal interval is the Bell Canyon/Cherry Canyon Formations through 5-1/2" casing perforations from approximately 5,223 feet to 7,380 feet. Delaware Water Company plans to dispose of a maximum of 5,000 BWPD at a maximum pressure of 1,044 psi, or as allowed by depth. Parties with questions regarding this proposal are urged to contact Kay Havenor at the address or phone number above. Interested parties must file objections or requests for hearing within 15 days to the New Mexico Oil Conservation Division, 1220 S. St. Francis Dr., Santa Fe, NM 87505.

Published in the Lovington Leader June 23, 2012.

Item XIII:

Minerals Owner:

Bureau of Land Management
c/o Carlsbad Field Office
620 E. Greene Street
Carlsbad, NM 88220

Surface Owner:

Brininstool XL Ranch, LLC
P.O. Box 940
Jal, NM 88252

Operators:

Chesapeake Operating, Inc.
P.O Box 18496
Oklahoma City, OK 73154

All acreage Sec.24& 25, Sec. 30, T25S-R34E
SW/4 Sec. 19, T23S-R34E (Devon deep operator)

Devon Energy Production Company, LP
20 N. Broadway
Oklahoma City, OK 73102

SW/4 Sec. 19, T23S-R34E {deep operator)

XTO Energy, Inc.
200 N. Loraine, Ste 800
Midland, TX 79701

SW/4 Sec. 19, T23S-R34E (Shallow operator)

Delaware Water Co., LLC
1980' FNL & 660' FEL
Sec. 25, T23S-R33E
Lea County, NM

API 30-025-37582

Enlarged View of AOR
Centered in Unit H Sec. 22, T25S-R32E Lea Co., NM

Item V(a):

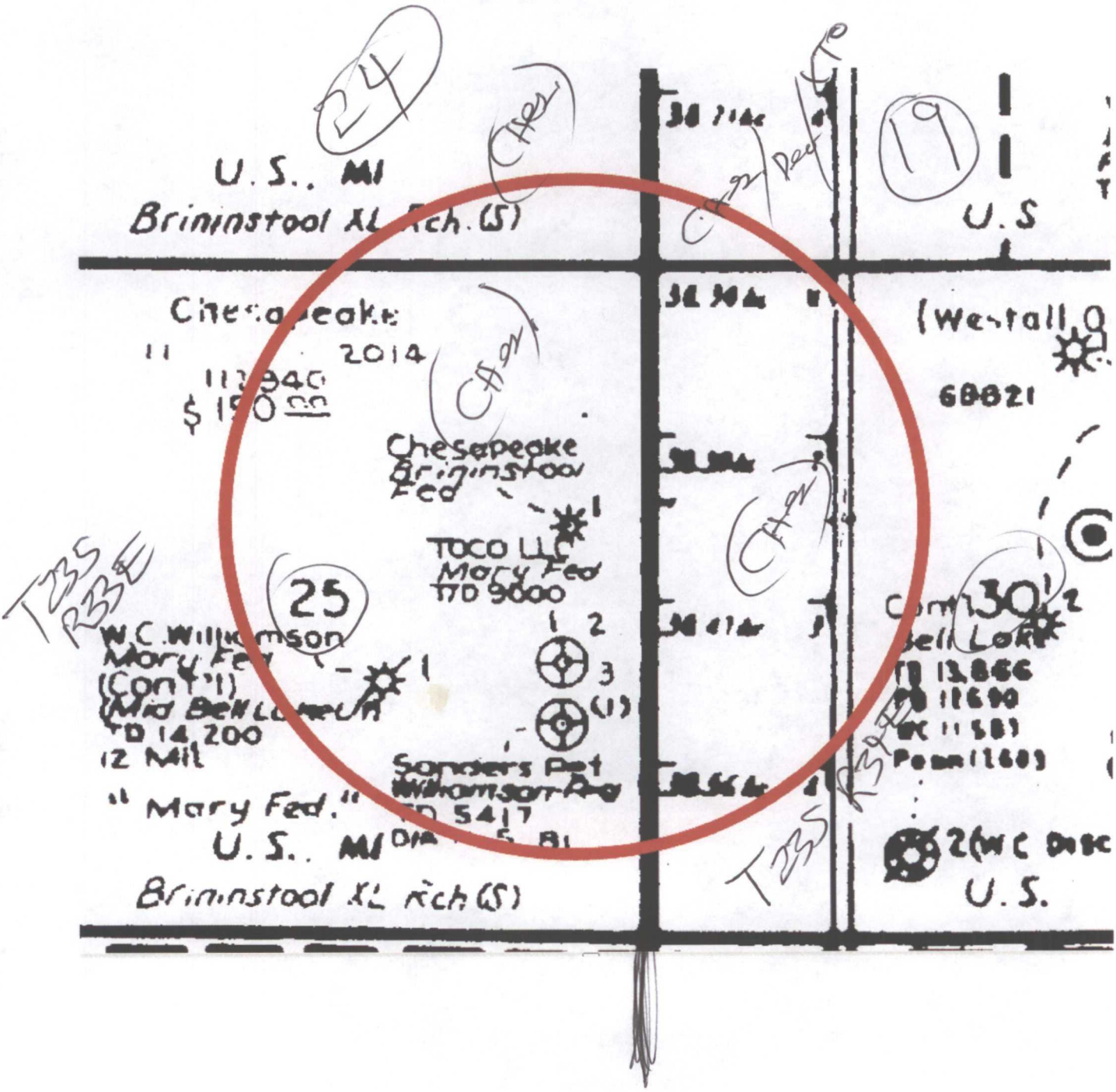

Certified Mail Receipts

7011 1570 0003 3481 5833

U.S. Postal Service
CERTIFIED MAIL RECEIPT
(Domestic Mail Only; No Insurance Coverage Provided)
For delivery information visit our website at www.usps.com
JAL NM 88252 OFFICIAL USE

Postage	$ $1.50	0602
Certified Fee	$2.95	04
Return Receipt Fee (Endorsement Required)	$2.35	Postmark Here
Restricted Delivery Fee (Endorsement Required)	$0.00	
Total Postage & Fees	$ $6.80	06/23/2012

Sent To Brininstool XL Ranch, LLC
Street, Apt. No.; or PO Box No. P.O. Box 940
City, State, ZIP+4 Jal, NM 88252
PS Form 3800, August 2006 See Reverse for Instructions

7011 1570 0003 3481 5826

U.S. Postal Service
CERTIFIED MAIL RECEIPT
(Domestic Mail Only; No Insurance Coverage Provided)
For delivery information visit our website at www.usps.com
OKLAHOMA CITY OK 73154 OFFICIAL USE

Postage	$ $1.70	0602
Certified Fee	$2.95	04
Return Receipt Fee (Endorsement Required)	$2.35	Postmark Here
Restricted Delivery Fee (Endorsement Required)	$0.00	
Total Postage & Fees	$ $7.00	06/23/2012

Sent To Chesapeake Operating, Inc.
Street, Apt. No.; or PO Box No. P.O. Box 18496
City, State, ZIP+4 Oklahoma City, OK 73154
PS Form 3800, August 2006 See Reverse for Instructions

7011 1570 0003 3481 5840

U.S. Postal Service
CERTIFIED MAIL RECEIPT
(Domestic Mail Only; No Insurance Coverage Provided)
For delivery information visit our website at www.usps.com
OKLAHOMA CITY OK 73102 OFFICIAL USE

Postage	$ $1.70	0602
Certified Fee	$2.95	04
Return Receipt Fee (Endorsement Required)	$2.35	Postmark Here
Restricted Delivery Fee (Endorsement Required)	$0.00	
Total Postage & Fees	$ $7.00	06/23/2012

Sent To Devon Energy Production Company, LP
Street, Apt. No.; or PO Box No. 20 N. Broadway
City, State, ZIP+4 Oklahoma City, OK 73102
PS Form 3800, August 2006 See Reverse for Instructions

7011 1570 0003 3481 5918

U.S. Postal Service
CERTIFIED MAIL RECEIPT
(Domestic Mail Only; No Insurance Coverage Provided)
For delivery information visit our website at www.usps.com
MIDLAND TX 79701 OFFICIAL USE

Postage	$ $1.70	0602
Certified Fee	$2.95	04
Return Receipt Fee (Endorsement Required)	$2.35	Postmark Here
Restricted Delivery Fee (Endorsement Required)	$0.00	
Total Postage & Fees	$ $7.00	06/23/2012

Sent To XTO Energy, Inc.
Street, Apt. No.; or PO Box No. 200 N. Loraine. Ste. 800
City, State, ZIP+4 Midland, TX 79701
PS Form 3800, August 2006 See Reverse for Instructions

7011 1570 0003 3481 5802

U.S. Postal Service
CERTIFIED MAIL RECEIPT
(Domestic Mail Only; No Insurance Coverage Provided)
For delivery information visit our website at www.usps.com
CARLSBAD NM 88220 OFFICIAL USE

Postage	$ $1.50	0602
Certified Fee	$2.95	04
Return Receipt Fee (Endorsement Required)	$2.35	Postmark Here
Restricted Delivery Fee (Endorsement Required)	$0.00	
Total Postage & Fees	$ $6.80	06/23/2012

Sent To Bureau of Land Management
Street, Apt. No.; or PO Box No. 620 E. Greene St.
City, State, ZIP+4 Carlsbad, NM 87220
PS Form 3800, August 2006 See Reverse for Instructions

Miss	Row	C-108	C-108 disposal application submittals... CHECKLIST to ensure all items are supplied or considered.
	1		***Operator, Well, and Contact info:***
	2	II	Name of person submitting the application: Kay Havenor Other Contact?
	3	II	Did you Include a contact Email in the application? Yes and Mailing Address? Yes and Phone? Yes
	4	II	Operator Name: Delaware Water Company, LLC OGRID Num: 290484
	5		RULE 5.9 Compliance..... Number of Inactive Wells 0 vs Total Wells Operated 0 .... Is financial assurance required on any well? 0 wells in Violation
	6		Is there any hearing order finding this operator out of compliance with Division Rule 19.15.5.9 NMAC? No
	7		Are all Rule 5.9 issues OK to allow the Division to issue Disposal Permits?
	8	III	Well Name: Brininstool 25 Federal
	9	III	API Num: 30-025-37582 Spud Date: 1/12/2006
	10		Have you included API numbers on all wellbore diagrams and well list(s) in this application? Yes
	11	III	Proposed well...Footages 1980' FNL & 660' FEL Unit H Sec 25 Tsp 23S Rge 33E County Lea
	12		General Location (i.e. Y miles NW of Z): From Jct NM-128 and Lea Co. CR-2 (Delaware Basin Rd) north 1.6 miles and west 0.5 miles
	13		Current Well Status: P&A
	14	I	General Summary of Planned Work to Well: Re-enter, CO to DV cmt plug @ 7836", set cmt to 7530'. Perf OA 5223'-7380'. Acidize. Run tbg and complete.
	15		***INTERVAL TOP and BOTTOM:***
	16	IIIB.(2)	Proposed disposal Top Depth: 5,223' Formation Name: Delaware Bell Canyon (include Member Names for Delaware or Mesaverde)
	17	IIIB.(2)	Proposed disposal Bottom Depth: 7,380' Formation Name: Delaware Cherry Canyon
	18	IIIB.(2)	Is the disposal interval OpenHole? or Perfed? Yes
	19	IIIB.(2)	What will be the disposal tubing size OD? 2-7/8" or 2-3/8" Packer Seat, Feet: approx 5,173'

Miss	Row	C-108	C-108 disposal application submittals... CHECKLIST to ensure all items are supplied or considered.
	20	VII	What max surf inj. psi are you proposing? __1044_____ If differing from 0.2 psi/ft surf. Grad., is supporting data attached such as a Step Rate Test?_____
	21		***FRESH WATERS:***
	22	VIII	Depth to bottom of Fresh Waters:___estimated less than _150' _____Formation Name(s)?____Ogallala_____
	23	XI	Any Fresh Water Wells Within 1 Mile? __No_____ If so, did you attach an analysis from these Wells? _____
	24		Are all "Fresh" waters isolated with Casing and Cement? __Yes_____ ("Fresh" water is defined as less than 10,000 mg/l of TDS)
	25	XII	Included "Affirmative Statement" concerning any Connection from Disposal Depths to existing Fresh Waters?___Yes Item XII_____
	26		***WASTE WATERS:***
	27	XIV	Will this be a Lease Only disposal well? _____ or only used for the Operator's own waste needs? _____or Commercial Disposal? __Yes_____
	28	VII	Which formations will supply the waste waters to be disposed into this well... List most common...? Brushy Canyon, Bone Springs
	29	VII	Are Waste waters compatible with proposed disposal interval waters?__Yes_____ Did you include waste water analysis? ____NA_____
	30		***AT PROPOSED WELL....INSITU WATERS AND HYDROCARBON POTENTIAL:***
	31		Is a discussion included of the potential for future OIL/GAS recovery from the proposed disposal interval?____Yes_____
	32		If your proposed well for disposal is a depleted producer (within the proposed interval); do you know what was the cumulative oil/gas/water?_____and did you include a Rate-Time plot of this depleted interval?_____
	33	VII	Insitu water analysis Included? Yes but from outside the AOR_____ Is the salinity within the disposal interval more than 10,000 mg/l of TDS? __Yes_____ or how will you determine this insitu water salinity?_
	34	VIII	Does the application include a list of Formation tops down to and including the bottom of the target formation? ____Yes, on page 12._____
	35		What is the top _main salt 3520'_____and bottom __5080'_____ of the Salado Salt (....If this well is in the Southeast and the Salt is present)
	36	X	Are all existing Logs (including any CBL over the disposal interval) are on the OCD Web Site? __Yes__If logs not there, please send_____
	37	IIIA.	Are the wellbore diagrams for this well included in the Application.....Before Conversion?_Yes___ and After Conversion?__Yes__

Miss	Row	C-108	C-108 disposal application submittals... CHECKLIST to ensure all items are supplied or considered.
	38		Are the top and bottom footage of the proposed disposal interval marked on the "after" diagram? __Yes___
	39		***NOTICE:***
	40	XIV	Date of the Newspaper Notice in the County:____6/23/2012_____
	41	V	Within 1/2 mile, did you clearly identify (either on a map or by legal description) all separately owned tracts of lands within the disposal interval?___Yes_____
	42	XIII	Did you identify the owner(s) of each of these separately owned tracts? Yes _____Were they all formally noticed?__Yes___
	43	XIII	If reentering a P&Aed well, are there depth divisions of ownership within that well? No ____.....If so, have you also noticed all the shallower interests of the intent to use the well for disposal? Yes
	44	XIII	Is the proposed well within the R-111-P defined Potash Area or the BLM Secretaries Potash Area?__No _..... If so, did you send notice to the nearest Potash lessee?
	45	XIV	Who owns the surface lands at the disposal well site (BLM, SLO, or who)? Brininstool XL Ranch _____Was that party formally noticed? Yes,
	46		***Area of Review:***
	47	V	Did you include a map identifying all wells within 2 miles?___Yes_____
	48	VI	Did you include a list of all AOR wells?____Yes_____Is the list available to be emailed (if requested) in spreadsheet format?__Yes - Included in Item VI list____
	49	VI	Does this list identify all wells penetrating (at least the top of) the disposal interval within 1/2 mile of the proposed well?___Yes_____
	50	VI	Did you include wellbore diagrams for all P&Aed wells that exist within the 1/2 mile AOR that penetrate the disposal interval? Yes
	51	VI	How many wells exist within the 1/2 mile AOR that penetrate the disposal interval? 4 wells How many of these are Plugged/Dry and Abandoned? 4 P&A
	52	VI	Are details included on cement coverage of the proposed disposal interval for all wells penetrating the disposal interval within 1/2 mile of the roposedwell? Yes_____
	53	VI	Do all reported cement tops describe how that "top" was determined? If Available If you calculated any tops, what fillup efficiency factor did you use? 1.0
	54	VI	Did you identify the presence and depth of all Cement Stage Tools (DV) in the subject well and in the AOR wells?___Yes, when info was available_____
	55	VIII	For the target formation, is there significant formation structural depth changes within the 1/2 mile AOR? No _____

Miss	Row	C-108	C-108 disposal application submittals... CHECKLIST to ensure all items are supplied or considered.
	56	VIII	Is there any Karst or Massive Limestone in this target formation? No ...or in the formations directly above or below? No
	57		***Administrative or Hearing:***
	58	VI	How many wells within the 1/2 mile AOR currently are producing (or still have open perforations) within the disposal interval? is it "gas" or "oil"?
	59		.... NOTE: If the proposed disposal interval is a "Gas" interval or if any AOR wells are producing or have open perforations within this interval then this application may not be properly classified as a "disposal". These types of applications must be processed at an examiner hearing.
	60		Any other Issues..?

Jones, William V., EMNRD

From: Jones, William V., EMNRD
Sent: Thursday, August 16, 2012 11:43 AM
To: khavenor@georesources.com
Cc: Ezeanyim, Richard, EMNRD; Kautz, Paul, EMNRD; Phillips, Dorothy, EMNRD
Subject: Disposal application from Delaware Water Company, LLC: Brininstool 25 Federal #1 30-025-37582 Bell and Cherry perfs from 5223 to 7380 feet

Hello Dr. Havenor,
Just reviewed your application and had a few comments and requests,

(1) For the notices – Would you please also send notice to Endurance and Kaiser Francis as relatively nearby Delaware producers.
(2) Please let us know at which depth interval (and member name) is the nearest Delaware production laterally away from this well site.
(3) Do you plan to squeeze the 4-1/2 – 7 inch annulus over the top of your disposal interval or leave it open? Would you send a summary of the planned re-entry procedure that has this info on it?
(4) There is one well in the AOR that may not have isolation of your proposed disposal depth range – the file is a bit unclear but it seems the 30-025-25473 well has open 9-1/2 inch hole to 7-5/8 inch casing annulus across the entire Delaware section. The well may be relatively easy to re-enter and squeeze to isolate your interval. Alternatively, depending on the answer to (2) above, you could re-advertise this disposal well for the entire unbounded interval. Let me know what Delaware Water Company will agree to do.
(5) I don't see this operator as being listed in my available places to look to verify the Rule 5.9 issues. Which probably means this entity does not yet operate wells. Please send me some proof that Delaware Water Company, LLC has a bond in place to operate in NM. Dorothy Phillips of this office has all this sort of data – please get something from her I can put in the file.

They want to go this route
work w/ BLM

Thanks in advance for the information,

William V. Jones, P.E.
505-476-3448W 505-476-3462F
Engineering Bureau, Oil Conservation Division
1220 South St. Francis Dr.
Santa Fe, NM 87505

Devon Protested when?
Devon withdrew Protest 9/19/12

Jones, William V., EMNRD

From: Jones, William V., EMNRD
Sent: Thursday, August 16, 2012 12:29 PM
To: Phillips, Dorothy, EMNRD
Cc: khavenor@georesources.com
Subject: RE: Disposal application from Delaware Water Company, LLC: Brininstool 25 Federal #1 30-025-37582 Bell and Cherry perfs from 5223 to 7380 feet

OK – Thanks Dorothy.
Kay – all is well for item (5)

From: Phillips, Dorothy, EMNRD
Sent: Thursday, August 16, 2012 12:25 PM
To: Jones, William V., EMNRD
Subject: RE: Disposal application from Delaware Water Company, LLC: Brininstool 25 Federal #1 30-025-37582 Bell and Cherry perfs from 5223 to 7380 feet

They have OGRID 290484 as the completed the online registration with Daniel and Sonny. They have **no bonding with the OCD** as they were going to operate a federal well. Federal wells bonded with the BLM.

From: Jones, William V., EMNRD
Sent: Thursday, August 16, 2012 11:43 AM
To: khavenor@georesources.com
Cc: Ezeanyim, Richard, EMNRD; Kautz, Paul, EMNRD; Phillips, Dorothy, EMNRD
Subject: Disposal application from Delaware Water Company, LLC: Brininstool 25 Federal #1 30-025-37582 Bell and Cherry perfs from 5223 to 7380 feet

Hello Dr. Havenor,
Just reviewed your application and had a few comments and requests,

(1) For the notices – Would you please also send notice to Endurance and Kaiser Francis as relatively nearby Delaware producers.
(2) Please let us know at which depth interval (and member name) is the nearest Delaware production laterally away from this well site.
(3) Do you plan to squeeze the 4-1/2 – 7 inch annulus over the top of your disposal interval or leave it open? Would you send a summary of the planned re-entry procedure that has this info on it?
(4) There is one well in the AOR that may not have isolation of your proposed disposal depth range – the file is a bit unclear but it seems the 30-025-25473 well has open 9-1/2 inch hole to 7-5/8 inch casing annulus across the entire Delaware section. The well may be relatively easy to re-enter and squeeze to isolate your interval. Alternatively, depending on the answer to (2) above, you could re-advertise this disposal well for the entire unbounded interval. Let me know what Delaware Water Company will agree to do.
(5) I don't see this operator as being listed in my available places to look to verify the Rule 5.9 issues. Which probably means this entity does not yet operate wells. Please send me some proof that Delaware Water Company, LLC has a bond in place to operate in NM. Dorothy Phillips of this office has all this sort of data – please get something from her I can put in the file.

Thanks in advance for the information,

Jones, William V., EMNRD

From: Kay Havenor <khavenor@georesources.com>
Sent: Friday, August 24, 2012 2:39 PM
To: Jones, William V., EMNRD
Subject: Brininstool SWD/Delaware Water Co.
Attachments: Response OCD on 5 problems in wells.pdf; Re-entry program Brininstool Fed SWD-1.pdf

Mr. Jones,

Attached please find a partial response to your comments/questions on 30-025-37582 Brininstool 25 Federal #1 C-108.

Kay

Kay C. Havenor, Ph.D., PG. CPG
GeoScience Technologies
904 Moore Ave
Roswell, NM 88201-1144
(575) 626-4518

Geoscience Technologies

Kay C. Havenor, Ph.D

Office: 575-626-4518
e-mail: KHavenor@GeoResources.com
904 Moore Ave
Roswell, New Mexico 88201-1144

August 24, 2012

C-108 Delaware Water Company, LLC
Brininstool 25 Federal #1 3002537582
OCD Info requests Aug. 16, 2012

Mr. Jones:

Thank you for your observations and questions on the subject C-108. Hopefully the following will satisfactorily address the issues observed.

(1) Notices to Endurance and Kaiser Francis were provided and copies of Certified Mail transmittal were sent to you earlier.

(2) Proximity of Delaware production to Brininstool well: The closest "Delaware" production is located 1.45 miles southeast in Sec. 31, T23S-R34E. Although the Delaware field name alludes to the Cherry Canyon, the actual (poor) production is from the basal sandstone of the Brushy Canyon Formation and is co-mingle with upper Bone Spring Formation oil. This interval is about 1,300' beneath the lowest proposed perf in the Brininstool 25 Federal #1.

(3) 4-1/2" to 7" annulus opening above disposal interval - leave or squeeze? Will be squeezed. Re-entry plan attached as PDF.

(4) Working on this.

(5) Resolved.

Thank you for your assistance.

Kay Havenor

Re-entry program
Brininstool 25 Federal #1

Expect all operations may be field checked by BLM.

Prep location, clean-out and prepare cellar
Wellhead 13-⅜ x 9-⅝" x 4-½"
Setup closed-loop type system for re-entry - fresh water mud OK
BLM probably will require 5M BOPE
Test BOPE - full test -certified
DO surface plug and tag plug @779'
DO 779' plug and tag plug @1160'
DO 1160' plug and tab plug @1975'
    Plug reported to be 195' thick
DO CO to plug about 5000'
    Test 4-½" csg to 1500# - monitor annulus 13-⅜"
Perf 2 shots @ 5100'. Sqz 4-1/2" to 7" w/500 sx Class "C" neat. WOC
DO 5000' plug and sqz cmt
CO and tag plug @7836'
    Test 4-½" csg to 1500#
    Expect BLM may require DO of this plug, CBL, and reset plug (plus next plug)
Set 10 sx Class H cmt plug on 7836' plug
    WOC until it can be drilled.
    Clean-off or add cmt to good tag @ 7530'
Circ hole VERY clean
Run final pressure test as insurance

Run tie-in perf log and perforate
Acidize
Flange-up for running and set packer
Clean location
Run MIT

Jones, William V., EMNRD

From: Kay Havenor <khavenor@georesources.com>
Sent: Tuesday, August 28, 2012 11:30 AM
To: Jones, William V., EMNRD
Subject: Brininstool/Delaware Water

Will,

Thanks for the snail-mail. Attached are the Cert Mail receipts and verification of delivery.

Kay

DID NOT RECEIVE, BECAUSE OF EMAIL PROBLEMS...

Kay C. Havenor, Ph.D., PG. CPG
GeoScience Technologies
904 Moore Ave
Roswell, NM 88201-1144
(575) 626-4518

SENDER: *COMPLETE THIS SECTION*

- Complete items 1, 2, and 3. Also complete item 4 if Restricted Delivery is desired.
- Print your name and address on the reverse so that we can return the card to you.
- Attach this card to the back of the mailpiece, or on the front if space permits.

1. Article Addressed to:

Endurance Resources, LLC
15455 Dallas, Parkway, Ste. 600
Addison, TX 75234

Brinnstool

COMPLETE THIS SECTION ON DELIVERY

A. Signature
X Kyle Clark ☐ Agent ☐ Addressee

B. Received by (Printed Name): Kyle Clark
C. Date of Delivery: 8-9

D. Is delivery address different from item 1? ☐ Yes
If YES, enter delivery address below: ☐ No

3. Service Type
☒ Certified Mail ☐ Express Mail
☐ Registered ☐ Return Receipt for Merchandise
☐ Insured Mail ☐ C.O.D.

4. Restricted Delivery? (Extra Fee) ☐ Yes

2. Article Number (Transfer from service label): 7011 1570 0003 3481 6038

PS Form 3811, February 2004 Domestic Return Receipt 102595-02-M-1540

U.S. Postal Service™
CERTIFIED MAIL™ RECEIPT
(Domestic Mail Only; No Insurance Coverage Provided)
For delivery information visit our website at www.usps.com®
DALLAS TX 75234 OFFICIAL USE

Postage	$ $1.70
Certified Fee	$2.95
Return Receipt Fee (Endorsement Required)	$2.35
Restricted Delivery Fee (Endorsement Required)	$0.00
Total Postage & Fees	$ $7.00

0602 03
Postmark Here
AUG 17 2012
08/17/2012

Sent To: Endurance Resources, LLC
Street, Apt. No.; or PO Box No.: 15455 Dallas Parkway, Ste. 600
City, State, ZIP+4: Addison, TX 75234

7011 1570 0003 3481 6038

SENDER: *COMPLETE THIS SECTION*

- Complete items 1, 2, and 3. Also complete item 4 if Restricted Delivery is desired.
- Print your name and address on the reverse so that we can return the card to you.
- Attach this card to the back of the mailpiece, or on the front if space permits.

1. Article Addressed to:

Kaiser-Francis Oil Company
P.O. Box 231468
Tulsa, OK 74121

Brinnstool

COMPLETE THIS SECTION ON DELIVERY

A. Signature
X Illegible ☐ Agent ☐ Addressee

B. Received by (Printed Name)
C. Date of Delivery

D. Is delivery address different from item 1? ☐ Yes
If YES, enter delivery address below: ☐ No

3. Service Type
☒ Certified Mail ☐ Express Mail
☐ Registered ☐ Return Receipt for Merchandise
☐ Insured Mail ☐ C.O.D.

4. Restricted Delivery? (Extra Fee) ☐ Yes

2. Article Number (Transfer from service label): 7011 1570 0003 3481 6014

PS Form 3811, February 2004 Domestic Return Receipt 102595-02-M-1540

U.S. Postal Service™
CERTIFIED MAIL™ RECEIPT
(Domestic Mail Only; No Insurance Coverage Provided)
For delivery information visit our website at www.usps.com®
TULSA OK 74121 OFFICIAL USE

Postage	$ $1.70
Certified Fee	$2.95
Return Receipt Fee (Endorsement Required)	$2.35
Restricted Delivery Fee (Endorsement Required)	$0.00
Total Postage & Fees	$ $7.00

0602 03
Postmark Here
AUG 17 2012
08/17/2012

Sent To: Kaiser-Francis Oil Company
Street, Apt. No.; or PO Box No.: P.O. Box 21468
City, State, ZIP+4: Tulsa, OK 74121

7011 1570 0003 3481 6014

Jones, William V., EMNRD

From: Jones, William V., EMNRD
Sent: Friday, August 24, 2012 11:56 AM
To: 'Kay Havenor'
Subject: RE: Disposal application from Delaware Water Company, LLC: Brininstool 25 Federal #1 30-025-37582 Bell and Cherry perfs from 5223 to 7380 feet

Hello Kay,
By unbounded, we mean a footage range between two cement plugs either in an open hole or a "casing-hole" annulus – and in context it would be a wider interval than the interval being applied for disposal.

If you do need to provide supplemental notification, it would probably be a one page letter explaining to the "affected persons" about this unbounded interval and asking if they had any problem with it. Before you do this, please send responses to the other questions and I will talk this over with the boss and attorney here.

From: Kay Havenor [mailto:khavenor@georesources.com]
Sent: Friday, August 24, 2012 11:16 AM
To: Jones, William V., EMNRD
Subject: Re: Disposal application from Delaware Water Company, LLC: Brininstool 25 Federal #1 30-025-37582 Bell and Cherry perfs from 5223 to 7380 feet

Will,
Thank you for the comments. I have a question in regard to part of (4) below. " . . . you could re-advertise this disposal well for the entire unbounded interval. I don't understand what the "unbounded interval" would be. When you have a moment would you explain?
Kay

At 11:43 AM 8/16/2012, you wrote:

Hello Dr. Havenor,
Just reviewed your application and had a few comments and requests,

(1) For the notices – Would you please also send notice to Endurance and Kaiser Francis as relatively nearby Delaware producers.
(2) Please let us know at which depth interval (and member name) is the nearest Delaware production laterally away from this well site.
(3) Do you plan to squeeze the 4-1/2 – 7 inch annulus over the top of your disposal interval or leave it open? Would you send a summary of the planned re-entry procedure that has this info on it?
(4) There is one well in the AOR that may not have isolation of your proposed disposal depth range – the file is a bit unclear but it seems the 30-025-25473 well has open 9-1/2 inch hole to 7-5/8 inch casing annulus across the entire Delaware section. The well may be relatively easy to re-enter and squeeze to isolate your interval. Alternatively, depending on the answer to (2) above, you could re-advertise this disposal well for the entire unbounded interval. Let me know what Delaware Water Company will agree to do.
(5) I don't see this operator as being listed in my available places to look to verify the Rule 5.9 issues. Which probably means this entity does not yet operate wells. Please send me some proof that Delaware Water Company, LLC has a bond in place to operate in NM. Dorothy Phillips of this office has all this sort of data – please get something from her I can put in the file.

JAMES BRUCE
ATTORNEY AT LAW

POST OFFICE BOX 1056
SANTA FE, NEW MEXICO 87504

369 MONTEZUMA, NO. 213
SANTA FE, NEW MEXICO 87501

(505) 982-2043 (Phone)
(505) 660-6612 (Cell)
(505) 982-2151 (Fax)

jamesbruc@aol.com

September 19, 2012

Via fax

Jami Bailey, Director
Oil Conservation Division
1220 South St. Francis Drive
Santa Fe, New Mexico 87505

Re: Delaware Water Company, LLC

Administrative applications to convert the Tophat AJQ State Well No. 1 and the Brinninstool 25 Fed. Well No. 1 to salt water disposal, Lea County, New Mexico

Dear Ms. Bailey:

Devon Energy Production Company, L.P. ("Devon") previously filed objections to the above applications. Devon now withdraws its objections, and consents to the applications being approved administratively.

Very truly yours,

James Bruce

James Bruce

Attorney for Devon Energy Production Company, L.P.

Jones, William V., EMNRD

From: Kay Havenor <khavenor@georesources.com>
Sent: Saturday, October 27, 2012 11:39 AM
To: Jones, William V., EMNRD
Subject: Brininstool SWD/Delaware Water Co.
Attachments: Response OCD on 5 problems in wells.pdf; Re-entry program Brininstool Fed SWD-1.pdf

The following were originally emailed 8/24/2012 - the unanswered item 4 was the question as to Delaware Water's willingness to re-plug the Trainer well. Re-plugging Trainer would be OK and preferable to re-submital..
Kay 10/27/2012

Mr. Jones,

Attached please find a partial response to your comments/questions on 30-025-37582 Brininstool 25 Federal #1 C-108.

Kay

Kay C. Havenor, Ph.D., PG. CPG
GeoScience Technologies
904 Moore Ave
Roswell, NM 88201-1144
(575) 626-4518

Jones, William V., EMNRD

From: Kay Havenor <khavenor@georesources.com>
Sent: Saturday, October 27, 2012 11:17 AM
To: Jones, William V., EMNRD
Subject: Brininstool 25 Fed #1

Will, please just delete the message below. I found my stuff, and found my response was delayed by the protest. It was a period in August where my emails were not getting through to you. Delaware Water will re-plug the Trainer well. I will resend my responses to your 5 points of 8/16/2012. My apologies.
Kay

Good morning Mr. Jones,

One of the last communications on the Delaware Waterr Company, LLC: Brininstool 25 Federal #1 30+025+37582 Bell and Cherry Canyon perfs 5223-7380 C-108 presented the question asking if Delaware Water would be willing to re-enter and properly P&A one of the Trainer adjacent wells. First, I am unable to locate that email, or the response I thought was sent that Delaware Water would do that. About then Devon protested (and I appear to have slept through that also). Now that Devon has reportedly withdrawn the Brininstool protest, where do we stand on that C-108 application?

Maybe the morning is not all that great after all!

Kay

Kay C. Havenor, Ph.D., PG. CPG
GeoScience Technologies
904 Moore Ave
Roswell, NM 88201-1144
(575) 626-4518

Injection Permit Checklist (11/15/2010)

WFX____ PMX____ SWD 1364 Permit Date 11/4/12 UIC Qtr (O/N/D)

Wells 1 Well Name(s): BRININSTOOL 25 Federal #1

API Num: 30-0 25-37582 Spud Date: 1/29/06 New/Old: N (UIC primacy March 7, 1982)

Footages 1980FNL/660FEL Unit H Sec 25 Tsp 23S Rge 33E County LEA

General Location: 19 mi W. of JAL

Operator: Delaware Water Company, LLC Contact Kay Havenor

OGRID: 290484 RULE 5.9 Compliance (Wells)____ (Finan Assur)____ IS 5.9 OK?

Well File Reviewed ___ Current Status: Morrow Test, P&AED

Planned Work to Well:

Diagrams: Before Conversion ✓ After Conversion ✓ Elogs in Imaging File:

Well Details:	Sizes Hole.....Pipe	Setting Depths	Stage Tool	Cement Sx or Cf	Cement Top and Determination Method
New __Existing __Surface	17 1/2 13 3/8	865'	—	470+250	CIRC w/ 1"
New__Existing __Interm	12 1/4 9 5/8	5127'	—	1700 SX	CIRC
New__Existing __ LongSt	8 3/4 7"	11,908'	7992' 6407'	~~1315~~ SX	CIRC/4500' EST
New__Existing ~~Liner~~	~~8 3/4 7"~~			145 SX	~~4500'~~
New__Existing Liner ~~OpenHole~~	6 1/8 4 1/2	14033 (14040 TVD)		275 SX	10,380 CBL

Depths/Formations:	Depths, Ft.	Formation	Tops?
Formation(s) Above	5152	LAMAR	✓
Injection TOP:	5223	Bell C.	Max. PSI 1045 OpenHole___ Perfs ✓
Injection BOTTOM:	7380	Cherry C.	Tubing Size 2 7/8 Packer Depth 5173'
Formation(s) Below	7487 8725 6008	Brushy C. B.S. Cherry C	✓ ✓ ✓

See Nearby N. Bell Lake, DEL, & Bell Lake, Del Pools

5223 10,946

~~Capitan Reef?~~ ~~(Potash? Noticed?)~~ ~~[WIPP? Noticed?]~~ Salado Top/Bot 1600' 5580' + Castile ~~Cliff House?~~

Fresh Water: Depths: <150' Formation QAL Wells? NO Analysis? NO Affirmative Statement ✓

Disposal Fluid Analysis? ✓ Sources: Brushy C. & B.S. (Commercial)

Disposal Interval: Analysis? ____ Production Potential/Testing: ✓

Notice: Newspaper Date 6/23/12 Surface Owner Brininstool & L Rock LLC ✓ Mineral Owner(s) BLM ✓

RULE 26.7(A) Affected Persons: XTO / Dev / Chesa. (6/23/12)

AOR: Maps? ✓ Well List? ✓ Producing in Interval? NO Wellbore Diagrams? ✓

.....Active Wells 0 Repairs? 0 Which Wells? —

.....P&A Wells 3 Repairs? 1 Which Wells? 30-025-25473 ~~30-025-34162~~

Issues: Run Survey; Send Notice to Endurance & KP

Request Sent ____ Reply: ____