~~AMEND CTB~~ 10/25/99
PLC-[redacted] 158

September 30, 1999

New Mexico Oil Conservation Division
Department of Energy and Minerals
State of New Mexico
2040 South Pacheco
Santa Fe, NM 87501

4

Att: Mark Ashley, Engineering Unit

RE: **Conoco, Inc.**, SEMU Well #134, SEMU Well #135, SEMU Well #136,
Lea County, New Mexico, Amendment to Surface Commingling,
Administrative Order CTB-488

Dear Mark,

Conoco, Inc. has received permission to commingle the above referenced wells, which were drilled during the past 60 days. In our application we anticipated that each of the wells would be completed in the North, Hardy Strawn pool. Wells #134 and #135 have been completed in the Strawn zone, Well #136 looks to be potentially productive in the Abo only. We anticipate completing and placing Well #136 in the Southeast, Monument -Abo pool.

Please see attached a copy of the distillation report (Exhibit A) for the Conoco, Inc., Hardy 36 State, Well #7 from an Abo completion. The gravity of the Strawn completions is 36.6, the gravity of the Abo completion was 39.3, both being sweet crude. The anticipated commingled production will be stored and measured at the "SEMU Strawn" common tank battery facility located in the SW/4 NE/4 (Unit G) of Section 25, Township 20 South, Range 37 East, NMPM, Lea County, New Mexico. Each well will have its own three phase separator, where the oil, water and gas will be separated. The gas will be measured with an orifice meter, the oil will be measured with a positive displacement meter, and the water will be measured with a turbine meter. Please see "Application to Surface Commingle: SEMU Strawn Central Battery Simplified Method of Operation" attached, for complete details of oil and gas measurement procedures (Exhibit B).

Ownership is as described in "Application to Surface Commingle; SEMU Strawn Central Battery" (Exhibit C). I have also enclosed copies of the "SEMU Strawn Proposed Commingling Simplified Plot Plan" (Exhibit D) and the tank battery diagram (Exhibit E).

Please let me know if you need any further information in order to process this application. Thank you.

Yours truly,

Ann E. Ritchie, Regulatory Agent (1-800-432-2967), (915) 682-1458-fax
Conoco, Inc.
10 Desta Dr., Suite 100W
Midland, TX 79705

Attachments/cc: Reesa Wilkes-Conoco/Midland;Bureau of Land Management-Roswell

"Exhibit A"

Martin Water Laboratories, Inc.
WATER CONSULTANTS SINCE 1953
BACTERIAL AND CHEMICAL ANALYSES

P. O. BOX 1468
MONAHANS, TEXAS 79756
(915) 943-3234 or 563-1040

709 W. INDIANA
MIDLAND, TEXAS 79701
(915) 683-4521

To: Mr. Damian Barrett
10 Desta Drive, Suite 100W
Midland, TX 79705-4500

Laboratory No. 029553
Sample received 2-7-95
Results reported 2-8-95

Company: Conoco Inc.
County: Lea, NM
Field: ~~Strawn~~ Abo
Lease: Hardy State #7

South Skaggs Abo
Skaggs: Abo South 20006
1st choice → Abo East 60006
404

Subject: Oil sample from Hardy State #7 submitted for ASTM distillation.

DISTILLATION

IBP	120°F.
5%	170°F.
10%	202°F.
20%	255°F.
30%	326°F.
40%	413°F.
50%	510°F.
60%	582°F.
70%	629°F.
75%	634°F.
80%	650°F.
85%	661°F.
90%	662°F.
End Point	662°F.
% Residue	3.00%
% Recovery	97.00%

YIELD

Gasoline, 300°F.	28.00%
Gasoline, 350°F.	5.00%
Gasoline, 400°F.	6.00%
Total Gasoline	39.00%
Kerosene, 525°F.	14.00%
Diesel, 650°F.	27.00%

SPECIAL TESTING

Gravity, °API	39.3

Remarks: Please feel free to contact us for any details or discussions concerning the above results.

Greg Ogden

Greg Ogden, B.S.

Application to Surface Commingle:
SEMU Strawn Central Battery Simplified Method of Operation "Exhibit B"

Three wells, SEMU 134, SEMU 135 and SEMU 136, will produce into the SEMU Strawn battery. Each well will have its own three phase separator, where the oil, water and gas will be separated. The gas will be measured with an orifice meter, the oil will be measured with a positive displacement meter, and the water will be measured with a turbine meter.

After the oil from each well has gone through its own positive displacement meter, the oil will normally flow into 500 barrel stock tanks. The oil will be sold via LACT and back allocated based upon the NMOCD's allocation formula.

Should the oil need to be treated to achieve saleable oil, the LACT will divert bad oil back into a common horizontal heater treater. Each/all wells will have the ability to divert their oil dump line to the heater treater. Such divert valves will be located downstream of the positive displacement meter that is used to measure oil production. After heating the oil in the treater, it will be dumped into the common 500 barrel stock tanks.

Gas will be measured with an orifice meter and an electronic flow computer. The gas from each well will then be allocated based upon the gas sales meter for the SEMU Strawn battery. Gas from the heater treater and the vapor recovery unit will be sold via the same gas sales meter for the SEMU Strawn battery.

"Exhibit C"

Application to Surface Commingle
SEMU Strawn Central Battery

	Strawn	Strawn	Abo
	Well Name		
Working Interest Owners	SEMU 134	SEMU 135	SEMU 136
Conoco Inc.	50%	50%	~~37.50%~~ 50%
Chevron USA	25%	25%	~~18.75%~~ 25%
Arco Permian	25%	25%	~~18.75%~~ 25%

Royalty Interest Owners

SEMU 134	Lease Numbers
US Government Federal Lease	LC-031695A
SEMU 135	
State of New Mexico	Tract 2 B-11349
US Government Federal Lease	Tract 1 LC-031696A
SEMU 136	
State of New Mexico	~~[illegible]~~ Royalty Abo Interests
US Government Federal Lease	Tract 1 LC-031696A

Well Legal Description

SEMU 134
455' FWL, 1650' FSL, Sec. 30, T-20S, R-38E, Lea County, NM North; Hardy, Strawn

SEMU 135
1990' FEL, 1330' FSL, Sec. 25, T-20S, R-37E, Lea County, NM North; Hardy, Strawn

SEMU 136
1090' FWL, 1980' FSL, Sec. 25, T-20S, R-37E, Lea County, NM Southeast, Monument; Abo

Post-it® Fax Note 7671	Date 9-29-99	# of pages ▶ 2
To Ann Ritchie	From Tim S.	
Co./Dept.	Co.	
Phone #	Phone # 686-6180	
Fax # 682-1458	Fax # X-6586	

"Exhibit D"

SEMU Strawn Proposed Commingling Simplified Plot Plan

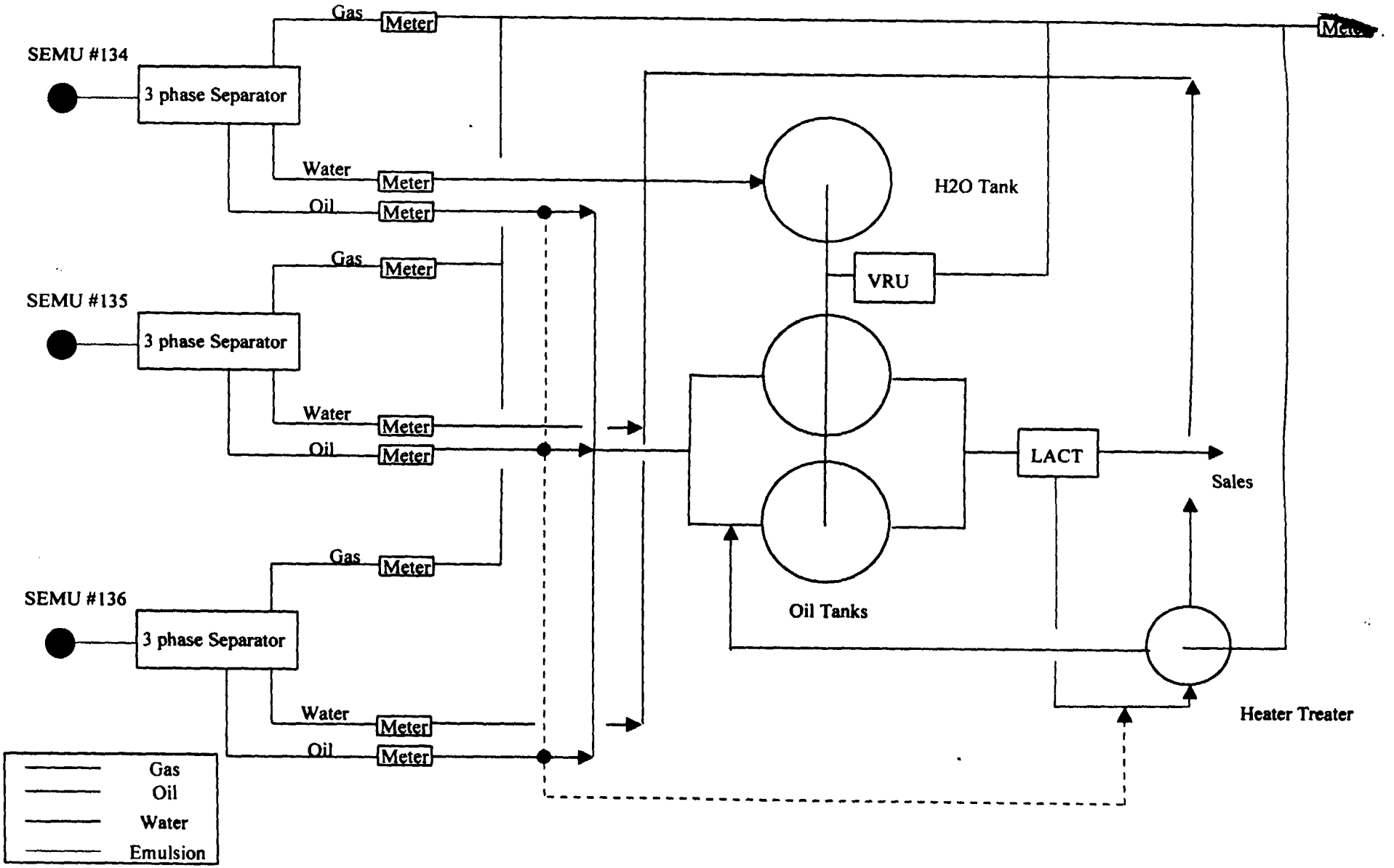

"Exhibit E"

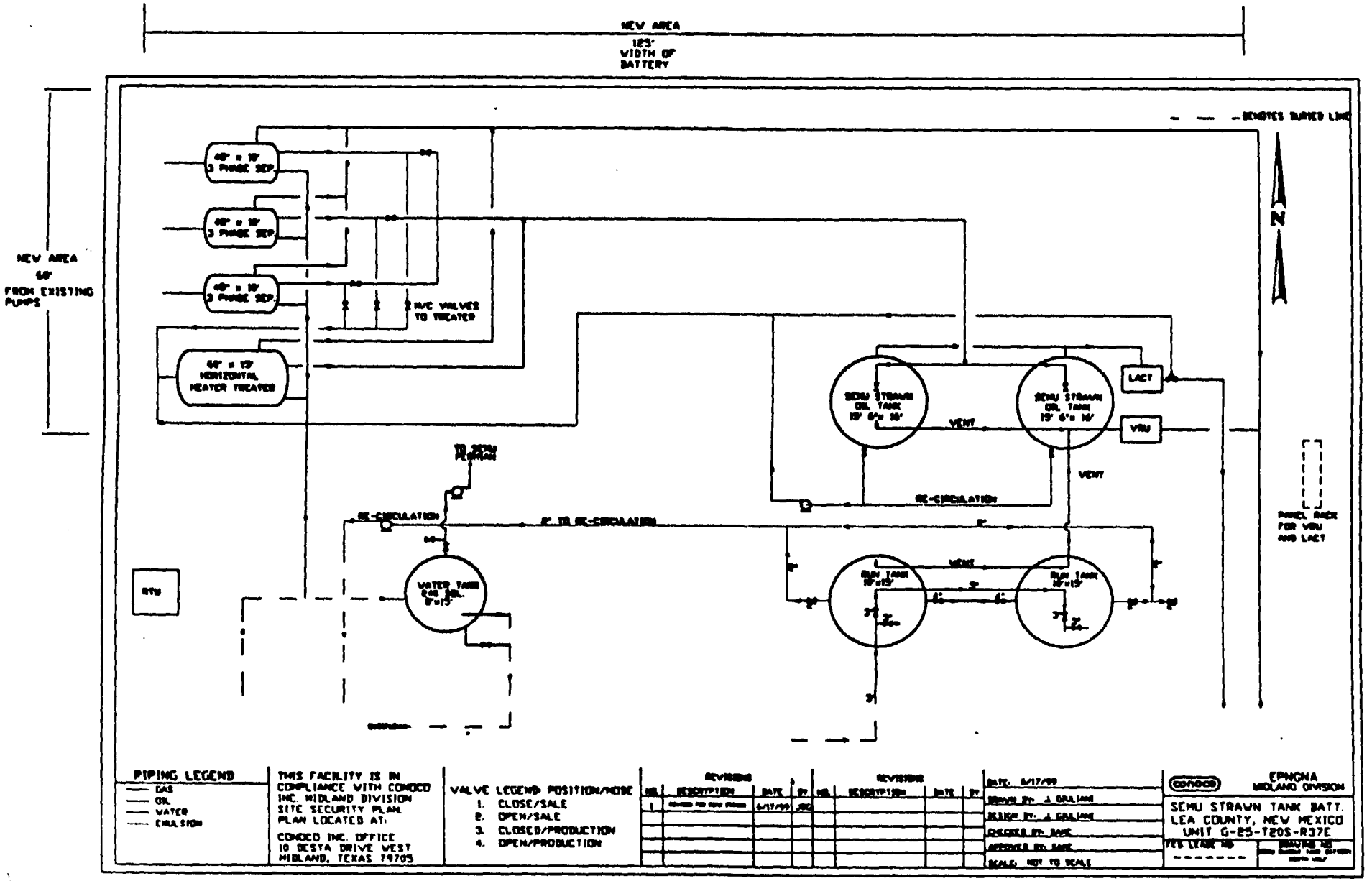
NEW AREA
125'
WIDTH OF
BATTERY
NEW AREA
60'
FROM EXISTING
PUMPS
3 PHASE SEP.
3 PHASE SEP.
3 PHASE SEP.
W/C VALVES
TO TREATER
HORIZONTAL
HEATER TREATER
SEMU STRAWN
OIL TANK
SEMU STRAWN
OIL TANK
LACT
VRU
VENT
VENT
RE-CIRCULATION
RE-CIRCULATION
2" TO RE-CIRCULATION
TO SEMU
PERMIAN
WATER TANK
RUN TANK
RUN TANK
VENT
PANEL RACK
FOR VRU
AND LACT
N
PIPING LEGEND
GAS
OIL
WATER
EMULSION
THIS FACILITY IS IN
COMPLIANCE WITH CONOCO
INC. MIDLAND DIVISION
SITE SECURITY PLAN.
PLAN LOCATED AT:
CONOCO INC. OFFICE
10 DESTA DRIVE WEST
MIDLAND, TEXAS 79705
VALVE LEGEND POSITION/MODE
1. CLOSE/SALE
2. OPEN/SALE
3. CLOSED/PRODUCTION
4. OPEN/PRODUCTION
REVISIONS
NO. DESCRIPTION DATE BY
6/17/99 JBG
DATE: 6/17/99
DRAWN BY: J. GALIANO
DESIGN BY: J. GALIANO
CHECKED BY: BARE
APPROVED BY: BARE
SCALE: NOT TO SCALE
CONOCO
EPNGNA
MIDLAND DIVISION
SEMU STRAWN TANK BATT.
LEA COUNTY, NEW MEXICO
UNIT G-25-T20S-R37E

NEW MEXICO ENERGY, MINERALS
& NATURAL RESOURCES DEPARTMENT

OIL CONSERVATION DIVISION
2040 South Pacheco Street
Santa Fe, New Mexico 87505
(505) 827-7131

ADMINISTRATIVE ORDER CTB-488

Conoco, Inc.
10 Desta Drive., Suite 100W
Midland, Texas 79705

Attention: Ms. Ann E. Ritchie

The above named company is hereby authorized to commingle North Hardy-Strawn Pool production from the following leases:

Lease:	SEMU Well No. 134 (Federal Lease No. LC-031695A)
Description:	SW/4 of Section 30, Township 20 South, Range 38 East, NMPM,
Lease:	SEMU Well No. 135 (Federal Lease No. LC-031696A (Tract 1) and B-11349 (Tract 2))
Description:	SE/4 of Section 25, Township 20 South, Range 37 East, NMPM, and
Lease:	SEMU Well No. 136 (Federal Lease No. LC-031696A (Tract 1), B-230 (Tract 2) and E-1402 (Tract 3))
Description:	SW/4 of Section 25, Township 20 South, Range 37 East, NMPM,

all located in Lea County, New Mexico.

Production shall be allocated to each lease by separately metering the production from each lease prior to commingling.

NOTE: This installation shall be installed and operated in accordance with the applicable provisions of Rule 309-B of the Division Rules and Regulations and the Division "Manual for the Installation and Operation of Commingling Facilities." It is the responsibility of the producer to notify the transporter of this commingling authority.

REMARKS: The commingled production shall be stored and measured at the SEMU Strawn common tank battery facility located in the SW/4 NE/4 (Unit G) of Section 25, Township 20 South, Range 37 East, NMPM, Lea County, New Mexico.

FURTHER: The operator shall notify the Hobbs District Office of the Division upon implementation of the commingling process.

PROVIDING: Validation of this authority shall be accomplished by like approval from the Bureau of Land Management.

DONE at Santa Fe, New Mexico, on this 21st day of July, 1999.

LORI WROTENBERY,
Division Director

LW/MWA/kv

cc: Oil Conservation Division - Hobbs
Bureau of Land Management - Carlsbad

October 6, 1999

New Mexico Oil Conservation Division
Department of Energy and Minerals
State of New Mexico
2040 South Pacheco
Santa Fe, NM 87501

Att: Mark Ashley, Engineering Unit

RE: Conoco, Inc., SEMU, Wells #134, 135, and 136, Lea County, New Mexico
Amendment to Surface Commingling Administrative Order CTB-488 filed
September 30, 1999

Dear Mark,

Concerning the above referenced Surface Commingling application, the working interest owners are Conoco, Inc., Chevron USA and Arco Permian. All three parties have agreed to the completion of the SEMU, Well #136 being completed in the Abo pool rather than the anticipated Strawn pool. The existing Surface Commingling permit established that each of the wells were to be completed in the Strawn; after having drilled Well #136 – the Strawn is non-productive and the well is to be completed in the SE Monument Abo pool. The royalty interest owner for each well is the Bureau of Land Management and has been notified of the change.

Thank you for your assistance.

Yours truly,

Ann E. Ritchie, Regulatory Agent
Conoco, Inc.
10 Desta Dr., Suite 100W
Midland, TX 79705

Cc: Reesa Wilkes/Conoco-Midland

Form 3160-5
(June 1990)

UNITED STATES
DEPARTMENT OF THE INTERIOR
BUREAU OF LAND MANAGEMENT

N.M. Oil Cons. Division
1625 N. French Dr.
Hobbs, NM 88240

FORM APPROVED
Budget Bureau No. 1004-0135
Expires: March 31,1993

5. Lease Designation and Serial No.
LC 031695A

6. If Indian, Allotee or Tribe Name

SUNDRY NOTICES AND REPORTS ON WELLS

Do not use this form for proposals to drill or to deepen or reentry to a different reservoir. Use "APPLICATION FOR PERMIT—" for such proposals

SUBMIT IN TRIPLICATE

7. If Unit or CA, Agreement Designation
SEMU

1. Type of Well
☒ Oil Well ☐ Gas Well ☐ Other Injection

8. Well Name and No.
[redacted]35, & 136

2. Name of Operator
Conoco, Inc.

9. API Well No.
30-025-below

3. Address and Telephone No.
10 Desta Drive Ste. 100W, Midland, Tx. 79705-4500 (915) 686-5580/684-6381

10. Field and Pool, or Exploratory Area
North Hardy Strawn/SE Mon Abo

4. Location of Well (Footage, Sec., T. R. M. or Survey Description)
below for each well

11. County or Parish, State
Lea, N.M.

12. CHECK APPROPRIATE BOX(s) TO INDICATE NATURE OF NOTICE, REPORT, OR OTHER DATA

TYPE OF SUBMISSION	TYPE OF ACTION	
☒ Notice of Intent	☐ Abandonment	☐ Change of Plans
☐ Subsequent Report	☐ Recompletion	☐ New Construction
☐ Final Abandonment Notice	☐ Plugging Back	☐ Non-Routine Fracturing
	☐ Casing Repair	☐ Water Shut-Off
	☐ Altering Casing	☐ Conversion to Injection
	☒ Other Surface Commingling	☐ Dispose Water
		Note: Report results of multiple completion on Well Completion or Recompletion Report and Log form.)

13. Describe Proposed or Completed Operations (Clearly state all pertinent details, and give pertinent dates, including estimated date of starting any proposed work. If well is directionally drilled, give subsurface locations and measured and true vertical depths for all markers and zones pertinent to this work.)*

Application has been made through the Oil Conservation Division to commingle the following wells as described:
SEMU #134, North Hardy, Strawn pool, API#30 025 34382, 1650' fSL & 450' FWL, Sec 30, T20S, R38E, Lea County, NM
SEMU #135, North Hardy, Strawn pool, API#30 025 34666, 1330' FSL & 1980' FEL, Sec 25, T20S, R37E, Lea County, NM
SEMU #136, SE Monument-Abo pool, API #30 025 34667, 1980' FSL & 1090' FWL, Sec 25, T20S, R37E, Lea County, NM
Six copies of the commingling application are submitted with this Sundry notice.

PLC-158

14. I hereby certify that the foregoing is true and correct.

Signed [signature] Title Ann E. Ritchie Regulatory Agent Date October 25, 1999

(This space for Federal or State office use)

Approved by (ORIG. SGD.) ALEXIS C. SWOBODA Title PETROLEUM ENGINEER Date NOV 03 1999

Conditions of approval if any:

BLM(6)

Title 18 U.S.C. Section 1001, makes it a crime for any person knowingly and willfully to make to any department or agency of the United States any false, fictitious or fraudulent statements or representations as to any matter within its jurisdiction.