Union Oil Company of California

205 EAST WASHINGTON AVENUE LOVINGTON, NEW MEXICO 88260

MAIN OFFICE OCC

1964 JUN 25 AM 7 58

June 22, 1964 WF-1-176

Mr. A. L. Porter, Jr.
Secretary-Director
New Mexico Oil Conservation Commission
P. O. Box 871
Santa Fe, New Mexico

Include authorization of unorthodox locations in order

Re: Expansion of Waterflood Project Area, South Caprock Queen Unit, Chaves County, New Mexico (Case No. 2032, Orders R-1729 and R-1729-A)

Dear Mr. Porter:

The Union Oil Company of California, as Operator of the South Caprock Queen Unit in Chaves County, hereby requests administrative approval for the expansion of the waterflood project area and approval to drill and complete two new water injection wells. This request is submitted pursuant to the provisions of Rule 701 of the Rules and Regulations of the New Mexico Oil Conservation Commission.

The new wells proposed for injection service are to be located as follows:

1. Tract 40, Well 11-29 located 3200' from the North line and 1400' from the West line, Section 29, T-15-S, R-31-E, N.M.P.M.
2. Tract 49, Well 1-31 located 230' from the North line and 1090' from the East line, Section 31, T-15-S, R-31-E, N.M.P.M.

Water injection at the South Caprock Queen Unit commenced on May 23, 1961 into ten wells situated along the contact between the gas cap and the oil zone. The purpose of this initial pattern was to prevent the migration and loss of recoverable secondary oil into the gas cap. Since May, 1961, the project has been expanded twelve times. The expansion orders are tabulated below:

Expansion No.	Date	Administrative Order No.	No. of New Injection Wells
1	4-62	WFX-102	7
2	8-62	WFX-116	5
3	12-62	WFX-124	6
4	1-63	WFX-127	3
5	3-63	WFX-134	4
6	5-63	WFX-136	1
7	6-63	WFX-138	7
8	9-63	WFX-152	9
9	10-63	WFX-158	2
10	12-63	WFX-163	7
11	2-64	WFX-164	3
12	3=64	R-2660	9

As of June 1, 1964, 17,994,494 barrels of water have been injected into 70 wells.

Stimulation from the water injection program has recently been observed in two additional producing wells in the project. The proposed injection wells are diagonal offsets to the stimulated wells. The location of the subject wells is shown on the attached plat (Exhibit I). The proposed injection wells are a part of the master plan of operation for the project as presented at the hearing on Case No. 2032. This was Union's application for authority to institute a waterflood project in the South Caprock Queen Unit.

In support of this application, the following exhibits are attached:

Exhibit I: A plat of the South Caprock Queen Unit showing the present project area, the proposed expansion of the project area and the location of all injection and producing wells. The newly stimulated wells and the wells to be drilled for injection service are identified on the plat.

Exhibit II: Commission Form C-116 showing production tests for the stimulated wells both before and after being affected by the waterflood.

Exhibit III: The Casing Programs for the proposed injection wells.

Exhibit IV: Diogrammatic sketches of the proposed injection wells showing casing strings, casing diameters, setting depths, approximate tops of cement and perforations. Also shown are proposed tubing string including depth, diameter and packer. The proposed injection wells will be perforated in the Queen Sand as shown on the diagram. The water used for injection is either fresh water produced from the Ogalalla Sand or a mixture of this fresh water and produced Queen Sand brine. Anticipated injection rates and pressures are shown on the diagrams.

There are no offset operators affected by the proposed expansion since this is a Unit operation.

The drilling of these wells is recommended in order to continue to maintain proper control of the advancing flood front. This will permit a more efficient sweep of the reservoir in this portion of the Unit.

By copy of this application, the State Engineer is being advised of the proposed drilling work. Attached is a copy of our transmittal letter to Mr. Irby of the State Engineer's Office.

Three copies of this letter and supporting exhibits are transmitted herewith, as requested in Rule 701. Please contact me if any additional information is required for this application.

Very truly yours

Richard H. Butler

Richard H. Butler
Unit Engineer

Attachments - 5
cc: Mr. Frank Irby
State Engineers Office

Form C- 116
Revised (12/1/55)

NEW MEXICO OIL CONSERVATION COMMISSION

EXHIBIT II

GAS-OIL RATIO REPORT

OPERATOR Union Oil Company of California POOL Caprock Queen (South Caprock Queen Unit)

ADDRESS 205 E. Washington, Lovington, N.M. MONTH OF January to June, 19 64

SCHEDULED TEST ..... COMPLETION TEST ..... SPECIAL TEST XXXX (Check One)

(See Instructions on Reverse Side) Tests to Verify Waterflood Stimulation

Lease	Well No.	Date of Test	Producing Method	Choke Size	Test Hours	Daily Allowable Bbls.	Production During Test			GOR Cu. Ft. Per Bbl.
							Water Bbls.	Oil Bbls.	Gas MCF	
1. Tract 48	15-30	3-29	P	-	24	18	0	17	TSTM	-
Tract 48	15-30	5-21	P	-	24	18	1	40	TSTM	-
2. Tract 48	5-29	1-5	P	-	24	3	0	2	TSTM	-
Tract 48	5-29	5-30	P	-	24	3	1	12	TSTM	-

No well will be assigned an allowable greater than the amount of oil produced on the official test.

During gas-oil ratio test, each well shall be produced at a rate not exceeding the top unit allowable for the pool in which well is located by more than 25 percent. Operator is encouraged to take advantage of this 25 percent tolerance in order that well can be assigned increased allowables when authorized by the Commission.

Gas volumes must be reported in MCF measured at a pressure base of 15.025 psia and a temperature of 60 degrees F. Specific gravity base will be 0.60.

Mail original and one copy of this report to the district office of the New Mexico Oil Conservation Commission. In accordance with Rule 301 and Appropriate Pool Rules.

(I certify that the information given is true and complete to the best of my knowledge.)

Date June 22, 1964

Union Oil Company of California
Company

By Richard H. Butler
Richard H. Butler
Unit Engineer
Title

EXHIBIT III

SOUTH CAPROCK QUEEN UNIT
Chaves County
CASING DATA FOR PROPOSED
NEW INJECTION WELLS

Note: All depths are approximate

I. Tract 40, Well 11-29
Location: 3200' FNL, 1400' FWL, Sec. 29, T-15-S, R-31-E, N.M.P.M.
Proposed TD: 3238'
Estimated Top of Queen: 3166'
Surface Casing: 8 5/8", J-55, 32#, new casing set at about 350' (into Red Beds) and cemented with 300 sacks (or enough to circulate).
Oil String: 4½", J-55, 9.5#, new casing cemented at 3238' w/200 sacks.
Estimated ETD: 3205'
Estimated Perforations: 3170' - 3180'
Tubing: 2", EUE, 8 rt, J-55 plastic lined w/tension packer on bottom set just above perforations. Annulus between casing and tubing to be filled with inhibited water for corrosion protection.

II. Tract 49, Well 1-31
Location: 230' FNL, 1090' FEL, Sec. 31, T-15-S, R-31-E, N.M.P.M.
Proposed TD: 3240'
Estimated Top of Queen: 3166'
Surface Casing: 8 5/8", J-55, 32#, new casing set at about 350' (into Red Beds) and cemented with 300 sacks (or enough to circulate).
Oil String: 4½", J-55, 9.5#, new casing cemented at 3240' w/200 sacks
Estimated ETD: 3210'
Estimated Perforations: 3168' - 3178'
Tubing: Same as Well 11-29

SOUTH CAPROCK QUEEN UNIT
PROPOSED NEW INJECTION WELL

(1) Tract 40, Well 11-29
Location: 3200' FNL and 1400' FWL
Sec. 29, T-15S, R-31E, NMPM

Anticipated Injectivity:
1,000 B/D at 1,000 psig

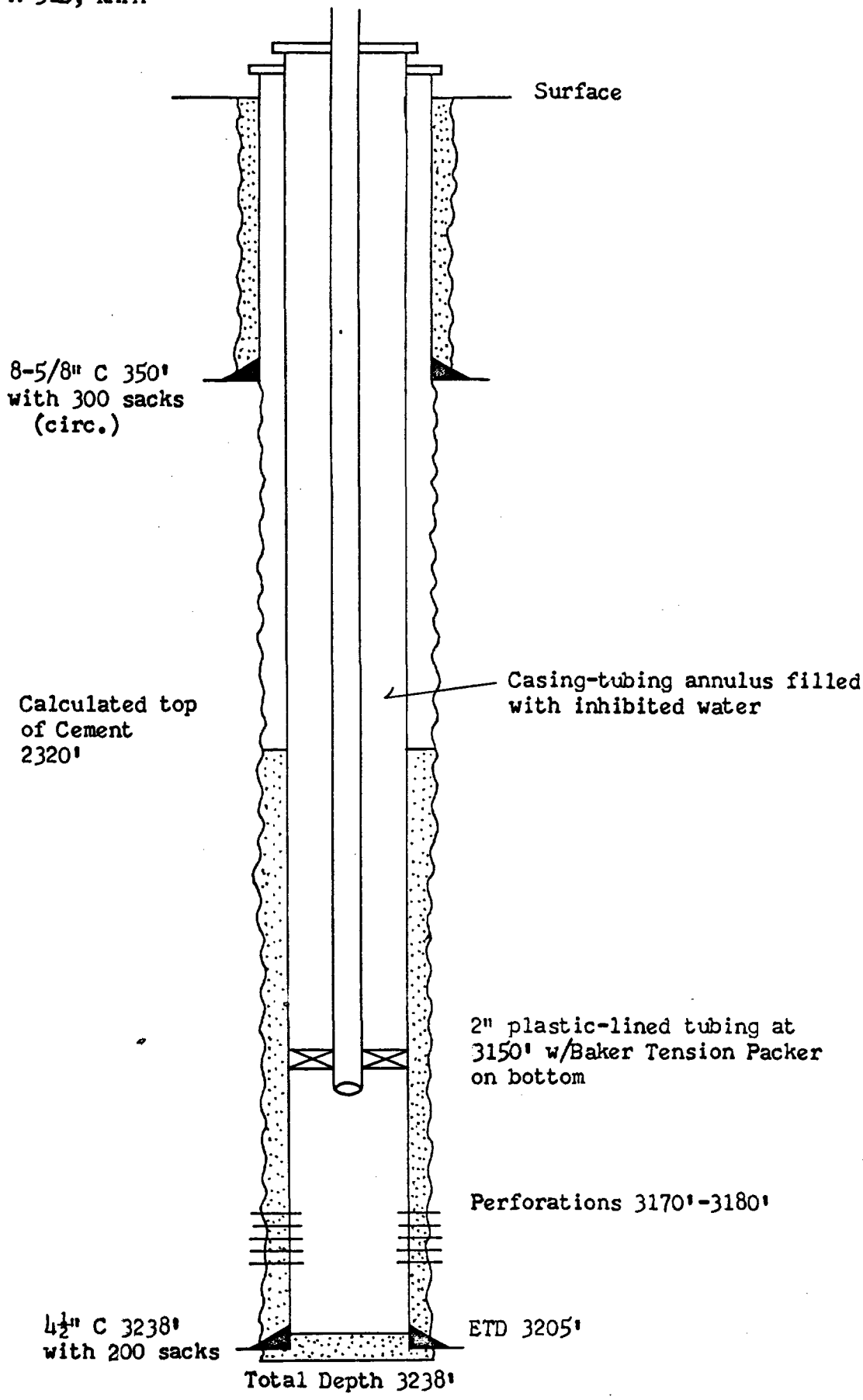

Note: All Depths Estimated

SOUTH CAPROCK QUEEN UNIT
PROPOSED NEW INJECTION WELL

(2) Tract 49, Well 1-31
Location: 230' FNL and 1090' FEL
Sec. 31, T-15S, R-31E, NMPM

Anticipated Injectivity:
1,000 B/D at 1,000 psig

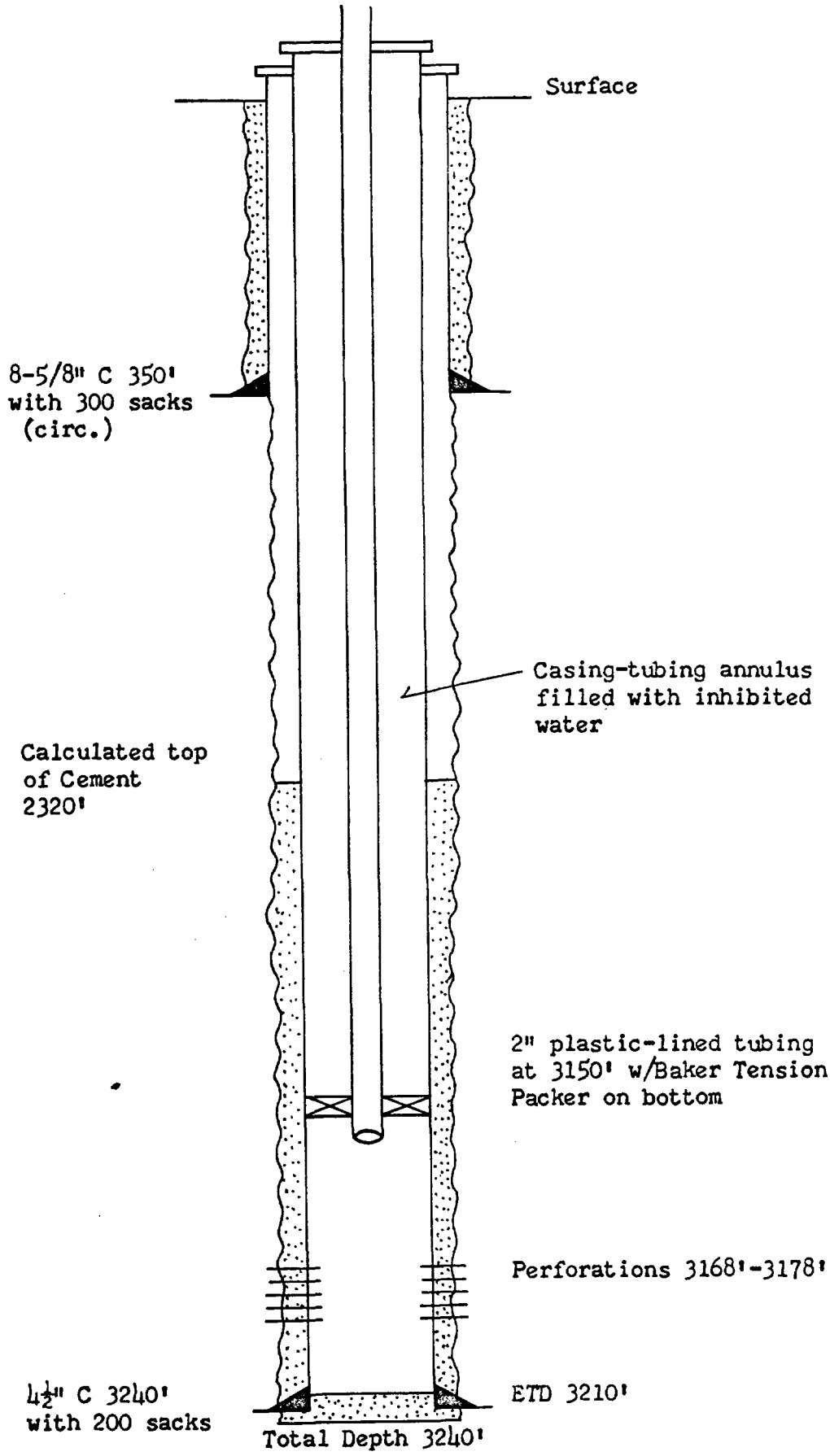

Note: All Depths Estimated

Union Oil Company of California

205 EAST WASHINGTON AVENUE LOVINGTON, NEW MEXICO 88260

June 22, 1964

Mr. Frank Irby
Chief of Water Rights Division
State Engineer's Office
State Capitol Building
Santa Fe, New Mexico

Re: Casing Data For Proposed Water Injection Wells, South Caprock Queen Unit, Chaves County, New Mexico

Dear Mr. Irby:

Attached please find a copy of an application submitted by the Union Oil Company of California to the New Mexico Oil Conservation Commission requesting administrative approval to expand our waterflood project in the South Caprock Queen Unit. This expansion will include the drilling of two more water injection wells. The application is in accordance with the provisions of Rule 701 of the Rules and Regulations of the New Mexico Oil Conservation Commission.

Exhibits III and IV of the attached application include a summary of casing information on the wells to be drilled for injection service. The wells will be completed with plastic lined tubing and tension packers set just above the perforations in the Queen Sand. The annulus between the casing (oil string) and the tubing will then be filled with an inhibited water for protection against corrosion. The maximum anticipated surface injection pressure for the two wells will be 1000 psig.

If you are in agreement with this proposal, we would appreciate your so notifying the Secretary-Director of the New Mexico Oil Conservation Commission as soon as possible. Thank you for your consideration of this matter.

Very truly yours,

Richard H. Butler

Richard H. Butler
Unit Engineer

RHB/jj
Attachments - 5
cc: Mr. A. L. Porter, Jr.

AIN OFFICE OCC

STATE OF NEW MEXICO

1964 JUN 29 AM 7:36

STATE ENGINEER OFFICE

SANTA FE

S. E. REYNOLDS
STATE ENGINEER

June 26, 1964

ADDRESS CORRESPONDENCE TO:
STATE CAPITOL
SANTA FE, N. M.

Mr. A. L. Porter, Jr.
Secretary-Director
Oil Conservation Commission
Santa Fe, New Mexico

Dear Mr. Porter:

Reference is made to the application of Union Oil Co., of California dated June 22, 1964 which seeks an expansion of their South Caprock Queen Water Flood Project in Chaves County, New Mexico (Orders R-1729 & R-1729-a).

After reviewing the application and exhibits 1 through 4, it appears that no threat of contamination to the fresh waters which may exist in the area will occur as a result of the proposal. Therefore, this office offers no objection to the granting of the application.

Yours truly,

S. E. Reynolds
State Engineer

By: Frank E. Irby
Frank E. Irby
Chief
Water Rights Div.

FEI/ma
cc-Union Oil Co. of Calif.
F. H. Hennighausen

LARGE FORMAT EXHIBIT HAS BEEN REMOVED AND IS LOCATED IN THE NEXT FILE