RELEASE 7·16·93

OIL CONSERVATION DIVISION
RECEIVED

'93 JUL 2 AM 8 54

July 1, 1993

Bureau of Land Management
1717 W. 2nd
Roswell, New Mexico 88201

Case 10798

Attention: John Simitz
Unitization Studies

Re: Application for Expansion of Waterflood;
Order R-4019; R-4020
Texaco Exploration and Production Inc.
Cooper Jal Unit, Jalmat and Langlie Mattix Formations
T-24-S, R-36 & 37-E
Lea County, New Mexico

Gentlemen:

Texaco Exploration and Production Inc. respectfully requests administrative approval for the expansion of the Cooper Jal Unit. The nine wells designated in this application will be converted from existing production wells or will be modified injectors, for the purpose of secondary recovery by water injection. This work will help maintain reservoir pressure and recover additional oil reserves that would otherwise be left in place.

Texaco E&P Inc. respectfully requests that the Cooper Jal Unit Waterflood Project covered by R-4019 and R-4020 be expanded to include the conversion of the nine injection wells. Administrative approval, or a NMOCD sponsored hearing is requested so that the necessary operations can be advanced in a prudent manner. If you have any questions concerning the application, please contact Michael Alexander at (505) 397-0411.

Yours very truly,

Terry L. Frazier
Hobbs Area Manager

TLF:mca

Attachments
File
Chrono

STATE OF NEW MEXICO
ENERGY AND MINERALS DEPARTMENT

OIL CONSERVATION DIVISION
POST OFFICE BOX 2088
STATE LAND OFFICE BUILDING
SANTA FE, NEW MEXICO 87501

FORM C-108
Revised 7-1-81

Case 10798

APPLICATION FOR AUTHORIZATION TO INJECT

I. Purpose: ☐ Secondary Recovery ☐ Pressure Maintenance ☐ Disposal ☐ Storage
Application qualifies for administrative approval? ☐ yes ☐ no

II. Operator: Texaco Exploration & Production Inc.

Address: P. O. Box 730, Hobbs, New Mexico, 88240

MICHAEL ALEXANDER - ENG. 397-0411

Contact party: Terry Frazier, Area Manager Phone: (505) 397 - 0421

III. Well data: Complete the data required on the reverse side of this form for each well proposed for injection. Additional sheets may be attached if necessary.

IV. Is this an expansion of an existing project? XXX ☐ yes ☐ no
If yes, give the Division order number authorizing the project R-4019; R-4020.

V. Attach a map that identifies all wells and leases within two miles of any proposed injection well with a one-half mile radius circle drawn around each proposed injection well. This circle identifies the well's area of review.

* VI. Attach a tabulation of data on all wells of public record within the area of review which penetrate the proposed injection zone. Such data shall include a description of each well's type, construction, date drilled, location, depth, record of completion, and a schematic of any plugged well illustrating all plugging detail.

VII. Attach data on the proposed operation, including:

1. Proposed average and maximum daily rate and volume of fluids to be injected;
2. Whether the system is open or closed;
3. Proposed average and maximum injection pressure;
4. Sources and an appropriate analysis of injection fluid and compatibility with the receiving formation if other than reinjected produced water; and
5. If injection is for disposal purposes into a zone not productive of oil or gas at or within one mile of the proposed well, attach a chemical analysis of the disposal zone formation water (may be measured or inferred from existing literature, studies, nearby wells, etc.).

*VIII. Attach appropriate geological data on the injection zone including appropriate lithologic detail, geological name, thickness, and depth. Give the geologic name, and depth to bottom of all underground sources of drinking water (aquifers containing waters with total dissolved solids concentrations of 10,000 mg/l or less) overlying the proposed injection zone as well as any such source known to be immediately underlying the injection interval.

IX. Describe the proposed stimulation program, if any.

* X. Attach appropriate logging and test data on the well. (If well logs have been filed with the Division they need not be resubmitted.)

* XI. Attach a chemical analysis of fresh water from two or more fresh water wells (if available and producing) within one mile of any injection or disposal well showing location of wells and dates samples were taken.

XII. Applicants for disposal wells must make an affirmative statement that they have examined available geologic and engineering data and find no evidence of open faults or any other hydrologic connection between the disposal zone and any underground source of drinking water.

XIII. Applicants must complete the "Proof of Notice" section on the reverse side of this form.

XIV. Certification

I hereby certify that the information submitted with this application is true and correct to the best of my knowledge and belief.

Name: Terry Frazier Title Area Manager

Signature: Terry Frazier Date: 7/1/93

* If the information required under Sections VI, VIII, X, and XI above has been previously submitted, it need not be duplicated and resubmitted. Please show the date and circumstance of the earlier submittal. R-4019, August 19, 1970; R-4020, August 19, 1970

DISTRIBUTION: Original and one copy to Santa Fe with one copy to the appropriate Division district office

FOR OCD

III. WELL DATA

A. The following well data must be submitted for each injection well covered by this application. The data must be both in tabular and schematic form and shall include:

(1) Lease name; Well No.; location by Section, Township, and Range; and footage location within the section.

(2) Each casing string used with its size, setting depth, sacks of cement used, hole size, top of cement, and how such top was determined.

(3) A description of the tubing to be used including its size, lining material, and setting depth.

(4) The name, model, and setting depth of the packer used or a description of any other seal system or assembly used.

Division District offices have supplies of Well Data Sheets which may be used or which may be used as models for this purpose. Applicants for several identical wells may submit a "typical data sheet" rather than submitting the data for each well.

B. The following must be submitted for each injection well covered by this application. All items must be addressed for the initial well. Responses for additional wells need be shown only when different. Information shown on schematics need not be repeated.

(1) The name of the injection formation and, if applicable, the field or pool name.

(2) The injection interval and whether it is perforated or open-hole.

(3) State if the well was drilled for injection or, if not, the original purpose of the well.

(4) Give the depths of any other perforated intervals and detail on the sacks of cement or bridge plugs used to seal off such perforations.

(5) Give the depth to and name of the next higher and next lower oil or gas zone in the area of the well, if any.

XIV. PROOF OF NOTICE

All applicants must furnish proof that a copy of the application has been furnished, by certified or registered mail, to the owner of the surface of the land on which the well is to be located and to each leasehold operator within one-half mile of the well location.

Where an application is subject to administrative approval, a proof of publication must be submitted. Such proof shall consist of a copy of the legal advertisement which was published in the county in which the well is located. The contents of such advertisement must include:

(1) The name, address, phone number, and contact party for the applicant;

(2) the intended purpose of the injection well; with the exact location of single wells or the section, township, and range location of multiple wells;

(3) the formation name and depth with expected maximum injection rates and pressures; and

(4) a notation that interested parties must file objections or requests for hearing with the Oil Conservation Division, P. O. Box 2088, Santa Fe, New Mexico 87501 within 15 days.

NO ACTION WILL BE TAKEN ON THE APPLICATION UNTIL PROPER PROOF OF NOTICE HAS BEEN SUBMITTED.

NOTICE: Surface owners or offset operators must file any objections or requests for hearing of administrative applications within 15 days from the date this application was mailed to them.

NEW MEXICO OIL CONSERVATION DIVISION - Form C-108 , Cont'd

III. INJECTION WELL DATA

Cooper Jal Unit : Jalmat & Langlie Mattix Pools

112 - Unit Letter M,	330'FSL &	990'FWL,	Section 13,	T24S,	R36E
116 - Unit Letter M,	660'FSL &	660'FWL,	Section 18,	T24S,	R37E
122 - Unit Letter A,	330'FNL &	990'FEL,	Section 24,	T24S,	R36E
126 - Unit Letter G,	1650'FNL &	2310'FEL,	Section 24,	T24S,	R36E
132 - Unit Letter I,	2310'FSL &	990'FEL,	Section 24,	T24S,	R36E
151 - Unit Letter A,	771'FNL &	170'FEL,	Section 24,	T24S,	R36E
205 - Unit Letter H,	1980'FNL &	1650'FEL,	Section 24,	T24S,	R36E
211 - Unit Letter K,	2310'FSL &	2310'FWL,	Section 24,	T24S,	R36E
220 - Unit Letter M,	660'FSL &	628'FWL,	Section 19,	T24S,	R37E

All pertinent data for each of the above proposed injection wells is included on the well schematic sheets in this application.

V. SUBJECT AREA MAPS

A map of the subject area, Cooper Jal Unit, including all wells within a 2 mile radius is attached. Also attached is a map showing each of the subject well's 1/2 mile radius circle or area of review.

VI. AREA OF REVIEW

The current Cooper Jal Unit waterflood was developed under NMOCD Order R-4019, Langlie Mattix Pool, and R-4020, Jalmat Pool, dated August 19, 1970. Since completion of the original hearing, three new wells were completed by Reserve Oil & Gas Company to the subject horizon within the Cooper Jal Unit subject area. The wells are Ccoper Jal Unit Numbers 151, 153, and 154.

The three wells mentioned above were all drilled within the subject area by Reserve Oil & Gas Company to complete several 80-acre, 5-spot patterns, which had not been completed. The intent of this application is to seek approval, either through a New Mexico Oil Conservation Division sponsored hearing or through NMOCD administrative approval, to modify the current 80-acre patterns to enhance the recovery of additional reserves from the Jalmat and Langlie Mattix Intervals. All pertinent well data for the area of review, not previously submitted, is attached to this application.

VI. AREA OF REVIEW (continued)

To date the following wells within the Cooper Jal Unit have been plugged and abandoned :

T-24-S, R-37-E

Section 18	: CJU	well(s)	: None
Section 19	: CJU	well(s)	: None
Section 30	: CJU	well(s)	: None

T-24-S, R-36-E

Section 13	: CJU	well(s)	: None
Section 23	: CJU	well(s)	: None
Section 24	: CJU	well(s)	: None
Section 25	: CJU	well(s)	: CJU No. 144
Section 26	: CJU	well(s)	: C. D. Woolworth # 5

The Cooper Jal Unit - Jalmat (Yates/U. Seven Rivers) and Langlie Mattix (L. Seven Rivers/Queen/U. Grayburg) Area, was created prior to the current format for authorization to inject. Therefore, a schematic of all wells of public record that penetrate the subject interval, within the Cooper Jal Unit, have been constructed. The unit wells, along with all wells that fall within each wells 1/2 mile radius of review, have been submitted in the appendix of this application.

VII. PROPOSED OPERATION

The proposed average injection rate per well is 400 BWIPD (800 BWIPD for downhole commingled injectors) with a maximum anticipated rate of 600 BWIPD (1200 BWIPD for DHC injectors). Maximum pressure will not exceed 1200 psi plant operating pressure. The average wellhead injection pressure will not exceed 800 psi until a step rate test establishes a higher limit. The system will be closed.

IX. PROPOSED STIMULATION PROGRAM

The subject wells will be stimulated using 2,000 to 8,000 gallons of 20% NEFE HCl acid. Rock salt blocks or ball sealers will be utilized during the jobs.

XII. GEOLOGICAL EVALUATION

Based on current geological and engineering data and a petrophysical rock-properties evaluation, there is no evidence of any natural or artificially created open faults within the unitized interval or above. There is no communication between the subject injection zone and any sub-surface source of drinking water.

LANGLIE-MATTIX POOL
(Cooper-Jal Unit Area)
Lea County, New Mexico

Order No. R-4019, Authorizing Reserve Oil and Gas Company to Institute a Waterflood Project in the Cooper-Jal Unit Area, Langlie-Mattix Pool, Lea County, New Mexico, August 25, 1970.

Application of Reserve Oil and Gas Company for a Waterflood Project, Lea County, New Mexico.

CASE NO. 4403
Order No. R-4019

ORDER OF THE COMMISSION

BY THE COMMISSION: This cause came on for hearing at 9:30 a.m. on August 19, 1970, at Santa Fe, New Mexico, before Examiner Daniel S. Nutter.

NOW, on this 25th day of August, 1970, the Commission, a quorum being present, having considered the testimony, the record, and the recommendations of the Examiner, and being fully advised in the premises,

FINDS:
(1) That due public notice having been given as required by law, the Commission has jurisdiction of this cause and the subject matter thereof.

(2) That the applicant, Reserve Oil and Gas Company, seeks authority to institute a waterflood project in the Cooper-Jal Unit Area, Langlie-Mattix Pool, by the injection of water into the Lower Seven Rivers and Queen formations through 26 injection wells in Township 24 South, Ranges 36 and 37 East, NMPM, Lea County, New Mexico.

(3) That the wells in the project area are in an advanced state of depletion and should properly be classified as "stripper" wells.

(4) That the proposed waterflood project should result in the recovery of otherwise unrecoverable oil, thereby preventing waste.

(5) That the subject application should be approved and the project should be governed by the provisions of Rules 701, 702, and 703 of the Commission Rules and Regulations.

IT IS THEREFORE ORDERED:
(1) That the applicant, Reserve Oil and Gas Company, is hereby authorized to institute a waterflood project in the Cooper-Jal Unit Area, Langlie-Mattix Pool, by the injection of water into the Lower Seven Rivers and Queen formations through the following-described 26 wells in Lea County, New Mexico:

Operator Lease	Well No.	Location Unit	Section	Township	Range
Amerada Falby	3	K	19	24S	37E
	(a dual completion)				
Cities Service Hansen-Jack	1	K	18	24S	37E
Jack "A" Federal	1	M	18	24S	37E
	(a dual completion)				
Continental Oil Company Jack Federal 19	1	E	19	24S	37E
	(a dual completion)				
	8	C	19	24S	37E
Harlan Bates	1	E	18	24S	37E
Humble E. Hunter	4	C	24	24S	36E
	(a dual completion)				
Petroleum Corporation of Texas M. Dunn	2	I	13	24S	36E
	(a dual completion)				
	4	O	13	24S	36E
Harrison	6	F	25	24S	36E
	8	D	25	24S	36E
Phillips	4	P	24	24S	36E
Thomas	6	J	24	24S	36E
	7	K	24	24S	36E
Reserve Oil and Gas Company Andrews	2	A	18	24S	37E
Hunter	3	M	13	24S	36E
	5	K	13	24S	36E
Gutman	1	G	18	24S	37E
	(a dual completion)				
Russell "A"	1	I	18	24S	37E
Van Zandt	5	B	25	24S	36E
	7	H	25	24S	36E
Atlantic Richfield Company Bates	1	C	18	24S	37E
Dunn SCP	5	H	24	24S	36E
	6	A	24	24S	36E
Texaco Fristoe "B"	5	D	30	24S	37E
Texas Pacific Bates	1	O	18	24S	37E

(2) That the subject waterflood project is hereby designated the Reserve Cooper Jal Langmat Waterflood Project and shall be governed by the provisions of Rules 701, 702, and 703 of the Commission Rules and Regulations.

(3) That monthly progress reports of the waterflood project herein authorized shall be submitted to the Commission in accordance with Rules 704 and 1120 of the Commission Rules and Regulations.

(4) That jurisdiction of this cause is retained for the entry of such further orders as the Commission may deem necessary.

DONE at Santa Fe, New Mexico, on the day and year hereinabove designated.

JALMAT POOL
(Cooper-Jal Unit Area)
Lea County, New Mexico

Order No. R-4020, Authorizing Reserve Oil and Gas Company to Institute a Waterflood Project in the Cooper-Jal Unit Area, Jalmat Pool, Lea County, New Mexico, August 25, 1970.

Application of Reserve Oil and Gas Company for a Waterflood Project, Lea County, New Mexico.

CASE NO. 4404
Order No. R-4020

ORDER OF THE COMMISSION

BY THE COMMISSION: This cause came on for hearing at 9:30 a.m. on August 19, 1970, at Santa Fe, New Mexico, before Examiner Daniel S. Nutter.

NOW, on this 25th day of August, 1970, the Commission, a quorum being present, having considered the testimony, the record, and the recommendations of the Examiner, and being fully advised in the premises,

FINDS:
(1) That due public notice having been given as required by law, the Commission has jurisdiction of this cause and the subject matter thereof.

(2) That the applicant, Reserve Oil and Gas Company, seeks authority to institute a waterflood project in the Cooper-Jal Unit Area, Jalmat Pool, by the injection of water into the Tansill, Yates, and Upper and Middle Seven Rivers formations through 23 injection wells in Township 24 South, Ranges 36 and 37 East, NMPM, Lea County, New Mexico.

(3) That the wells in the project area are in an advanced state of depletion and should properly be classified as "stripper" wells.

(4) That the proposed waterflood project should result in the recovery of otherwise unrecoverable oil, thereby preventing waste.

(5) That the subject application should be approved and the project should be governed by the provisions of Rules 701, 702, and 703 of the Commission Rules and Regulations.

IT IS THEREFORE ORDERED:
(1) That the applicant, Reserve Oil and Gas Company, is hereby authorized to institute a waterflood project in the Cooper-Jal Unit Area, Jalmat Pool, by the injection of water into the Tansill, Yates, and Upper and Middle Seven Rivers formations through the following-described 23 wells in Lea County, New Mexico:

Operator Lease	Well No.	Unit	Section	Township	Range
Amerada Falby	3	K	19	24S	37E
	(a dual completion)				
	4	M	19	24S	37E
Cities Service Jack "A" Federal	1	M	18	24S	37E
	(a dual completion)				
Continental Jack Federal 19	1	E	19	24S	37E
	(a dual completion)				
	4	C	19	24S	37E
Humble Hunter	3	E	24	24S	36E
	4	C	24	24S	36E
	(a dual completion)				
Thomas	1	O	23	24S	36E
	3	M	24	24S	36E
Petroleum Corporation of Texas M. Dunn	1	O	13	24S	36E
	2	I	13	24S	36E
Harrison	1	C	25	24S	36E
	7	E	25	24S	36E
Phillips	2	I	24	24S	36E
Thomas	1	O	24	24S	36E
	4	K	24	24S	36E
Reserve Oil and Gas Company Van Zandt	2	A	25	24S	36E
	4	G	25	24S	36E
Atlantic Richfield Company Dunn SCP	1	G	24	24S	36E
	3	A	24	24S	36E
Texaco Fristoe "B"	1	E	30	24S	37E
	3	C	30	24S	37E
Texas Pacific Myers "B" Federal	1	A	26	24S	36E

(2) That the subject waterflood project is hereby designated the Reserve Cooper Jal Jalmat Waterflood Project and shall be governed by the provisions of Rules 701, 702, and 703 of the Commission Rules and Regulations.

(3) That monthly progress reports of the waterflood project herein authorized shall be submitted to Commission in accordance with Rules 704 and 1120 of the Commission Rules and Regulations.

(4) That jurisdiction of this cause is retained for the entry of such further orders as the Commission may deem necessary.

DONE at Santa Fe, New Mexico, on the day and year hereinabove designated.

AFFIDAVIT OF PUBLICATION

State of New Mexico,
County of Lea.

I, Kathi Bearden

General Manager

of the Hobbs Daily News-Sun, a daily newspaper published at Hobbs, New Mexico, do solemnly swear that the clipping attached hereto was published once a week in the regular and entire issue of said paper, and not a supplement thereof for a period.

of

one weeks.

Beginning with the issue dated

June 29, 1993

and ending with the issue dated

June 29, 1993

Kathi Bearden
General Manager

Sworn and subscribed to before

me this 29 day of

June, 1993

Charlene Perrini
Notary Public.

My Commission expires
March 15, 1997
(Seal)

This newspaper is duly qualified to publish legal notices or advertisements within the meaning of Section 3, Chapter 167, Laws of 1937, and payment of fees for said publication has been made.

LEGAL NOTICE
June 29, 1993

Notice is hereby given of the application of Texaco Exploration & Production Inc., Attention: Terry L. Frazier, Area Manager, P.O. Box 730, Hobbs, New Mexico, 88240, Telephone (505)393-7191, to the New Mexico Oil Conservation Commission, Energy and Minerals Department, for approval of the following wells to be converted to water injection for the purpose of secondary oil recovery.

Lease/Unit Name: **Cooper Jal Unit**

Add Jalmat Completion and Down Hole Commingle Jalmat and Langlie Mattix Injection Intervals:

Well Numbers(s) and Location(s):

112 - Unit Letter M, 330'FSL & 990'FWL, Section 13, T24S, R36E

116 - Unit Letter M, 660'FSL & 660'FWL, Section 18, T24S, R37E

122 - Unit Letter A, 330'FNL & 990'FEL, Section 24, T24S, R36E

126 - Unit Letter G, 1650'FNL & 2310'FEL, Section 24, T24S, R36E

Add Langlie Mattix Completion and Down Hole Commingle Jalmat and Langlie Mattix Injection Intervals:

Well Number(s) and Location(s):

205 - Unit Letter H, 1980'FNL & 1650'FEL, Section 24, T24S, R36E

211 - Unit Letter K, 2310'FSL & 2310'FWL, Section 24, T24S, R36E

220 - Unit Letter M, 660'FSL & 628'FWL, Section 19, T24S, R37E

The injection formation is **Jalmat & Langlie Mattix** at a depth from **2950** feet to **3650** feet below the surface of the ground. Expected maximum injection rate is **1000** barrels per day and expected maximum injection pressure is **1200** pounds per square inch. Interested parties must file objections or requests for hearing with the Oil Conservation Division, P.O. Box 2088, Santa Fe, New Mexico,87501, within fifteen (15) days of this publication.

AFFIDAVIT OF PUBLICATION

State of New Mexico,
County of Lea.

I, Kathi Bearden

General Manager

of the Hobbs Daily News-Sun, a daily newspaper published at Hobbs, New Mexico, do solemnly swear that the clipping attached hereto was published once a week in the regular and entire issue of said paper, and not a supplement thereof for a period.

of

one weeks.

Beginning with the issue dated

June 29, 19 93

and ending with the issue dated

June 29, 19 93

Kathi Bearden
General Manager

Sworn and subscribed to before me this 29 day of June, 19 93.

Charlene Perrin
Notary Public.

My Commission expires
March 15, 1997
(Seal)

This newspaper is duly qualified to publish legal notices or advertisements within the meaning of Section 3, Chapter 167, Laws of 1937, and payment of fees for said publication has been made.

LEGAL NOTICE
June 29, 1993

Notice is hereby given of the application of Texaco Exploration & Production Inc., Attention: Terry L. Frazier, Area Manager, P.O. Box 730, Hobbs, New Mexico, 88240, Telephone (505)393-7191, to the New Mexico Oil Conservation Commission, Energy and Minerals Department, for approval of the following wells to be converted to water injection for the purpose of secondary oil recovery.

Lease/Unit Name: **Cooper Jal Unit**

Well Number(s) and Location(s):

132 - Unit Letter I, 2310'FSL & 990'FEL, Section 24, T24S, R36E

151 - Unit Letter A, 771'FNL & 170'FEL, Section 24, T24S, R36E

The injection formation is **Langlie Mattix** at a depth from **3250** feet to **3650** feet below the surface of the ground. Expected maximum injection rate is **500** barrels per day and expected maximum injection pressure is **1200** pounds per square inch. Interested parties must file objections or requests for hearing with the Oil Conservation Division, P.O. Box 2088, Santa Fe, New Mexico, 87501, within fifteen (15) days of this publication.

P 369 424 296

Receipt for Certified Mail
No Insurance Coverage Provided
Do not use for International Mail
(See Reverse)

UNITED STATES POSTAL SERVICE

Energy Development Corp.
1010 Louisiana, Suite 2900
Houston, TX 77002

Certified Fee	
Special Delivery Fee	
Restricted Delivery Fee	
Return Receipt Showing to Whom & Date Delivered	
Return Receipt Showing to Whom, Date, and Addressee's Address	
TOTAL Postage & Fees	$ 2.98
Postmark or Date	

PS Form 3800, June 1991

line over top of envelope to the
of the return address

P 369 424 295

Receipt for Certified Mail
No Insurance Coverage Provided
Do not use for International Mail
(See Reverse)

UNITED STATES POSTAL SERVICE

Chance Properties
P.O. Box 755
Hobbs, New Mexico 88240

Certified Fee	
Special Delivery Fee	
Restricted Delivery Fee	
Return Receipt Showing to Whom & Date Delivered	
Return Receipt Showing to Whom, Date, and Addressee's Address	
TOTAL Postage & Fees	$ 2.98
Postmark or Date	

PS Form 3800, June 1991

P 369 424 297

Receipt for Certified Mail
No Insurance Coverage Provided
Do not use for International Mail
(See Reverse)

UNITED STATES POSTAL SERVICE

Oryx Energy Company
P.O. Box 2880
Dallas, Texas 75221

Certified Fee	
Special Delivery Fee	
Restricted Delivery Fee	
Return Receipt Showing to Whom & Date Delivered	
Return Receipt Showing to Whom, Date, and Addressee's Address	
TOTAL Postage & Fees	$ 2.98
Postmark or Date	

PS Form 3800, June 1991

P 369 424 300

Receipt for Certified Mail
No Insurance Coverage Provided
Do not use for International Mail
(See Reverse)

UNITED STATES POSTAL SERVICE

Phillips Petroleum Co.
4001 Penbrook
Odessa, Texas 79762

Certified Fee	
Special Delivery Fee	
Restricted Delivery Fee	
Return Receipt Showing to Whom & Date Delivered	
Return Receipt Showing to Whom, Date, and Addressee's Address	
TOTAL Postage & Fees	$ 2.98
Postmark or Date	

PS Form 3800, June 1991

line over top of envelope to the
of the return address

P 369 424 299

Receipt for Certified Mail
No Insurance Coverage Provided
Do not use for International Mail
(See Reverse)

UNITED STATES POSTAL SERVICE

Doyle Hartman
P.O. Box 10426
Midland, Texas 79702

Certified Fee	
Special Delivery Fee	
Restricted Delivery Fee	
Return Receipt Showing to Whom & Date Delivered	
Return Receipt Showing to Whom, Date, and Addressee's Address	
TOTAL Postage & Fees	$ 2.98
Postmark or Date	

PS Form 3800, June 1991

line over top of envelope to the
of the return address

P 369 424 414

Receipt for Certified Mail
No Insurance Coverage Provided
Do not use for International Mail
(See Reverse)

UNITED STATES POSTAL SERVICE

Amoco Production Co.
P. O. Box 3092
Houston, Texas 77253

Certified Fee	
Special Delivery Fee	
Restricted Delivery Fee	
Return Receipt Showing to Whom & Date Delivered	
Return Receipt Showing to Whom, Date, and Addressee's Address	
TOTAL Postage & Fees	$ 2.98
Postmark or Date	

PS Form 3800, June 1991

P 369 424 282

Receipt for Certified Mail
No Insurance Coverage Provided
Do not use for International Mail
(See Reverse)

Tahoe Energy, Inc.
3909 W. Industrial
Midland, TX 79703

Certified Fee	
Special Delivery Fee	
Restricted Delivery Fee	
Return Receipt Showing to Whom & Date Delivered	
Return Receipt Showing to Whom, Date, and Addressee's Address	
TOTAL Postage & Fees	$2.98
Postmark or Date	JUN 29 1993 USPS

PS Form 3800, June 1991

P 369 424 285

Receipt for Certified Mail
No Insurance Coverage Provided
Do not use for International Mail
(See Reverse)

Burl H. Alexander
P.O. Box 913
Jal, N.M. 88252

Certified Fee	
Special Delivery Fee	
Restricted Delivery Fee	
Return Receipt Showing to Whom & Date Delivered	
Return Receipt Showing to Whom, Date, and Addressee's Address	
TOTAL Postage & Fees	$2.98
Postmark or Date	JUN 29 1993 USPS

PS Form 3800, June 1991

P 369 424 298

Receipt for Certified Mail
No Insurance Coverage Provided
Do not use for International Mail
(See Reverse)

IT Properties
3502 Yachtclub Court
Arlington, Texas 76016

Certified Fee	
Special Delivery Fee	
Restricted Delivery Fee	
Return Receipt Showing to Whom & Date Delivered	
Return Receipt Showing to Whom, Date, and Addressee's Address	
TOTAL Postage & Fees	$2.98
Postmark or Date	HOBBS NM 88240 JUN 29 1993

PS Form 3800, June 1991

P 369 424 303

Receipt for Certified Mail
No Insurance Coverage Provided
Do not use for International Mail
(See Reverse)

Exxon Company USA
P.O. Box 1600
Midland, Texas 79702

Certified Fee	
Special Delivery Fee	
Restricted Delivery Fee	
Return Receipt Showing to Whom & Date Delivered	
Return Receipt Showing to Whom, Date, and Addressee's Address	
TOTAL Postage & Fees	$2.98
Postmark or Date	JUN 29 1993 MIDLAND TX 79702

PS Form 3800, June 1991

P 369 424 302

Receipt for Certified Mail
No Insurance Coverage Provided
Do not use for International Mail
(See Reverse)

Tenison Oil Company
8140 Walnut Hill Lane
Suite 601
Dallas, Texas 75231

Certified Fee	
Special Delivery Fee	
Restricted Delivery Fee	
Return Receipt Showing to Whom & Date Delivered	
Return Receipt Showing to Whom, Date, and Addressee's Address	
TOTAL Postage & Fees	$2.98
Postmark or Date	JUN 29 1993 USPS

PS Form 3800, June 1991

P 369 424 301

Receipt for Certified Mail
No Insurance Coverage Provided
Do not use for International Mail
(See Reverse)

V.H. Westbrook
P.O. Box 2264
Hobbs, N.M. 88240

Certified Fee	
Special Delivery Fee	
Restricted Delivery Fee	
Return Receipt Showing to Whom & Date Delivered	
Return Receipt Showing to Whom, Date, and Addressee's Address	
TOTAL Postage & Fees	$2.98
Postmark or Date	HOBBS NM 88240 JUN 29 1993 USPS

PS Form 3800, June 1991

top of envelope to th
address

P 369 424 289

Receipt for Certified Mail

No Insurance Coverage Provided
Do not use for International Mail
(See Reverse)

Deep Wells Ranch, Inc.
Star Route
Combest Ranch
Jal, N.M. 88252

Certified Fee	
Special Delivery Fee	
Restricted Delivery Fee	
Return Receipt Showing to Whom & Date Delivered	
Return Receipt Showing to Whom, Date, and Addressee's Address	
TOTAL Postage & Fees	$2.98
Postmark or Date	JUN 29 1993 USPS

PS Form 3800, June 1991

Fold at line over top of envelope to the

P 369 424 290

Receipt for Certified Mail

No Insurance Coverage Provided
Do not use for International Mail
(See Reverse)

Santa Fe Exploration
P.O. Box 1136
Roswell, N.M. 88202

Certified Fee	
Special Delivery Fee	
Restricted Delivery Fee	
Return Receipt Showing to Whom & Date Delivered	
Return Receipt Showing to Whom, Date, and Addressee's Address	
TOTAL Postage & Fees	$2.98
Postmark or Date	

PS Form 3800, June 1991

P 369 424 291

Receipt for Certified Mail

No Insurance Coverage Provided
Do not use for International Mail
(See Reverse)

John H. Hendreix Corp.
223 W. Wall, Suite 525
Midland, TX 79701

Certified Fee	
Special Delivery Fee	
Restricted Delivery Fee	
Return Receipt Showing to Whom & Date Delivered	
Return Receipt Showing to Whom, Date, and Addressee's Address	
TOTAL Postage & Fees	$2.98
Postmark or Date	

PS Form 3800, June 1991

P 369 424 292

Receipt for Certified Mail

No Insurance Coverage Provided
Do not use for International Mail
(See Reverse)

Conoco Inc.
P.O. Box 1959
Midland, TX 79702

Certified Fee	
Special Delivery Fee	
Restricted Delivery Fee	
Return Receipt Showing to Whom & Date Delivered	
Return Receipt Showing to Whom, Date, and Addressee's Address	
TOTAL Postage & Fees	$2.98
Postmark or Date	JUN 29 1993

PS Form 3800, June 1991

P 369 424 293

Receipt for Certified Mail

No Insurance Coverage Provided
Do not use for International Mail
(See Reverse)

Chevron USA Inc.
P.O. Box 1150
Midland Texas 79702

Certified Fee	
Special Delivery Fee	
Restricted Delivery Fee	
Return Receipt Showing to Whom & Date Delivered	
Return Receipt Showing to Whom, Date, and Addressee's Address	
TOTAL Postage & Fees	$2.98
Postmark or Date	JUN 29 1993 USPS

PS Form 3800, June 1991

P 369 424 294

Receipt for Certified Mail

No Insurance Coverage Provided
Do not use for International Mail
(See Reverse)

OXY USA Inc.
P.O. Box 50250
Midland, Texas 79702

Certified Fee	
Special Delivery Fee	
Restricted Delivery Fee	
Return Receipt Showing to Whom & Date Delivered	
Return Receipt Showing to Whom, Date, and Addressee's Address	
TOTAL Postage & Fees	$2.98
Postmark or Date	JUN 29 1993 USPS

PS Form 3800, June 1991

Fold at line over top of envelope to the

P 369 424 287

Receipt for Certified Mail

No Insurance Coverage Provided
Do not use for International Mail
(See Reverse)

UNITED STATES POSTAL SERVICE

Triton Energy Corp.
6688 N. Central Exp.
Suite 1400
Dallas, TX 75206

Certified Fee	
Special Delivery Fee	
Restricted Delivery Fee	
Return Receipt Showing to Whom & Date Delivered	
Return Receipt Showing to Whom, Date, and Addressee's Address	
TOTAL Postage & Fees	$2.98
Postmark or Date	HOBBS NM 88240 JUN 29 1993 USPS

PS Form 3800, June 1991

P 369 424 281

Receipt for Certified Mail

No Insurance Coverage Provided
Do not use for International Mail
(See Reverse)

UNITED STATES POSTAL SERVICE

Christeen Pruett
Louis Q. Thomas
4501 N. Central Road
Bethany Oklahoma 73008

Certified Fee	1.00
Special Delivery Fee	
Restricted Delivery Fee	1
Return Receipt Showing to Whom & Date Delivered	
Return Receipt Showing to Whom, Date, and Addressee's Address	
TOTAL Postage & Fees	$2.98
Postmark or Date	HOBBS NM 88240 JUN 29 1993 USPS

PS Form 3800, June 1991

P 369 424 286

Receipt for Certified Mail

No Insurance Coverage Provided
Do not use for International Mail
(See Reverse)

UNITED STATES POSTAL SERVICE

Trustees
Jal Public Library
Fund
P.O. Box 178
Jal, N.M. 88252

Certified Fee	
Special Delivery Fee	
Restricted Delivery Fee	
Return Receipt Showing to Whom & Date Delivered	
Return Receipt Showing to Whom, Date, and Addressee's Address	
TOTAL Postage & Fees	$2.98
Postmark or Date	HOBBS NM 88240 JUN 29 1993 USPS

PS Form 3800, June 1991

P 369 424 305

Receipt for Certified Mail

No Insurance Coverage Provided
Do not use for International Mail
(See Reverse)

UNITED STATES POSTAL SERVICE

Lewis B. Burleson, Inc.
P.O. Box 2479
Midland, Texas 79702

Certified Fee	
Special Delivery Fee	
Restricted Delivery Fee	
Return Receipt Showing to Whom & Date Delivered	
Return Receipt Showing to Whom, Date, and Addressee's Address	
TOTAL Postage & Fees	$2.98
Postmark or Date	HOBBS NM 88240 JUN 29 1993 USPS

PS Form 3800, June 1991

P 369 424 304

Receipt for Certified Mail

No Insurance Coverage Provided
Do not use for International Mail
(See Reverse)

UNITED STATES POSTAL SERVICE

Sidney Lanier
P.O. Box 3284
Midland, Texas 79702

Certified Fee	
Special Delivery Fee	
Restricted Delivery Fee	
Return Receipt Showing to Whom & Date Delivered	
Return Receipt Showing to Whom, Date, and Addressee's Address	
TOTAL Postage & Fees	$2.98
Postmark or Date	HOBBS NM 88240 JUN 29 1993 USPS

PS Form 3800, June 1991

P 369 424 288

Receipt for Certified Mail

No Insurance Coverage Provided
Do not use for International Mail
(See Reverse)

UNITED STATES POSTAL SERVICE

Fred B. Cooper
RR#1, Box141
Blossom, TX 75416

Certified Fee	
Special Delivery Fee	
Restricted Delivery Fee	
Return Receipt Showing to Whom & Date Delivered	
Return Receipt Showing to Whom, Date, and Addressee's Address	
TOTAL Postage & Fees	$2.98
Postmark or Date	HOBBS NM 88240 JUN 29 1993 USPS

PS Form 3800, June 1991

P 369 424 307

Receipt for Certified Mail

No Insurance Coverage Provided

Do not use for International Mail (See Reverse)

UNITED STATES POSTAL SERVICE

Meridian Oil Inc.
P.O. Box 51810
Midland, Texas 79710

Certified Fee	
Special Delivery Fee	
Restricted Delivery Fee	
Return Receipt Showing to Whom & Date Delivered	
Return Receipt Showing to Whom, Date, and Addressee's Address	
TOTAL Postage & Fees	$2.98
Postmark or Date	HOBBS NM 88240 JUN 29 1993 USPS

PS Form 3800, June 1991

over top of envelope to the
the return address

P 369 424 306

Receipt for Certified Mail

No Insurance Coverage Provided

Do not use for International Mail (See Reverse)

UNITED STATES POSTAL SERVICE

Zia Energy, Inc.
P.O. Box 2219
Hobbs, N.M. 88240

Certified Fee	
Special Delivery Fee	
Restricted Delivery Fee	
Return Receipt Showing to Whom & Date Delivered	
Return Receipt Showing to Whom, Date, and Addressee's Address	
TOTAL Postage & Fees	$2.98
Postmark or Date	HOBBS NM 88240 JUN 29 1993 USPS

PS Form 3800, June 1991

to the

P 369 424 280

Receipt for Certified Mail

No Insurance Coverage Provided

Do not use for International Mail (See Reverse)

UNITED STATES POSTAL SERVICE

Ludean E. Cantrell, Trustee
Ludean E. Cantrell Living Trust
652 W. Beam Ave.
Yukon, Oklahoma 73099

Certified Fee	
Special Delivery Fee	
Restricted Delivery Fee	
Return Receipt Showing to Whom & Date Delivered	
Return Receipt Showing to Whom, Date, and Addressee's Address	
TOTAL Postage & Fees	$2.98
Postmark or Date	HOBBS NM 88240 JUN 29 1993 USPS

PS Form 3800, June 1991

er top of envelope to the
return address

P 369 424 308

Receipt for Certified Mail

No Insurance Coverage Provided

Do not use for International Mail (See Reverse)

UNITED STATES POSTAL SERVICE

Arco Oil & Gas Company
P.O. Box 1610
Midland, Texas 79702

Certified Fee	
Special Delivery Fee	
Restricted Delivery Fee	
Return Receipt Showing to Whom & Date Delivered	
Return Receipt Showing to Whom, Date, and Addressee's Address	
TOTAL Postage & Fees	$2.98
Postmark or Date	HOBBS NM 88240 JUN 29 1993 USPS

PS Form 3800, June 1991

APPENDIX

A. SCHEMATICS OF SUBJECT WELLS

B. MAPS OF SUBJECT AREA

C. TABULATION OF WELLS IN AREA OF REVIEW

- SCHEMATICS OF ALL WELLS IN AREA OF REVIEW

A. SCHEMATICS OF SUBJECT WELLS

III. WELL DATA
PROPOSED DOWN HOLE COMM.
INJECTOR (ADD JALMAT)

TEXACO E & P INC.
COOPER JAL UNIT NO. 112
API# 3002509557

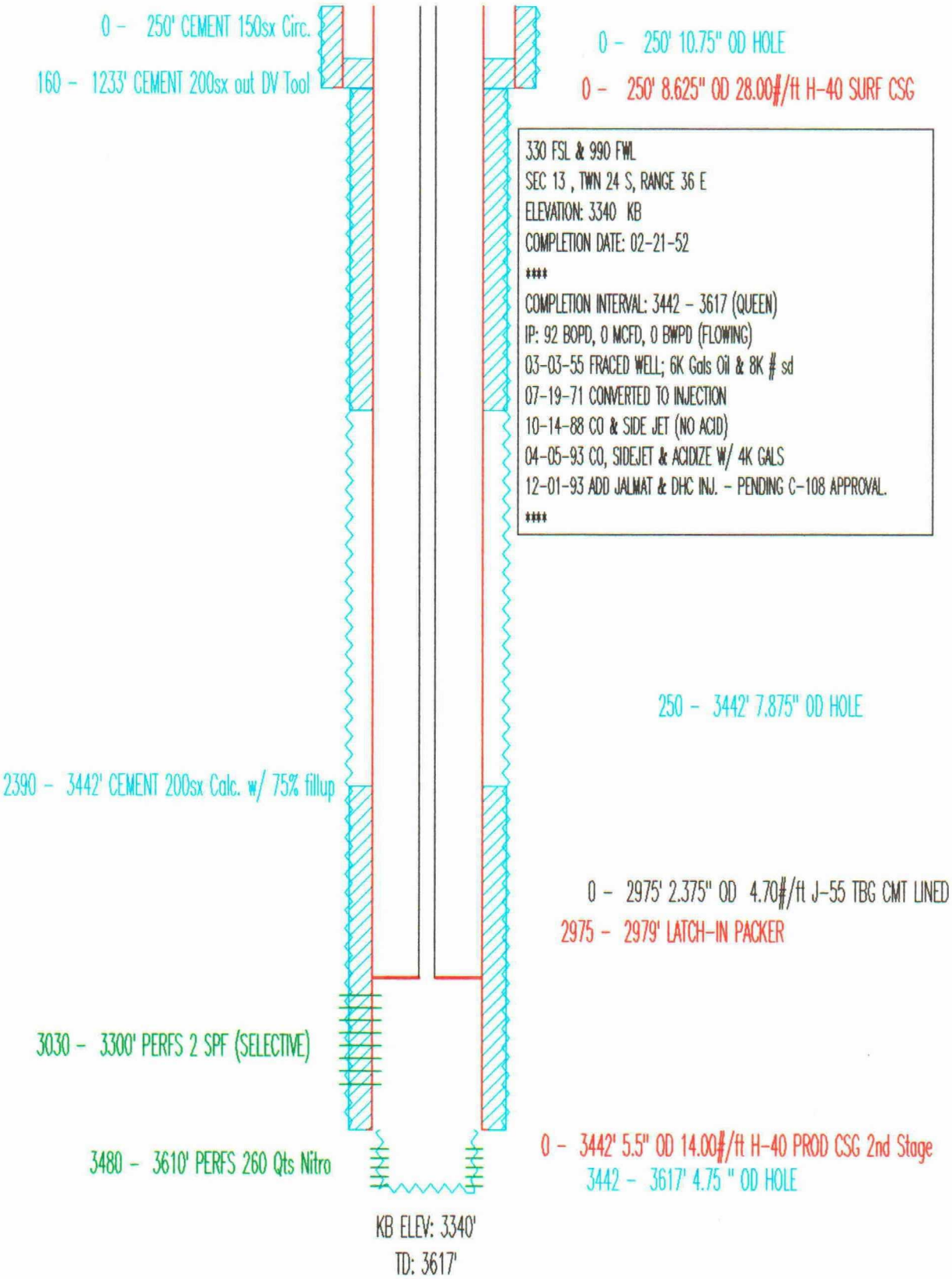

III. WELL DATA
PROPOSED CONVERSION
TO DOWN HOLE COMM. INJ.

TEXACO E & P INC.
COOPER JAL UNIT NO. 116/235
API# 3002511141

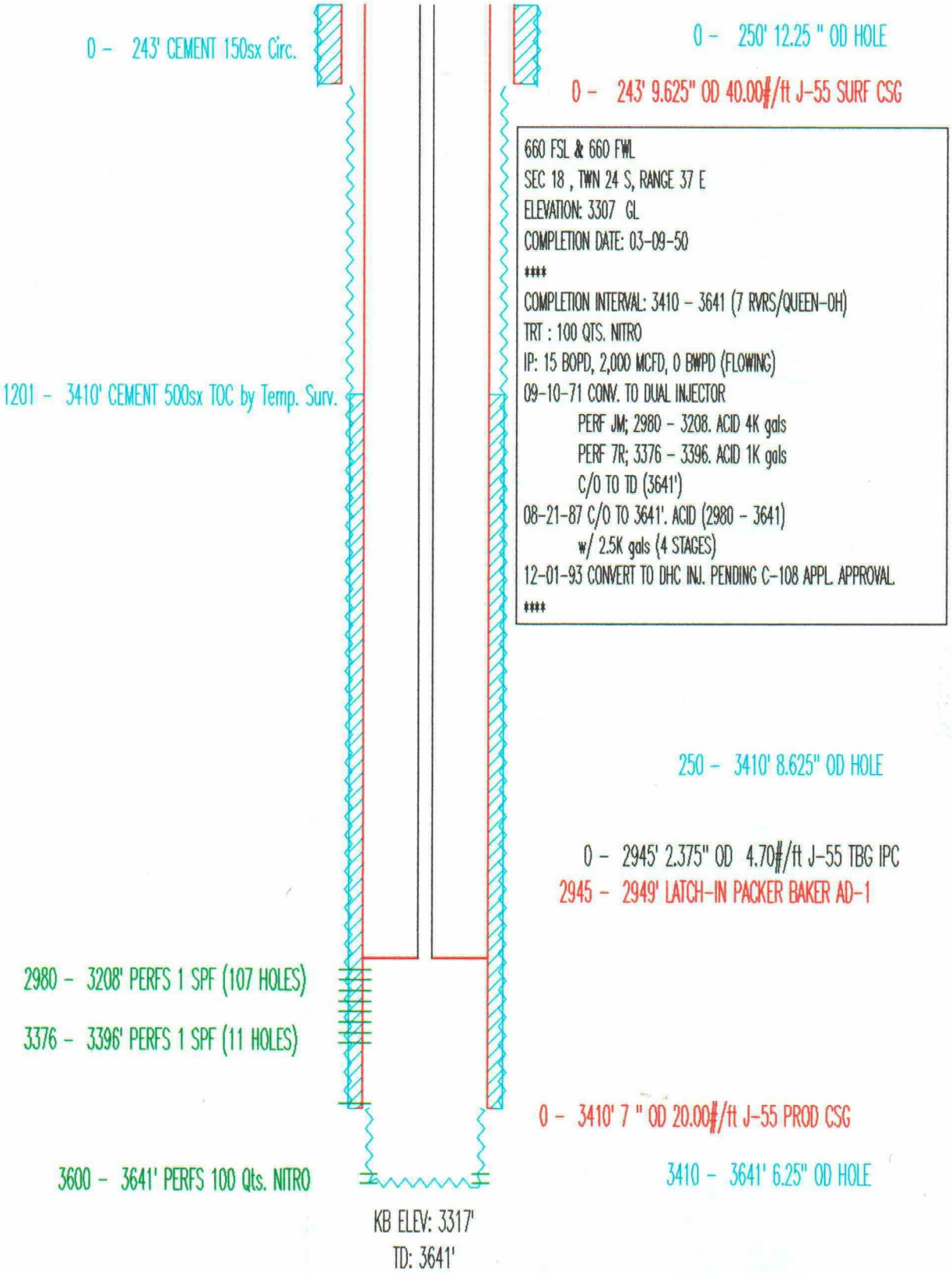

III. WELL DATA
PROPOSED DOWN HOLE COMM.
INJECTOR (ADD JALMAT)

TEXACO E & P INC.
COOPER JAL UNIT NO. 122
API# 3002509638

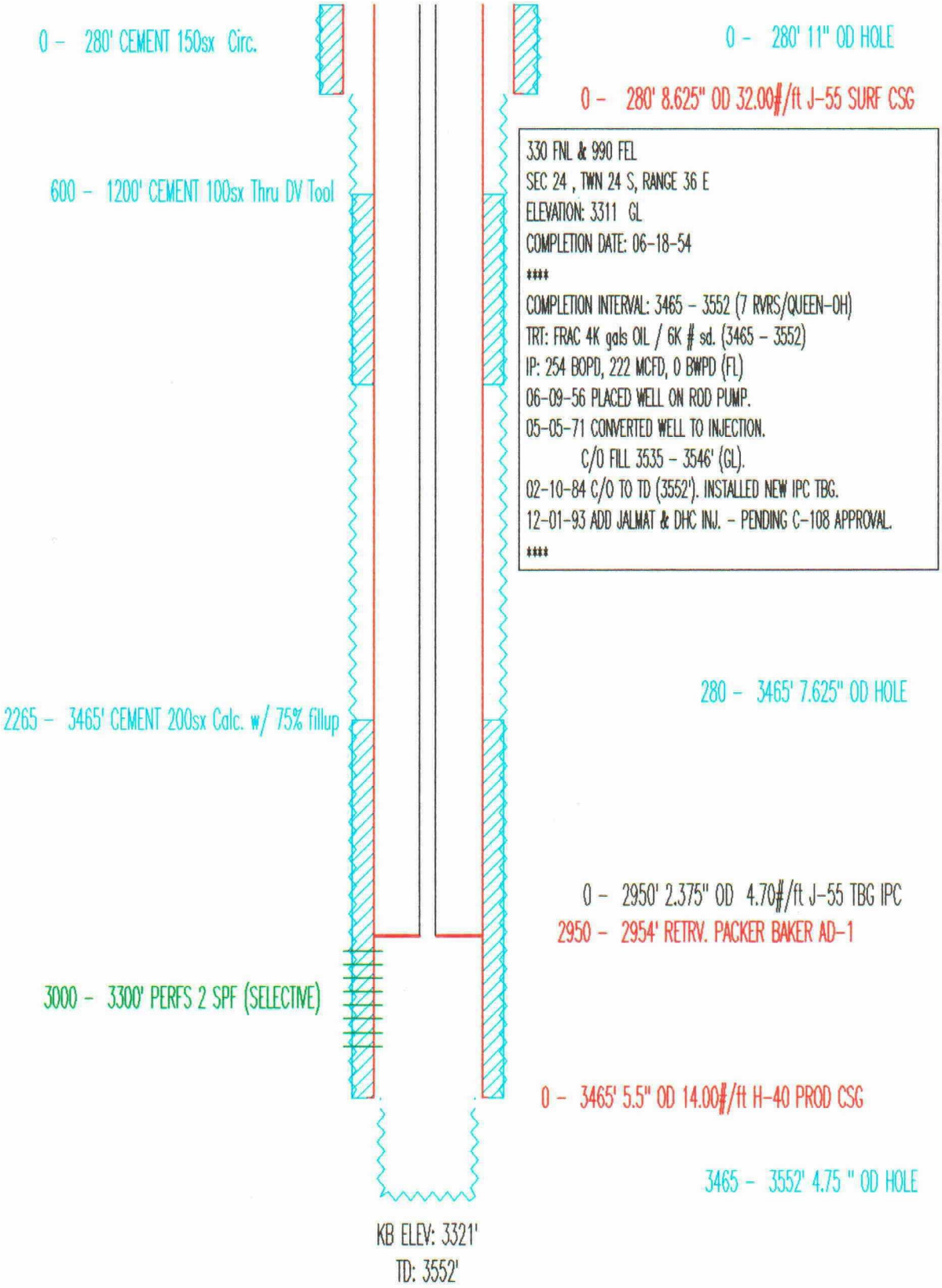

III. WELL DATA
PROPOSED DOWN HOLE
COMMINGLED INJECTOR

TEXACO E & P INC.
COOPER JAL UNIT NO. 126
API# 3002509636

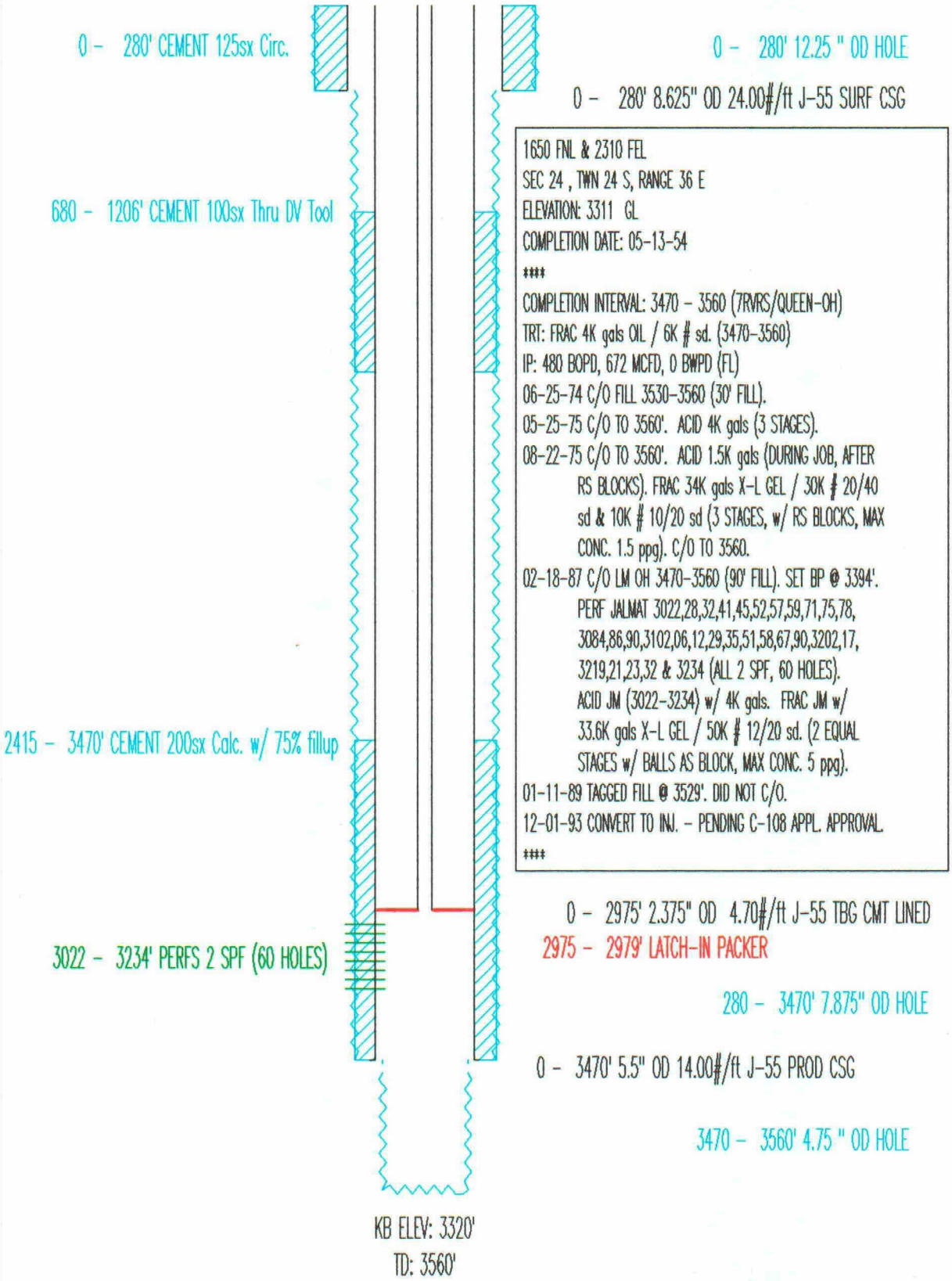

1650 FNL & 2310 FEL
SEC 24 , TWN 24 S, RANGE 36 E
ELEVATION: 3311 GL
COMPLETION DATE: 05-13-54
****
COMPLETION INTERVAL: 3470 - 3560 (7RVRS/QUEEN-OH)
TRT: FRAC 4K gals OIL / 6K # sd. (3470-3560)
IP: 480 BOPD, 672 MCFD, 0 BWPD (FL)
06-25-74 C/O FILL 3530-3560 (30' FILL).
05-25-75 C/O TO 3560'. ACID 4K gals (3 STAGES).
08-22-75 C/O TO 3560'. ACID 1.5K gals (DURING JOB, AFTER RS BLOCKS). FRAC 34K gals X-L GEL / 30K # 20/40 sd & 10K # 10/20 sd (3 STAGES, w/ RS BLOCKS, MAX CONC. 1.5 ppg). C/O TO 3560.
02-18-87 C/O LM OH 3470-3560 (90' FILL). SET BP @ 3394'. PERF JALMAT 3022,28,32,41,45,52,57,59,71,75,78, 3084,86,90,3102,06,12,29,35,51,58,67,90,3202,17, 3219,21,23,32 & 3234 (ALL 2 SPF, 60 HOLES). ACID JM (3022-3234) w/ 4K gals. FRAC JM w/ 33.6K gals X-L GEL / 50K # 12/20 sd. (2 EQUAL STAGES w/ BALLS AS BLOCK, MAX CONC. 5 ppg).
01-11-89 TAGGED FILL @ 3529'. DID NOT C/O.
12-01-93 CONVERT TO INJ. - PENDING C-108 APPL. APPROVAL.
****

III. WELL DATA
PROPOSED INJECTOR

TEXACO E & P INC.
COOPER JAL UNIT NO. 132
API# 3002509639

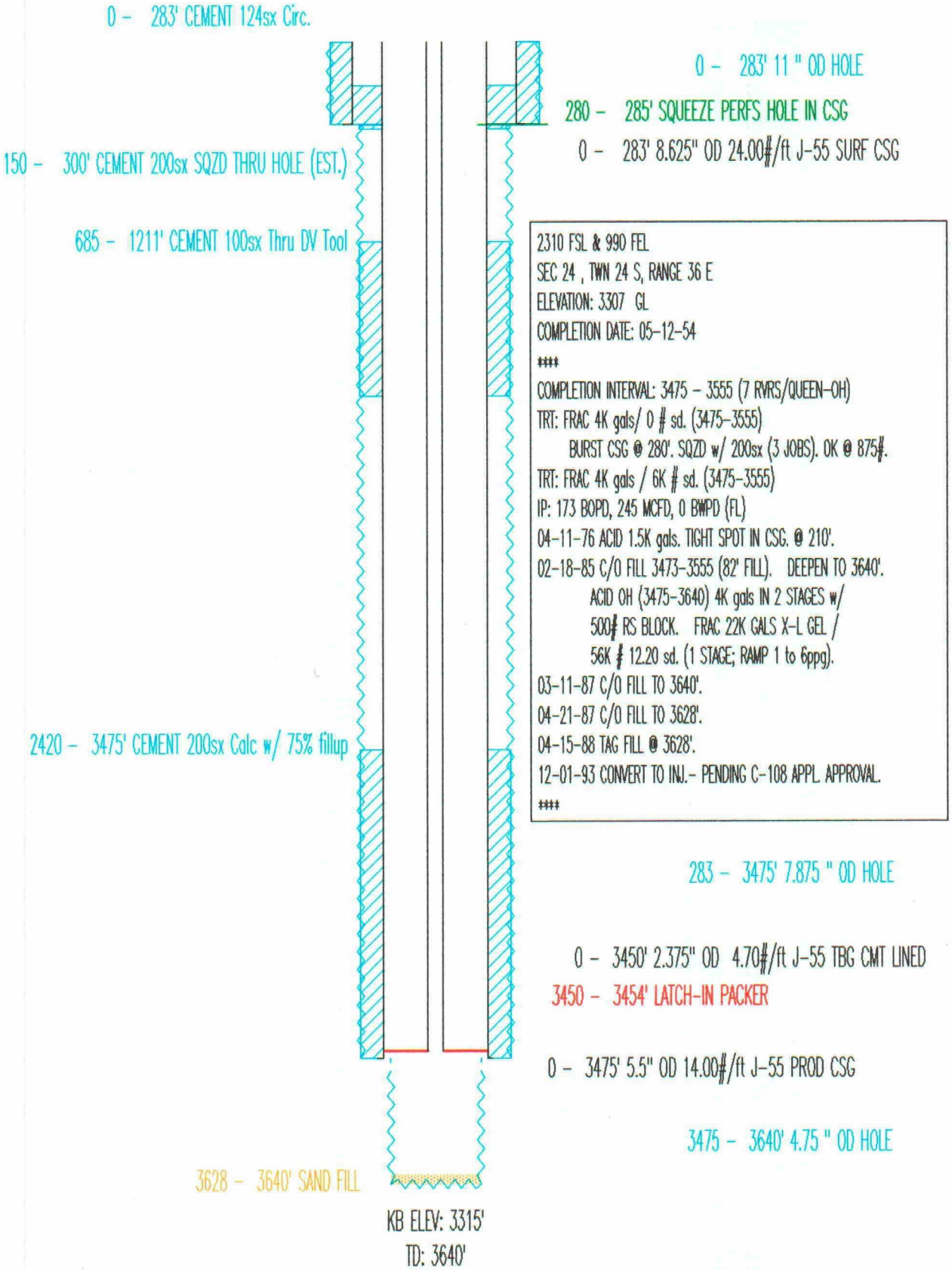

III. WELL DATA
PROPOSED INJECTOR

TEXACO E & P INC.
COOPER JAL UNIT NO. 151
API# 3002525682

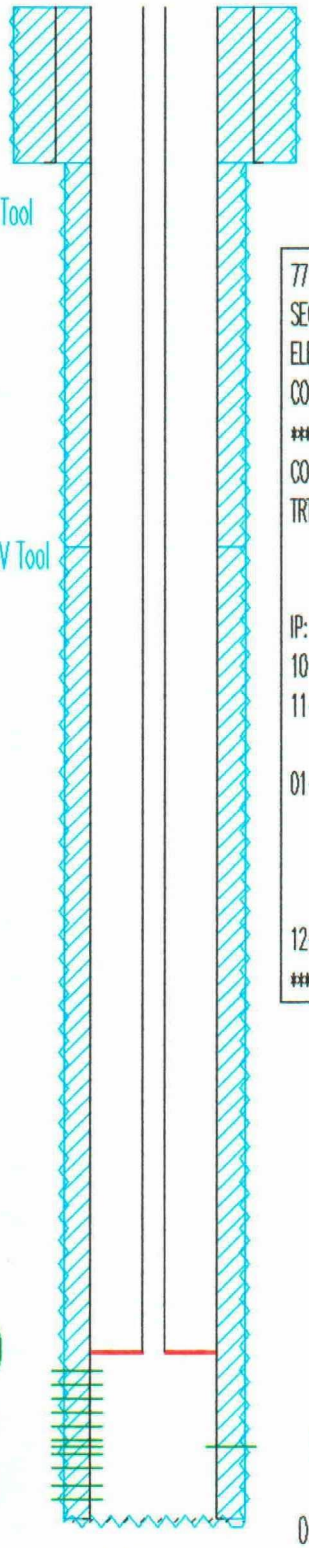

0 - 373' CEMENT 275sx Circ.

0 - 373' 12.25" OD HOLE

0 - 373' 8.625" OD 24.00#/ft K-55 SURF CSG

0 - 1300' CEMENT 215sx Circ. Thru DV Tool

771 FNL & 170 FEL
SEC 24 , TWN 24 S, RANGE 36 E
ELEVATION: 3303.5 GL
COMPLETION DATE: 11-18-77
****
COMPLETION INTERVAL: 3296 - 3608 (QUEEN)
TRT: ACID 6.5K gals (3296 - 3608)
FRAC 60K gals / 44K # 20/40 & 40K # 10/20 sd.
(2 EQ. STAGES w/ BALL BLOCKS - MAX CONC. 2 ppg)
IP: 66 BOPD, 56.8 MCFD, 116 BWPD (PMP)
10-16-79 ACID 1.5K gals & 2 DRUMS SCALE INHIBITOR.
11-10-87 TAGGED FILL @ 3608'. NO C/O.
ACID 2K gals.
01-30-93 TAGGED FILL @ 3603'. NO C/O.
PERFED LM 3460 - 3480 - 8 SPF (160-0.46" HOLES)
FRAC LM 35.65K gals / 78K # 12/20 BRADY.
(SCREENED OUT w/ 9 ppg ON FORMATION)
12-01-93 CONVERT TO INJECTION PENDING C-108 APPL.
****

1300 - 3656' CEMENT 525sx Circ. past DV Tool

373 - 3662' 7.875 " OD HOLE

0 - 3250' 2.875" OD 6.40#/ft J-55 TBG

3250 - 3254' LATCH-IN PACKER

3296 - 3530' PERFS 1 SPF (42 HOLES)

3572 - 3576' PERFS 1 SPF (5 HOLES)

3604 - 3608' PERFS 1 SPF (5 HOLES)

3460 - 3480' PERFS 8 SPF (160 HOLES)

0 - 3656' 5.5" OD 15.50#/ft J-55 PROD CSG

3656 - 3662' CEMENT PLUG

KB ELEV: 3316'
TD: 3662'

III. WELL DATA
PROPOSED DOWN HOLE COMM.
INJECTOR (ADD LM)

TEXACO E & P INC.
COOPER JAL UNIT NO. 205
API# 3002509620

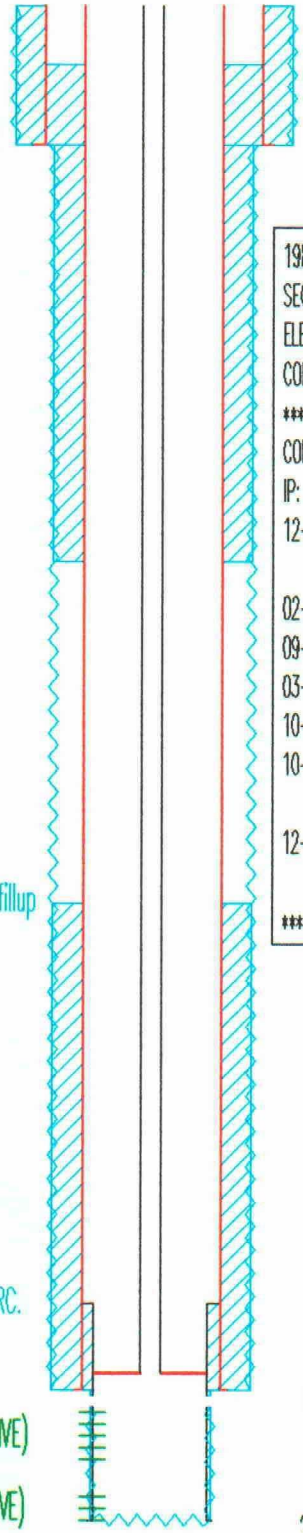

0 - 300' CEMENT 125sx Circ.

125 - 1198' CEMENT 200sx Thru DV Tool

1935 - 2988' CEMENT 200sx Calc w/ 75% fillup

2800 - 3650' CEMENT CIRC.

3000 - 3300' PERFS 2 SPF (SELECTIVE)

3450 - 3650' PERFS 2 SPF (SELECTIVE)

KB ELEV: 3319'
TD: 3650'

0 - 300' 11 " OD HOLE

0 - 300' 8.625" OD 28.00#/ft J-55 SURF CSG

1980 FNL & 1650 FEL
SEC 24 , TWN 24 S, RANGE 36 E
ELEVATION: 3308 GL
COMPLETION DATE: 05-06-50
****
COMPLETION INTERVAL: 2988 - 3251 (YATES-OH)
IP: 48 BOPD, 61 MCFD, 0 BWPD (FL)
12-04-54 C/O FILL 3054-3251' (197'). FRAC OH w/ 12K gals OIL / 16K # sd.
02-14-61 PLACED WELL ON ROD PUMP.
09-21-71 CONVERTED TO INJECTION. C/O FILL TO 3251'.
03-16-78 RAN INJ. SURVEY. TAGGED FILL @ 3177' (74' FILL).
10-07-84 TAGGED FILL @ 3063' (188' FILL).
10-15-86 C/O FILL 3058-3251 (193'). JETWASH OH. ACID OH 4K gals (2 STAGES). INSTALLED NEW TBG.
12-01-93 DEEPEN TO LANGLIE MATTIX. SET LINER, PERF & DHC INJECTION - PENDING C-108 APPL. APPROVAL.
****

300 - 2988' 7.875 " OD HOLE

0 - 2950' 2.375" OD 4.70#/ft J-55 TBG CMT LINED

2950 - 2954' RETRV. PACKER BAKER AD-1

0 - 2988' 5.5" OD 14.00#/ft J-55 PROD CSG

2988 - 3650' 4.75 " OD HOLE

2800 - 3650' 4.5" OD 11.60#/ft J-55,FL4S LINER

III. WELL DATA
PROPOSED DOWN HOLE COMM.
INJECTOR (ADD LM)

TEXACO E & P INC.
COOPER JAL UNIT NO. 211
API# 3002509787

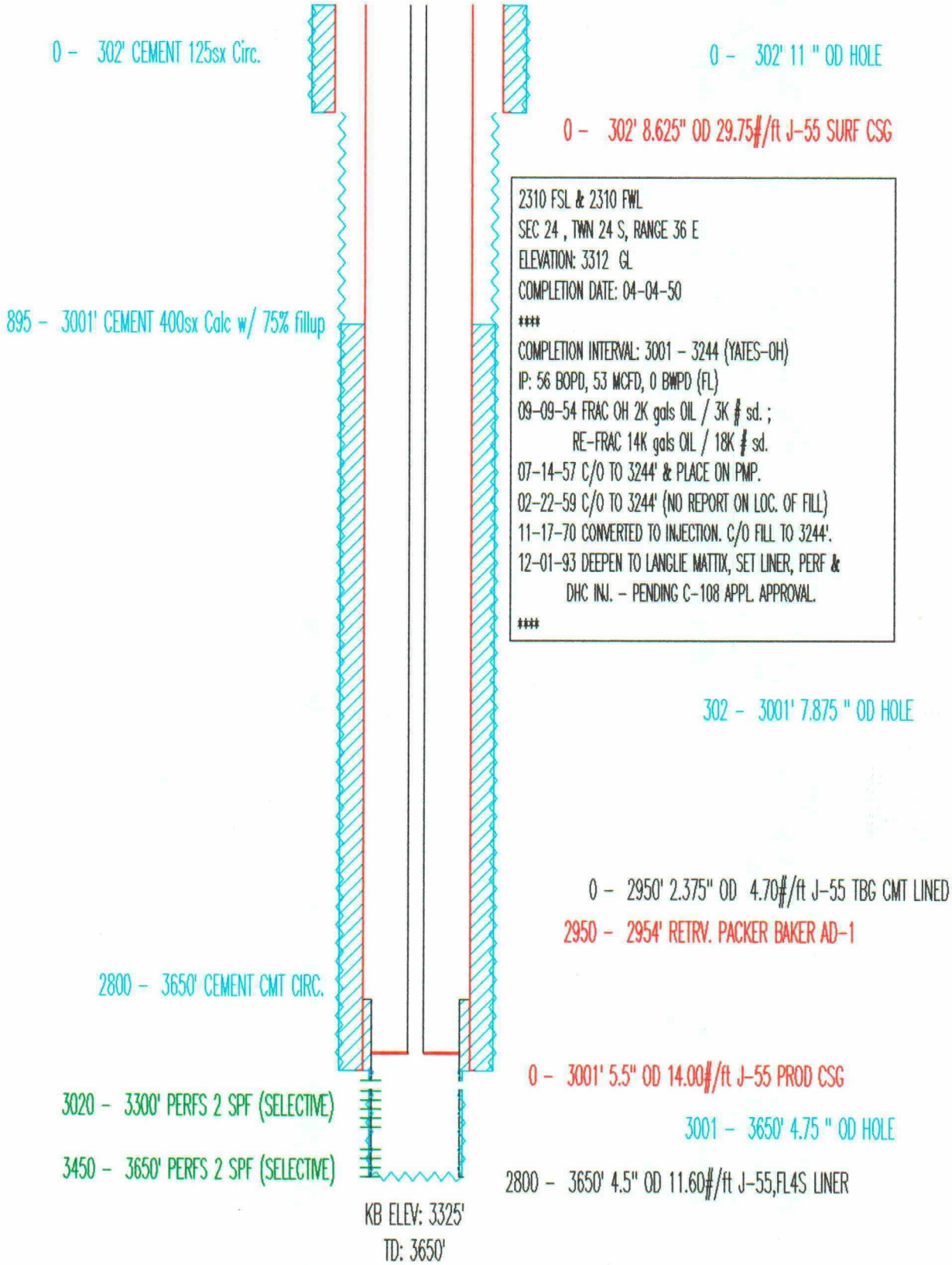

III. WELL DATA
PROPOSED DOWN HOLE COMM.
INJECTOR (ADD LM)

TEXACO E & P INC.
COOPER JAL UNIT NO. 220
API# 3002511162

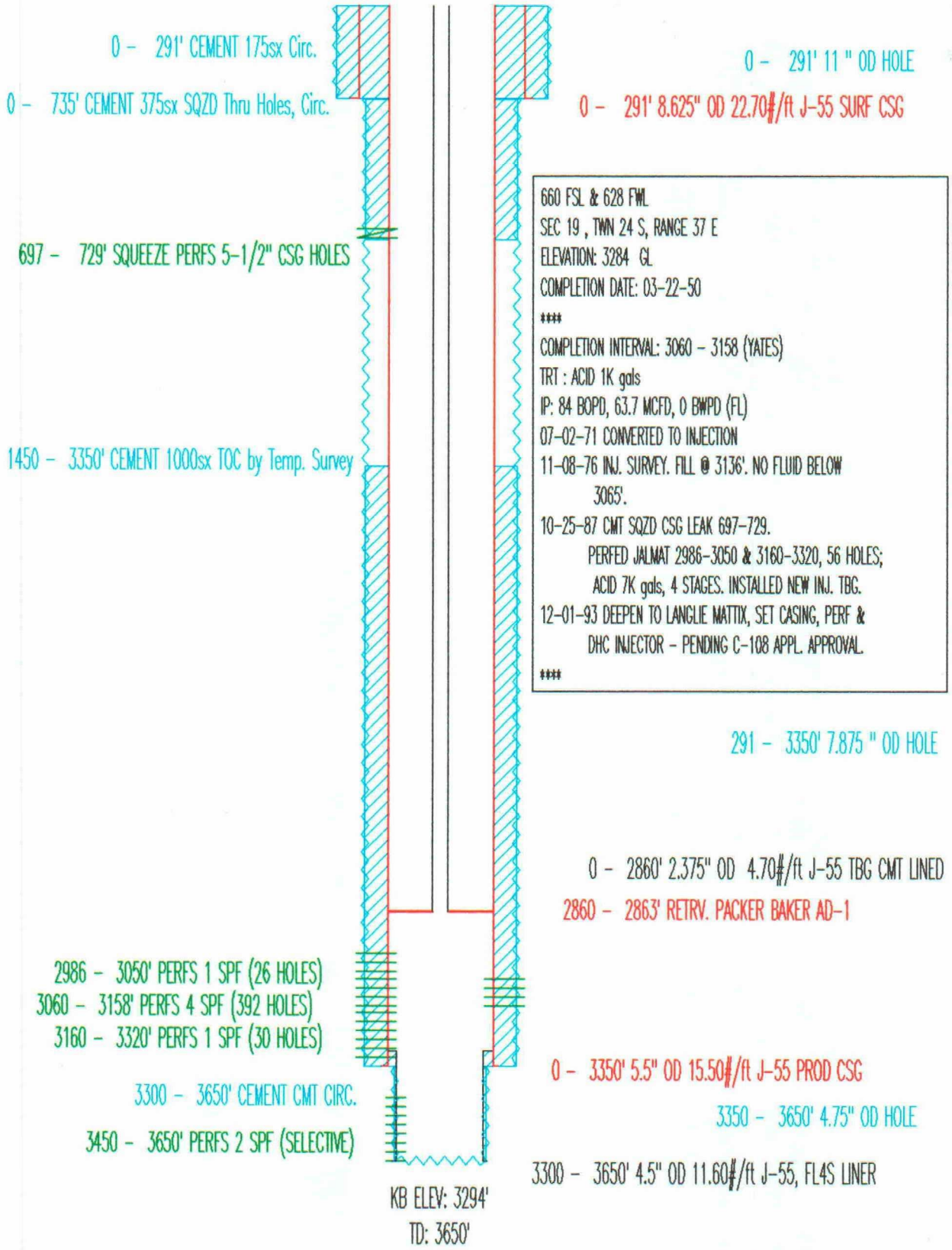

B. MAPS OF SUBJECT AREA

COOPER JAL UNIT

JALMAT & LANGLIE MATTIX FIELDS

V. Cooper Jal Unit Area

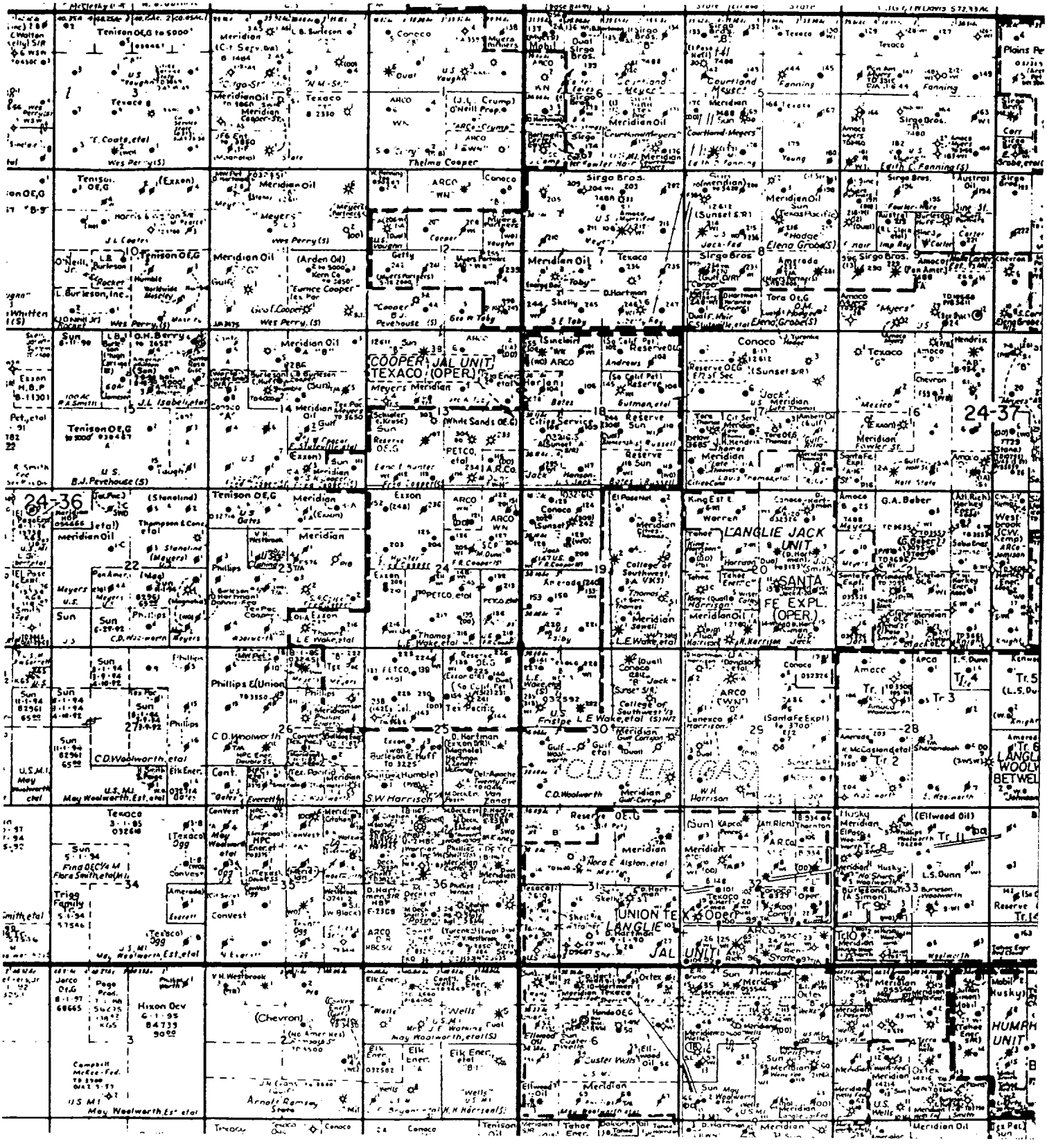

SCALE : 1" = 4400'

COOPER JAL UNIT
JALMAT & LANGLIE MATTIX POOLS
LEA COUNTY , NEW MEXICO

V. COOPER JAL UNIT - AREA OF REVIEW

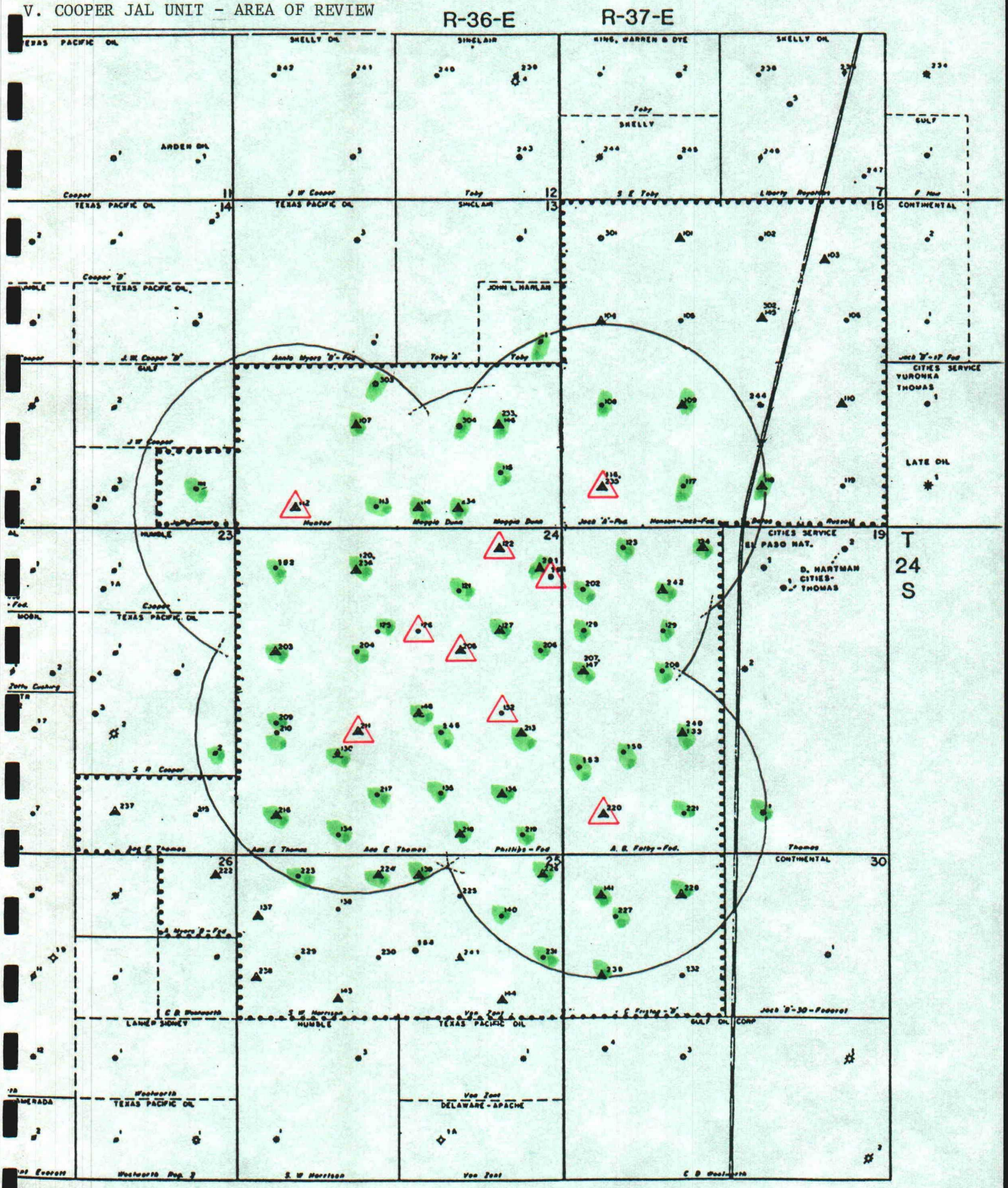

SCALE : 1" = 1950'

C. TABULATION OF WELLS IN AREA OF REVIEW

– SCHEMATICS OF WELLS

COOPER JAL UNIT - WELL DATA

WELL NAME	WELL NO.	STATUS	ZONE	TOWNSHIP	RANGE	SECTION	UNIT LETTER	TD
Toby	1	PRODUCER	LMJM	T - 24 - S	R - 36 - E	13	H	3615'
Thomas 'A'	4	PRODUCER	LM	T - 24 - S	R - 37 - E	19	O	3691'
S. R. Cooper	2	PRODUCER	LM	T - 24 - S	R - 36 - E	23	I	3179'
CJU	101	INJECTOR	LM	T - 24 - S	R - 37 - E	18	C	3572'
CJU	102	PRODUCER	LM	T - 24 - S	R - 37 - E	18	B	3580'
CJU	103	INJECTOR	LM	T - 24 - S	R - 37 - E	18	A	3589'
CJU	104	INJECTOR	LM	T - 24 - S	R - 37 - E	18	E	3655'
CJU	105	PRODUCER	LM	T - 24 - S	R - 37 - E	18	F	3733'
CJU	106	PRODUCER	LM	T - 24 - S	R - 37 - E	18	H	3587'
CJU	107	INJECTOR	LM	T - 24 - S	R - 36 - E	13	K	3611'
CJU	108	PRODUCER	LMJM	T - 24 - S	R - 37 - E	18	L	3640'
CJU	109	INJECTOR	LM	T - 24 - S	R - 37 - E	18	K	3638'
CJU	110	INJECTOR	LM	T - 24 - S	R - 37 - E	18	I	3587'
CJU	111	PRODUCER	LM	T - 24 - S	R - 36 - E	14	P	3595'
CJU	112	INJECTOR	LM	T - 24 - S	R - 36 - E	13	M	3617'
CJU	113	PRODUCER	LM	T - 24 - S	R - 36 - E	13	N	3615'
CJU	114	INJECTOR	LM	T - 24 - S	R - 36 - E	13	O	3540'
CJU	115	PRODUCER	LMJM	T - 24 - S	R - 36 - E	13	P	3668'
CJU	116/235	INJECTOR	LMJM	T - 24 - S	R - 37 - E	18	M	3641'
CJU	117	PRODUCER	JM	T - 24 - S	R - 37 - E	18	N	3648'
CJU	118	INJECTOR	LM	T - 24 - S	R - 37 - E	18	O	3628'
CJU	119	PRODUCER	LM	T - 24 - S	R - 37 - E	18	P	3597'
CJU	120/236	INJECTOR	LMJM	T - 24 - S	R - 36 - E	24	C	3604'
CJU	121	PRODUCER	LMJM	T - 24 - S	R - 36 - E	24	B	3560'
CJU	122	INJECTOR	LM	T - 24 - S	R - 36 - E	24	A	3552'
CJU	123	PRODUCER	LMJM	T - 24 - S	R - 37 - E	19	D	3650'
CJU	124	INJECTOR	LM	T - 24 - S	R - 37 - E	19	C	3530'
CJU	125	PRODUCER	LMJM	T - 24 - S	R - 36 - E	24	F	3655'
CJU	126	PRODUCER	LMJM	T - 24 - S	R - 36 - E	24	G	3560'
CJU	127	INJECTOR	LM	T - 24 - S	R - 36 - E	24	H	3541'
CJU	128	PRODUCER	LMJM	T - 24 - S	R - 37 - E	19	E	3675'
CJU	129	PRODUCER	LMJM	T - 24 - S	R - 37 - E	19	F	3670'
CJU	130	INJECTOR	LM	T - 24 - S	R - 36 - E	24	K	3550'
CJU	132	PRODUCER	LM	T - 24 - S	R - 36 - E	24	I	3640'
CJU	133/240	INJECTOR	LMJM	T - 24 - S	R - 37 - E	19	K	3680'
CJU	134	PRODUCER	LMJM	T - 24 - S	R - 36 - E	24	N	3570'
CJU	135	PRODUCER	LMJM	T - 24 - S	R - 36 - E	24	O	3650'
CJU	136	INJECTOR	LM	T - 24 - S	R - 36 - E	24	P	3540'
CJU	137	SI PRODUCER	LM	T - 24 - S	R - 36 - E	25	D	3560'
CJU	138	PRODUCER	LMJM	T - 24 - S	R - 36 - E	25	C	3635'
CJU	139	INJECTOR	LM	T - 24 - S	R - 36 - E	25	B	3545'
CJU	140	PRODUCER	LMJM	T - 24 - S	R - 36 - E	25	A	3615'
CJU	141	INJECTOR	LM	T - 24 - S	R - 37 - E	30	D	3535'
CJU	143	INJECTOR	LM	T - 24 - S	R - 36 - E	25	F	3550'
CJU	144	PA	NONE	T - 24 - S	R - 36 - E	25	H	3490'
CJU	145/302	INJECTOR	LM	T - 24 - S	R - 37 - E	18	G	3591'
CJU	146/233	INJECTOR	LMJM	T - 24 - S	R - 36 - E	13	I	3642'
CJU	147/207	INJECTOR	LMJM	T - 24 - S	R - 37 - E	19	E	3576'
CJU	148	INJECTOR	LM	T - 24 - S	R - 36 - E	24	J	3550'
CJU	150	PRODUCER	LMJM	T - 24 - S	R - 37 - E	19	L	3824'
CJU	151	PRODUCER	LM	T - 24 - S	R - 36 - E	24	A	3662'
CJU	152	PRODUCER	LMJM	T - 24 - S	R - 36 - E	24	D	3757'
CJU	153	PRODUCER	LMJM	T - 24 - S	R - 37 - E	19	L	3711'
CJU	154	PRODUCER	LM	T - 24 - S	R - 36 - E	25	G	3655'
CJU	155/301	PRODUCER	LM	T - 24 - S	R - 37 - E	18	D	3720'
CJU	201	INJECTOR	JM	T - 24 - S	R - 36 - E	24	A	3237'
CJU	202	PRODUCER	JM	T - 24 - S	R - 37 - E	19	D	3224'
CJU	203	INJECTOR	JM	T - 24 - S	R - 36 - E	24	E	3195'
CJU	204	PRODUCER	JM	T - 24 - S	R - 36 - E	24	F	3188'

COOPER JAL UNIT - WELL DATA

WELL NAME	WELL NO.	STATUS	ZONE	TOWNSHIP	RANGE	SECTION	UNIT LETTER	TD
CJU	205	INJECTOR	JM	T - 24 - S	R - 36 - E	24	G	3251'
CJU	206	PRODUCER	JM	T - 24 - S	R - 36 - E	24	H	3230'
CJU	208	PRODUCER	JM	T - 24 - S	R - 37 - E	19	F	3169'
CJU	209	PRODUCER	LMJM	T - 24 - S	R - 36 - E	24	L	3681'
CJU	210	PRODUCER	JM	T - 24 - S	R - 36 - E	24	L	3191'
CJU	211	INJECTOR	JM	T - 24 - S	R - 36 - E	24	K	3244'
CJU	213	INJECTOR	JM	T - 24 - S	R - 36 - E	24	I	3220'
CJU	215	PRODUCER	JM	T - 24 - S	R - 36 - E	23	P	3193'
CJU	216	INJECTOR	JM	T - 24 - S	R - 36 - E	24	M	3210'
CJU	217	PRODUCER	JM	T - 24 - S	R - 36 - E	24	N	3244'
CJU	218	INJECTOR	JM	T - 24 - S	R - 36 - E	24	O	3250'
CJU	219	PRODUCER	JM	T - 24 - S	R - 36 - E	24	P	3208'
CJU	220	INJECTOR	JM	T - 24 - S	R - 37 - E	19	M	3350'
CJU	221	PRODUCER	LMJM	T - 24 - S	R - 37 - E	19	N	3770'
CJU	222	INJECTOR	JM	T - 24 - S	R - 36 - E	26	A	3193'
CJU	223	PRODUCER	JM	T - 24 - S	R - 36 - E	25	D	3188'
CJU	224	INJECTOR	JM	T - 24 - S	R - 36 - E	25	C	3230'
CJU	225	PRODUCER	JM	T - 24 - S	R - 36 - E	25	B	3318'
CJU	226	INJECTOR	JM	T - 24 - S	R - 36 - E	25	A	3223'
CJU	227	PRODUCER	JM	T - 24 - S	R - 37 - E	30	D	3148'
CJU	228	INJECTOR	JM	T - 24 - S	R - 37 - E	30	C	3134'
CJU	229	PRODUCER	JM	T - 24 - S	R - 36 - E	25	E	3700'
CJU	230	PRODUCER	JM	T - 24 - S	R - 36 - E	25	F	3226'
CJU	231	PRODUCER	JM	T - 24 - S	R - 36 - E	25	H	3192'
CJU	232	PRODUCER	JM	T - 24 - S	R - 37 - E	30	F	3130'
CJU	234	INJECTOR	JM	T - 24 - S	R - 36 - E	13	O	3228'
CJU	237	SI PRODUCER	JM	T - 24 - S	R - 36 - E	23	O	3602'
CJU	238	INJECTOR	JM	T - 24 - S	R - 36 - E	25	E	3589'
CJU	239	INJECTOR	JM	T - 24 - S	R - 37 - E	30	E	3180'
CJU	241	INJECTOR	JM	T - 24 - S	R - 36 - E	25	G	3580'
CJU	242	INJECTOR	JM	T - 24 - S	R - 37 - E	19	C	3191'
CJU	244	PRODUCER	LMJM	T - 24 - S	R - 37 - E	18	J	3601'
CJU	245	PRODUCER	JM	T - 24 - S	R - 36 - E	24	J	3560'
CJU	303	GAS	JM	T - 24 - S	R - 36 - E	13	K	3165'
CJU	304	SI GAS	JM	T - 24 - S	R - 36 - E	13	J	3211'
C.D. Woolworth	5	P & A	JMLM	T - 24 - S	R - 36 - E	26	A	3504'

ZIA ENERGY, INC.
TOBY NO.1
API# 3002509563

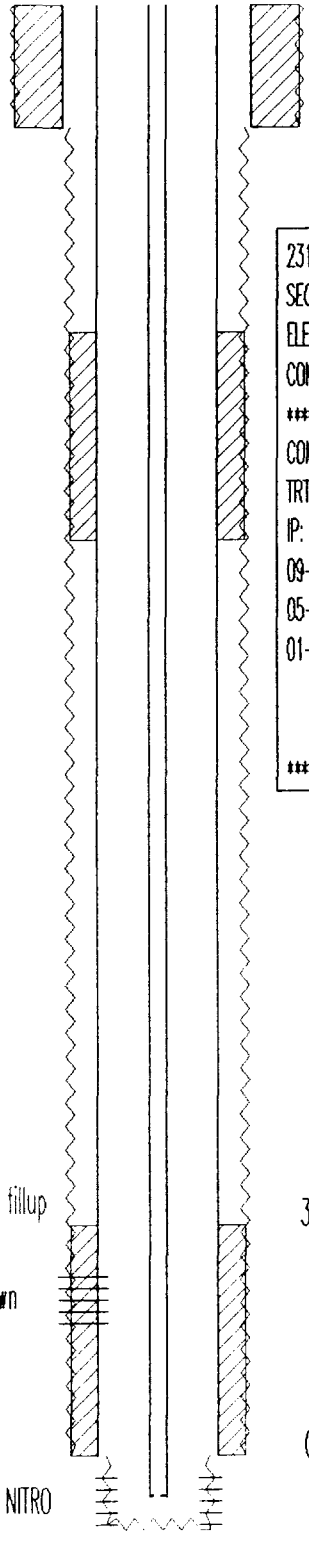

0 - 289' CEMENT 100sx Circ.

0 - 289' 13" OD HOLE

0 - 289' 8.625" OD 28.00#/ft J-55 SURF CSG

2310 FNL & 330 FEL
SEC 13 , TWN 24 S, RANGE 33 E
ELEVATION: 3180 GL
COMPLETION DATE: 09-21-50
****
COMPLETION INTERVAL: 3450 - 3615 (QUEEN-OH)
TRT: 312 QTS. NITRO
IP: 15 BOPD, 0 MCFD, 0 BWPD (FLOWING)
09-15-76 C/O, FRAC 40K GALS / 60K #
05-26-83 C/O, 4K GALS ACID, FRAC 45K GALS 80K #
01-27-89 OPEN JALMAT 2995 - 3134 (30 HOLES)
IP : 6 OIL, 15 WTR, 99 MCF
DHC w/ LM.
****

775 - 1270' CEMENT 100sx thru DV tool

289 - 3450' 8" OD HOLE

0 - 3550' 2.375" OD 4.70#/ft J-55 TBG

2900 - 3450' CEMENT 100sx Calc. w/ 75% fillup

3544 - 3546' SEATING NIPPLE

2995 - 3134' PERFS 30 HOLESwn

0 - 3450' 5.5" OD 14.00#/ft J-55 PROD CSG

3490 - 3615' PERFS 312 Qts NITRO

3450 - 3615' 4.75" OD HOLE

KB ELEV: 3011'
TD: 3615'

OXY USA INC.
THOMAS 'A' NO. 4
API# 3002528464

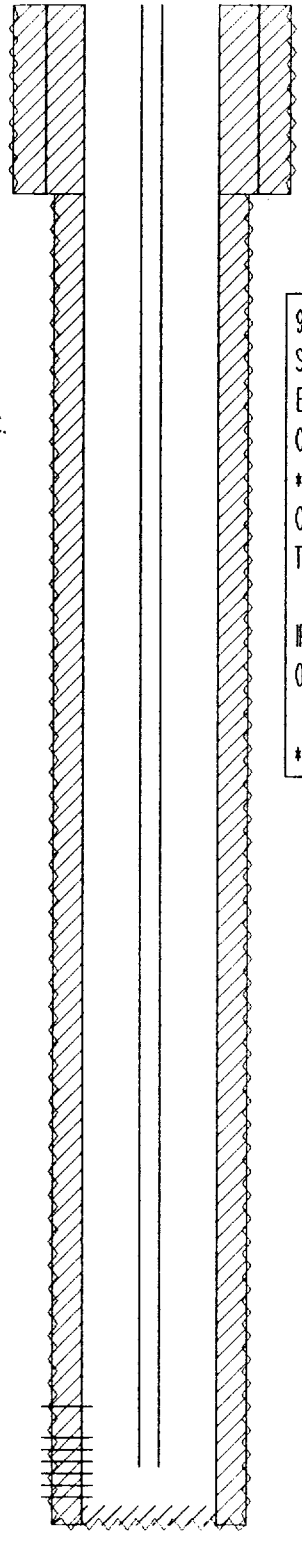

0 - 457' CEMENT 285sx Circ.

0 - 457' 11.25" OD HOLE

0 - 457' 8.625" OD 32.00#/ft J-55 SURF CSG

990 FSL & 1880 FEL
SEC 19 , TWN 24 S, RANGE 37 E
ELEVATION: 3274 GL
COMPLETION DATE: 01-13-84
****
COMPLETION INTERVAL: 3463 - 3624 (7 RIVERS)
TRT : ACID 2500 gals
FRAC 39K GALS / 48K # SD.
IP: 146 BOPD, 282 MCFD, 5 BWPD (FL)
09-24-91 PERF 3401 - 3406 (U. 7 RIVERS)
ACID 2K GALS; FRAC 29K GALS / 50K # SD.
****

0 - 3691' CEMENT 860sx Circ.

457 - 3691' 7.875" OD HOLE

0 - 3550' 2.375" OD 4.70#/ft J-55 TBG

3401 - 3406' PERFS 2 SPF (10 HOLES)

3463 - 3624' PERFS 2 SPF (28 HOLES)

3646 - 3691' CEMENT PLUG

0 - 3691' 5.5" OD 15.50#/ft J-55 PROD CSG

KB ELEV: 3277'

TD: 3691'

MERIDIAN OIL CO.
S.R. COOPER NO. 2
API# 3002509613

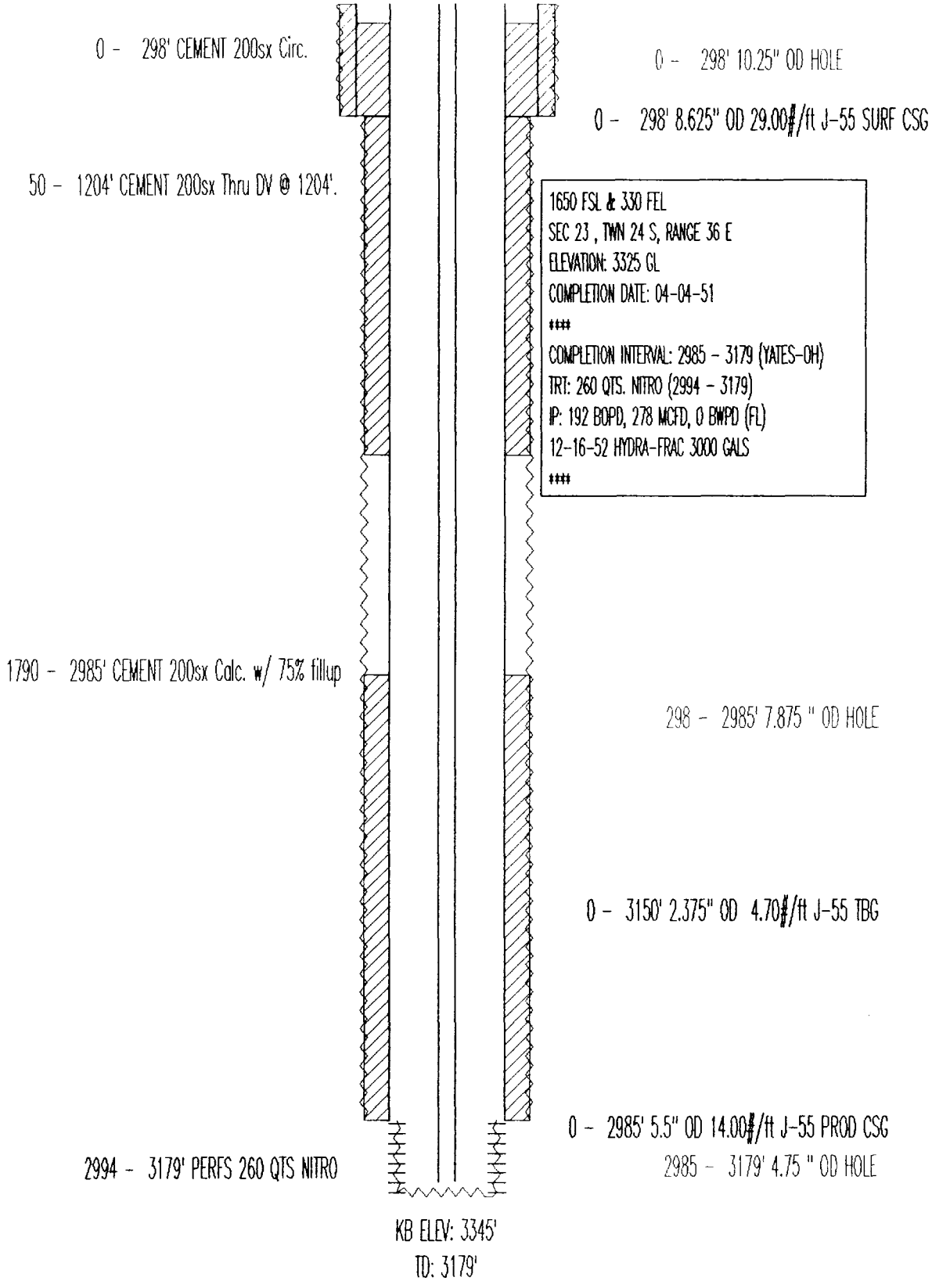

TEXACO E & P INC.
COOPER JAL UNIT NO. 101
API# 3002511145

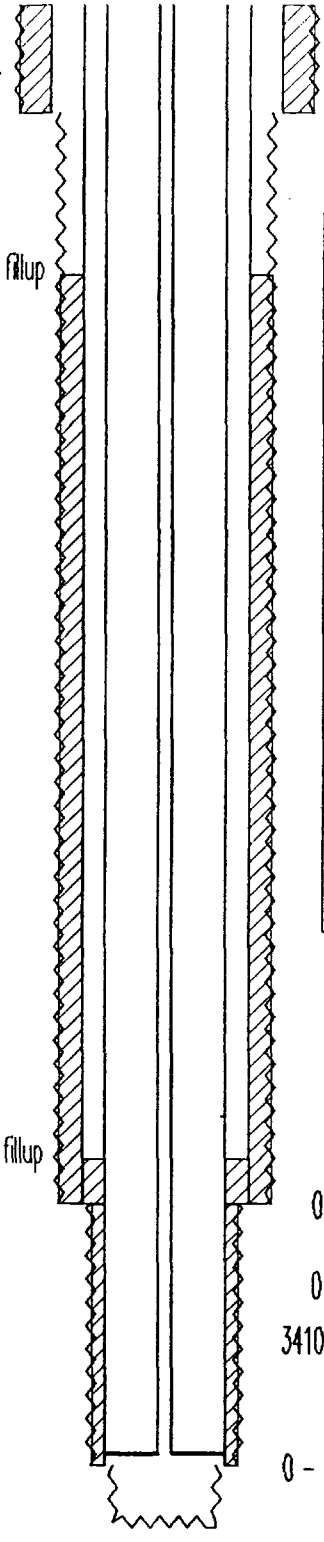

0 - 251' CEMENT 250sx Circ.

635 - 2822' CEMENT 750sx Calc w/ 75% fillup

2715 - 3440' CEMENT 100sx Calc. w/ 75% fillup

KB ELEV: 3317'
TD: 3572'

0 - 251' 17" OD HOLE

0 - 251' 13 3/8" OD 40.00#/ft H-40 SURF CSG

660 FNL & 1980 FWL
SEC 18 , TWN 24 S, RANGE 37 E
ELEVATION: 3306 GL
COMPLETION DATE: 11-24-41
****
COMPLETION INTERVAL: 3440'-3572' (QUEEN-OH)
IP: 312 OIL 0 WTR Low MCF
Initial SIBHP = 1210 psig
02-10-53 OIL FRAC 3K gals/3K # sd.
11-16-56 OIL FRAC 10K gals/12K # sd.
09-01-69 T&A'D
03-05-76 CONV. TO INJ.
09-10-84 C/O FILL
09-10-88 C/O FILL
****

251 - 2822' 12.25" OD HOLE

0 - 2822' 9 5/8" OD 47.00#/ft H-40 INT CSG

0 - 3410' 2.375" OD 4.70#/ft J-55 TBG

3410 - 3414' PACKER 7" Baker AD-1

2822 - 3440' 8.5" OD HOLE

0 - 3440' 7" OD 28.00#/ft J-55 PROD CSG

3440 - 3572' 6" OD HOLE

TEXACO E & P INC.
COOPER JAL UNIT NO. 102
API# 3002511134

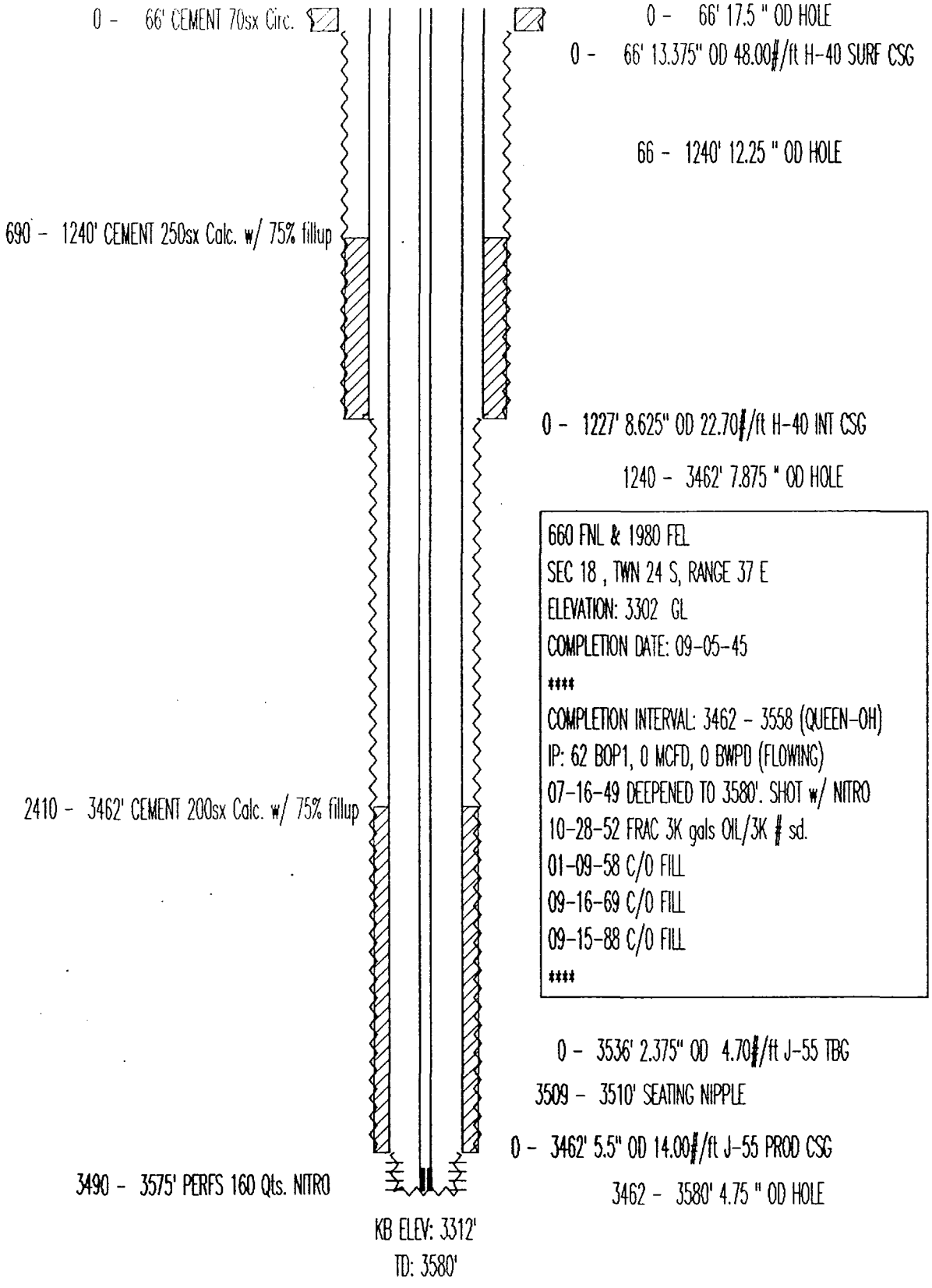

TEXACO E & P INC.
COOPER JAL UNIT NO. 103
API# 3002511135

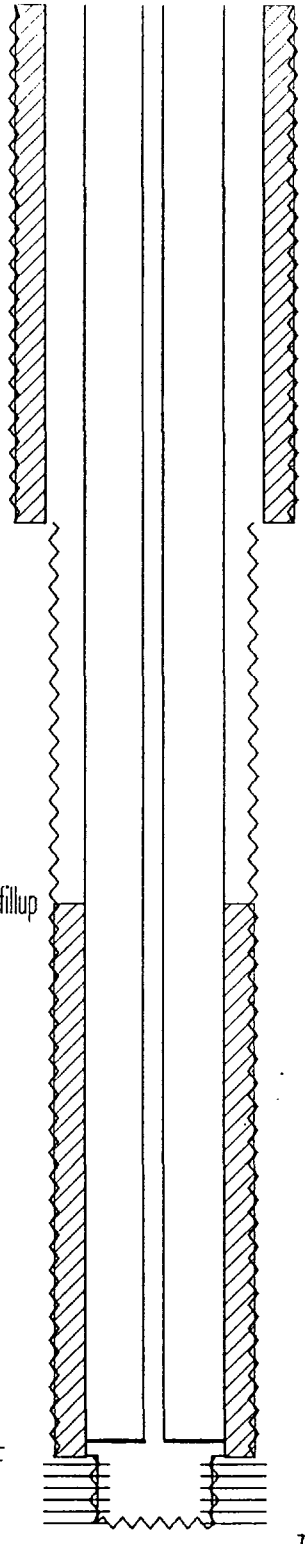

0 - 1221' 11 " OD HOLE

0 - 1221' CEMENT 400sx Circ.

0 - 1221' 8.625" OD 40.00#/ft J-55 SURF CSG

1221 - 3433' 7.875 " OD HOLE

990 FNL & 990 FEL
SEC 18 , TWN 24 S, RANGE 37 E
ELEVATION: 3306 GL
COMPLETION DATE: 08-09-46
***
COMPLETION INTERVAL: 3433 - 3591 (QUEEN-OH)
IP: 45 BOPD, 90 MCFD, 0 BWPD (FLOWING)
08-26-46 OH SHOT w/ NITRO
02-21-53 FRAC 4K gals OIL/3K # sd.
10-26-54 C/O. RAN 4-1/2" LINER (NO CMT.)
04-09-76 CONV. TO INJ.
***

2120 - 3433' CEMENT 250sx Calc. w/ 75% fillup

0 - 3393' 2.375" OD 4.70#/ft J-55 TBG

3393 - 3397' LATCH-IN PACKER BAKER AD-1

3430 - 3589' PERFS FLUSH JT. LINER / 12 HPF

3501 - 3589' PERFS 240 Qts. NITRO

0 - 3433' 5.5" OD 14.00#/ft J-55 PROD CSG

3433 - 3589' 4.75 " OD HOLE

3430 - 3589' 4 1/2" OD 9.50#/ft J-55 LINER

KB ELEV: 3315'

TD: 3589'

TEXACO E & P INC.
COOPER JAL UNIT NO. 104
API# 3002511138

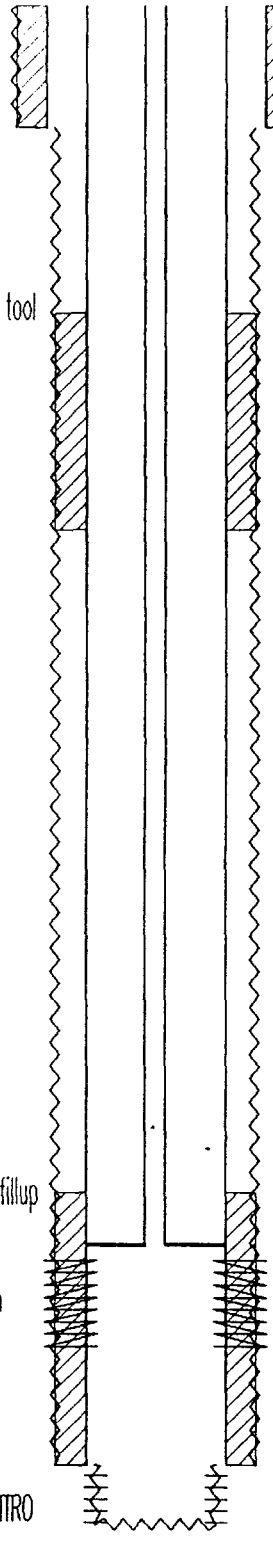

0 - 291' CEMENT 100sx Circ.

735 - 1257' CEMENT 100sx thru DV tool

2850 - 3510' CEMENT 125sx Calc. w/ 75% fillup

3015 - 3225' SQUEEZE PERFS Broke Down

3515 - 3650' PERFS 295 Qts NITRO

KB ELEV: 3312'

TD: 3655'

0 - 291' 11 " OD HOLE

0 - 291' 8.625" OD 28.00#/ft J-55 SURF CSG

1980 FNL & 660 FWL
SEC 18 , TWN 24 S, RANGE 37 E
ELEVATION: 3201 GL
COMPLETION DATE: 07-01-50
****
COMPLETION INTERVAL: 3510 - 3655 (QUEEN-OH)
TRT: 295 QTS. NITRO
IP: 7 BOPD, 0 MCFD, 0 BWPD (FLOWING) / ABAND w/ BP.
COMPLETION INTERVAL: 3015 - 3225 (YATES)
TRT: 3K gals MUD ACID
IP: 25 BOPD, 50 MCFPD ,0 BWPD
08-10-55 T&A'd WELL
08-15-71 C/O TO TD 3655'. CONV. TO INJ.
12-11-73 SQZD JALMAT 3015 - 3225'
SQZ BROKE DOWN
****

0 - 2976' 2.375" OD 4.70#/ft J-55 TBG

2976 - 2980' LATCH-IN PACKER BAKER AD-1

291 - 3510' 7.875 " OD HOLE

0 - 3510' 5.5" OD 12.00#/ft J-55 PROD CSG

3510 - 3655' 4.75" OD HOLE

TEXACO E & P INC.
COOPER JAL UNIT NO. 105
API# 3002511147

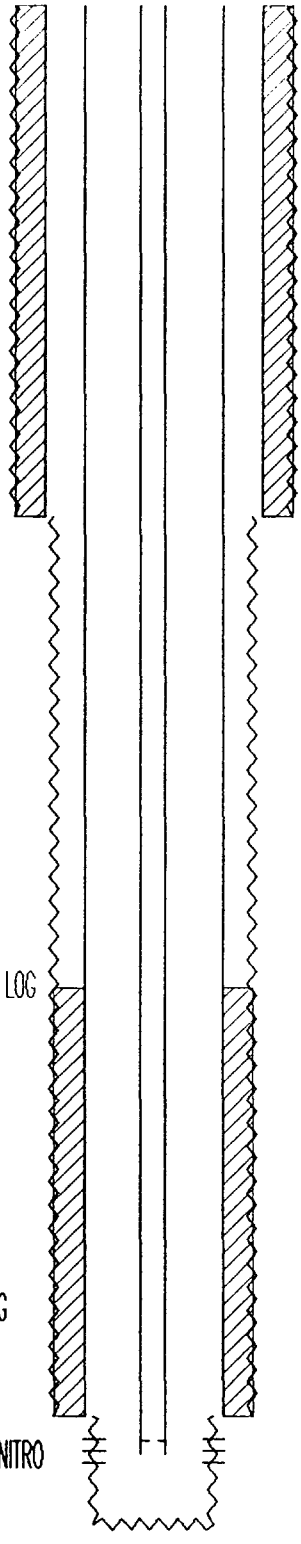

0 - 1252' CEMENT 550sx Circ.

0 - 1252' 11 " OD HOLE

0 - 1252' 8.625" OD 32.00#/ft J-55 SURF CSG

1252 - 3468' 7.875 " OD HOLE

1980 FNL & 1980 FWL
SEC 18 , TWN 24 S, RANGE 37 E
ELEVATION: 3295 GL
COMPLETION DATE: 07-12-46
****
COMPLETION INTERVAL: 3468 - 3583 (QUEEN-OH)
IP: 45 BOPD, 300 MCFD, 0 BWPD (FLOWING)
07-19-46 OH SHOT w/ NITRO
05-10-58 C/O; FRAC 10K gals OIL & 10K # sd.
09-18-74 C/O & JET WASH
09-05-85 DEEPENED WELL TO 3733'
C/O, JET WASH, ACID 2K gals,
2 STAGE FRAC w/ ROCK SALT BLOCK
42K GALS/82.5K # sd (TOTAL)
****

2410 - 3468' CEMENT 250sx TOC by TEMP. LOG

0 - 3560' 2.875" OD 6.40#/ft J-55 TBG

3527 - 3528' SEATING NIPPLE

3505 - 3580' PERFS 200 Qts. NITRO

0 - 3468' 5.5" OD 17.00#/ft J-55 PROD CSG

3468 - 3733' 4.75 " OD HOLE

KB ELEV: 3306'
TD: 3733'

TEXACO E & P INC.
COOPER JAL UNIT NO. 107
API# 3002509558

0 - 252' CEMENT 200sx Circ.

75 - 1147' CEMENT 200sx Thru DV Tool

466 - 467' SQUEEZE PERFS SQZD HOLES IN CSG

2370 - 3426' CEMENT 200sx Calc. w/ 75% fillup

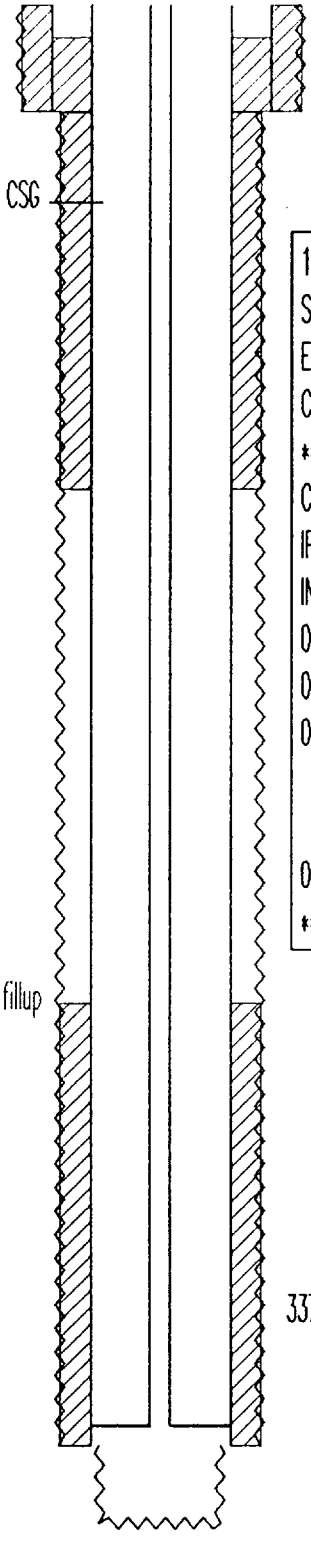

0 - 252' 11 " OD HOLE

0 - 252' 8.625" OD 28.00#/ft J-55 SURF CSG

1650 FSL & 1980 FWL
SEC 13 , TWN 24 S, RANGE 36 E
ELEVATION: 3316 GL
COMPLETION DATE: 08-26-52
****
COMPLETION INTERVAL: 3426 - 3611 (7 RVRS/QUEEN-OH)
IP: 0 BOPD, 2,800 MCFD, 0 BWPD (FL) (AOF=4.4 MMCF)
INITIAL SITP = 932 psig
01-01-56 ATTEMPTED TO PROD. INTO INT. GAS LINE
01-01-58 SHUT-IN (RECLASS. LM OIL)
02-15-73 CONV. TO INJECTION; PERFED 7 RVRS
C/O TO TD(3611')
PERF 3405-3415, ACID 1.5K gals
07-14-78 SQZD CSG LEAK @ 446'
****

252 - 3426' 7.875 " OD HOLE

0 - 3377' 2.375" OD 4.70#/ft J-55 TBG CMT LINED

3377 - 3380' LATCH-IN PACKER BAKER AD-1

0 - 3426' 5.5" OD 15.50#/ft J-55 PROD CSG

3426 - 3611' 4.75 " OD HOLE

KB ELEV: 3327'
TD: 3611'

TEXACO E & P INC.
COOPER JAL UNIT NO. 108
API# 3002511142

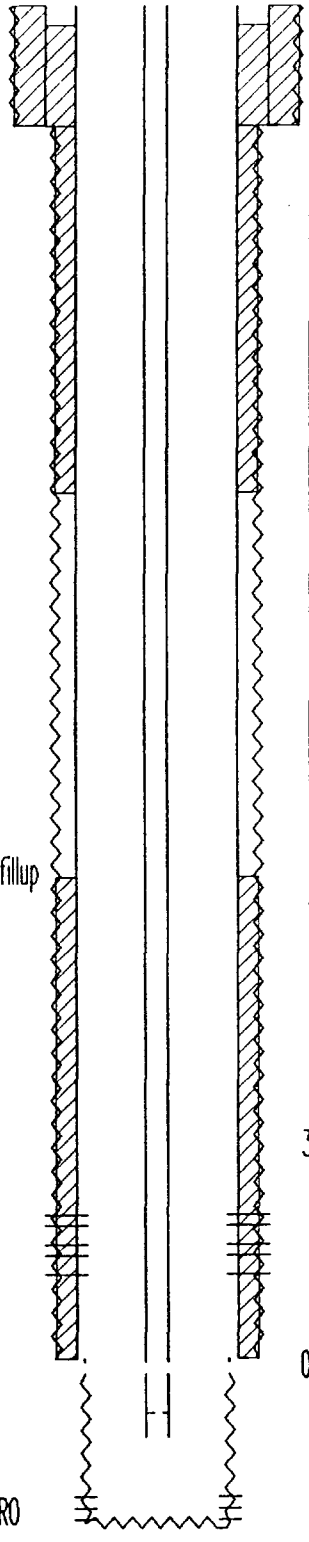

0 - 304' CEMENT 150sx Circ.

50 - 1225' CEMENT 200sx thru DV tool

2195 - 3411' CEMENT 200sx Calc. w/ 75% fillup

3034 - 3046' PERFS 30 HOLES
3062 - 3074' PERFS 30 HOLES
3110 - 3122' PERFS 30 HOLES
3138 - 3150' PERFS 30 HOLES
3185 - 3197' PERFS 60 HOLES

3595 - 3635' PERFS 100 Qts NITRO

KB ELEV: 3306'
TD: 3640'

0 - 304' 12.25" OD HOLE

0 - 304' 9.625" OD 32.00#/ft J-55 SURF CSG

1980 FSL & 660 FWL
SEC 18 , TWN 24 S, RANGE 37 E
ELEVATION: 3296 GL
COMPLETION DATE: 03-09-50
****
COMPLETION INTERVAL: 3411 - 3640 (QUEEN-OH)
TRT : 100 QTS. NITRO
IP: 14 BOPD, 25 MCFD, 0 BWPD (FLOWING)
09-21-50 PLUGGED BACK TO YATES; BP @ 3395'
IP: 6 BOPD, 2600 MCFPD, 0 BWPD
07-02-72 C/O TO TD (3640), JET WASH OH
08-03-75 C/O, FRAC 30K gals & 30K # 20/40 sd
10-05-79 INCR. PU TO BETH 228D
03-14-87 REPLACED TBG
****

304 - 3411' 8.75" OD HOLE

0 - 3513' 2.875" OD 6.40#/ft J-55 TBG

3477 - 3478' SEATING NIPPLE

0 - 3411' 7 " OD 20.00#/ft J-55 PROD CSG

3411 - 3640' 6.25" OD HOLE

TEXACO E & P INC.
COOPER JAL UNIT NO. 109
API# 3002511133

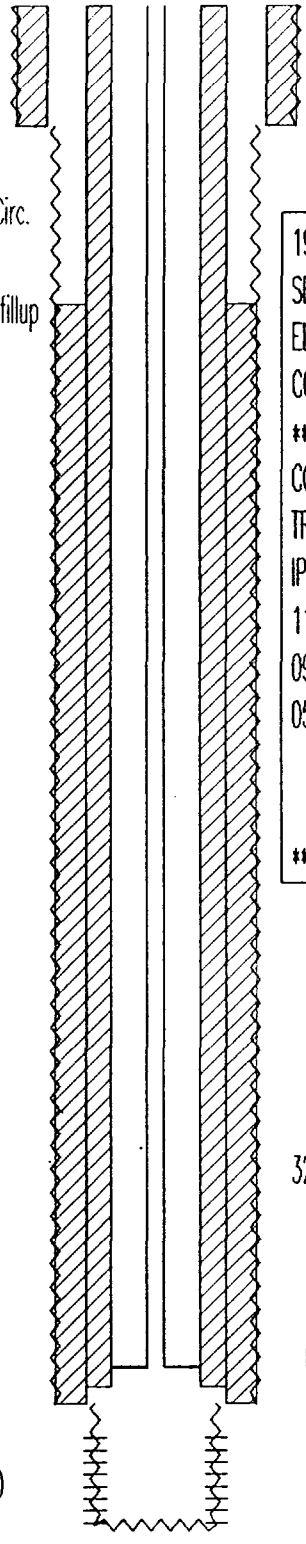

0 - 284' CEMENT 150sx Circ.

0 - 3306' CEMENT 290sx Circ.

710 - 3345' CEMENT 500sx Calc. w/ 75% fillup

3428 - 3633' PERFS 240 Qts. NITRO

KB ELEV: 3311'

TD: 3638'

0 - 284' 11 " OD HOLE

0 - 284' 8.625" OD 24.00#/ft J-55 SURF CSG

1980 FSL & 1980 FWL
SEC 18 , TWN 24 S, RANGE 37 E
ELEVATION: 3301 GL
COMPLETION DATE: 10-28-48
****
COMPLETION INTERVAL: 3345 - 3638 (7 RVS/QUEEN-OH)
TRT : 240 QTS. NITRO
IP: 124 BOPD, 235 MCFD, 0 BWPD (FLOWING)
11-25-60 C/O, FRAC 31K gals OIL/30K # sd
09-22-71 CONV. TO INJECTION
05-05-86 ATTEMPT. SQZ ON CSG LEAK 539-914
UNSUCCESSFUL
INSTALLED 3-1/2" LINER
****

284 - 3345' 7.875 " OD HOLE

0 - 3255' 2.063" OD 3.25#/ft CS-Hydril TBG

3255 - 3259' LATCH-IN PACKER BAKER AD-1

0 - 3306' 3.5" OD 9.30#/ft J-55 LINER

0 - 3345' 5.5" OD 14.00#/ft J-55 PROD CSG

3345 - 3638' 4.75 " OD HOLE

TEXACO E & P INC.
COOPER JAL UNIT NO. 110
API# 3002511143

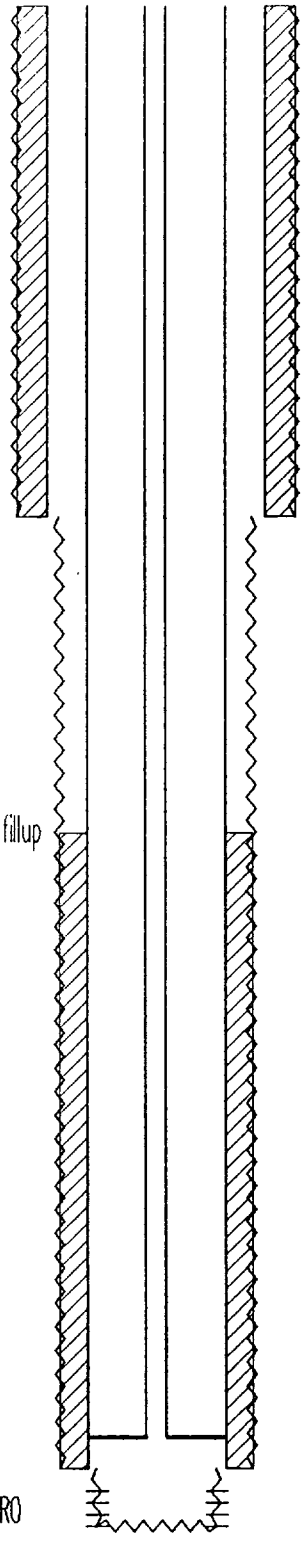

0 - 1200' CEMENT 700sx Circ.

0 - 1200' 11 " OD HOLE

0 - 1200' 8.625" OD 32.00#/ft J-55 SURF CSG

1980 FSL & 660 FEL
SEC 18 , TWN 24 S, RANGE 37 E
ELEVATION: 3303 GL
COMPLETION DATE: 09-20-46
****
COMPLETION INTERVAL: 3450 - 3587 (7 RVRS/QUEEN-OH)
TRT : 260 QTS. NITRO
IP: 55 BOPD, 60 MCFD, 0 BWPD (FLOWING)
09-15-57 C/O TO 3567'
01-11-58 T&A'd WELL
02-09-73 CONV. TO INJECTION
11-14-83 SQZD. CSG LEAK 2185 - 2600
C/O TO TD (3587')
03-28-86 RE-SQZD CSG LEAK 2185 - 2600
C/O & JET WASH OH TO 3587'
****

1950 - 3450' CEMENT 250sx Calc. w/ 75% fillup

1200 - 3450' 7.625" OD HOLE

0 - 3376' 2.375" OD 4.70#/ft J-55 TBG IPC

3376 - 3380' LATCH-IN PACKER BAKER AD-1 (IPC)

0 - 3450' 5.5" OD 14.00#/ft J-55 PROD CSG

3485 - 3587' PERFS 260 Qts. NITRO

3450 - 3587' 4.75 " OD HOLE

KB ELEV: 3313'
TD: 3587'

TEXACO E & P INC.
COOPER JAL UNIT NO. 111
API# 3002509581

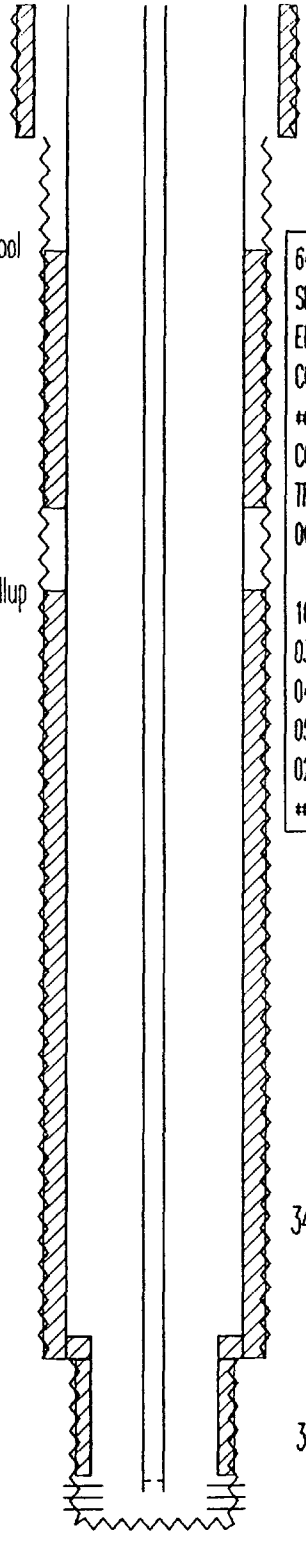

0 - 310' CEMENT 250sx Circ.

580 - 1187' CEMENT 100sx Thru DV Tool

1380 - 3203' CEMENT 300sx Calc. w/ 75% fillup

3150 - 3480' CEMENT 200sx Circ.

3490 - 3560' PERFS 4 SPF (OH)

0 - 310' 11" OD HOLE

0 - 310' 9.625" OD 36.00#/ft J-55 SURF CSG

640 FSL & 330 FEL
SEC 14 , TWN 24 S, RANGE 36 E
ELEVATION: 3334 GL
COMPLETION DATE: 02-21-50
###
COMPLETION INTERVAL: 3202 - 3595 (7 RVRS/QUEEN-OH)
TRT: NATURAL; IP: 8 BOPD, 171 MCFD, 89 BWPD (FL)
06-24-55 INSTALLED 5" LINER; PERF 3490 - 3560
FRAC 10K gals OIL / 11K # sd.
10-05-62 C/O SAND
03-15-65 ACID 1K gals
04-03-65 C/O SAND 3542 - 3566
05-28-71 C/O SAND
02-13-76 ACID 1K gals; SCALE SQZ
###

310 - 3203' 8.75" OD HOLE

0 - 3516' 2.375" OD 4.70#/ft J-55 TBG

3491 - 3492' SEATING NIPPLE

0 - 3203' 7" OD 20.00#/ft J-55 PROD CSG

3150 - 3480' 5" OD 15.00#/ft J-55 LINER

3203 - 3595' 6.25" OD HOLE

KB ELEV: 3343'

TD: 3595'

TEXACO E & P INC.
COOPER JAL UNIT NO. 112
API# 3002509557

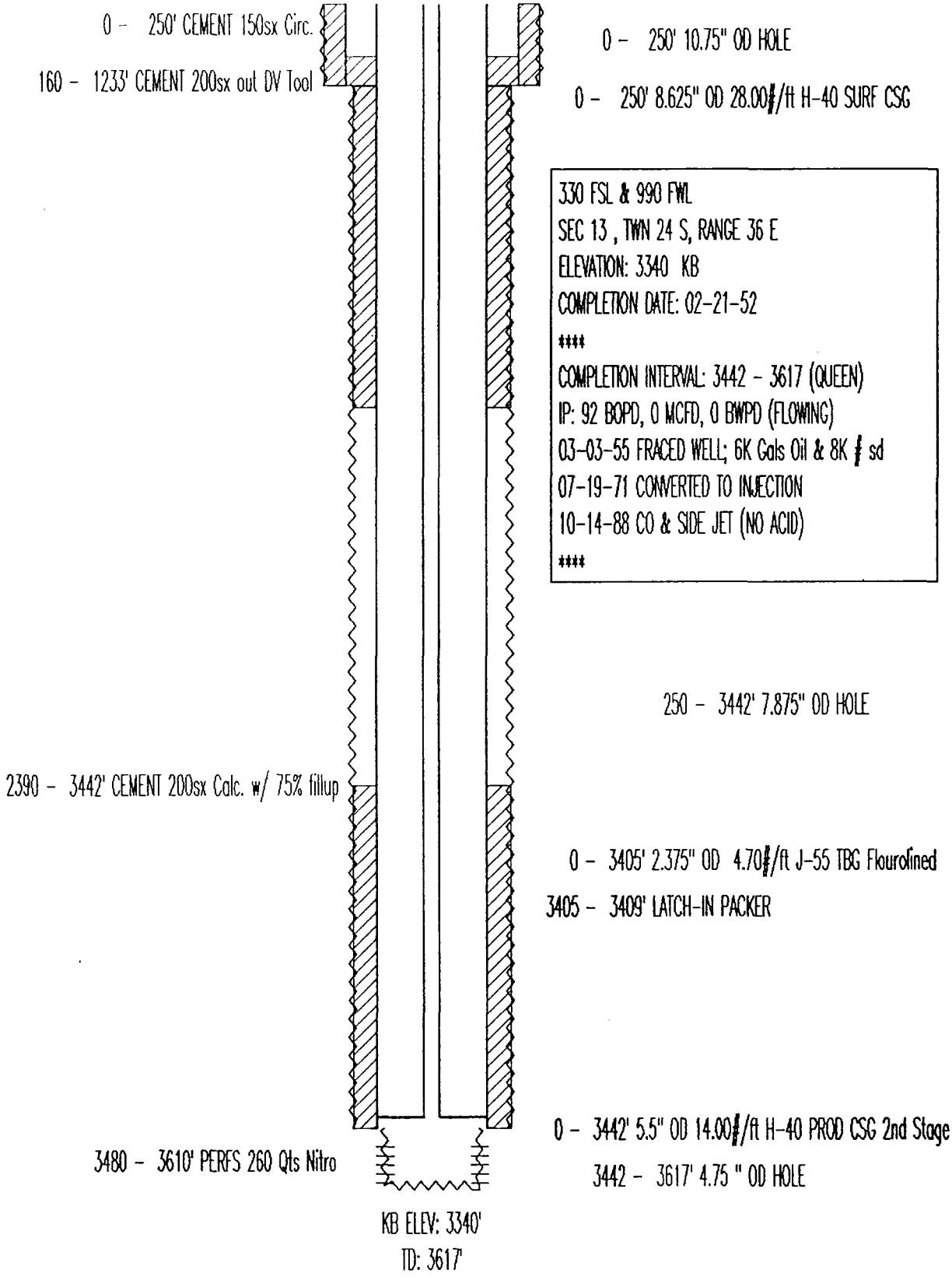

TEXACO E & P INC.
COOPER JAL UNIT NO. 113
API# 3002509496

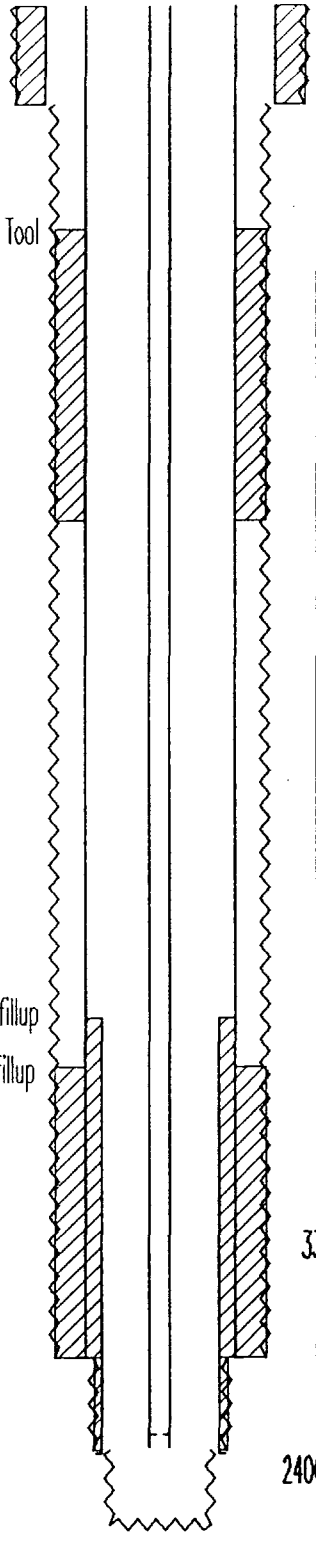

0 - 233' CEMENT 125sx Circ.

530 - 1220' CEMENT 200sx Thru DV Tool

2406 - 3436' CEMENT 150sx Calc. w/ 75% fillup

2525 - 3215' CEMENT 200sx Calc. w/ 75% fillup

KB ELEV: 3334'

TD: 3615'

0 - 233' 13.5 " OD HOLE

0 - 233' 10.75" OD 40.00#/ft J-55 SURF CSG

330 FSL & 2310 FWL
SEC 13 , TWN 24 S, RANGE 36 E
ELEVATION: 3327 GL
COMPLETION DATE: 12-02-51
##
COMPLETION INTERVAL: 3436 - 3615 (7 RVRS/QUEEN-OH)
IP: 96 BOPD, 122 MCFD, 0 BWPD (FLOWING)
INITIAL SITP = 700 psig
02-15-55 C/O, FRAC 6K gals OIL/ 8K # sd
08-05-58 C/O FILL 3493 - 3605
12-22-69 C/O FILL 3500 - 3610
03-26-74 INSTALLED 228D PU
03-16-77 INSTALLED NEW 2-7/8" TBG
05-24-77 INSTALLED 456D PU
09-14-87 C/O TO 3615
##

233 - 3215' 9.875" OD HOLE

0 - 3430' 2.875" OD 6.40#/ft J-55 TBG

3399 - 3400' SEATING NIPPLE

0 - 3215' 7 " OD 17.00#/ft J-55 INT CSG

3215 - 3436' 6.25" OD HOLE

2406 - 3446' 5.5" OD 14.00#/ft J-55 PROD CSG

3436 - 3615' 4.75 " OD HOLE

TEXACO E & P INC.
COOPER JAL UNIT NO. 114
API# 3002509559

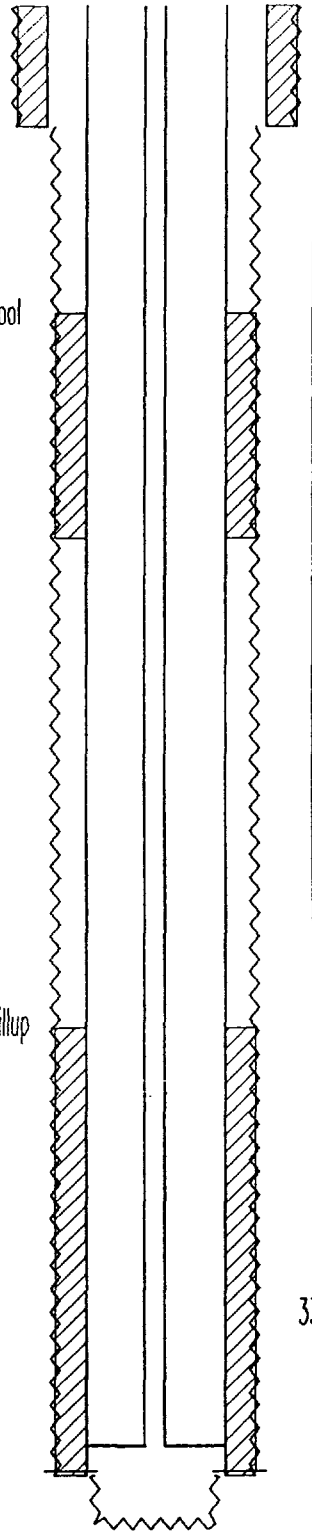

0 - 280' CEMENT 250sx Circ.

715 - 1241' CEMENT 100sx Thru DV Tool

2385 - 3438' CEMENT 200sx Calc. w/ 75% fillup

3423 - 3429' PERFS 2 SPF (14 HOLES)

KB ELEV: 3327'
PBTD: 3540'
TD: 3550'

0 - 280' 11 " OD HOLE

0 - 280' 8.625" OD 20.00#/ft J-55 SURF CSG

330 FSL & 2310 FEL
SEC 13 , TWN 24 S, RANGE 36 E
ELEVATION: 3320 GL
COMPLETION DATE: 09-21-54
###
COMPLETION INTERVAL: 3438 - 355 (7 RVRS/QUEEN-OH)
IP: 90 BOPD, 101 MCFD, 0 BWPD (FL)
10-09-64 INSTALLED ROD PMP UNIT
12-16-64 PB TO 3495'. PERF 3423 - 3429
FRAC 10K gals OIL / 10K# 20/40 &
10K # 10/20 sd
PB TO 3440; FRAC 5K gals OIL /
7.5K # 20/40 & 2.5K # 10/20 sd
07-29-71 CONVERTED TO INJECTION
01/14/88 C/O TO 3540'.
INSTALLED NEW CMT LINED TBG
###

280 - 3438' 7.875 " OD HOLE

0 - 3368' 2.375" OD 4.70#/ft J-55 TBG CMT LINED

3368 - 3371' LATCH-IN PACKER BAKER AD-1

0 - 3438' 5.5" OD 15.50#/ft J-55 PROD CSG

3438 - 3550' 4.75 " OD HOLE

TEXACO E & P INC.
COOPER JAL UNIT NO. 115
API# 3002509566

0 - 1182' CEMENT 550sx Circ.

0 - 30' 17.5 " OD HOLE

30 - 1182' 12.25 " OD HOLE

990 FSL & 990 FEL
SEC 13 , TWN 24 S, RANGE 36 E
ELEVATION: 3327 GL
COMPLETION DATE: 05-07-47
****
COMPLETION INTERVAL: 3015 - 3505 (YATES/7RVRS/QN-OH)
IP: 145 BOPD, 580 MCFD, 0 BWPD (FL)
INITIAL SITP = 1175 psig
03-23-55 FRAC 10K gals OIL / 10K # sd
07-28-73 C/O FILL 3270-3505. DEEPENED TO 3662'
03-17-75 C/O 3456-3662. SET 4-1/2" LINER;
PERF 3426, 35, 46, 3458-68, 3486-96, &
3510-18 (34 HOLES); ACID 2.5K gals
FRAC 40K gals/30K # 20/40, 10K # 10/20
(MAX CONC. 1.5ppg)
03-22-75 INSTALLED 228D PU
04-10-75 C/O FILL TO 3567.
06-23-75 C/O FILL 3545-3662.
10-23-75 C/O FILL TO 3667.
05-02-78 PERFED JALMAT 3046-3153, (6 HOLES)
3221-3303 (12 HOLES); ACID 11K gals
03-17-86 C/O FILL 3480-3662.
12-22-87 TAGGED FILL 3632.
****

0 - 1182' 9.625" OD 36.00#/ft J-55 INT CSG

1190 - 3015' CEMENT 300sx Calc. w/ 75% fillup

1182 - 3015' 8.75" OD HOLE

2942 - 3668' CEMENT 750sx Circ.

3046 - 3153' PERFS 1 SPF (6 HOLES)
3221 - 3303' PERFS 1 SPF (12 HOLES)
3426 - 3446' PERFS 1 SPF (3 HOLES)
3458 - 3468' PERFS 1 SPF (11 HOLES)
3486 - 3496' PERFS 1 SPF (11 HOLES)
3510 - 3518' PERFS 1 SPF (9 HOLES)

0 - 3015' 7" OD 24.00#/ft J-55 PROD CSG

0 - 3598' 2.375" OD 4.70#/ft J-55 TBG

3567 - 3568' SEATING NIPPLE

3015 - 3668' 6.25" OD HOLE

2942 - 3668' 4.5" OD 10.60#/ft J-55 LINER

KB ELEV: 3335'

TD: 3668'

TEXACO E & P INC.
COOPER JAL UNIT NO. 116/235
API# 3002511141

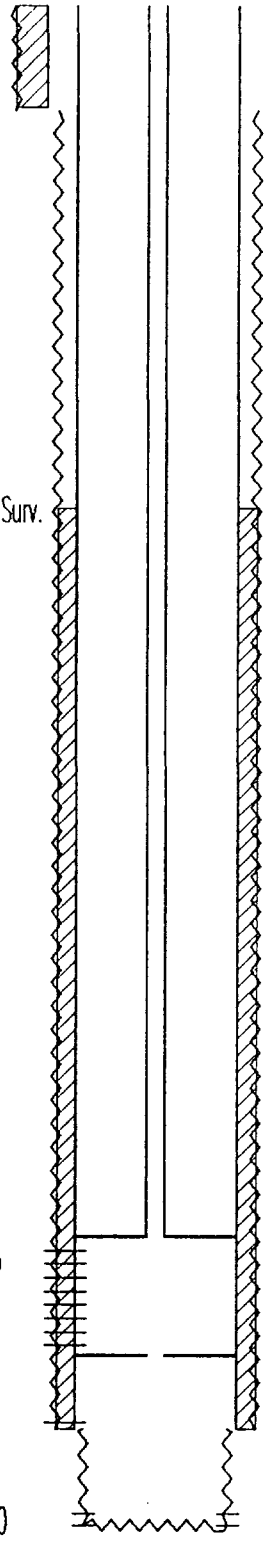

0 - 243' CEMENT 150sx Circ.

1201 - 3410' CEMENT 500sx TOC by Temp. Surv.

2980 - 3208' PERFS 1 SPF (107 HOLES)

3376 - 3396' PERFS 1 SPF (11 HOLES)

3600 - 3641' PERFS 100 Qts. NITRO

KB ELEV: 3317'
TD: 3641'

0 - 250' 12.25 " OD HOLE

0 - 243' 9.625" OD 40.00#/ft J-55 SURF CSG

660 FSL & 660 FWL
SEC 18 , TWN 24 S, RANGE 37 E
ELEVATION: 3307 GL
COMPLETION DATE: 03-09-50
****
COMPLETION INTERVAL: 3410 - 3641 (7 RVRS/QUEEN-OH)
TRT : 100 QTS. NITRO
IP: 15 BOPD, 2,000 MCFD, 0 BWPD (FLOWING)
09-10-71 CONV. TO DUAL INJECTOR
PERF JM; 2980 - 3208. ACID 4K gals
PERF 7R; 3376 - 3396. ACID 1K gals
C/O TO TD (3641')
08-21-87 C/O TO 3641'. ACID (2980 - 3641)
w/ 2.5K gals (4 STAGES)
****

250 - 3410' 8.625" OD HOLE

0 - 2945' 2.375" OD 4.70#/ft J-55 TBG IPC

2945 - 2949' LATCH-IN PACKER BAKER AD-1

(Throttling Pkr.)

3230 - 3234' PACKER BAKER MODEL 'B' TENSION

0 - 3410' 7 " OD 20.00#/ft J-55 PROD CSG

3410 - 3641' 6.25" OD HOLE

TEXACO E & P INC.
COOPER JAL UNIT NO. 117
API# 3002511140

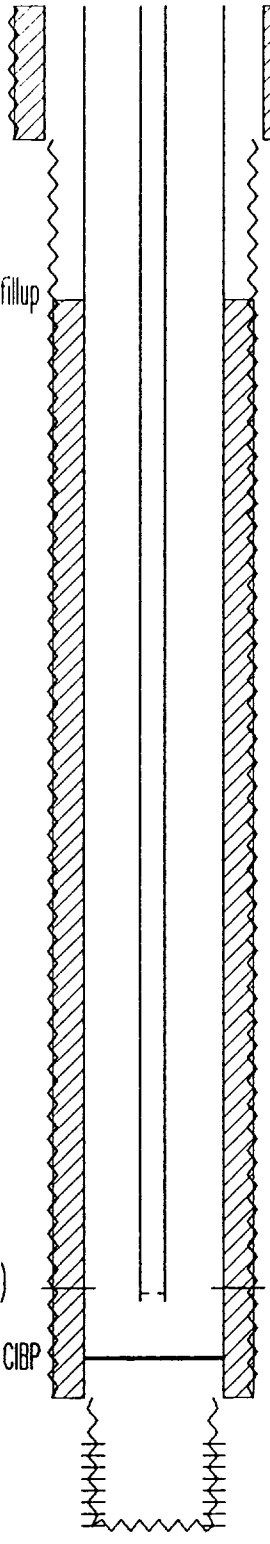

0 - 320' CEMENT 150sx Circ.

0 - 320' 11 " OD HOLE

0 - 320' 8.625" OD 24.00#/ft J-55 SURF CSG

705 - 3341' CEMENT 500sx Calc. w/ 75% fillup

660 FSL & 1980 FWL
SEC 18 , TWN 24 S, RANGE 37 E
ELEVATION: 3308 GL
COMPLETION DATE: 11-24-48
****
COMPLETION INTERVAL: 3341 - 3648 (7 RVRS/QUEEN-OH)
TRT : 290 QTS. NITRO
IP: 65 BOPD, 72 MCFD, 0 BWPD (FLOWING)
01-17-74 SQZD CSG LEAK; 535 - 878'
08-06-74 C/O TO 3626' (HOLE CONT. TO FILL)
10-24-74 C/O TO 3621'; FRAC 60K gals /
45K # 20/40 & 36K # 12/20
05-21-92 PB TO JM. PERF 3058 - 3078
FRAC 70K gals/220K # 12/20 & 21K # 12/20 RCS
IP : 0 BOPD, 545 MCFPD, 17 BWPD
****

320 - 3341' 7.875 " OD HOLE

0 - 3107' 2.875" OD 6.40#/ft J-55 TBG

3089 - 3090' SEATING NIPPLE

3058 - 3078' PERFS 8 SPF (160 HOLES)

3243 - 3246' CIBP

0 - 3341' 5.5" OD 14.00#/ft J-55 PROD CSG

3450 - 3648' PERFS 290 Qts. NITRO

3341 - 3648' 4.75 " OD HOLE

KB ELEV: 3320'
PBTD: 3243'
TD: 3648'

TEXACO E & P INC.
COOPER JAL UNIT NO. 118
API# 3002511139

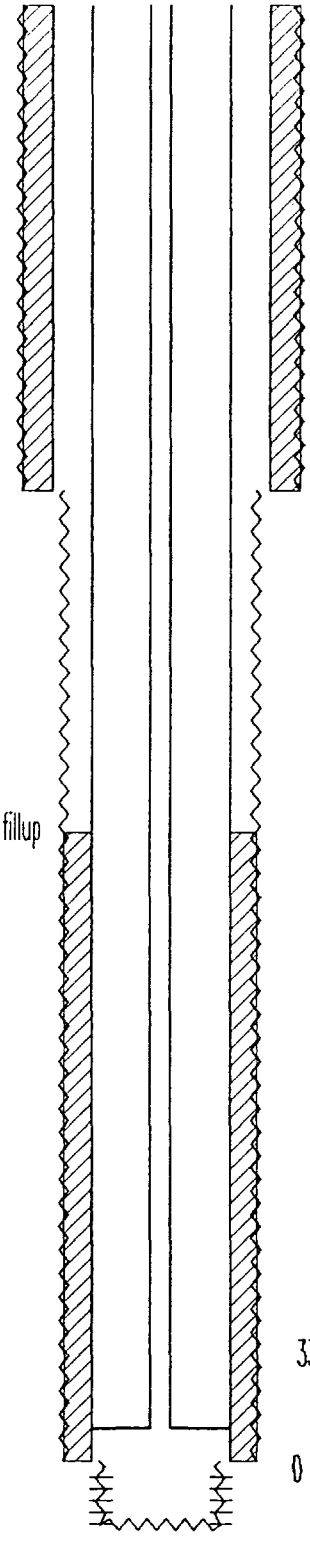

0 - 1157' CEMENT 500sx Circ.

0 - 1157' 11 " OD HOLE

0 - 1157' 8.625" OD 32.00#/ft J-55 SURF CSG

660 FSL & 1980 FEL
SEC 18 , TWN 24 S, RANGE 37 E
ELEVATION: 3302 GL
COMPLETION DATE: 09-26-46
###
COMPLETION INTERVAL: 3474 - 3628 (7 RVRS/QUEEN-OH)
TRT : 340 QTS. NITRO
IP: 68 BOPD, 76 MCFD, 0 BWPD (FLOWING)
02-01-61 T&A'd WELL
09-07-71 CONV. TO INJECTION
C/O TO TD (3628')
09-14-88 C/O TO 3620'
INSTALLED NEW INJ. TBG.
###

1970 - 3474' CEMENT 250sx Calc. w/ 75% fillup

1157 - 3474' 7.625" OD HOLE

0 - 3395' 2.375" OD 4.70#/ft J-55 TBG CMT LINED

3395 - 3399' LATCH-IN PACKER BAKER AD-1

0 - 3474' 5.5" OD 15.50#/ft J-55 PROD CSG

3498 - 3625' PERFS 340 Qts. NITRO

3474 - 3628' 4.75 " OD HOLE

KB ELEV: 3311'
TD: 3628'

TEXACO E & P INC.
COOPER JAL UNIT NO. 119
API# 3002511144

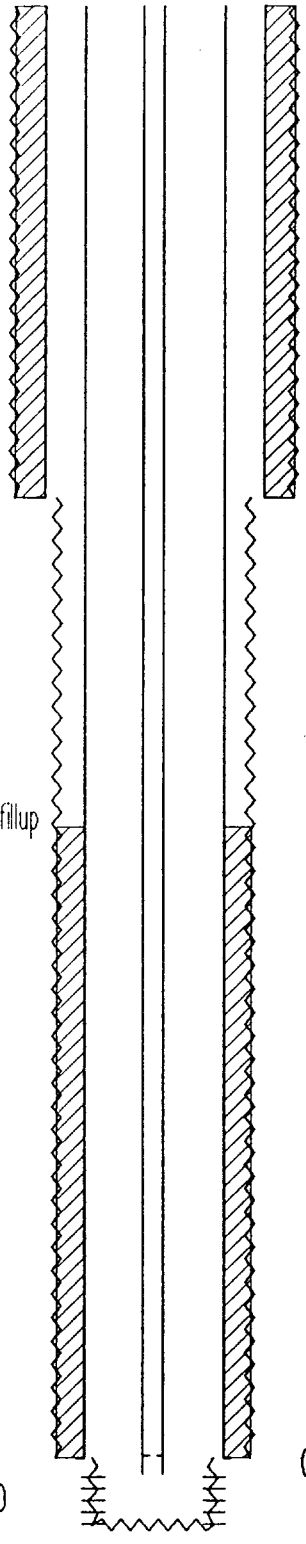

0 - 1160' 11 " OD HOLE

0 - 1160' CEMENT 450sx Circ.

0 - 1160' 8.625" OD 32.00#/ft J-55 SURF CSG

660 FSL & 660 FEL
SEC 18 , TWN 24 S, RANGE 37 E
ELEVATION: 3303 GL
COMPLETION DATE: 07-07-46
****
COMPLETION INTERVAL: 3438 - 3597 (7 RVRS/QUEEN-OH)
TRT : 330 QTS. NITRO
IP: 108 BOPD, 132 MCFD, 0 BWPD (FLOWING)
10-15-51 C/O SAND
12-01-56 PLACED ON ROD PMP
02-11-63 C/O SAND
04-02-66 C/O SAND
12-01-69 T&A'd WELL
12-02-72 REPAIRED PMP & PLACED ON PROD.
06-17-77 C/O FILL 3562-3597.
08-27-82 C/O FILL 3570-3597; ACID 2K gals,
FRAC 30K gals/36K # 20/40 & 18K # 12/20
IN 3 STAGES (W/ ROCK SALT BLOCKS!!)
****

1940 - 3440' CEMENT 250sx Calc. w/ 75% fillup

1160 - 3438' 7.625" OD HOLE

0 - 3476' 2.375" OD 4.70#/ft J-55 TBG

3432 - 3433' SEATING NIPPLE

0 - 3438' 5.5" OD 15.50#/ft J-55 PROD CSG

3471 - 3595' PERFS 330 Qts. NITRO

3438 - 3597' 4.75 " OD HOLE

KB ELEV: 3313'
TD: 3597'

TEXACO E & P INC.
COOPER JAL UNIT NO. 120/236
API# 3002509631

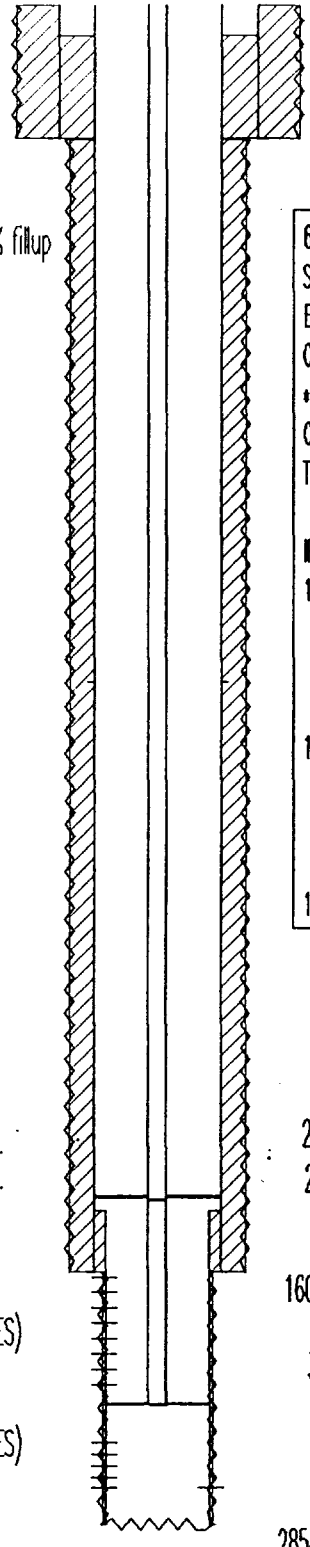

0 - 315' CEMENT 150sx Circ.

70 - 3000' CEMENT 650sx Calc. w/ 75% fillup

2854 - 3604' CEMENT 45sx Cmt Circ.

3011 - 3270' PERFS 1 SPF (81 HOLES)

3408 - 3492' PERFS 1 SPF (37 HOLES)

3500 - 3516' PERFS 4 SPF (68 HOLES)

KB ELEV: 3326'

TD: 3604'

0 - 315' 12.25" OD HOLE

0 - 315' 8 5/8" OD 29.75#/ft J-55 SURF CSG

660 FNL & 1980 FWL
SEC 24 , TWN 24 S, RANGE 36 E
ELEVATION: 3315 GL
COMPLETION DATE: 11-11-51
****
COMPLETION INTERVAL: 3000 - 3195 (YATES-OH)
TRT : HYDRA-FRAC 1.5K gals KEROSENE, 500# NAPALM,
800# OTTAWA SD AND 70bbl OIL
IP: 207 BOPD, 337 MCFD, 0 BWPD (FL)
12-19-54 DEEPENED TO LM. DRILLED TO 3604'. SET 4-1/2"
LINER 2854 - 3604'. PERFED LM 3500-3512'
(4 SPF 68 HOLES). FRAC 6K gals OIL / 6K # sd.
IP : 581.2 BOPD, 389 MCFPD, 0 BWPD (FL).
10-07-71 CONVERTED TO DUAL INJECTOR. PERFED JM 3011 -
3270 (1 SPF 81 HOLES) & PERFED LM 3408 - 3492
(1 SPF 37 HOLES). ACID LM w/ 1.6K gals & ACID
JM w/ 3.86K gals. SET DUAL PKRS.
10-14-88 DUAL PKR. EQUIP. PLUGGED UP. WELL SI.

315 - 3000' 7.625" OD HOLE

0 - 3314' 2.375" OD 4.70#/ft J-55 TBG IPC

2820 - 2823' RETRV. PACKER BAKER TANDEM TEN.

2830 - 2832' PORTED NIPPLE BAKER FULL OPEN BF(FLOW REG.)

0 - 1600' 5 1/2" OD 15.50#/ft J-55 PROD CSG

1600 - 3000' 5 1/2" OD 17.00#/ft J-55 PROD CSG

3314 - 3317' RETRV. PACKER BAKER AD-1

3317 - 3319' PORTED NIPPLE MOD. BAKER BF (FLOW REG.)

3000 - 3604' 4.75" OD HOLE

2854 - 3604' 4 1/2" OD 9.50#/ft FJ J-55 LINER

TEXACO E & P INC.
COOPER JAL UNIT NO. 121
API# 3002509645

0 - 30' CEMENT 30sx Circ.

0 - 1179' CEMENT 550sx Circ.

685 - 3017' CEMENT 350sx Calc. w/ 75% fillup

990 FNL & 1650 FEL
SEC 24 , TWN 24 S, RANGE 36 E
ELEVATION: 3303 GL
COMPLETION DATE: 01-22-49
****
COMPLETION INTERVAL: 3017 - 3520 (YATES/7 RVRS/QN-GR)
TRT: ACID 500 gals & JET SHOT 3025-3470 (NO REC.)
IP: 30 BOPD, 45 MCFD, 0 BWPD (FL)
01-01-55 C/O TO 3505'. FRAC 10K gals OIL / 10K # sd.
(2 STAGES - 500# ROCK SALT)
01-15-73 TAGGED FILL @ 3126' (394' FILL).
02-23-73 C/O FILL TO TD.
07-08-74 TAGGED FILL @ 3040' (480' FILL). C/O TO 3520'.
DEEPENED TO 3560'.
01-25-75 C/O FILL 3075'-3555'. SET 4-1/2" LINER.
PERFED 3423,32,34,3458-72,3490-3500,3512-22
(ALL 1 SPF - 40 HOLES);
ACID 2.5K gals ; FRAC 40K gals / 30K # 20/40 &
12K # 12/20 (20 BPM - DROPPED 25 BALLS)
09-25-75 C/O FILL 3480-3560'. SCALE SQZD.
ACID 1.5K gals
01-17-78 PERFED JALMAT 3018-3292 (1 SPF - 33 HOLES)
ACID 4K gals ; FRAC 40K gals 31.5K # 20/40 &
9K # 10/20 (3 STAGES); TESTED:M - DHC JN & LM.
02-11-87 TAGGED FILL @ 3511' (49').
****

2966 - 3560' CEMENT 700sx Circ.

3018 - 3077' PERFS 1 SPF (9 HOLES)
3099 - 3181' PERFS 1 SPF (12 HOLES)
3215 - 3236' PERFS 1 SPF (7 HOLES)
3281 - 3292' PERFS 1 SPF (5 HOLES)

3423 - 3423' PERFS 1 HOLE
3432 - 3434' PERFS 2 HOLES
3490 - 3500' PERFS 1 SPF (11 HOLES)
3512 - 3522' PERFS 1 SPF (11 HOLES)

KB ELEV: 3314'
TD: 3560'

0 - 30' 17.5 " OD HOLE

0 - 30' 13.375" OD 68.00#/ft J-55 SURF CSG

30 - 1179' 12.25" OD HOLE

0 - 1179' 9.625" OD 40.00#/ft J-55 INT CSG

1179 - 3017' 8.625" OD HOLE

0 - 3450' 2.375" OD 4.70#/ft J-55 TBG

0 - 3017' 7 " OD 20.00#/ft J-55 PROD CSG

3017 - 3560' 6.125 " OD HOLE

2966 - 3560' 4.5" OD 10.50#/ft H-40 LINER

TEXACO E & P INC.
COOPER JAL UNIT NO. 122
API# 3002509638

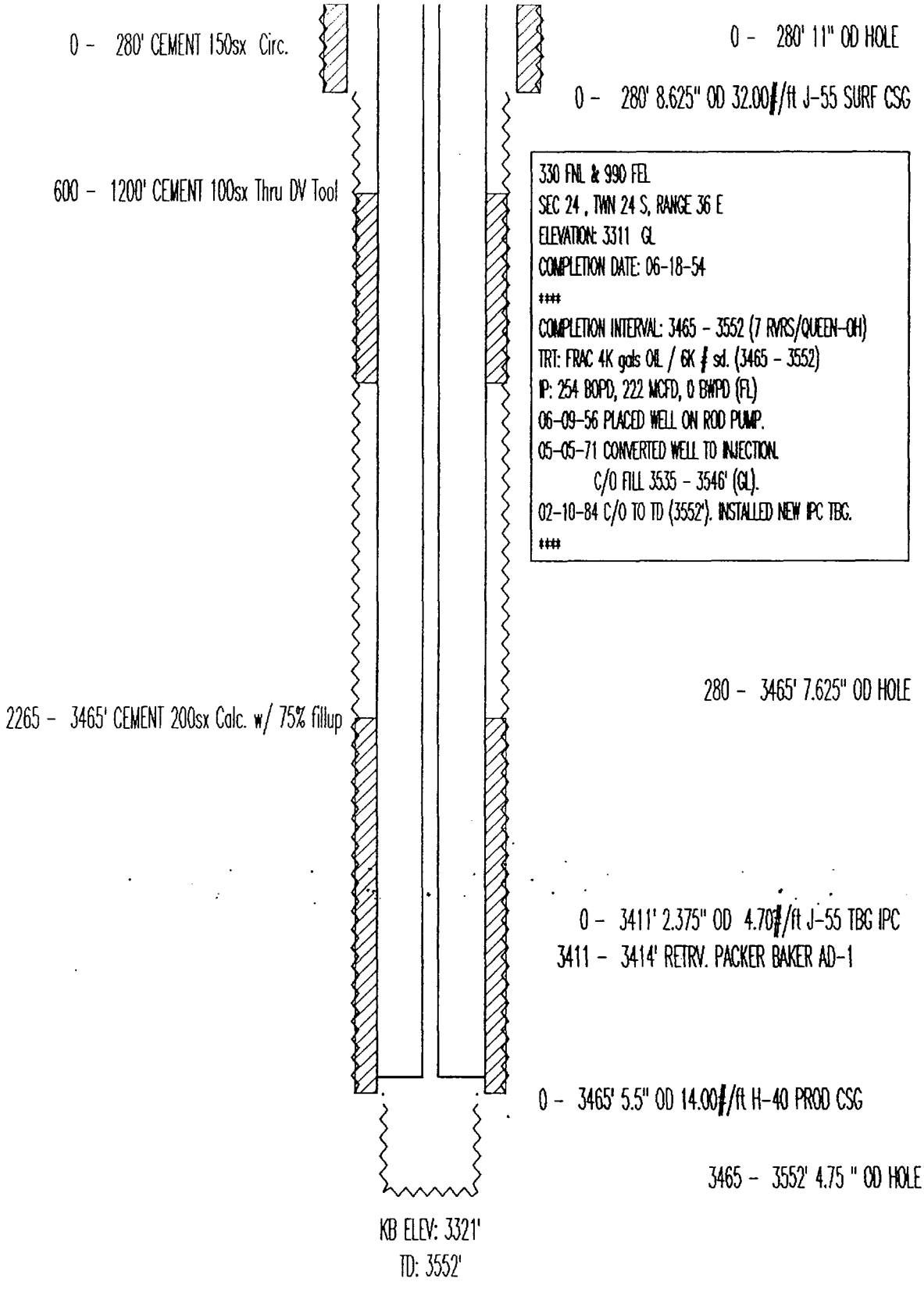

TEXACO E & P INC.
COOPER JAL UNIT NO. 123
API# 3002511150

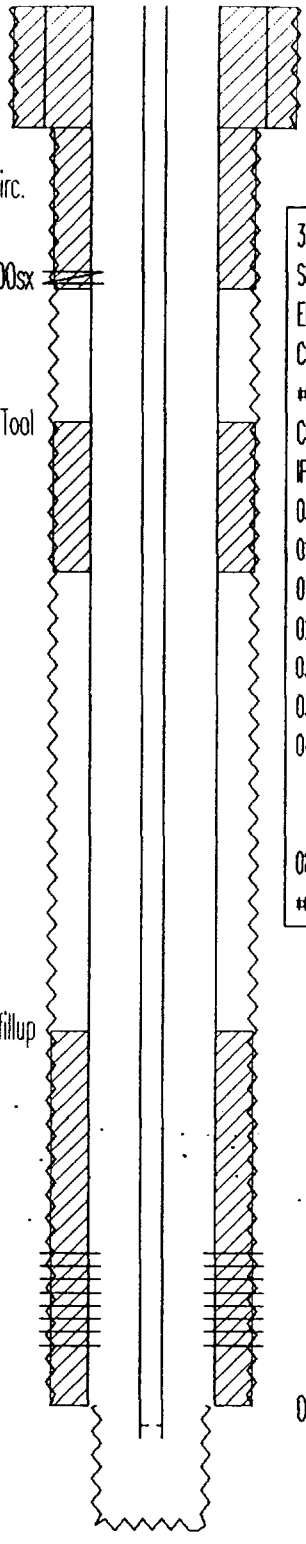

0 - 290' CEMENT 150sx Circ.

0 - 675' CEMENT 300sx Sqz Circ.

634 - 664' SQUEEZE PERFS CSG HOLES SQZD w/ 300sx

995 - 1357' CEMENT 100sx Thru DV Tool

2460 - 3363' CEMENT 250sx Calc. w/ 75% fillup

2996 - 3217' PERFS 2 SPF (90 HOLES)

KB ELEV: 3310'
TD: 3650'

0 - 290' 12.25 " OD HOLE

0 - 290' 9.625" OD 36.00#/ft J-55 SURF CSG

330 FNL & 990 FWL
SEC 19 , TWN 24 S, RANGE 37 E
ELEVATION: 3302 GL
COMPLETION DATE: 05-02-52
###
COMPLETION INTERVAL: 3363 - 3650 (7 RVRS/QUEEN-OH)
IP: 70 BOPD, 82 MCFD, 0 BWPD (FL); FTP=480 psig
03-04-56 FRAC 20K gals OIL/ 20K # sd
02-28-58 C/O SAND 3510-3540
01-23-60 C/O SAND 3506-3600
02-06-76 ACID 400 gals
03-21-89 C/O LM; ACID 4K gals
03-31-89 CMT SQZ CSG LEAKS 634 - 664.
04-15-89 PERF JALMAT 2996-3217; ACID 5K gals;
FRAC 40K gals / 80K # 12/20 (MAX CONC. 6 ppg)
(IN 2 STAGES w/ 62 BALLS BETWEEN STAGES)
08-25-92 REPLACED TBG; INSTALLED NEW ROD STRING.
###

290 - 3363' 8.75" OD HOLE

0 - 3443' 2.875" OD 6.40#/ft J-55 TBG

3410 - 3411' SEATING NIPPLE

0 - 3363' 5.5" OD 17.00#/ft J-55 PROD CSG

3363 - 3650' 4.75 " OD HOLE

TEXACO E & P INC.
COOPER JAL UNIT NO. 124
API# 3002511153

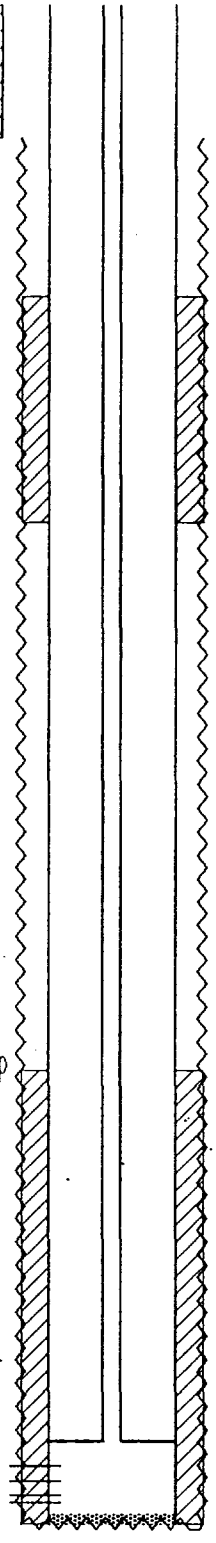

0 - 308' CEMENT 175sx Circ.

0 - 308' 12.25 " OD HOLE

0 - 308' 9.625" OD 36.00#/ft J-55 SURF CSG

675 - 1200' CEMENT 100sx Thru DV Tool

660 FNL & 1917 FWL
SEC 19 , TWN 24 S, RANGE 37 E
ELEVATION: 3301 GL
COMPLETION DATE: 03-09-56
****
COMPLETION INTERVAL: 3380 - 3482 (7 RVRS/QUEEN)
TRT: FRAC 8.8K gals OIL / 13K # sd (3380 - 3432)
TRT: FRAC 10.8K gals OIL / 15K # sd (3448 - 3482)
IP: 54 BOPD, 63 MCFD, 0 BWPD (FL)
07-22-71 CONVERTED TO INJECTION
C/O FILL 3440 - 3508
07-24-82 FOUND HOLE IN TBG. REPLACED BAD TBG.
****

308 - 3530' 7.875" OD HOLE

2475 - 3530' CEMENT 200sx Calc. w/ 75% fillup

0 - 3336' 2.375" OD 4.70#/ft J-55 TBG CMT LINED

3336 - 3339' LATCH-IN PACKER BAKER AD-1

3380 - 3396' PERFS ASSUMED 1 SPF
3414 - 3432' PERFS ASS. 1 SPF

3470 - 3482' PERFS 1 SPF
3448 - 3463' PERFS 1 SPF

0 - 3528' 5.5" OD 15.50#/ft J-55 PROD CSG

3508 - 3530' SAND FILL

KB ELEV: 3312'
TD: 3530'

TEXACO E & P INC.
COOPER JAL UNIT NO. 125
API# 3002509632

0 - 1184' CEMENT 375sx Circ.

0 - 1184' 11 " OD HOLE

0 - 1184' 8.625" OD 24.00#/ft J-55 SURF CSG

1184 - 3655' 7.875 " OD HOLE

0 - 3655' CEMENT 680sx Circ.

3035 - 3360' PERFS 2 SPF (84 HOLES)

3438 - 3515' PERFS 1 SPF (18 HOLES)

3530 - 3542' PERFS 4 SPF (52 HOLES)

3617 - 3622' PERFS 4 SPF (24 HOLES)

KB ELEV: 3335'

TD: 3655'

1650 FNL & 2310 FWL
SEC 24 , TWN 24 S, RANGE 36 E
ELEVATION: 3320 GL
COMPLETION DATE: 09-05-54
****
COMPLETION INTERVAL: 3617-3622 (QUEEN)
TRT: FRAC 3K gals OIL / 4.5K # sd. (3617-3622)
SWABBED 59 BO, 15 BW. SET CIBP @ 3592'. 10' CMT CAP.
PERF 3530-3542 (4 SPF, 52 HOLES).
TRT: ACID 500 gals; FRAC 6K gals OIL / 6K # sd. BP @ 3582.
IP: 500 BOPD, 802 MCFD, 0 BWPD (FL)
07-11-73 C/O FILL 3532-3582 (150' SCALE & FORM. FILL).
PERFED 3438-40,46-54,62-64,76-78 & 3511-15
(ALL 1 SPF, 18 HOLES). ACID (3530-42) w/ 1K gals
SET BP. ACID 3438-3515 w/ 2K gals.
10-21-74 C/O TO 3582. FRAC LM (3438-3542) w/ 40K gals X-L
GEL / 37K # 20/40 sd & 10K # 10/20 sd. (3 STAGES
MAX CONC. 1.5ppg; 500# RS USED AS BLOCKS).
TIGHT SPOT @ 3438'. RAN SWEDGE 3438-46.
05-19-87 C/O FILL & BP's TO 3655'. ACID LM 500 gals.
FRAC LM 10K gals X-L GEL / 22.5K # 20/40 sd.
(MAX. CONC. 5ppg).
06-10-87 C/O SAND 3640-3655. PERF JALMAT 3035,40,44,48,52,
3057,62,64,68,74,80,84,88,92,98,3102,20,26,37,
3150,56,68,78,90,96,3202,08,13,18,25,30,40,51,
3269,74,87,94,96,98,3356,58 & 3360 (ALL 2 SPF,
84 HOLES). ACID 5K gals. FRAC 40K gals X-L GEL/
75K # 12/20 sd (2 STAGES, BALL SEALERS AS BLOCK,
MAX CONC. 5ppg). C/O TO 3655'.
05-06-88 TAG FILL @ 3619'.
****

0 - 3590' 2.875" OD 6.40#/ft J-55 TBG

3560 - 3561' SEATING NIPPLE EST.

0 - 3655' 5.5" OD 14.00#/ft J-55 PROD CSG

TEXACO E & P INC.
COOPER JAL UNIT NO. 126
API# 3002509636

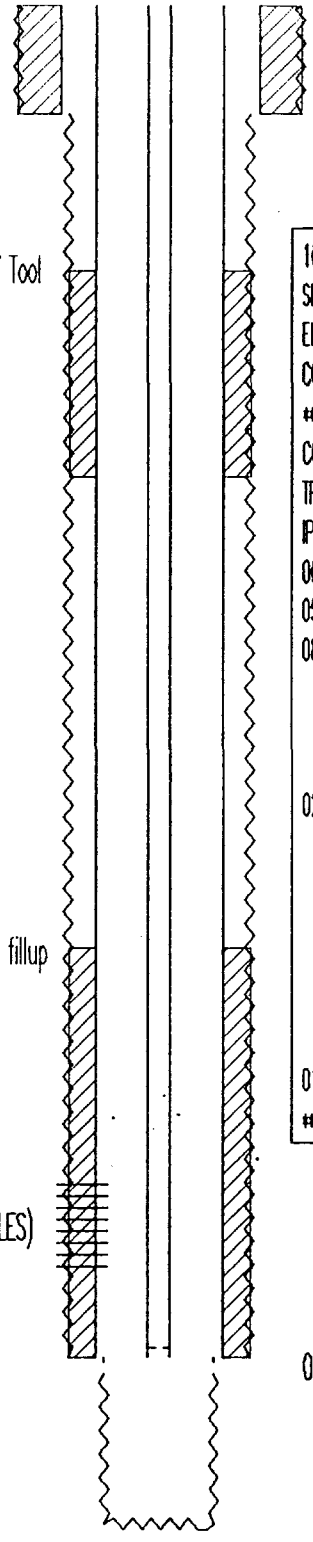

0 - 280' CEMENT 125sx Circ.

680 - 1206' CEMENT 100sx Thru DV Tool

2415 - 3470' CEMENT 200sx Calc. w/ 75% fillup

3022 - 3234' PERFS 2 SPF (60 HOLES)

KB ELEV: 3320'
TD: 3560'

0 - 280' 12.25 " OD HOLE

0 - 280' 8.625" OD 24.00#/ft J-55 SURF CSG

1650 FNL & 2310 FEL
SEC 24 , TWN 24 S, RANGE 36 E
ELEVATION: 3311 GL
COMPLETION DATE: 05-13-54
###
COMPLETION INTERVAL: 3470 - 3560 (7RVRS/QUEEN-OH)
TRT: FRAC 4K gals OIL / 6K # sd. (3470-3560)
IP: 480 BOPD, 672 MCFD, 0 BWPD (FL)
06-25-74 C/O FILL 3530-3560 (30' FILL).
05-25-75 C/O TO 3560'. ACID 4K gals (3 STAGES).
08-22-75 C/O TO 3560'. ACID 1.5K gals (DURING JOB, AFTER RS BLOCKS). FRAC 34K gals X-L GEL / 30K # 20/40 sd & 10K # 10/20 sd (3 STAGES, w/ RS BLOCKS, MAX CONC. 1.5 ppg). C/O TO 3560.
02-18-87 C/O LM OH 3470-3560 (90' FILL). SET BP @ 3394'. PERF JALMAT 3022,28,32,41,45,52,57,59,71,75,78, 3084,86,90,3102,06,12,29,35,51,58,67,90,3202,17, 3219,21,23,32 & 3234 (ALL 2 SPF, 60 HOLES). ACID JM (3022-3234) w/ 4K gals. FRAC JM w/ 33.6K gals X-L GEL / 50K # 12/20 sd. (2 EQUAL STAGES w/ BALLS AS BLOCK, MAX CONC. 5 ppg).
01-11-89 TAGGED FILL @ 3529'. DID NOT C/O.
###

280 - 3470' 7.875" OD HOLE

0 - 3466' 2.875" OD 6.40#/ft J-55 TBG

3443 - 3444' SEATING NIPPLE

0 - 3470' 5.5" OD 14.00#/ft J-55 PROD CSG

3470 - 3560' 4.75 " OD HOLE

TEXACO E & P INC.
COOPER JAL UNIT NO. 127
API# 3002509637

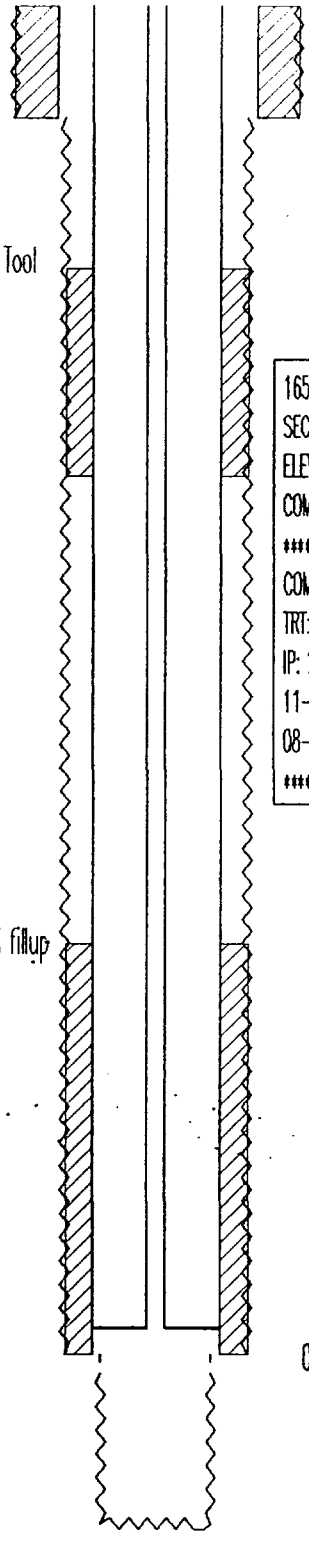

0 - 290' CEMENT 150sx Circ.

0 - 290' 12.25" OD HOLE

0 - 290' 8.625" OD 24.00#/ft J-55 SURF CSG

675 - 1205' CEMENT 100sx Thru DV Tool

1650 FNL & 990 FEL
SEC 24 , TWN 24 S, RANGE 36 E
ELEVATION: 3304 GL
COMPLETION DATE: 06-01-54
****
COMPLETION INTERVAL: 3460 - 3541 (7 RVRS/QUEEN-OH)
TRT: FRAC 4K gals OIL / 6K # sd (3460-3541)
IP: 248 BOPD, 185 MCFD, 0 BWPD (FL)
11-15-58 C/O 3535-3541 (6' FILL). PLACE WELL ON ROD PUMP.
08-11-71 CONVERTED TO INJECTION. C/O TO 3537'.
****

290 - 3460' 7.875" OD HOLE

2405 - 3460' CEMENT 200sx Calc. w/ 75% fillup

0 - 3392' 2.375" OD 4.70#/ft J-55 TBG CMT LINED

3392 - 3395' RETRV. PACKER BAKE AD-1

0 - 3460' 5.5" OD 14.00#/ft J-55 PROD CSG

3460 - 3541' 4.75 " OD HOLE

KB ELEV: 3312'
PBTD: 3537'
TD: 3541'

TEXACO E & P INC.
COOPER JAL UNIT NO. 128
API# 3002511151

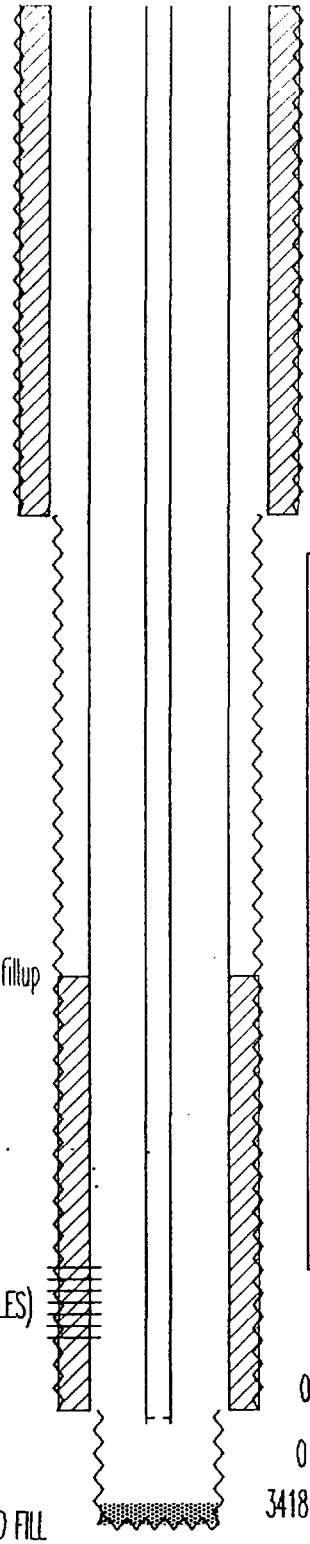

0 - 1230' CEMENT 400sx Circ.

0 - 1230' 11 " OD HOLE

0 - 1230' 8.625" OD 28.00#/ft J-55 SURF CSG

1650 FNL & 330 FWL
SEC 19 , TWN 24 S, RANGE 37 E
ELEVATION: 3294 GL
COMPLETION DATE: 07-27-54
***
COMPLETION INTERVAL: 3400 - 3600 (7 RVRS/QUEEN-OH)
TRT: NONE ; IP: 120 BOPD, 300 MCFD, 0 BWPD (FL)
06-07-74 C/O FILL 3438 - 3600
10-10-85 DEEPENED TO 3675'. JET WASHED 3400-3600.
ACID 2K gals; FRAC 32K gals / 82.5K #
12/20 sd (2 EQUAL STAGES!! MAX CONC. 7 ppg)
PERF JALMAT. 3023 - 3221 (2 SPF 52 HOLES)
ACID 2K gals; FRAC 29K gals / 50K #
12/20 sd (2 EQUAL STAGES!! MAX CONC. 5 ppg)
01-07-87 UPGRADE PMP EQUIP. TO 2-7/8" TBG & 2" PMP.
07-30-87 C/O FILL TO 3600'.
08-03-88 C/O FILL 3616-3626. ACID 3.2K gals
***

2345 - 3400' CEMENT 200sx Calc. w/ 75% fillup

3023 - 3221' PERFS 2 SPF (52 HOLES)

1230 - 3400' 7.875 " OD HOLE

0 - 3400' 5.5" OD 15.50#/ft J-55 PROD CSG

0 - 3432' 2.875" OD 6.40#/ft J-55 TBG

3418 - 3419' SEATING NIPPLE

3626 - 3675' SAND FILL

KB ELEV: 3304'
TD: 3675'

3400 - 3675' 4.75 " OD HOLE

TEXACO E & P INC.
COOPER JAL UNIT NO. 129
API# 3002511152

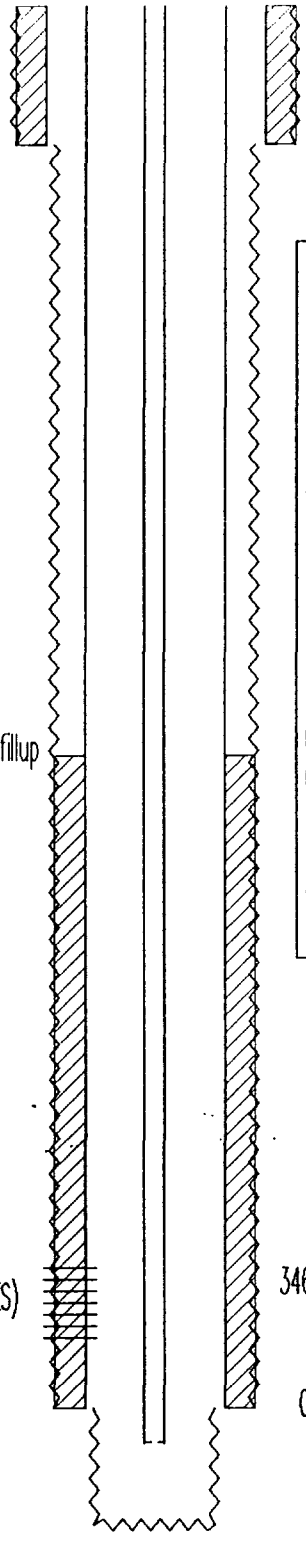

0 - 330' CEMENT 175sx Circ.

0 - 330' 11 " OD HOLE

0 - 330' 8.625" OD 28.00#/ft J-55 SURF CSG

1650 FNL & 1587 FWL
SEC 19 , TWN 24 S, RANGE 37 E
ELEVATION: 3306 GL
COMPLETION DATE: 09-11-54
***
COMPLETION INTERVAL: 3386 - 3535 (7 RVRS/QUEEN-OH)
TRT: FRAC 8K gals OIL / 10K # sd
IP: 60 BOPD, 210 MCFD, 0 BWPD (FL)
08-20-85 C/O FILL 3490 - 3535. DEEPENED TO 3670'.
ACID 2K gals; FRAC 20K gals / 80K # sd
(DESIGN. FRAC SCREENED OUT. NO RPT. OF
VOL. sd. PLACED)
09-20-85 C/O FILL 3475 - 3670.
09-25-85 PERF JALMAT 3018 - 3215 (2 SPF 44 HOLES)
ACID 1K gals; FRAC 29K gals / 50K # sd
(2 EQUAL STAGES)
03-15-91 INSTALLED NEW RODS.
***

1805 - 3386' CEMENT 300sx Calc. w/ 75% fillup

330 - 3386' 7.875 " OD HOLE

0 - 3470' 2.375" OD 4.70#/ft J-55 TBG

3468 - 3469' SEATING NIPPLE

3018 - 3215' PERFS 2 SPF (44 HOLES)

0 - 3386' 5.5" OD 14.00#/ft J-55 PROD CSG

3386 - 3670' 4.75 " OD HOLE

KB ELEV: 3320'
TD: 3670'

TEXACO E & P INC.
COOPER JAL UNIT NO. 130
API# 3002509643

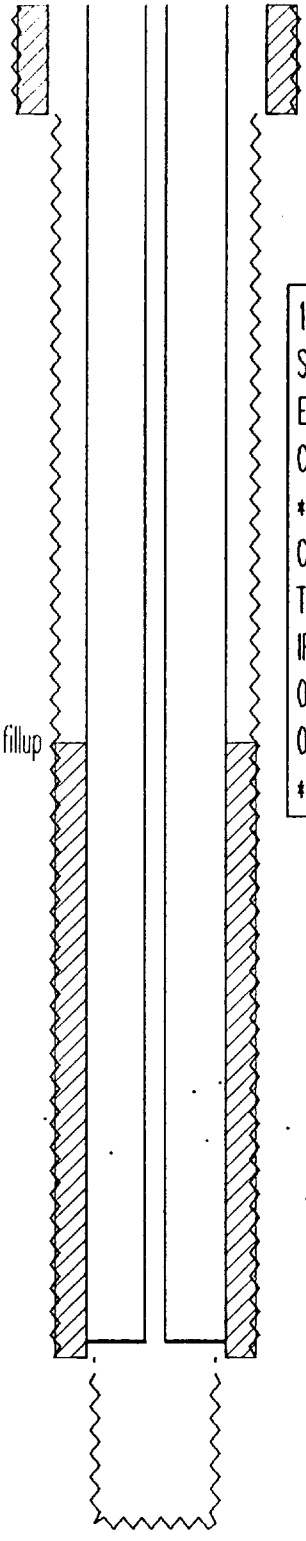

0 - 280' CEMENT 150sx Circ.

0 - 280' 11 " OD HOLE

0 - 280' 8.625" OD 28.00#/ft H-40 SURF CSG

1650 FSL & 1650 FWL
SEC 24 , TWN 24 S, RANGE 36 E
ELEVATION: 3329 KB
COMPLETION DATE: 04-22-54
****
COMPLETION INTERVAL: 3470 - 3550 (SEVEN RIVERS)
TRT: FRAC 4K GALS, 6K LBS SD. (3470 - 3550)
IP: 234 BOPD, 0 MCFD, 0 BWPD (FLOWING)
04-30-71 CONVERTED TO INJECTION
04-15-93 CO, SIDE JET & ACIDIZE W/ 4K GALS
****

1890 - 3470' CEMENT 300sx Calc w/ 75% fillup

280 - 3470' 7.875 " OD HOLE

0 - 3426' 2.375" OD 4.70#/ft J-55 TBG Flourolined

3426 - 3430' LATCH-IN PACKER

0 - 3470' 5.5" OD 14.00#/ft H-40 PROD CSG

3470 - 3550' 4.75 " OD HOLE

KB ELEV: 3320'
TD: 3550'

TEXACO E & P INC.
COOPER JAL UNIT NO. 132
API# 3002509639

0 - 283' CEMENT 124sx Circ.

0 - 283' 11 " OD HOLE

280 - 285' SQUEEZE PERFS HOLE IN CSG

0 - 283' 8.625" OD 24.00#/ft J-55 SURF CSG

150 - 300' CEMENT 200sx SQZD THRU HOLE (EST.)

685 - 1211' CEMENT 100sx Thru DV Tool

2310 FSL & 990 FEL
SEC 24 , TWN 24 S, RANGE 36 E
ELEVATION: 3307 GL
COMPLETION DATE: 05-12-54
###
COMPLETION INTERVAL: 3475 - 3555 (7 RVRS/QUEEN-OH)
TRT: FRAC 4K gals/ 0 # sd. (3475-3555)
BURST CSG @ 280'. SQZD w/ 200sx (3 JOBS). OK @ 875#.
TRT: FRAC 4K gals / 6K # sd. (3475-3555)
IP: 173 BOPD, 245 MCFD, 0 BWPD (FL)
04-11-76 ACID 1.5K gals. TIGHT SPOT IN CSG. @ 210'.
02-18-85 C/O FILL 3473-3555 (82' FILL). DEEPEN TO 3640'.
ACID OH (3475-3640) 4K gals IN 2 STAGES w/
500# RS BLOCK. FRAC 22K GALS X-L GEL /
56K # 12.20 sd. (1 STAGE; RAMP 1 to 6ppg).
03-11-87 C/O FILL TO 3640'.
04-21-87 C/O FILL TO 3628'.
04-15-88 TAG FILL @ 3628'.
###

2420 - 3475' CEMENT 200sx Calc w/ 75% fillup

283 - 3475' 7.875 " OD HOLE

0 - 3596' 2.375" OD 4.70#/ft J-55 TBG

3563 - 3564' SEATING NIPPLE

0 - 3475' 5.5" OD 14.00#/ft J-55 PROD CSG

3475 - 3640' 4.75 " OD HOLE

KB ELEV: 3315'

TD: 3640'

PREVIOUSLY NO. 310

TEXACO E & P INC.
COOPER JAL UNIT NO. 133/240
API# 3002511161

0 - 215' CEMENT 100sx Circ.

0 - 304' CEMENT 175sx Circ.

225 - 3320' CEMENT 1000sx TOC by Temp. Survey

250 - 340' SQUEEZE PERFS 550sx SQZD thru CSG Holes (2X)

0 - 304' 11 " OD HOLE

215 - 215' SQUEEZE PERFS 2 Sqz Holes

0 - 304' 8.625" OD 32.00#/ft J-55 SURF CSG

1980 FSL & 1916.6 FWL
SEC 19 , TWN 24 S, RANGE 37 E
ELEVATION: 3286 GL
COMPLETION DATE: 10-10-49
****
COMPLETION INTERVAL: 3320 - 3680 (7 RVRS/QUEEN-OH)
PERF : 3053 - 3110 (YATES)
TRT : ACID 1K gals
IP: 52 BOPD, 55.7 MCFD, 0 BWPD (FL)
07-09-53 FRAC 6K gals OIL / 4.5K # sd.
07-26-54 COMPLETE AS DUAL. ACID OH 1K gals;
FRAC OH 10K gals OIL / 10K # sd.
08-05-55 SQZD JM 3053-3110. FRAC OH 20K gals
OIL / 20K # sd.
PERF JM 3182-3220 & 3245-3278.
FRAC JM 20K gals OIL / 20K # sd.
06-05-74 CONVERTED TO DUAL INJECTOR.
C/O FILL TO 3525'.
PERF 3060-3155' 1SPF (25 HOLES)
ACID 2.5K gals
04-22-86 SQZD CSG LEAK 250-340 w/ 500sx.
ACID JM 3060-3278 5K gals
PERF 2 HOLES @ 215' CIRC. CMT
RE-SQZD CSG LEAK 270-330 w/ 50sx.
****

304 - 3320' 7.875 " OD HOLE

2925 - 2928' RETRV. PACKER BAKER MODEL B

2955 - 2956' PORTED NIPPLE PERFED (FLOW REG.)

0 - 3259' 2.375" OD 4.70#/ft J-55 TBG IPC

3255 - 3256' PORTED NIPPLE PERFED (FLOW REG.)

3259 - 3262' RETRV. PACKER BAKER LOC-SET

3060 - 3155' PERFS 1 SPF (25 Holes)

3182 - 3220' PERFS 1 SPF

3245 - 3278' PERFS 1 SPF

3053 - 3110' SQUEEZE PERFS 1 SPF

0 - 3320' 5.5" OD 15.50#/ft J-55 PROD CSG

3320 - 3680' 4.75" OD HOLE

KB ELEV: 3295'

TD: 3680'

TEXACO E & P INC.
COOPER JAL UNIT NO. 134
API# 3002509644

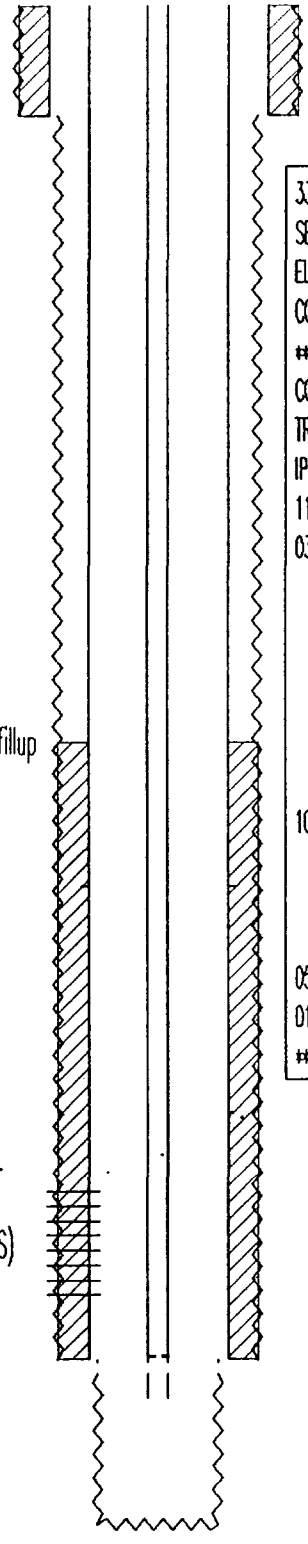

0 - 280' CEMENT 150sx Circ.

1880 - 3462' CEMENT 300sx Calc. w/ 75% fillup

3031 - 3295' PERFS 1 SPF (30 HOLES)

KB ELEV: 3321'
TD: 3570'

0 - 280' 11 " OD HOLE

0 - 280' 8.625" OD 28.00#/ft J-55 SURF CSG

330 FSL & 1650 FWL
SEC 24 , TWN 24 S, RANGE 36 E
ELEVATION: 3310 GL
COMPLETION DATE: 07-18-54
****
COMPLETION INTERVAL: 3462 - 3570 (7 RVRS/QUEEN-OH)
TRT: FRAC 5K gals OIL / 7.5K # sd. (3462-3570)
IP: 237 BOPD, 320 MCFD, 0 BWPD (FL)
11-07-75 C/O TO 3570'. ACID 1.5K gals.
03-15-79 NO FILL LOGGED WELL. PERF JALMAT 3031,34,37,40, 3042,69,71,74,78,81,84,87,3107,09,11,13,15,35, 3139,42,53,55,57,3223,25,27,91,93 & 3295 (ALL 1 SPF, .32 EHD, 30 HOLES). SET BP @ 3351'. ACID 3K gals; FRAC 49K gals X-L GEL / 36K # 20/40 sd & 18K # 10/20 sd (3 EQ. STAGES w/ RS BLOCKS, MAX CONC. 2 ppg). C/O TO 3570'.
10-11-82 C/O LM OH 3469-3570 (101' FILL). FRAC LM w/ 13K gals X-L GEL / 6K gals CO2 / 23.5K # 20/40 SD & 13.5K # 10/20 sd (1 STAGE!, MAX CONC. 3ppg, MAX RATE 9.5 BPM). C/O LM OH TO 3570'.
05-20-87 TAG FILL @ 3521' (49' FILL). DID NOT C/O.
01-21-89 C/O FILL 3521-3570' (49' FILL).
****

280 - 3465' 7.875 " OD HOLE

0 - 3486' 2.375" OD 4.70#/ft J-55 TBG
3454 - 3455' SEATING NIPPLE

0 - 2250' 5.5" OD 14.00#/ft J-55 PROD CSG UNKNOWN WT.
2250 - 3462' 5.5" OD 17.00#/ft J-55 PROD CSG "TIGHT CSG" PROB. 17#

3465 - 3570' 4.75 " OD HOLE

TEXACO E & P INC.
COOPER JAL UNIT NO. 135
API# 3002509641

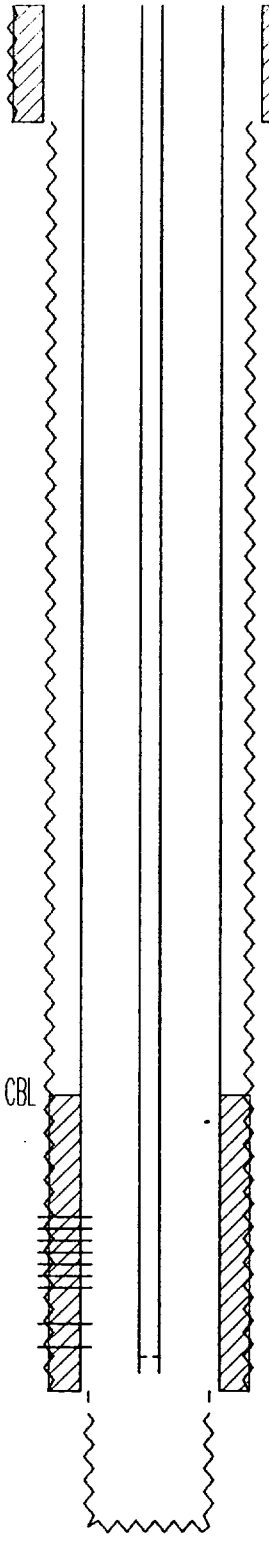

0 - 290' CEMENT 125sx Circ.

0 - 290' 11 " OD HOLE

0 - 290' 8.625" OD 28.00#/ft J-55 SURF CSG

990 FSL & 1980 FEL
SEC 24 , TWN 24 S, RANGE 36 E
ELEVATION: 3312 GL
COMPLETION DATE: 03-01-54
***
COMPLETION INTERVAL: 3472 - 3575 (7 RVRS/QUEEN-OH)
IP: 51 BOPD, 72 MCFD, 0 BWPD (FL)
09-09-54 RE-FRAC w/ 4K gals OIL / 4K # sd.
06-15-73 PLACED WELL ON ROD PUMP.
10-08-74 C/O FILL TO 3575'. JETWASH OH 3472-3575'.
02-11-75 TAGED FOR FILL. NONE PRESENT.
08-29-86 C/O OH 3480-3575 (95' FILL). DEEPENED TO 3650'. LOGGED WELL. TOC @ 2728'. ACID OH 3472-3650 w/ 2K gals; FRAC OH 34K gals X-L GEL / 80K # 12/20 sd. (2 EQ. STAGES! w/ RS BLOCK, MAX CONC. 7ppg). C/O TO 3650'.
09-30-86 PERF JALMAT 3019,22,24,26,28,30,32,34,43,45,47, 3049,56,59,62,70,72,74,76,82,93,97,3102,06,09, 3116,27,30,38,45,51,56,65,70,76,83,90,94,3201, 3203,10 (ALL 2 SPF, 84 HOLES) & 3285-3302,3358-62 (ALL 1 SPF, 21 HOLES). ACID JM 2K gals; FRAC 30K gals X-L GEL / 50K # 12/20 sd (2 EQ. STAGES w/ RS BLOCK, MAX CONC. 7 ppg). C/O TO 3650. DHC.
02-13-87 C/O OH FILL 3472-3524' (52' FILL). PBTD 3524'.
09-09-87 C/O OH FILL 3495-3524' (29' FILL). PBTD 3524'.
07-22-88 C/O OH FILL 3475-3524'.(49' FILL). PBTD 3524'.
***

2728 - 3472' CEMENT 400sx TOC by CBL

3019 - 3212' PERFS 2 SPF (84 HOLES)

3285 - 3302' PERFS 1 SPF (17 HOLES)

3358 - 3362' PERFS 1 SPF (4 HOLES)

290 - 3472' 7.875 " OD HOLE

0 - 3427' 2.375" OD 4.70#/ft J-55 TBG

3386 - 3387' SEATING NIPPLE

0 - 3472' 5.5" OD 14.00#/ft J-55 PROD CSG

3472 - 3650' 4.75 " OD HOLE

KB ELEV: 3318'

TD: 3650'

TEXACO E & P INC.
COOPER JAL UNIT NO. 136
API# 3002509640

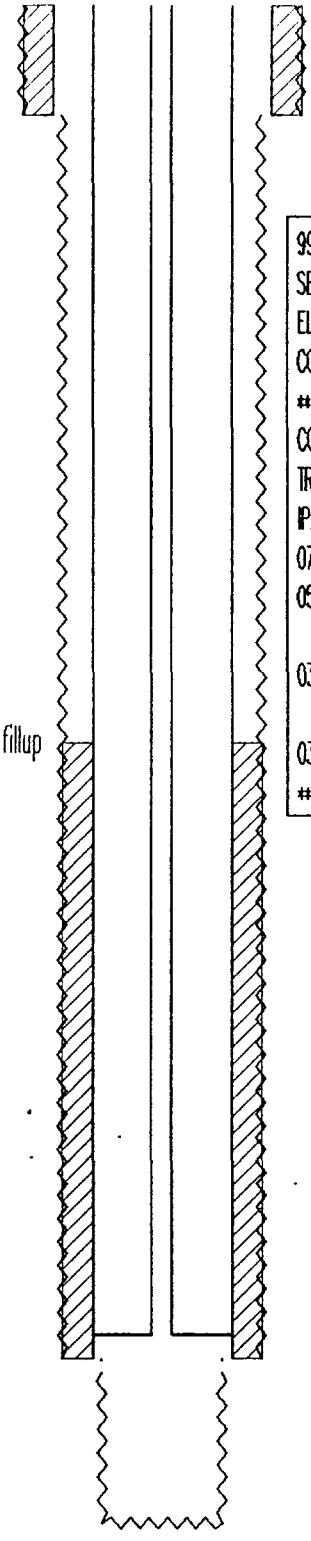

0 - 280' CEMENT 150sx Circ.

0 - 280' 11 " OD HOLE

0 - 280' 8.625" OD 28.00#/ft J-55 SURF CSG

990 FSL & 990 FEL
SEC 24 , TWN 24 S, RANGE 36 E
ELEVATION: 3302 GL
COMPLETION DATE: 05-15-54
###
COMPLETION INTERVAL: 3465 - 3540 (7 RVRS/QUEEN-OH)
TRT: FRAC 4K gals OIL / 6K # sd. (3465-3540)
IP: 137 BOPD, 172 MCFD, 0 BWPD (FL)
07-11-56 RE-FRAC OH 15K gals OIL / 30K # sd.
05-17-71 CONVERTED TO INJECTION. C/O FILL 3513-3537
(27' FILL). INSTALLED INJ. TBG. PLACED ON INJ.
03-23-79 ATTEMPTED TO TAG FILL w/ SB. COULD NOT GET
BELOW 3183'. PKR @ 3398'.
03-28-79 TAG FILL @ 3497' (40'FILL). DID NOT C/O.
###

1885 - 3465' CEMENT 300sx Calc. w/ 75% fillup

280 - 3465' 7.875 " OD HOLE

0 - 3400' 2.375" OD 4.70#/ft J-55.TBG CMT. LINED

3400 - 3403' RETRV. PACKER BAKER AD-1

0 - 3465' 5.5" OD 14.00#/ft J-55 PROD CSG

3465 - 3540' 4.75 " OD HOLE

KB ELEV: 3308'
TD: 3540'

TEXACO E & P INC.
COOPER JAL UNIT NO. 137
API# 3002509660

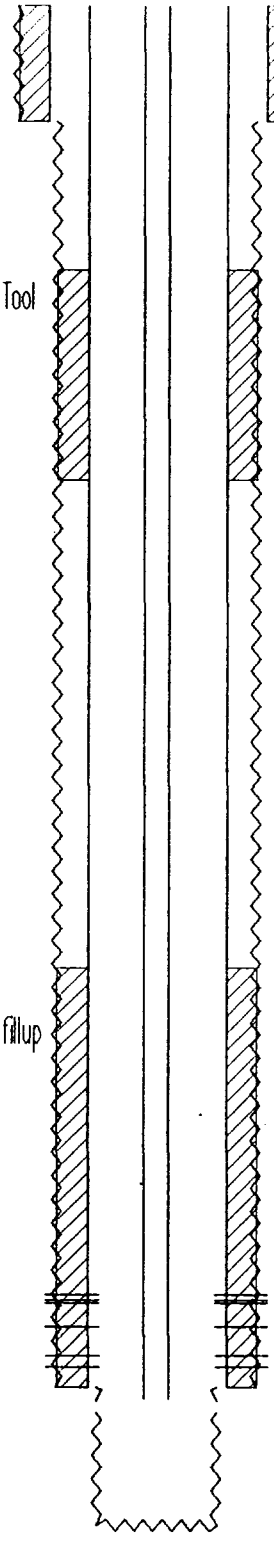

0 - 289' CEMENT 150sx Circ.

660 - 1186' CEMENT 100sx Thru DV Tool

2410 - 3463' CEMENT 200sx Calc. w/ 75% fillup

3219 - 3228' PERFS 6 SPF (60 HOLES)
3233 - 3242' PERFS 6 SPF (60 HOLES)
3246 - 3251' PERFS 6 SPF (36 HOLES)
3296 - 3310' PERFS 6 SPF (90 HOLES)
3366 - 3382' PERFS 6 SPF (102 HOLES)
3396 - 3412' PERFS 6 SPF (102 HOLES)

KB ELEV: 3314'
TD: 3560'

0 - 289' 11 " OD HOLE

0 - 289' 8.625" OD 28.00#/ft J-55 SURF CSG

990 FNL & 330 FWL
SEC 25 , TWN 24 S, RANGE 36 E
ELEVATION: 3305 GL
COMPLETION DATE: 06-29-54
****
COMPLETION INTERVAL: 3463 - 3560 (7 RVRS/QUEEN-OH)
TRT: FRAC 5K gals OIL / 7.5K # sd. (3463-3560)
IP: 69 BOPD, 86 MCFD, 0 BWPD (FL)
09-28-54 PERF 7RVRS 3296-3414, 4 INT.- 6 SPF. (BP @ 3427')
FRAC 4K gals OIL / 4K # sd. (2 EQ. STAGES).
10-12-54 RE-PERFED 3366-3382, 6 SPF.
PERFED 3219-3252, 3 INT.-ALL 6 SPF.
FRAC (3219-52) 4K gals OIL / 5K # sd.
07-14-71 CONVERTED TO INJECTION. C/O TO TD (3560').
SET PACKER @ 3447'. (INJ. INTO OH ONLY.)
11-02-71 RE-SET INJ. PACKER ABOVE PERFED INT.
(PERFS WERE COMMUNICATED)
03-01-73 SI DUE TO DIRECT COMMUNICATION w/ #138.
07-31-76 CONVERTED TO PRODUCTION. INSTALLED 114D PU.
FILL 3544-3560'. NO C/O.
10-08-76 RAN PROD. SURVEY. ALL FLUID FROM BELOW 3463'.
100% WTR.
10-26-76 RODS FAILED, PULLED & LAYED DOWN ROD STRING. SI.
04-01-93 CURRENT STATUS : SI - OIL
****

289 - 3463' 7.875 " OD HOLE

0 - 3494' 2.875" OD 6.40#/ft J-55 TBG LAST RECORD (10/76)

0 - 3463' 5.5" OD 15.50#/ft J-55 PROD CSG

3463 - 3560' 4.75 " OD HOLE

TEXACO E & P INC.
COOPER JAL UNIT NO. 138
API# 3002509657

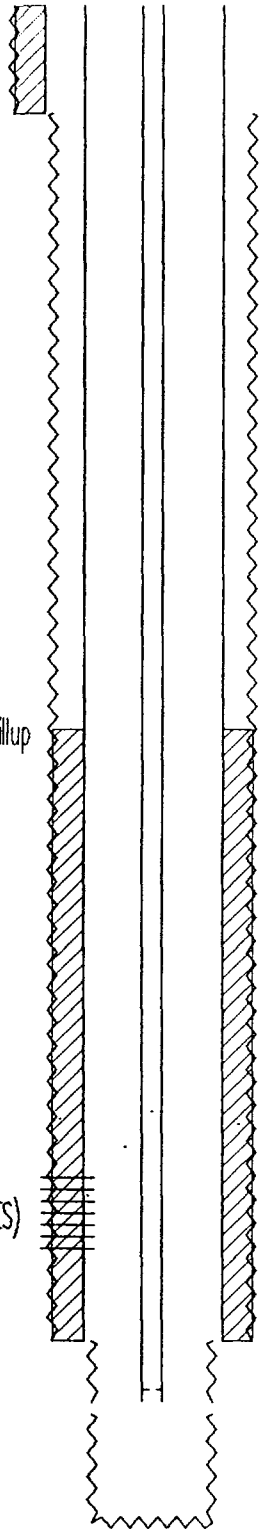

0 - 280' CEMENT 150sx Circ.

0 - 280' 11 " OD HOLE

0 - 280' 8.625" OD 28.00#/ft J-55 SURF CSG

840 FNL & 1650 FWL
SEC 25 , TWN 24 S, RANGE 36 E
ELEVATION: 3300 GL
COMPLETION DATE: 06-29-54
****
COMPLETION INTERVAL: 3450 - 3550 (7 RVRS/QUEEN-OH)
TRT: FRAC 5K gals OIL / 8K # sd. (3450 - 3550)
IP: 248 BOPD, 305 MCFD, 0 BWPD (FL)
05-01-63 SL WOULD NOT FLOW.
07-16-73 C/O FILL TO 3550'.
03-06-74 INSTALLED LARGER 228D PU.
09-03-85 DEEPENED TO 3635'. ACID OH 2K gals;
FRAC OH 11.1K gals / 23.75K # 12/20 sd.
(SCREENED OUT @ 5 ppg) C/O TO 3635'.
RE-FRAC OH 10K gals/45K # 12/20 (MAX CONC. 7ppg)
09-27-85 PERF JALMAT 3022-3213 (2 SPF 36 INT. 72 HOLES)
ACID (JM) 2K gals; FRAC (JM) 33K gals /
62.5K # 12/20 (MAX CONC. 5ppg)
09-01-87 C/O FILL 3545 - 3635'.
02-29-88 TAGGED FILL @ 3634'.
****

1870 - 3450' CEMENT 300sx Calc. w/ 75% fillup

280 - 3450' 7.875 " OD HOLE

0 - 3609' 2.375" OD 4.70#/ft J-55 TBG

3022 - 3213' PERFS 2 SPF (36 INT. 72 HOLES)

3578 - 3579' SEATING NIPPLE

0 - 3450' 5.5" OD 15.50#/ft J-55 PROD CSG

3450 - 3635' 4.75 " OD HOLE

KB ELEV: 3310'
TD: 3635'

TEXACO E & P INC.
COOPER JAL UNIT NO. 139
API# 3002509661

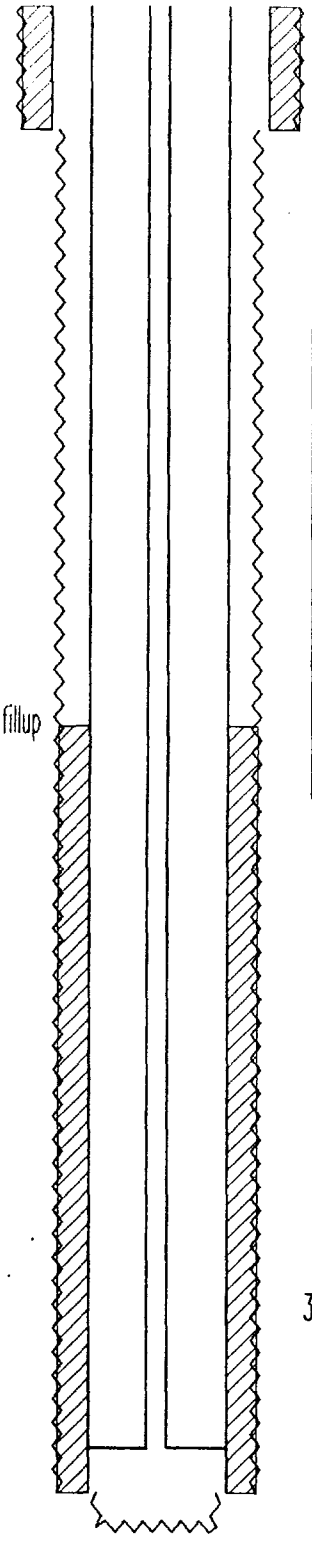

0 - 286' CEMENT 150sx Circ.

0 - 286' 11 " OD HOLE

0 - 286' 8.625" OD 24.00#/ft H-40 SURF CSG

330 FNL & 2310 FEL
SEC 25 , TWN 24 S, RANGE 36 E
ELEVATION: 3314 KB
COMPLETION DATE: 05-26-54
****
COMPLETION INTERVAL: 3465 - 3545 (QUEEN)
TRT: FRAC 4000 GALS 0 LBS (3460 - 3565)
IP: 341 BOPD, 0 MCFD, 0 BWPD (FLOWING)
05-18-71 CONVERTED TO INJECTION
08-12-88 CO,SIDE JET & ACIDIZE W/ 2K GALS
03-29-93 CO,SIDE JET & ACIDIZE W/ 4K GALS
****

1675 - 3465' CEMENT 300sx Calc. w/ 75% fillup

286 - 3465' 7.875 " OD HOLE

0 - 3360' 2.375" OD 4.70#/ft J-55 TBG Flourolined

3360 - 3364' LATCH-IN PACKER

0 - 3465' 5.5" OD 14.00#/ft H-40 PROD CSG

3465 - 3545' 4.75 " OD HOLE

KB ELEV: 3314'

TD: 3545'

TEXACO E & P INC.
COOPER JAL UNIT NO. 140
API# 3002509662

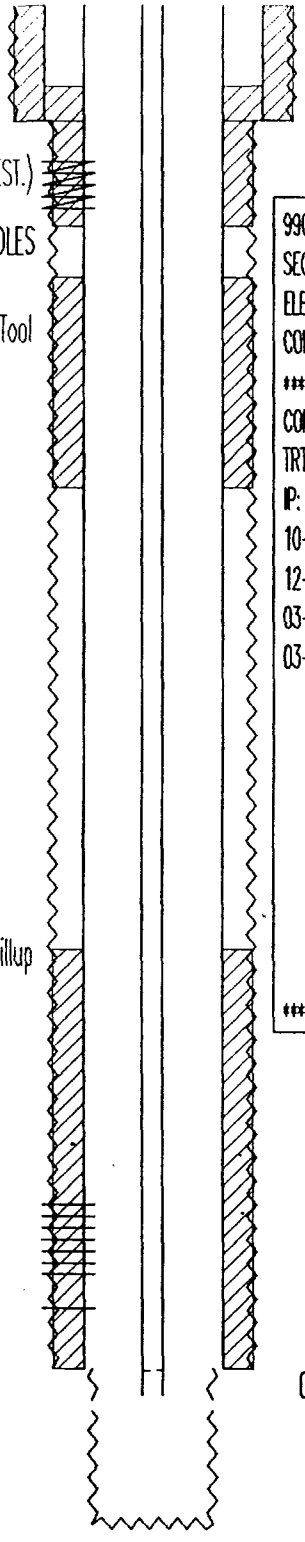

0 - 286' CEMENT 150sx Circ.

200 - 550' CEMENT 200sx SQZD Thru Csg Holes (EST.)

384 - 508' SQUEEZE PERFS SQZD 5-1/2" CSG HOLES

680 - 1207' CEMENT 100sx Thru DV Tool

2365 - 3420' CEMENT 200sx Calc. w/ 75% fillup

2989 - 3183' PERFS 2 SPF (82 HOLES)

3250 - 3269' PERFS 2 SPF (14 HOLES)

KB ELEV: 3296'

TD: 3615'

0 - 286' 11 " OD HOLE

0 - 286' 8.625" OD 24.00#/ft J-55 SURF CSG

990 FNL & 990 FEL
SEC 25 , TWN 24 S, RANGE 36 E
ELEVATION: 3290 GL
COMPLETION DATE: 06-12-54
****
COMPLETION INTERVAL: 3420 - 3520 (7 RVRS/QUEEN-OH)
TRT : FRAC 4K gals OIL / 6K # sd.
IP: 386 BOPD, 926 MCFD, 0 BWPD (FL), SIBHP = 836 psig.
10-20-56 C/O FILL 3503-3520'.
12-13-73 INSTALLED LARGER 1140 PU.
03-27-74 INSTALLED LARGER 2280 PU.
03-11-87 DEEPENED TO 3615'. ACID OH 5K gals;
FRAC (LM-OH) 37.8K gals / 82K # 12/20
(IN 2 EQUAL STAGES)
PERF JM 2989-3183 & 3250-3269' (2SPF - 96 HOLES)
A/ (JM) 4.5K gals; FRAC (JM) 33.8K gals /
75.6K # 12/20 (MAX CONC. 6ppg - BOTH FRACS)
CMT SQZD HOLES IN 5-1/2" CSG 384-508'. DID NOT
HOLD. VERBAL OK - NMOCD!!
DHC'd LANGLIE MATTIX & JALMAT
****

286 - 3420' 7.875 " OD HOLE

0 - 3488' 2.375" OD 4.70#/ft J-55 TBG

3426 - 3427' SEATING NIPPLE

0 - 3420' 5.5" OD 14.00#/ft J-55 PROD CSG

3420 - 3615' 4.75 " OD HOLE

TEXACO E & P INC.
COOPER JAL UNIT NO. 141
API# 3002511292

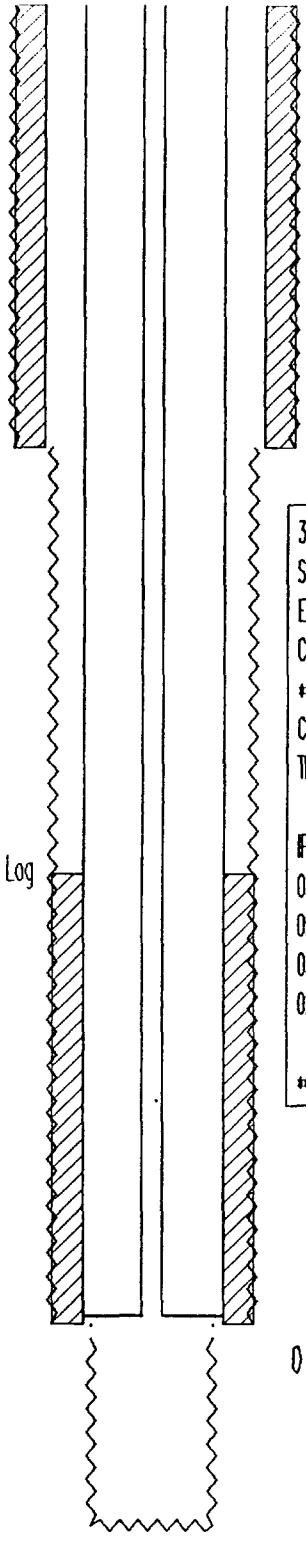

0 - 1140' CEMENT 700sx Circ.

0 - 1140' 11 " OD HOLE

0 - 1140' 8.625" OD 24.00#/ft J-55 SURF CSG

330 FNL & 330 FWL
SEC 30 , TWN 24 S, RANGE 37 E
ELEVATION: 3279 GL
COMPLETION DATE: 09-09-55
###
COMPLETION INTERVAL: 3410 - 3535 (7 RVRS/QUEEN-OH)
TRT: ACID 500 gals MUD ACID
FRAC 10K gals OIL / 10K # sd.
IP: 141 BOPD, 133.5 MCFD, 0 BWPD (FL)
08-18-71 CONVERTED TO INJECTION.
09-28-74 REPLACED 1 BAD JNT. TBG.
03-30-77 REPLACED 1 BAD JNT. TBG.
02-06-93 C/O FILL 3416-3535'. ACID 5K gals 15%
w/ 3% NS; 3 STAGES - 500 # ROCK SALT BLOCKS.
###

2240 - 3410' CEMENT 400sx TOC by Temp. Log

1140 - 3410' 7.875 " OD HOLE

0 - 3386' 2.375" OD 4.70#/ft J-55 TBG CMT LINED

3386 - 3389' RETRV. PACKER BAKER AD-1

0 - 3410' 5.5" OD 14.00#/ft J-55 PROD CSG

3410 - 3535' 4.75 " OD HOLE

KB ELEV: 3292'
TD: 3535'

TEXACO E & P INC.
COOPER JAL UNIT NO. 143
API# 3002509658

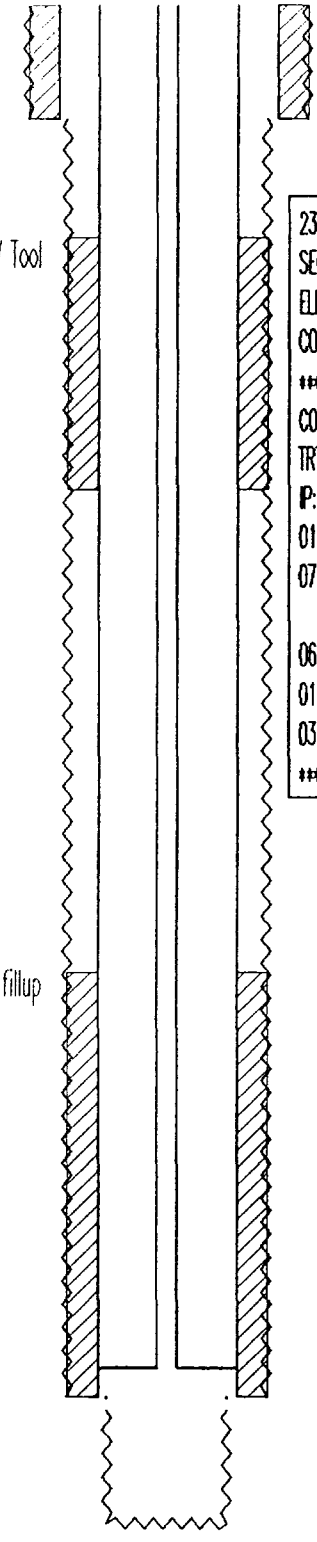

0 - 280' CEMENT 150sx Circ.

575 - 1199' CEMENT 100sx Thru DV Tool

2395 - 3450' CEMENT 200sx Calc. w/ 75% fillup

0 - 280' 11 " OD HOLE

0 - 280' 8.625" OD 24.00#/ft H-40 SURF CSG

2310 FNL & 1650 FWL
SEC 25 , TWN 24 S, RANGE 36 E
ELEVATION: 3299 GL
COMPLETION DATE: 07-06-54
****
COMPLETION INTERVAL: 3450 - 3550 (7 RVRS/QUEEN-OH)
TRT: FRAC 6K gals OIL / 9K # sd. (3450 - 3550)
IP: 22 BOPD, 147 MCFD, 0 BWPD (FL)
01-01-58 SI - WOULD NOT FLOW.
07-14-71 CONVERTED TO INJECTION. C/O FILL 3532-3544'
FLUID LEVEL 500' FROM SURFACE.
06-06-73 INJECTION LOG RUN. FILL @ 3548'.
01-26-77 REPLACED SEVERAL BAD JTS. TBG.
03-23-79 TAGGED FILL @ 3536' (12').
****

280 - 3450' 7.875 " OD HOLE

0 - 3378' 2.375" OD 4.70#/ft J-55 TBG CMT LINED

3378 - 3381' RETRV. PACKER BAKER AD-1

0 - 3450' 5.5" OD 14.00#/ft H-40 PROD CSG

3450 - 3550' 4.75 " OD HOLE

KB ELEV: 3309'

TD: 3550'

TEXACO E & P INC.
COOPER JAL UNIT NO. 144
API# 3002509663

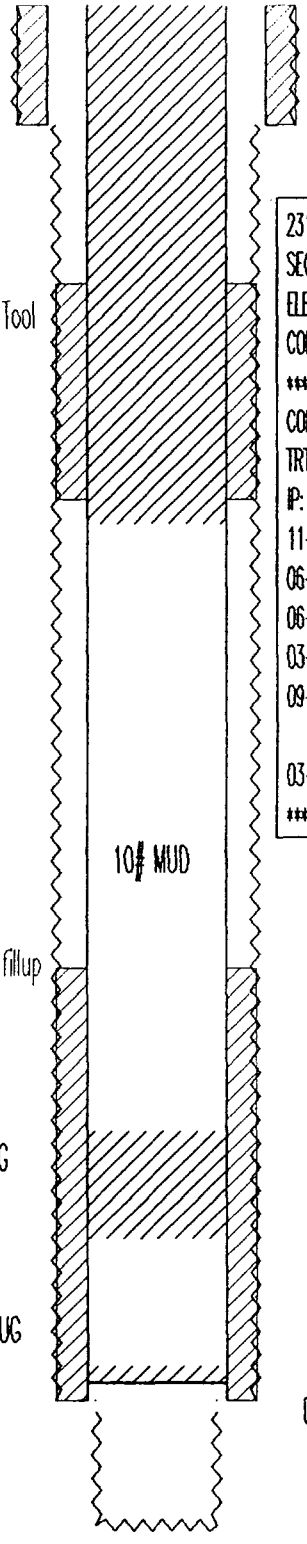

0 - 286' CEMENT 225sx Circ.

0 - 286' 11 " OD HOLE

0 - 286' 8.625" OD 24.00#/ft H-40 SURF CSG

0 - 1255' CEMENT PLUG

670 - 1196' CEMENT 100sx Thru DV Tool

2310 FNL & 990 FEL
SEC 25 , TWN 24 S, RANGE 36 E
ELEVATION: 3276' GL
COMPLETION DATE: 06-29-54
****
COMPLETION INTERVAL: 3389 - 3490 (7 RVRS/QUEEN-OH)
TRT: FRAC 4K gals OIL / 6K # sd. (3389 - 3490)
IP: 77 BOPD, 125 MCFD, 0 BWPD (FL)
11-19-57 C/O FILL 3469-3490'.
06-18-71 CONVERTED TO INJECTION. C/O FILL 3474-3490'.
06-05-73 RAN INJ. LOG. FILL @ 3483' (7').
03-23-29 C/O BAD TBG. TAGGED FILL @ 3408' (75').
09-10-85 FAILED NMOCD MIT. ATTEMPTED TO REPAIR CSG LEAKS
ALL WERE UNSUCCESSFUL
03-15-87 P&A'd WELL
****

10# MUD

2335 - 3389' CEMENT 200sx Calc w/ 75% fillup

286 - 3389' 7.875 " OD HOLE

2730 - 2990' CEMENT PLUG

3305 - 3345' CEMENT PLUG

3345 - 3348' CIBP

0 - 3389' 5.5" OD 14.00#/ft J-55 PROD CSG

3389 - 3490' 4.75 " OD HOLE

KB ELEV: 3288'

TD: 3490'

TEXACO E & P INC.
COOPER JAL UNIT NO. 145(302)
API# 3002511136

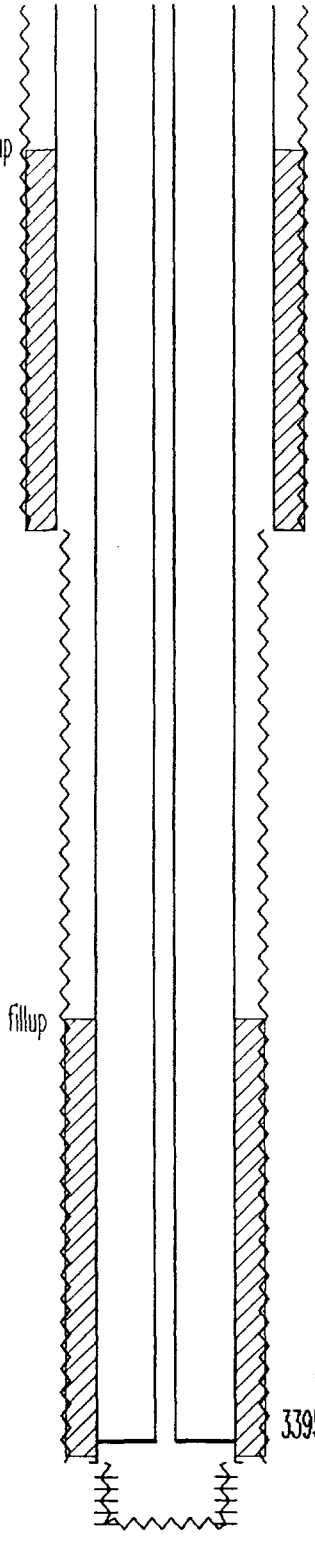

340 - 1238' CEMENT 250sx Calc. w/ 75% fillup

0 - 1238' 11 " OD HOLE

0 - 1238' 8.625" OD 40.00#/ft J-55 SURF CSG

1980 FNL & 1980 FEL
SEC 18 , TWN 24 S, RANGE 37 E
ELEVATION: 3293 GL
COMPLETION DATE: 03-17-53
****
COMPLETION INTERVAL: 3447 - 3591 (QUEEN-OH)
TRT: 250 QTS. NITRO 3455 - 3585
IP: 61 BOPD, 121.6 MCFD, 0 BWPD (FLOWING)
02-17-53 PB TO YATES; PERF 2948 - 3048
ACID 5K gals
07-23-71 CONV. TO INJ.
C/O TO TD (3591')
09-12-87 C/O & ACID 3K gals; INSTALL
NEW CMT LINED TBG.
****

2395 - 3433' CEMENT 200sx Calc. w/ 75% fillup

1238 - 3447' 7.875 " OD HOLE

0 - 3395' 2.375" OD 4.70#/ft J-55 TBG CMT. LINED

3395 - 3399' LATCH-IN PACKER BAKER AD-1

0 - 3447' 5.5" OD 14.00#/ft J-55 PROD CSG

3455 - 3685' PERFS 250 Qts. NITRO

3447 - 3591' 4.75 " OD HOLE

KB ELEV: 3315'
TD: 3591'

TEXACO E & P INC.
COOPER JAL UNIT NO. 146/233
API# 3002509560

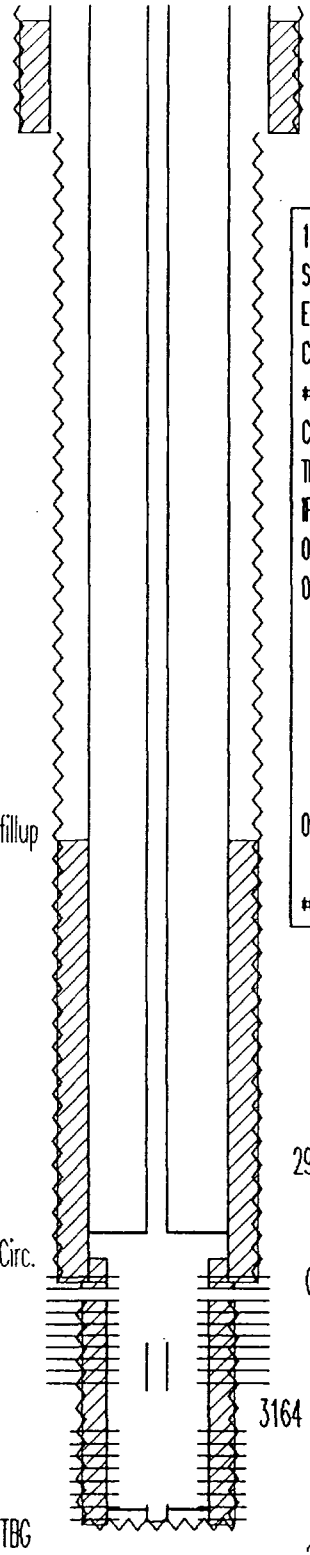

35 - 300' CEMENT 75sx Calc. w/ 75% fillup

0 - 300' 11 " OD HOLE

0 - 300' 8.625" OD 28.00#/ft J-55 SURF CSG

1650 FSL & 990 FEL
SEC 13 , TWN 24 S, RANGE 36 E
ELEVATION: 3316 GL
COMPLETION DATE: 06-30-50
###
COMPLETION INTERVAL: 3034 - 3235 (TATES/7 RVRS-OH)
TRT : ACID 1000 gals
IP: 54 BOPD, 61 MCFD, 0 BWPD (FL)
02-25-71 305 MCFPD; FTP = 121 psig
09-21-71 DEEPENED & CONV. TO DUAL INJECTOR
DRILLED FROM 3235 to 3642. UNDER-
REAMED HOLE FROM 4-3/4" TO 6".
INSTALLED 4" LINER
PERF 3008'-3268'(JM); PERF 3394'-3628' (LM)
ACID 5.36K gals 20% HCl.
09-28-87 ATTEMPTED TO PULL DUAL INJ EQUIP., C/O & ACID
UNABLE TO FISH TBG. RE-RAN PKR & TBG.
###

1980 - 3034' CEMENT 200sx Calc w/ 75% fillup

300 - 3034' 7.875 " OD HOLE

0 - 2915' 2.375" OD 4.70#/ft J-55 TBG CMT LINED

2915 - 2918' LATCH-IN PACKER BAKER MODEL B

2980 - 3642' CEMENT 50sx Circ.

0 - 3034' 5.5" OD 14.00#/ft J-55 PROD CSG

3008 - 3268' PERFS 1 (1/2")SPF (80 HOLES)

3034 - 3642' 6" OD HOLE UNDER-REAMED

3164 - 3288' 2.375" OD 4.70#/ft J-55 TBG CMT LINED - STUCK FISH

3394 - 3628' PERFS 1 (1/2") SPF; (48 HOLES)

3600 - 3603' PACKER BAKER AD-1

3590 - 3633' 2.375" OD 4.70#/ft J-55 TBG

3633 - 3635' BULLPLUG

KB ELEV: 3326'

TD: 3642'

2980 - 3642' 4" OD 9.11#/ft FJ-40 LINER

TEXACO E & P INC.
COOPER JAL UNIT NO. 147/207
API# 3002511166

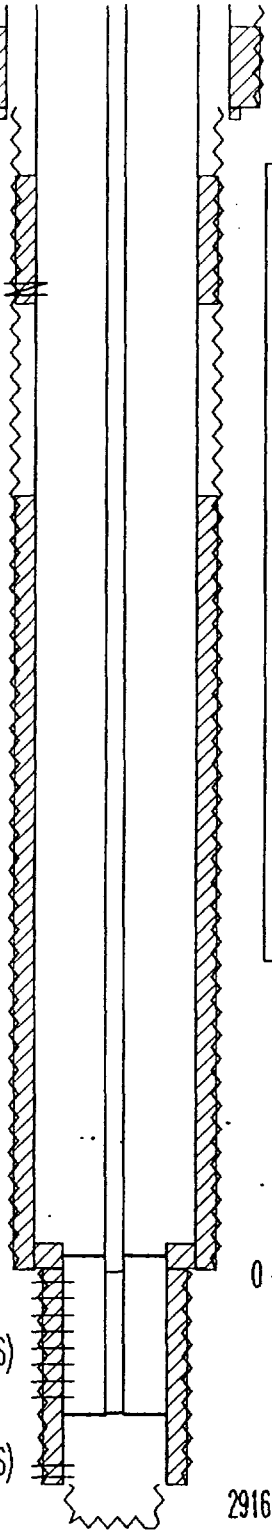

50 - 267' CEMENT 75sx Calc. w/ 75% fillup

400 - 700' CEMENT 500sx SQZD CSG LEAK (EST.)

649 - 680' SQUEEZE PERFS CSG HOLES

1150 - 2975' CEMENT 300sx Calc. w/ 75% fillup

2916 - 3485' CEMENT 280sx Circ.

3006 - 3280' PERFS 1 SPF (76 HOLES)

3414 - 3468' PERFS 1 SPF (33 HOLES)

KB ELEV: 3309'

TD: 3576'

0 - 239' 12.25 " OD HOLE

0 - 239' 9.625" OD 24.00#/ft J-55 SURF CSG

2310 FNL & 330 FWL
SEC 19 , TWN 24 S, RANGE 37 E
ELEVATION: 3299 GL
COMPLETION DATE: 04-18-50
###
COMPLETION INTERVAL: 2974 - 3167 (YATES-OH)
IP: 56 BOPD, 200 MCFD, 0 BWPD (FL)
08-29-67 C/O FILL 3105-3176
09-25-71 C/O FILL 3088-3167; DEEPENED TO 3485'.
INSTALLED 4-1/2" LINER 2916 - 3485'.
PERFED JALMAT 3006 - 3280 (1 SPF 76 HOLES)
ACID 3.1K gals
PERFED LM 3275 - 3468 (1 SPF 33 HOLES)
ACID 1.5K gals
DEEPENED TO 3576' (OH) ACID 1K gals.
CONVERTED TO DUAL INJECTOR
03-30-86 C/O FILL 3481 - 3586; ACID LM 3K gals.
ACID JM 2K gals
CMT SQZ CSG LEAK 649 - 680'.
###

239 - 2975' 8.75" OD HOLE

0 - 3320' 2.375" OD 4.70#/ft J-55 TBG CMT LINED

2943 - 2946' RETRV. PACKER BAKER MODEL B

2980 - 2981' PORTED NIPPLE PERFED (FLOW REG.)

0 - 2974' 7 " OD 17.00#/ft J-55 PROD CSG

3315 - 3316' PORTED NIPPLE PERFED (FLOW REG.)

3320 - 3323' RETRV. PACKER BAKER MODEL AZ

2975 - 3485' 6.25" OD HOLE

2916 - 3485' 4 1/2" OD 9.50#/ft J-55 LINER

3485 - 3576' 3.875" OD HOLE

TEXACO E & P INC.
COOPER JAL UNIT NO. 148
API# 3002509642

0 - 279' CEMENT 135sx Circ.

260 - 261' SQUEEZE PERFS 2 SQZ PERFS

0 - 260' CEMENT 250sx SQZD THRU PERFS/CSG HOLES

279 - 3465' 7.875" OD HOLE

1885 - 3465' CEMENT 300sx Calc. w/ 75% fillup

3222 - 3306' SQUEEZE PERFS 2 SPF (44 HOLES)

0 - 279' 12.25" OD HOLE

170 - 175' SQUEEZE PERFS CSG HOLES

0 - 279' 8.625" OD 28.00#/ft J-55 SURF CSG

2310 FSL & 2310 FEL
SEC 24 , TWN 24 S, RANGE 36 E
ELEVATION: 3318 GL
COMPLETION DATE: 03-28-54
****
COMPLETION INTERVAL: 3465 - 3550 (7 RVRS/QUEEN-OH)
CORED 3005-3230 : AVE PORO = 21.1 %; AVE PERM = 37md;
AVE Sw = 38.9%
TRT: FRAC 4K gals OIL / 6K # sd (3465-3550)
IP: 227 BOPD, 194 MCFD, 0 BWPD (FL)
10-15-56 RE-FRAC 19K gals OIL / 33K # sd.
08-25-59 RECOMPLETE TO JALMAT. BP @ 3355'. w/ 20' CMT CAP.
PERF JM 3220-30,35-39 & 3296-3306 (ALL 2 SPF,
44 HOLES). FRAC 15K gals OIL / 23.3K # sd.
06-14-71 CONVERT TO LANGLIE MATTIX INJECTOR. DID NOT
SQZ JALMAT PERFS. SET INJ. PKR @ 3391'.
10-01-79 SI WELL. DISCOVERED 350 psig ON CASING. PRESS.
BLED TO 0 IN THREE DAYS.
11-26-79 SET BP @ 3350'. SQZD JM PERFS w/ 200sx "C" @
1000 psi. TESTED TO 1000 psi. OK! DRILLED OUT
AND PLACED OH INJECTION.
10-14-84 ACID LM (3465-3550) 1K gals.
03-11-86 C/O & SIDEJET OH. ACID LM (3465-3550) 2K gals.
DISCOVERED CSG. LEAKS @ 170' & OLD JM PERFS.
(3222-3306). PERF 2 HOLES @ 260'. SQZD w/ 250sx
CIRC. SQZD 3222-3306 w/ 250sx "C". TESTED CSG
(0 - 3400') TO 600 psi, LOST 20 psi IN 30 MIN.
C/O CIBP @ 3400'. PLACED ON INJECTION.
02-25-88 TESTED CSG TO 400 psi. HELD OK FOR 30 MIN.
ACID 3K gals. DID NOT C/O. RAN NEW FLOUR. TBG.
03-10-88 STEP RATE TEST INDICATES FRAC PRESS (SURFACE)
IS 1020 psig.
07-18-91 FAILED MIT. SHUT-IN. (OLD JALMAT PERFS).
****

0 - 3412' 2.375" OD 4.70#/ft J-55 TBG FLOUROLINED

3412 - 3415' RETRV. PACKER BAKER AD-1

0 - 3465' 5.5" OD 14.00#/ft J-55 PROD CSG

3465 - 3550' 4.75 " OD HOLE

KB ELEV: 3328'
PBTD: 3330'
TD: 3550'

TEXACO E & P INC.
COOPER JAL UNIT NO. 150
API# 3002511159

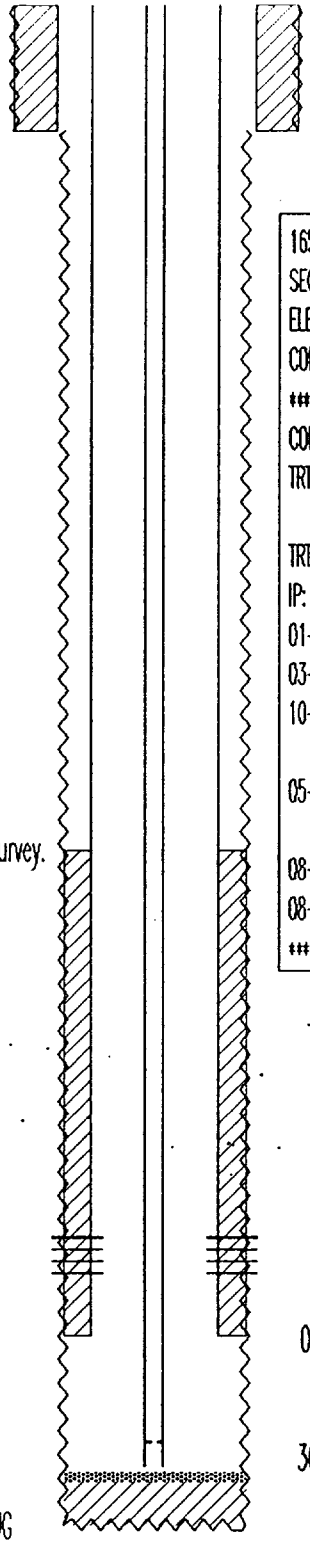

0 - 314' CEMENT 175sx Circ.

0 - 314' 12.25" OD HOLE

0 - 314' 8.625" OD 32.00#/ft J-55 SURF CSG

1650 FSL & 990 FWL
SEC 19 , TWN 24 S, RANGE 37 E
ELEVATION: 3284 GL
COMPLETION DATE: 12-22-48
****
COMPLETION INTERVAL: 3085 - 3100 (YATES)
TRT : NONE
3100 - 3190 (YATES)
TRT: ACID 2.5K gals
IP: 32 BOPD, 78 MCFD, 0 BWPD (FL)
01-10-55 C/O TO PBTD (3350').
03-21-56 FRAC 10K gals OIL / 10K # sd. (3085-3190)
10-22-73 C/O FILL 3210-3318. DRILL TO 3450'.
SIDE JET OH 3350 - 3450. ACID 3K gals.
05-25-75 C/O 3460-3714. FRAC OH 40K gals /
37K # 20/40 & 10K # 10/20.
08-05-77 ISOLATED ZONE TEST.
08-20-87 C/O TO 3693'.
****

2126 - 3350' CEMENT 450sx TOC by Temp Survey.

314 - 3824' 7.875 " OD HOLE

3085 - 3100' PERFS 4 SPF (60 Holes)
3100 - 3190' PERFS 4 SPF (360 HOLES)

0 - 3350' 5.5" OD 15.50#/ft J-55 PROD CSG

0 - 3675' 2.375" OD 4.70#/ft J-55 TBG
3615 - 3616' SEATING NIPPLE

3693 - 3714' SAND FILL

3714 - 3824' CEMENT PLUG

KB ELEV: 3296'
PBTD: 3695'
TD: 3824'

TEXACO E & P INC.
COOPER JAL UNIT NO. 151
API# 3002525682

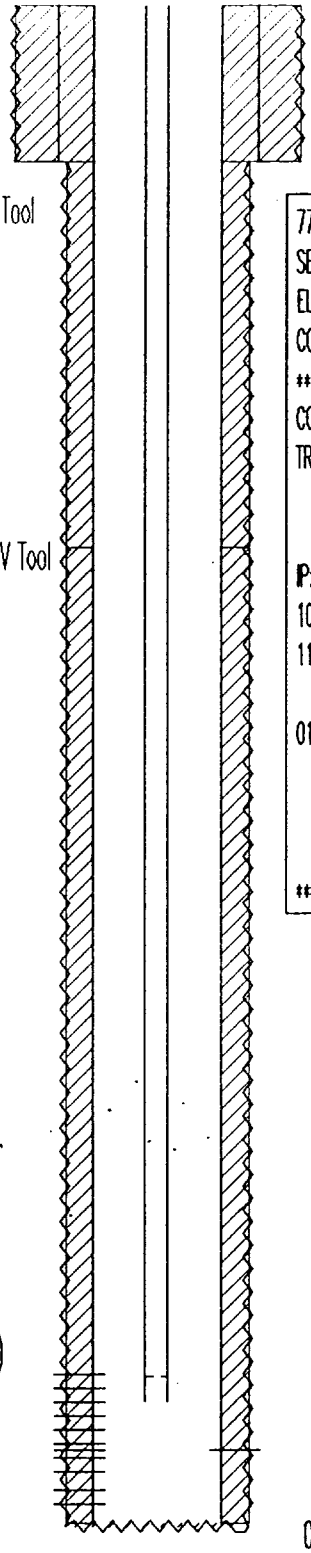

0 - 373' CEMENT 275sx Circ.

0 - 1300' CEMENT 215sx Circ. Thru DV Tool

1300 - 3656' CEMENT 525sx Circ. past DV Tool

3296 - 3530' PERFS 1 SPF (42 HOLES)

3572 - 3576' PERFS 1 SPF (5 HOLES)

3604 - 3608' PERFS 1 SPF (5 HOLES)

3656 - 3662' CEMENT PLUG

KB ELEV: 3316'

TD: 3662'

0 - 373' 12.25" OD HOLE

0 - 373' 8.625" OD 24.00#/ft K-55 SURF CSG

771 FNL & 170 FEL
SEC 24 , TWN 24 S, RANGE 36 E
ELEVATION: 3303.5 GL
COMPLETION DATE: 11-18-77
****
COMPLETION INTERVAL: 3296 - 3608 (QUEEN)
TRT: ACID 6.5K gals (3296 - 3608)
FRAC 60K gals / 44K # 20/40 & 40K # 10/20 sd.
(2 EQ. STAGES w/ BALL BLOCKS - MAX CONC. 2 ppg)
IP: 66 BOPD, 56.8 MCFD, 116 BWPD (PMP)
10-16-79 ACID 1.5K gals & 2 DRUMS SCALE INHIBITOR.
11-10-87 TAGGED FILL @ 3608'. NO C/O.
ACID 2K gals.
01-30-93 TAGGED FILL @ 3603'. NO C/O.
PERFED LM 3460 - 3480 - 8 SPF (160-0.46" HOLES)
FRAC LM 35.65K gals / 78K # 12/20 BRADY.
(SCREENED OUT w/ 9 ppg ON FORMATION)
****

373 - 3662' 7.875 " OD HOLE

0 - 3360' 2.875" OD 6.40#/ft J-55 TBG

3301 - 3302' SEATING NIPPLE

3460 - 3480' PERFS 8 SPF (160 HOLES)

0 - 3656' 5.5" OD 15.50#/ft J-55 PROD CSG

TEXACO E & P INC.
COOPER JAL UNIT NO. 152
API# 3002509627

0 - 264' CEMENT 215sx Circ.

0 - 264' 15.5 " OD HOLE

0 - 264' 13" OD 50.00#/ft J-55 SURF CSG

0 - 1386' CEMENT 550sx Circ.

264 - 1386' 12.25" OD HOLE

660 FNL & 660 FWL
SEC 24 , TWN 24 S, RANGE 36 E
ELEVATION: 3327 GL
COMPLETION DATE: 01-13-36
****
TRT: 3508-3630 (ACID 3K gals) & SWAB; PB to 3536'.
COMPLETION INTERVAL: 2900 - 3200 (YATES)
IP: 0 BOPD, 2000 MCFD, 0 BWPD (FL); FTP = 200 psig
01-24-55 TEMP. SURVEY INDICATED GAS ENTRY @ 3050-3130'.
RE-PERFED JM 3020 - 3160 (4 SPF - 560 HOLES).
03-05-56 SET CIBP @ 3250' w/ 8' CMT.
FRAC 12K gals OIL / 18K # sd. AR = 13 BPM.
01-07-70 WELL UNABLE TO FLOW INTO HIGH P. GAS LINE.
12-01-70 WELL SI & TA'd.
04-18-76 PLACED WELL ON ROD PUMP.
10-18-77 C/O TO 3553. LOGGED WELL. PERFED LM 3450-3524
(1 SPF - 30 HOLES). ACID 3K gals.
DISCOVERED COMMUNICATION BEHIND PIPE.
****

0 - 1386' 9.625" OD 36.00#/ft J-55 INT CSG

2640 - 3551' CEMENT 150sx Calc. w/ 75% fillup

2900 - 3200' PERFS 1 SPF EVERY 2' 152 HOLES)
2900 - 3200' PERFS 1 SPF (EVERY 6' 51 HOLES)
3020 - 3160' PERFS 4 SPF (560 HOLES)

0 - 3463' 2.375" OD 4.70#/ft J-55 TBG
3427 - 3428' SEATING NIPPLE

3450 - 3546' PERFS 1 SPF (30 HOLES)

0 - 3551' 7 " OD 24.00#/ft J-55 PROD CSG

1386 - 3757' 8.75" OD HOLE

3553 - 3757' CEMENT PLUG 50sx

KB ELEV: 3346'
TD: 3757'

TEXACO E & P INC.
COOPER JAL UNIT NO. 153
API# 3002526128

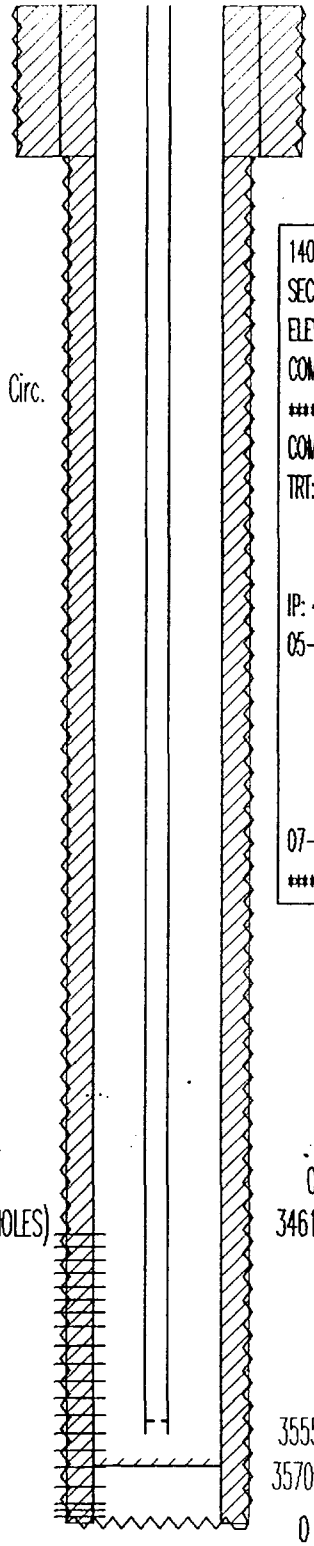

0 - 368' CEMENT 250sx Circ.

0 - 368' 12.25" OD HOLE

0 - 368' 8.625" OD 24.00#/ft K-55 SURF CSG

1400 FSL & 280 FWL
SEC 19 , TWN 24 S, RANGE 37 E
ELEVATION: 3290.7' GL
COMPLETION DATE: 02-01-79
****
COMPLETION INTERVAL: 3278 - 3576 (QUEN)
TRT: ACID 4.9K gals (3278 - 3576)
FRAC 38K gals / 32.5K # 20/40 & 15K # 10/20
(MAX CONC. 2ppg; 2 EQUAL STAGES w/ BALL BLOCKS)
IP: 49 BOPD, 45.6 MCFD, 189 BWPD (PMP)
05-07-87 C/O TO 3700'; PERF ADD'L LM 3616-3696 (86 HOLES)
ACID 3.5K gals; FRAC 30K gals / 59K # 12/20.
(MAX CONC. 7 PPG)
PERF ADD'L JALMAT 3003-3229 (118 HOLES);
ACID 6K gals; FRAC 44.1K gals / 75K # 12/20.
07-02-87 SET CIBP 3570'.
****

0 - 3711' CEMENT 1000sx Circ.

368 - 3711' 7.875 " OD HOLE

0 - 3493' 2.875" OD 6.40#/ft J-55 TBG
3461 - 3462' SEATING NIPPLE

3003 - 3229' PERFS 2 SPF (61 INT. 122 HOLES)
3278 - 3576' PERFS 1 SPF (17 HOLES)

3616 - 3622' PERFS 2 SPF (14 HOLES)
3641 - 3664' PERFS 2 SPF(48 HOLES)
3675 - 3680' PERFS 2 SPF (12 HOLES)
3691 - 3696' PERFS 2 SPF (12 HOLES)

3555 - 3570' CEMENT PLUG
3570 - 3573' CIBP

0 - 3711' 5.5" OD 15.50#/ft K-55 PROD CSG

KB ELEV: 3302'
PBTD: 3555'
TD: 3711'

TEXACO E & P INC.
COOPER JAL UNIT NO. 154
API# 3002526284

0 - 365' CEMENT 300sx Circ.

0 - 365' 11 " OD HOLE

0 - 365' 8.625" OD 24.00#/ft K-55 SURF CSG

1550 FNL & 2400 FEL
SEC 25 , TWN 24 S, RANGE 36 E
ELEVATION: 3296 GL
COMPLETION DATE: 05-11-79
***
COMPLETION INTERVAL: 3246 - 3570 (7 RVRS/QUEEN)
TRT: ACID 4.5K gals; FRAC 40K gals / 34K # 20/40 &
15K # 10/20 (2 EQ. STAGES - MAX. CONC. 2ppg)
IP: 264 BOPD, 113 MCFD, 24 BWPD (PMP)
06-16-83 TBG LEAK, REPLACED BAD TBG. DID NOT TAG FILL.
11-15-86 DSI 72 HR. PRESSURE BUILDUP.
08-10-88 C/O FILL 3505-3614'. ACID 2.5K gals (25 BALLS).
***

0 - 3655' CEMENT 600sx Circ.

365 - 3655' 7.875 " OD HOLE

0 - 3570' 2.875" OD 6.40#/ft J-55 TBG

3537 - 3538' SEATING NIPPLE

3246 - 3570' PERFS 1 (1/2")SPF - 19 HOLES

0 - 3655' 5.5" OD 15.50#/ft K-55 PROD CSG

KB ELEV: 3304'

TD: 3655'

TEXACO E & P INC.
COOPER JAL UNIT NO. 155(301)
API # 3002511146

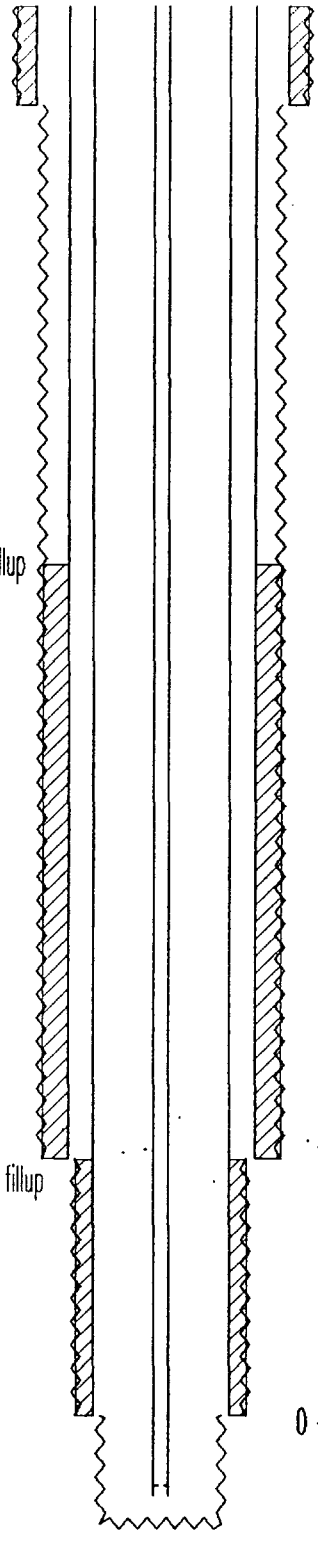

0 - 240' CEMENT 250sx Circ.

1365 - 2822' CEMENT 500sx Calc w/ 75% fillup

2825 - 3456' CEMENT 100sx Calc w/ 75% fillup

0 - 240' 15" OD HOLE

0 - 240' 13" OD 48.00#/ft H-40 SURF CSG

660 FNL & 660 FWL
SEC 18 , TWN 24-S, RANGE 37-E
ELEVATION: 3311 DF
COMPLETION DATE: 01-25-42
****
COMPLETION INTERVAL: 3456 - 3580 (QUEEN-OH)
IP: 15 BOPD, 0 MCFD, 0 BWPD (FLOWING)
06-14-54 PLUGGED BACK TO YATES
11-14-56 FRACED JM w/ 10K gals & 10K# SD
05-23-72 ACIDIZED JM w/ 1K gals
04-08-74 SQZD CSG LEAK
04-15-74 RE-PREF JM; A/ 4K gals
02-22-85 SQZD JM; DEEPENED TO 3720'
A/ 2K gals ; F/ 24K gals &
82.5K #sd. Screened Out.
****

240 - 2822' 12.25" OD HOLE

0 - 2822' 9 5/8" OD 36.00#/ft H-40 INT CSG

2822 - 3456' 8.75" OD HOLE

0 - 3652' 2.375" OD 4.70#/ft J-55 TBG

3627 - 3628' SEATING NIPPLE

0 - 3456' 7" OD 24.00#/ft J-55 PROD CSG

3456 - 3720' 6.25" OD HOLE

KB ELEV: 3311'
TD: 3720'

TEXACO E & P INC.
COOPER JAL UNIT NO. 201
API# 3002509628

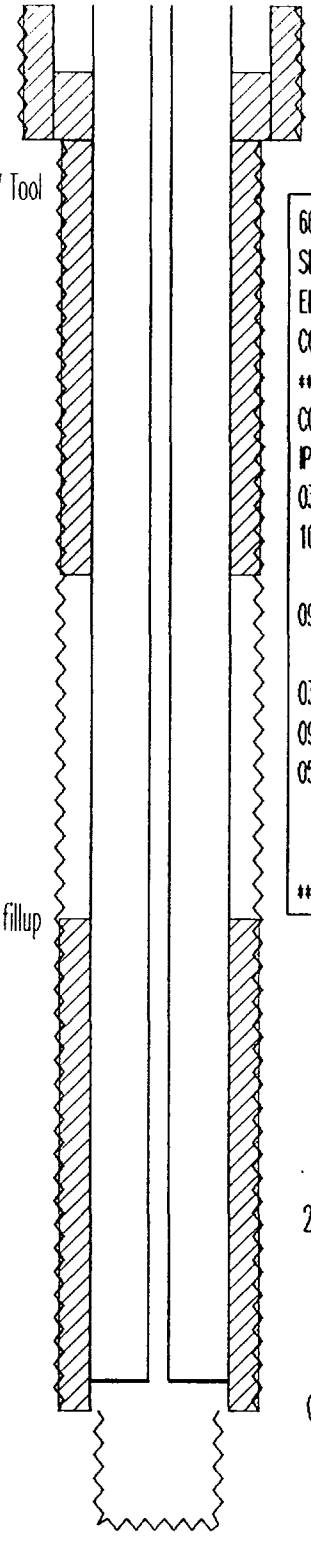

0 - 285' CEMENT 125sx Circ.

140 - 1210' CEMENT 200sx Thru DV Tool

1940 - 2994' CEMENT 200sx Calc w/ 75% fillup

0 - 285' 11 " OD HOLE

0 - 285' 8.625" OD 28.00#/ft J-55 SURF CSG

660 FNL & 330 FEL
SEC 24 , TWN 24 S, RANGE 36 E
ELEVATION: 3308 GL
COMPLETION DATE: 05-02-50
****
COMPLETION INTERVAL: 2994 - 3237 (YATES-OH)
IP: 67 BOPD, 76 MCFD, 0 BWPD (FL)
03-18-58 C/O FILL 3070 - 3237'.
10-03-62 FRAC 30K gals OIL / 75K # sd. (1K # MOTH BALLS)
NEW PBTD 3157'. PB w/ CMT.
09-21-71 CONVERTED TO INJECTION. KILLED WELL.
C/O FILL TO (PBTD) 3157' (GL).
03-17-78 TAGGED FILL @ 3153'. NO C/O.
09-14-81 RAN INJECTION SURVEY. FILL @ 3147'. NO C/O.
05-05-88 C/O FILL 3098 - 3153'. SIDE JETTED OH.
DRILLED OUT CMT PLUG TO 3160'. INSTALLED NEW
CMT LINED TBG.
****

285 - 2994' 7.875 " OD HOLE

0 - 2928' 2.375" OD 4.70#/ft J-55 TBG CMT LINED

2928 - 2931' RETRV. PACKER BAKER AD-1

0 - 2994' 5.5" OD 14.00#/ft J-55 PROD CSG

2994 - 3237' 4.75 " OD HOLE

KB ELEV: 3316'

TD: 3237'

TEXACO E & P INC.
COOPER JAL UNIT NO. 202
API# 3002511148

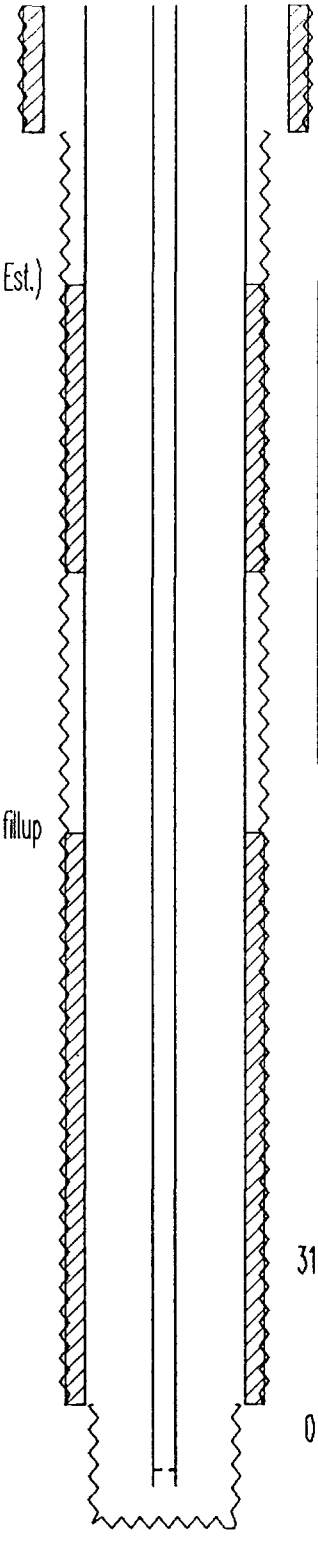

0 - 268' CEMENT 75sx Circ.

592 - 1200' CEMENT 100sx Thru DV (Depth Est.)

1755 - 2972' CEMENT 200sx Calc. w/ 75% fillup

0 - 268' 12.5" OD HOLE

0 - 268' 10.75" OD 32.00#/ft J-55 SURF CSG

990 FNL & 330 FWL
SEC 19 , TWN 24 S, RANGE 37 E
ELEVATION: 3300 GL
COMPLETION DATE: 05-28-50
****
COMPLETION INTERVAL: 2972 - 3224 (YATES-OH)
IP: 72 BOPD, 113 MCFD, 0 BWPD (FL)
07-27-70 T&A'd WELL
05-09-75 C/O FILL 3125 - 3224
05-19-88 C/O FILL 3175 - 3224; ACID 3K gals
(3 STAGES)
****

265 - 2972' 8.75" OD HOLE

0 - 3144' 2.875" OD 6.40#/ft J-55 TBG

3112 - 3113' SEATING NIPPLE

0 - 2972' 7 " OD 20.00#/ft J-55 PROD CSG

2972 - 3224' 6.25" OD HOLE

KB ELEV: 3311'

TD: 3224'

TEXACO E & P INC.
COOPER JAL UNIT NO. 203
API# 3002509630

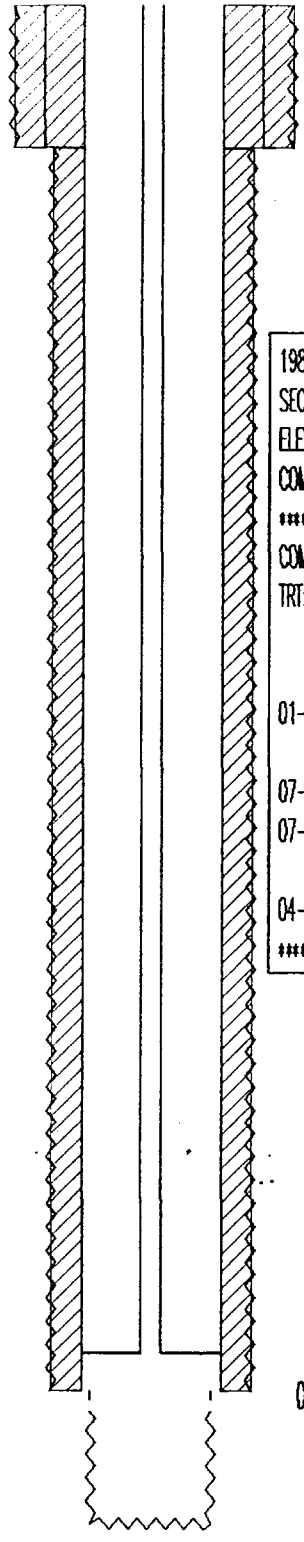

0 - 309' CEMENT 150sx Circ.

0 - 3031' CEMENT 850sx Circ.

0 - 309' 11 " OD HOLE

0 - 309' 8.625" OD 29.75#/ft J-55 SURF CSG

1980 FNL & 760 FWL
SEC 24 , TWN 24 S, RANGE 36 E
ELEVATION: 3334 GL
COMPLETION DATE: 10-21-51
****
COMPLETION INTERVAL: 3037 - 3195 (YATES-OH)
TRT: HYDRA-FRAC 1.5K gals KEROSENE, 500# NAPALM &
400 # OTTAWA SD (3031 - 3195)
IP: 255 BOPD, 282 MCFD, 0 BWPD (FL)
01-23-57 C/O FILL TO 3195'. FRAC OH 20K gals OIL /
30K # sd. AIR = 25.45 BPM @ 2950psig.
07-13-71 CONVERTED TO INJECTION. C/O FILL 3187-3195'.
07-31-90 C/O FILL 3058 - 3190' (132' FILL). TESTED CSG
TO 300 psig.
04-10-91 C/O SCALE IN INJECTION TBG. TEST CSG. TO 300 psi.
****

309 - 3031' 7.875 " OD HOLE

0 - 2946' 2.375" OD 4.70#/ft J-55 TBG CMT LINED

2946 - 2949' RETRV. PACKER BAKER AD-1

0 - 3031' 5.5" OD 14.00#/ft LIMT.SERV. PROD CSG

3031 - 3195' 4.75 " OD HOLE

KB ELEV: 3347'
TD: 3195'

TEXACO E & P INC.
COOPER JAL UNIT NO. 204
API# 3002509629

0 - 313' CEMENT 150sx Circ.

0 - 3030' CEMENT 700sx Circ.

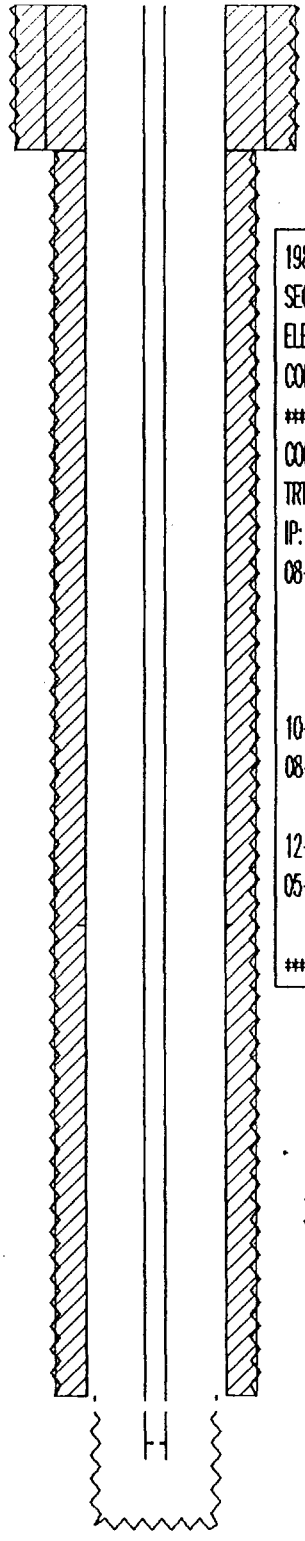

0 - 313' 11 " OD HOLE

0 - 313' 8.625" OD 29.75#/ft J-55 SURF CSG

1980 FNL & 1980 FWL
SEC 24 , TWN 24 S, RANGE 36 E
ELEVATION: 3321 GL
COMPLETION DATE: 10-04-51
****
COMPLETION INTERVAL: 3030 - 3188 (YATES-OH)
TRT: FRAC 1.5K gals OIL / 800 # sd. (3030 - 3188)
IP: 238 BOPD, 94 MCFD, 0 BWPD (FL)
08-15-55 FRAC YATES. USING STRADDLE PKR. 3131-3188'.
FRAC 10K gals OIL / 10K # sd. (3131-3188).
RE-FRAC ENTIRE OH 3030 - 3188'.
FRAC 20K gals OIL / 20K # sd. (3030-3188).
10-11-74 C/O FILL 3010-3188 (178' FILL) & JETWASH OH.
08-12-75 C/O FILL 3085-3188 (103' FILL). SQZD OH w/
SCALE INHIBITOR.
12-13-87 C/O SD BRIDGE @ 3000' & FILL 3053-3088'(35'FILL).
05-11-88 TAG FILL @ 3088'. C/O FILL 3088-3188'(100'FILL).
ACID 5K gals.
****

313 - 3030' 7.875 " OD HOLE

0 - 3102' 2.375" OD 4.70#/ft J-55 TBG
3081 - 3082' SEATING NIPPLE

0 - 2000' 5.5" OD 14.00#/ft J-55 PROD CSG
2000 - 3030' 5.5" OD 15.50#/ft J-55 PROD CSG

3030 - 3188' 4.75 " OD HOLE

KB ELEV: 3333'
TD: 3188'

TEXACO E & P INC.
COOPER JAL UNIT NO. 205
API# 3002509620

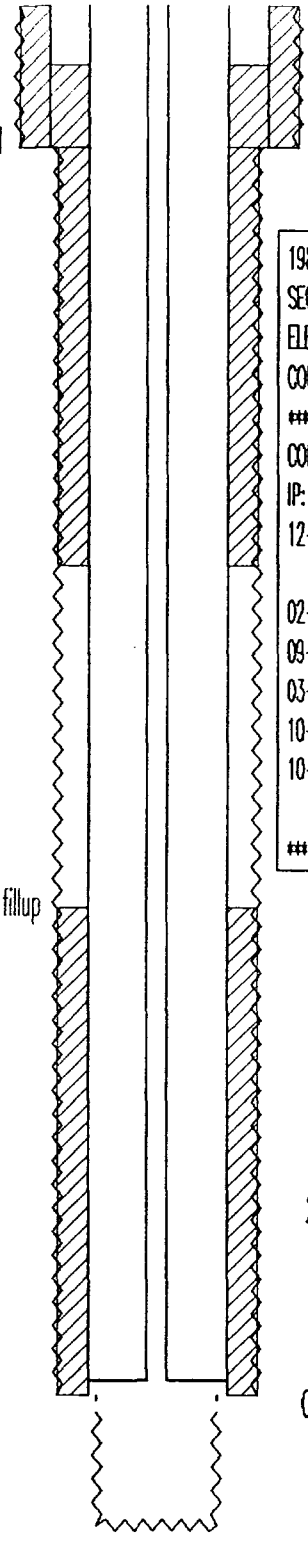

0 - 300' CEMENT 125sx Circ.

125 - 1198' CEMENT 200sx Thru DV Tool

1935 - 2988' CEMENT 200sx Calc w/ 75% fillup

0 - 300' 11 " OD HOLE

0 - 300' 8.625" OD 28.00#/ft J-55 SURF CSG

1980 FNL & 1650 FEL
SEC 24 , TWN 24 S, RANGE 36 E
ELEVATION: 3308 GL
COMPLETION DATE: 05-06-50
****
COMPLETION INTERVAL: 2988 - 3251 (YATES-OH)
IP: 48 BOPD, 61 MCFD, 0 BWPD (FL)
12-04-54 C/O FILL 3054-3251' (197'). FRAC OH w/ 12K gals
OIL / 16K # sd.
02-14-61 PLACED WELL ON ROD PUMP.
09-21-71 CONVERTED TO INJECTION. C/O FILL TO 3251'.
03-16-78 RAN INJ. SURVEY. TAGGED FILL @ 3177' (74' FILL).
10-07-84 TAGGED FILL @ 3063' (188' FILL).
10-15-86 C/O FILL 3058-3251 (193'). JETWASH OH.
ACID OH 4K gals (2 STAGES). INSTALLED NEW TBG.
****

300 - 2988' 7.875 " OD HOLE

0 - 2955' 2.375" OD 4.70#/ft J-55 TBG

2955 - 2958' RETRV. PACKER BAKER AD-1

0 - 2988' 5.5" OD 14.00#/ft J-55 PROD CSG

2988 - 3251' 4.75 " OD HOLE

KB ELEV: 3319'

TD: 3251'

TEXACO E & P INC.
COOPER JAL UNIT NO. 206
API# 3002509621

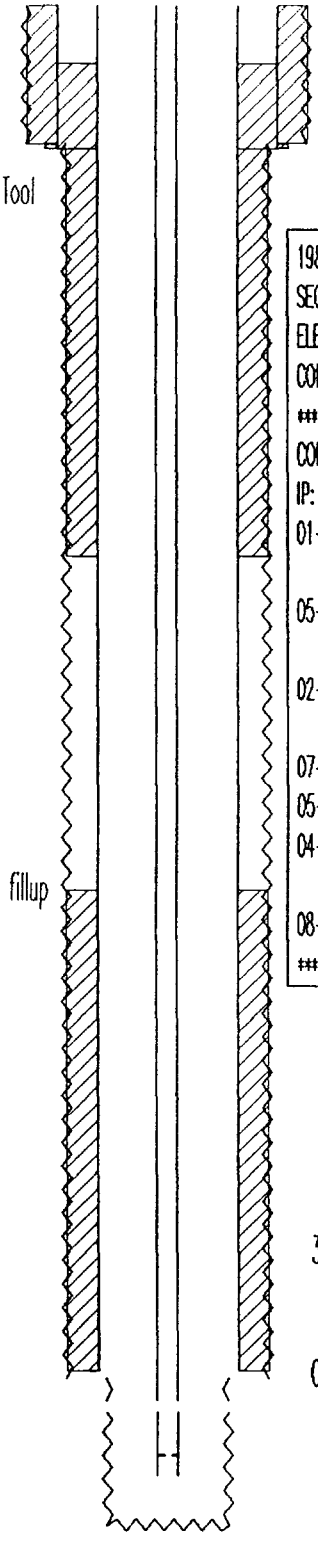

0 - 310' CEMENT 125sx Circ.

125 - 1200' CEMENT 200sx Thru DV Tool

1930 - 2983' CEMENT 200sx Calc w/ 75% fillup

KB ELEV: 3313'
TD: 3230'

0 - 300' 11 " OD HOLE

0 - 310' 8.625" OD 28.00#/ft J-55 SURF CSG

1980 FNL & 330 FEL
SEC 24 , TWN 24 S, RANGE 36 E
ELEVATION: 3304 GL
COMPLETION DATE: 05-08-50
****
COMPLETION INTERVAL: 2983 - 3230 (YATES-OH)
IP: 54 BOPD, 76 MCFD, 0 BWPD (FL)
01-25-63 FRAC OH 40K gals OIL / 100K # sd. COULD NOT C/O BELOW 3070'. PLACED ON PUMP.
05-11-63 ATTEMPTED TO C/O & RUN LINER. COULD NOT GET BELOW 3096' INSTALLED SLOTTED LINER @ 3096'.
02-19-73 C/O FILL 3066-3096'. FISHED ALL LINER. C/O TO 3230' (134' FILL). JETWASHED OH. POP.
07-12-74 C/O FILL 3100-3220' (130' FILL).
05-12-75 C/O FILL 3123-3230' (107' FILL).
04-16-78 RAN SCALE ANALYSIS. 60% CaCO3, 20% PARRIFIN, 15% SALTS, 3% CaSO4, 2% FeO2
08-10-87 C/O TO 3128' w/ BAILER (SOLID FILL @ 3128'.)
****

300 - 3000' 7.875 " OD HOLE

0 - 3150' 2.375" OD 4.70#/ft J-55 TBG
3118 - 3119' SEATING NIPPLE

0 - 2983' 5.5" OD 14.00#/ft PROD CSG

3000 - 3230' 4.75 " OD HOLE

TEXACO E & P INC.
COOPER JAL UNIT NO. 208
API# 3002511158

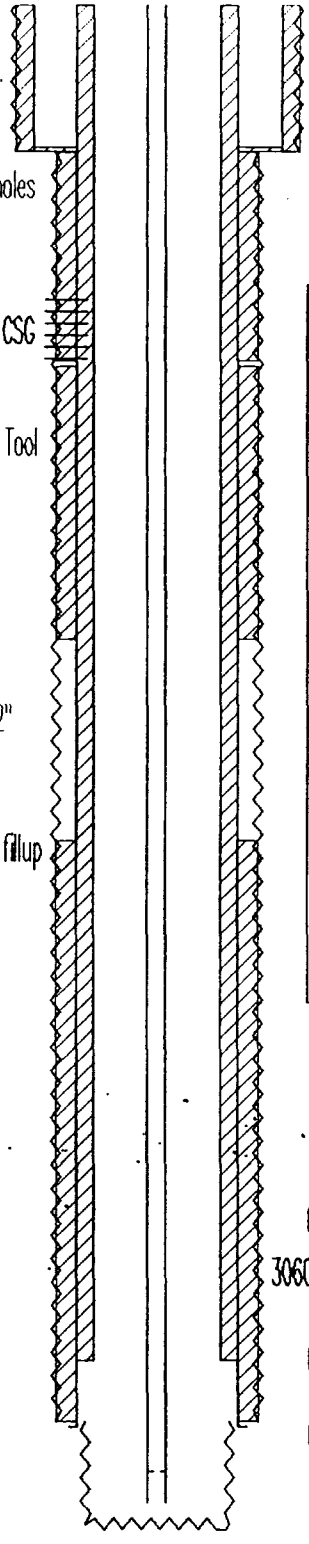

0 - 304' CEMENT 75sx Circ.

295 - 740' CEMENT 110sx SQZD thru holes

600 - 734' PERFS SQZD HOLES IN 7" CSG

750 - 1319' CEMENT 100sx Thru DV Tool

0 - 2827' CEMENT 275sx Circ. on 5-1/2"

1740 - 2956' CEMENT 200sx Calc. w/ 75% fillup

0 - 304' 12.25" OD HOLE

0 - 304' 10.75" OD 40.00#/ft J-55 SURF CSG

2310 FNL & 1650 FWL
SEC 19 , TWN 24 S, RANGE 37 E
ELEVATION: 3293 GL
COMPLETION DATE: 05-09-50
****
COMPLETION INTERVAL: 2956 - 3169 (YATES-OH)
IP: 109 BOPD, 200 MCFD, 0 BWPD (FL); FTP=600 psig
01-05-73 SWABBED WELL
01-16-73 INSTALLED ROD PMP; FILL @ 3100'. NO C/O.
05-05-75 C/O FILL 3060 - 3169'.
04-08-76 C/O FILL 3000 - 3169'. ACID 1.5K gals;
FRAC 30K gals / 30K # 20/40 & 9K # 10/20.
04-27-88 C/O FILL 3034 - 3167'.
08-06-88 CMT SQZD CSG LEAK 0 TO 734'.
10-10-88 INSTALLED 5-1/2" LINER. C/O & SIDEJET
TO 3167'; ACID 5K gals w/ 2% MS.
02-21-89 C/O FILL 3124 - 3167'.
****

304 - 2956' 8.75" OD HOLE

0 - 3126' 2.375" OD 4.70#/ft J-55 TBG

3060 - 3061' SEATING NIPPLE

0 - 2827' 5.5" OD 15.35#/ft K-55 LINER

0 - 2965' 7 " OD 20.00#/ft J-55 PROD CSG

2956 - 3169' 6.25" OD HOLE

KB ELEV: 3310'
TD: 3169'

TEXACO E & P INC.
COOPER JAL UNIT NO. 209
API# 3002509635

0 - 1215' CEMENT 500sx Circ.

430 - 3680' CEMENT 600sx Calc w/ 75% fillup

2080 FSL & 700 FWL
SEC 24 , TWN 24 S, RANGE 36 E
ELEVATION: 3339 DF , 3329' GL
COMPLETION DATE: 10-05-54
****
COMPLETION INTERVAL: 3542 - 3485 (7 RVRS/QUEEN)
TRT: ACID 250 gals; FRAC 12K gals OIL / 12K # sd.(2 JOBS).
IP: 9 BOPD, 105 MCFD, 2 BWPD (FL)
01-20-56 RECOMPLETED TO JALMAT. BP @ 3500'. PERF 3224 -
3247. ACID 500 gals; FRAC 10K gals OIL /
10K # SD. SET BP @ 3212'.
PERF 3160 - 3195'. ACID 500 gals ;
FRAC 10K gals OIL / 10K # sd. C/O TO 3490'.
JALMAT IP: 47 BOPD, 438 MCFPD, 0 BWPD.
07-11-60 WELL SI.
02-08-74 C/O BP @ 3500' & C/O TO 3660'. PERF 3460-3596'.
(3460,69,70,82,98,3500,02,26,28,93,94 & 3596)
ACID 1.25K gals; FRAC (3460-3629) 30K gals /
31K # 20/40 sd & 18K # 10/20 sd. FILL @ 3590'.
03-20-79 C/O 3573-3607 (34' FILL). SET BP @ 3314'.
ACID JM 2K gals ; TESTED 21 BOPD, 12 BWPD.
PULLED BP. TOTAL DHC PROD. 32 BOPD, 22 BWPD.
01-22-87 TAGGED FILL @ 3638'.
****

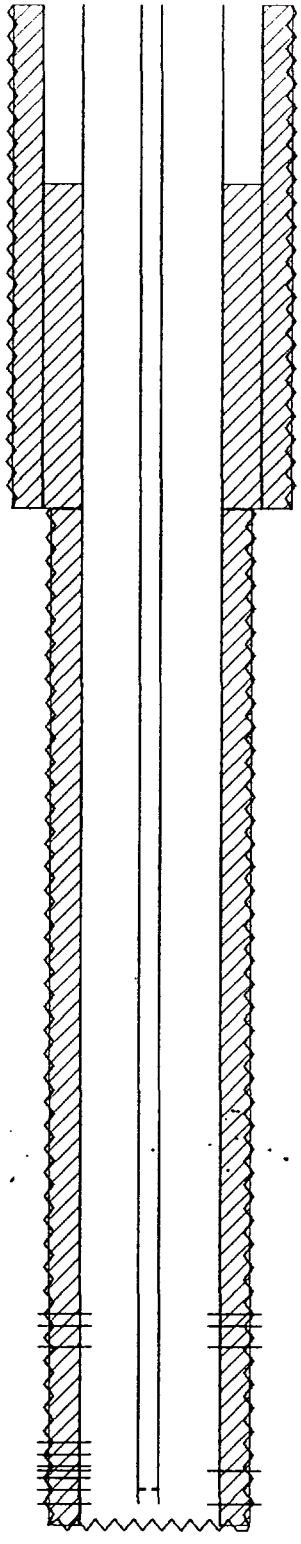

0 - 1215' 11 " OD HOLE

0 - 1215' 8.625" OD 29.75#/ft J-55 SURF CSG

1215 - 3680' 7.875 " OD HOLE

0 - 3625' 2.375" OD 4.70#/ft J-55 TBG

3593 - 3594' SEATING NIPPLE

3160 - 3195' PERFS 4 SPF (144 HOLES)

3224 - 3247' PERFS 4 SPF (96 HOLES)

3542 - 3548' PERFS 4 SPF (28 HOLES)

3460 - 3596' PERFS 1 SPF (12 HOLES)

3623 - 3629' PERFS 4 SPF (28 HOLES)

0 - 3680' 5.5" OD 14.00#/ft J-55 PROD CSG

KB ELEV: 3342'

TD: 3681'

TEXACO E & P INC.
COOPER JAL UNIT NO. 210
API# 3002509633

0 - 293' CEMENT 150sx Circ.

438 - 3020' CEMENT 900sx TOC by TEMP. SURV.

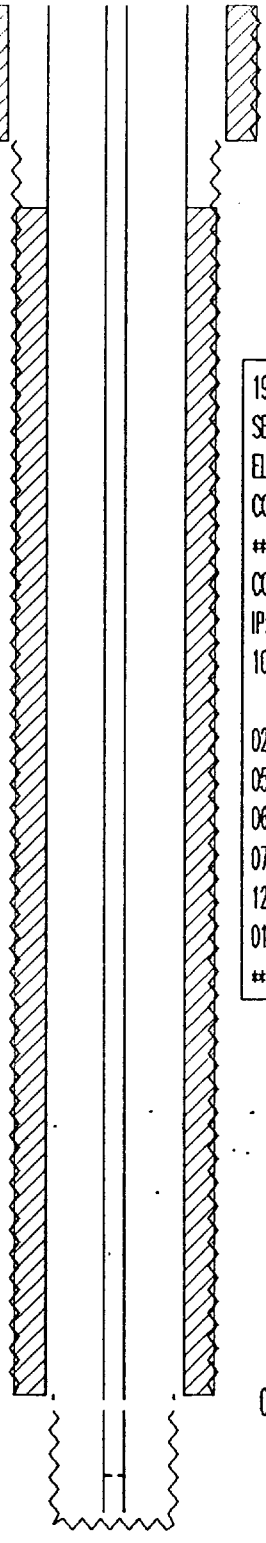

0 - 293' 11 " OD HOLE

0 - 293' 8.625" OD 29.00#/ft J-55 SURF CSG

1980 FSL & 660 FWL
SEC 24 , TWN 24 S, RANGE 36 E
ELEVATION: 3326 GL
COMPLETION DATE: 05-20-51
****
COMPLETION INTERVAL: 3020 - 3191 (YATES-OH)
IP: 216 BOPD, 376 MCFD, 0 BWPD (FL)
10-20-58 PB w/ SAND TO 3110'. FRAC (3020-3110) w/
20.4K gals OIL / 30K # 20/40 sd.
02-25-74 C/O STUCK TBG. C/O MUD ANCHOR.
05-14-75 C/O FILL 3077-3191 (114' FILL). JETWASH OH.
06-17-75 STUCK PMP.
07-15-75 STUCK PMP.
12-30-75 STUCK PMP.
01-31-79 C/O FILL 3073-3191 (118' FILL). JET WASH OH.
****

293 - 3020' 7.875 " OD HOLE

0 - 3173' 2.375" OD 4.70#/ft J-55 TBG

3121 - 3122' SEATING NIPPLE

0 - 3020' 5.5" OD 17.00#/ft J-55 PROD CSG

3020 - 3191' 4.75 " OD HOLE

KB ELEV: 3338'

TD: 3191'

TEXACO E & P INC.
COOPER JAL UNIT NO. 211
API# 3002509787

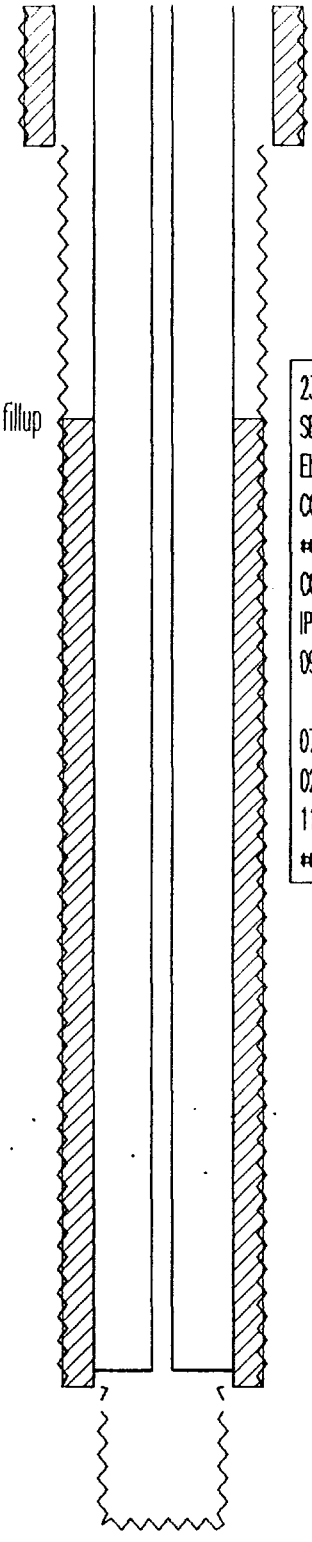

0 - 302' CEMENT 125sx Circ.

0 - 302' 11 " OD HOLE

0 - 302' 8.625" OD 29.75#/ft J-55 SURF CSG

895 - 3001' CEMENT 400sx Calc w/ 75% fillup

2310 FSL & 2310 FWL
SEC 24 , TWN 24 S, RANGE 36 E
ELEVATION: 3312 GL
COMPLETION DATE: 04-04-50
****
COMPLETION INTERVAL: 3001 - 3244 (YATES-OH)
IP: 56 BOPD, 53 MCFD, 0 BWPD (FL)
09-09-54 FRAC OH 2K gals OIL / 3K # sd. ;
RE-FRAC 14K gals OIL / 18K # sd.
07-14-57 C/O TO 3244' & PLACE ON PMP.
02-22-59 C/O TO 3244' (NO REPORT ON LOC. OF FILL)
11-17-70 CONVERTED TO INJECTION. C/O FILL TO 3244'.
****

302 - 3001' 7.875 " OD HOLE

0 - 2964' 2.375" OD 4.70#/ft J-55 TBG CMT LINED

2964 - 2967' RETRV. PACKER BAKER AD-1

0 - 3001' 5.5" OD 14.00#/ft J-55 PROD CSG

3001 - 3244' 4.75 " OD HOLE

KB ELEV: 3325'
TD: 3244'

TEXACO E & P INC.
COOPER JAL UNIT NO. 213
API# 3002509623

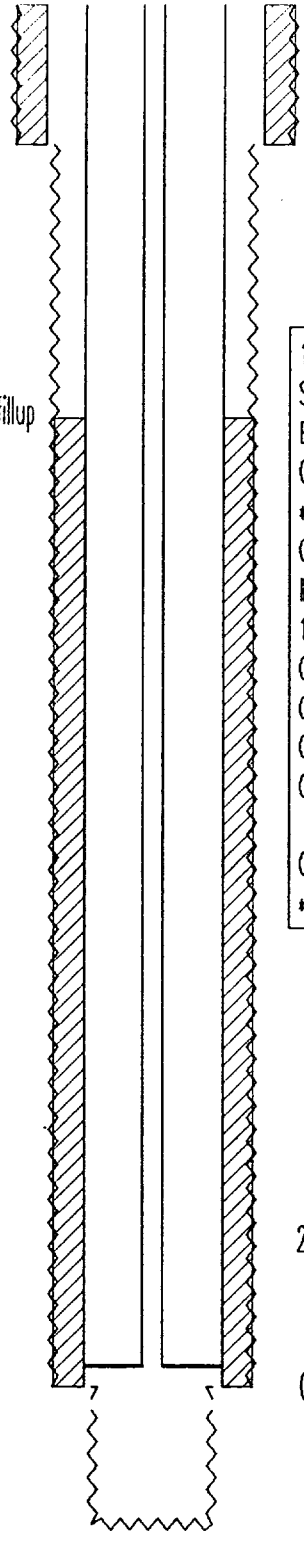

0 - 302' CEMENT 125sx Circ.

0 - 302' 11 " OD HOLE

0 - 302' 8.625" OD 29.75#/ft J-55 SURF CSG

895 - 3003' CEMENT 400sx Calc. w/ 75% fillup

1980 FSL & 660 FEL
SEC 24 , TWN 24 S, RANGE 36 E
ELEVATION: 3306 GL
COMPLETION DATE: 03-16-50
***
COMPLETION INTERVAL: 3003 - 3220 (YATES-OH)
IP: 66 BOPD, 76 MCFD, 0 BWPD (FL)
11-11-54 C/O FILL TO 3220'.
08-14-56 C/O FILL TO 3220'.
07-17-66 C/O FILL TO 3220'.
05-07-71 CONVERTED TO INJECTION. C/O BRID. 3096 - 3220'.
07-17-87 C/O BRID. 3096 - 3195 & SOLID FILL 3205 - 3220'.
REC. FeSO4, CaCO3 & FORMATION.
01-14-89 REPLACED TBG. w/ NEW CMT. LINED TBG. STRING.
***

302 - 3003' 7.875 " OD HOLE

0 - 2958' 2.375" OD 4.70#/ft J-55 TBG

2958 - 2961' RETRV. PACKER BAKER AD-1

0 - 3003' 5.5" OD 14.00#/ft J-55 PROD CSG

3003 - 3220' 4.75 " OD HOLE

KB ELEV: 3311'
TD: 3220'

TEXACO E & P INC.
COOPER JAL UNIT NO. 215
API# 3002509611

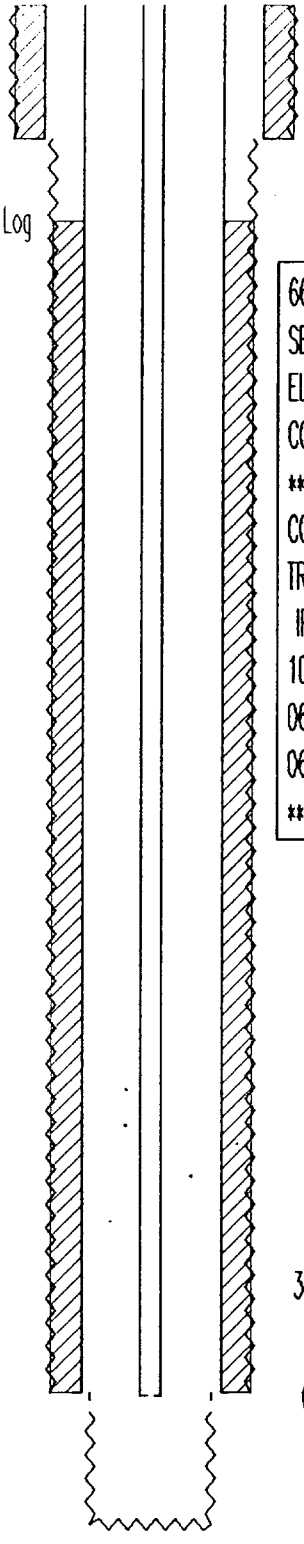

0 - 289' CEMENT 175sx Circ.

470 - 3032' CEMENT 1000sx TOC by Temp. Log

0 - 289' 11 " OD HOLE

0 - 289' 8.625" OD 29.75#/ft J-55 SURF CSG

660 FSL & 660 FEL
SEC 23 , TWN 24 S, RANGE 36 E
ELEVATION: 3323 GL
COMPLETION DATE: 06-27-51
****
COMPLETION INTERVAL: 3032 - 3193 (YATES-OH)
TRT: FRAC 1.35K gals KEROSENE/ 800 # sd.
IP: 355 BOPD, 390 MCFD, 0 BWPD (FL)
10-20-53 FRAC OH 4K gals OIL / 4K # sd.
06-10-57 FRAC OH 20K gals OIL / 40K # sd.
06-02-76 ACID 1K gals; 2 DRUMS SCALE INHIBITOR.
****

289 - 3032' 7.875" OD HOLE.

0 - 3041' 2.375" OD 4.70#/ft J-55 TBG

3040 - 3041' SEATING NIPPLE

0 - 3032' 5.5" OD 15.50#/ft J-55 PROD CSG

3032 - 3193' 4.75 " OD HOLE

KB ELEV: 3333'

TD: 3193'

TEXACO E & P INC.
COOPER JAL UNIT NO. 216
API# 3002509634

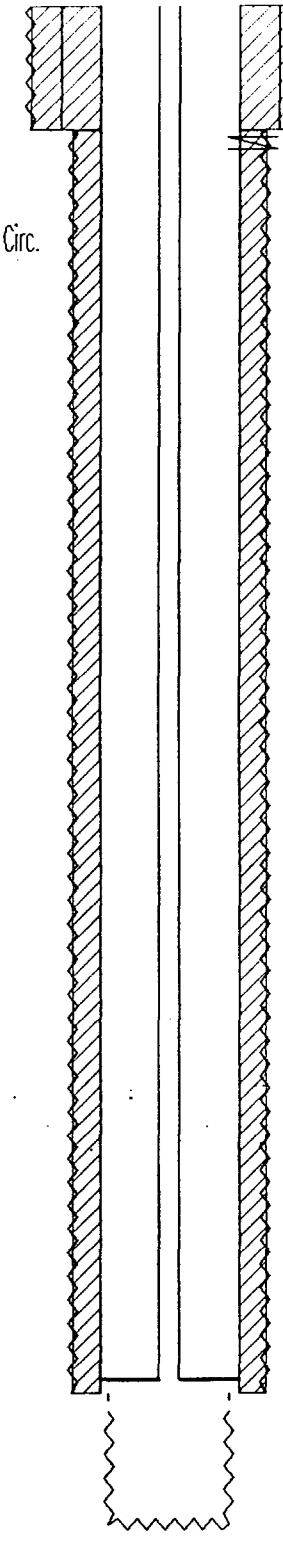

0 - 269' CEMENT 150sx Circ.

0 - 3035' CEMENT 900sx Circ.

0 - 269' 11 " OD HOLE

0 - 269' 8.625" OD 32.00#/ft J-55 SURF CSG

277 - 310' SQUEEZE PERFS 400sx THRU CSG HOLES

4620 FNL & 4620 FEL
SEC 24 , TWN 24 S, RANGE 36 E
ELEVATION: 3324 GL
COMPLETION DATE: 06-07-51
****
COMPLETION INTERVAL: 3035 - 3210 (YATES-OH)
TRT: HYDRA-FRAC 1.5K gals KEROSENE, 400# NAPALM SOAP &
800# OTTAWA SD.
IP: 165 BOPD, 159 MCFD, 0 BWPD (FL)
12-08-52 RE-FRAC (OH) 3035-3210; 12K gals OIL / 12K # sd.
08-08-57 RE-FRAC (OH) 20K gals OIL / 40K # sd. w/
6.8K # MOTHBALLS. AIR 15.8 BPM (3-600# BLOCKS)
06-28-71 CONVERTED TO INJECTION. C/O STUCK TBG.
C/O FILL TO 3210'.
11-09-79 TAG FILL w/ 1" SB @ 3055' (155' FILL).
01-30-85 SQZD CSG HOLES 277-310 w/ 400sx. C/O TO 3210'.
04-06-88 REPLACED TBG w/ NEW FLOUROLINED YELLOW BAND TBG.
TEST CSG. TO 340 psig. OK!
****

269 - 3035' 7.625" OD HOLE

0 - 3003' 2.375" OD 4.70#/ft J-55 TBG CMT LINED

3003 - 3006' RETRV. PACKER BAKER AD-1

0 - 3035' 5.5" OD 17.00#/ft J-55 PROD CSG

3035 - 3210' 4.75 " OD HOLE

KB ELEV: 3336'
TD: 3210'

TEXACO E & P INC.
COOPER JAL UNIT NO. 217
API# 3002509626

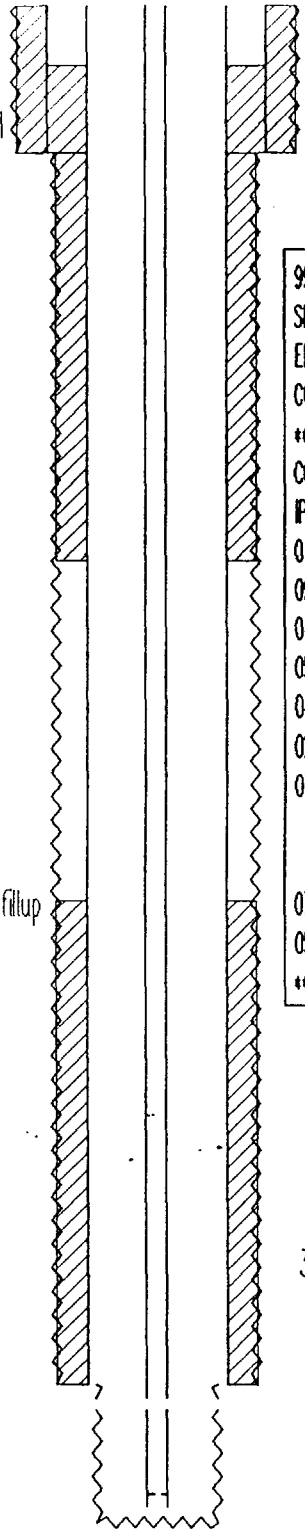

0 - 318' CEMENT 125sx Circ.

130 - 1205' CEMENT 200sx Thru DV Tool

1945 - 2998' CEMENT 200sx Calc w/ 75% fillup

0 - 318' 11 " OD HOLE

0 - 318' 8.625" OD 28.00#/ft J-55 SURF CSG

990 FSL & 2310 FWL
SEC 24 , TWN 24 S, RANGE 36 E
ELEVATION: 3318 GL
COMPLETION DATE: 03-01-50
****
COMPLETION INTERVAL: 2998 - 3244 (YATES-OH)
IP: 55 BOPD, 64 MCFD, 0 BWPD (FL)
01-26-54 C/O FILL TO 3244'.
09-11-55 C/O FILL TO 3244'.
04-15-57 C/O FILL TO 3244'.
05-15-57 PLACED WELL ON ROD PUMP.
04-10-69 C/O FILL 3174-3244 (70' FILL).
02-02-73 CHECKED FOR FILL (NONE PRESENT).
07-05-75 C/O FILL 3040-3244 (204' FILL). SQZD 4 DRUMS SCALE INHIBITOR. ACID 1.5K gals RE-SQZD w/ 2 DRUMS SCALE INHIB.
07-15-86 TAGGED FILL @ 3125' (119' FILL).
05-27-88 C/O FILL 3122-3244 (122' FILL). JETWASH OH.
****

318 - 2998' 7.875 " OD HOLE

0 - 3215' 2.375" OD 4.70#/ft J-55 TBG

3190 - 3191' SEATING NIPPLE

0 - 2998' 5.5" OD 14.00#/ft J-55 PROD CSG

2998 - 3244' 4.75 " OD HOLE

KB ELEV: 3328'
TD: 3244'

TEXACO E & P INC.
COOPER JAL UNIT NO. 218
API# 3002509624

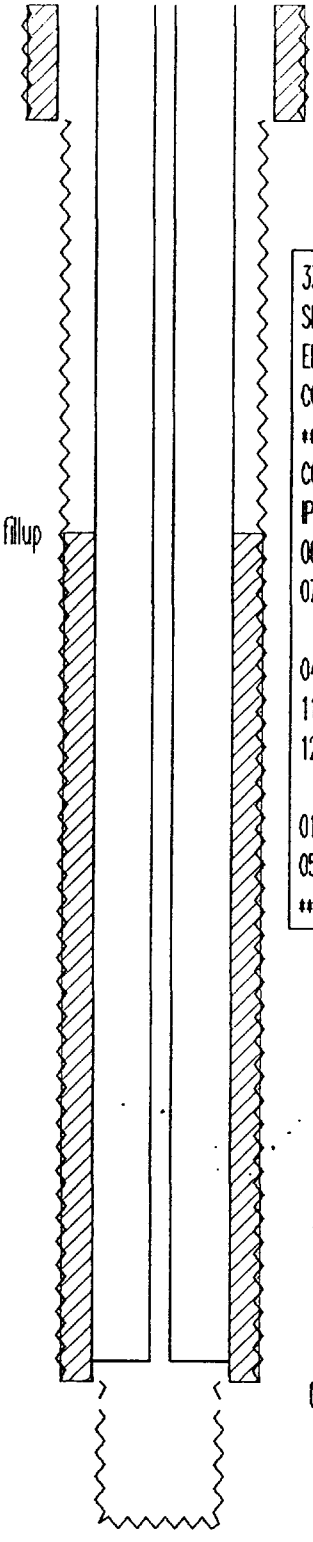

0 - 247' CEMENT 125sx Circ.

1145 - 2991' CEMENT 350sx Calc. w/ 75% fillup

0 - 247' 11 " OD HOLE

0 - 247' 8.625" OD 28.00#/ft J-55 SURF CSG

330 FSL & 1650 FEL
SEC 24 , TWN 24 S, RANGE 36 E
ELEVATION: 3315 GL
COMPLETION DATE: 10-25-49
****
COMPLETION INTERVAL: 2991 - 3250 (YATES-OH)
IP: 54 BOPD, 82 MCFD, 0 BWPD (FL)
06-12-53 C/O FILL TO 3241'. HRDRA-FRAC w/ 1.5K gals.
07-08-65 C/O FILL 3005-3248' (243' FILL). SALT BRIDGE
FROM 3005-3244'.
04-29-71 CONVERTED TO INJECTION. C/O FILL 3221-3238' .
11-11-76 RAN INJ. PROFILE. TAG FILL @ 3084' (166' FILL).
12-01-76 C/O FILL 3084-3250. JETWASH OH.
TIGHT SPOT @ 3120'.
01-15-86 REPLACED CMT LINED TBG.
05-14-88 ACID OH w/ 1K gals DOWN IPC TBG.
****

247 - 2991' 7.875 " OD HOLE

0 - 2945' 2.375" OD 4.70#/ft J-55 TBG IPC

2945 - 2948' RETRV. PACKER BAKER AD-1

0 - 2991' 5.5" OD 15.50#/ft J-55 PROD CSG

2991 - 3250' 4.75 " OD HOLE

KB ELEV: 3325'
TD: 3250'

TEXACO E & P INC.
COOPER JAL UNIT NO. 219
API# 3002509622

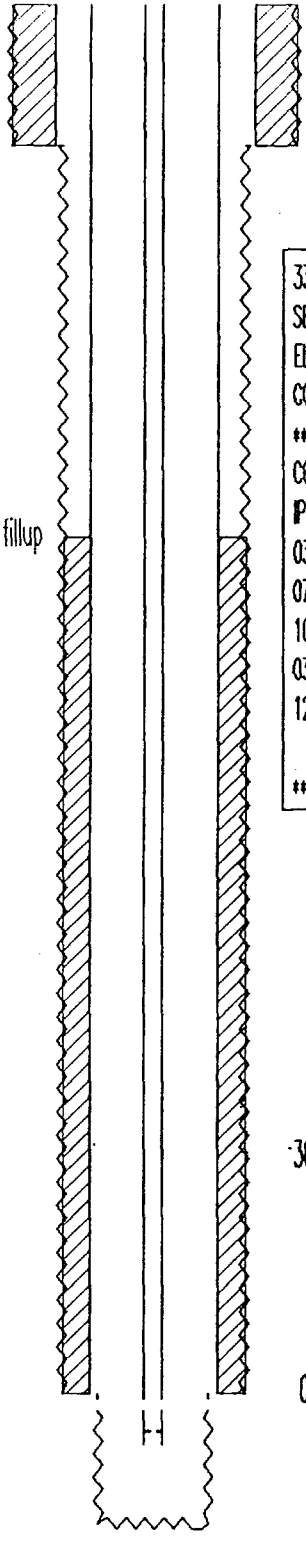

0 - 300' CEMENT 300sx Circ.

1140 - 2987' CEMENT 350sx Calc. w/ 75% fillup

0 - 300' 12.25 " OD HOLE

0 - 300' 8.625" OD 28.00#/ft J-55 SURF CSG

330 FSL & 660 FEL
SEC 24 , TWN 24 S, RANGE 36 E
ELEVATION: 3299 GL
COMPLETION DATE: 12-24-49
****
COMPLETION INTERVAL: 2987 - 3208 (YATES-OH)
IP: 58 BOPD, 90 MCFD, 0 BWPD (FL)
03-10-59 C/O FILL TO 3208'.
07-20-66 C/O FILL 3065-3195 (130' FILL).
10-04-74 C/O FILL TO 3208'.
03-17-76 TAG FILL @ 3200'.
12/08/87 C/O FILL 3130-3150' w/ BAILER. COULD NOT GET BELOW 3150' DUE TO LEDGE.
****

300 - 2987' 7.875" OD HOLE

0 - 3063' 2.375" OD 4.70#/ft J-55 TBG
3037 - 3038' SEATING NIPPLE

0 - 2987' 5.5" OD 14.00#/ft J-55 PROD CSG

2987 - 3208' 4.75 " OD HOLE

KB ELEV: 3309'
TD: 3208'

TEXACO E & P INC.
COOPER JAL UNIT NO. 220
API# 3002511162

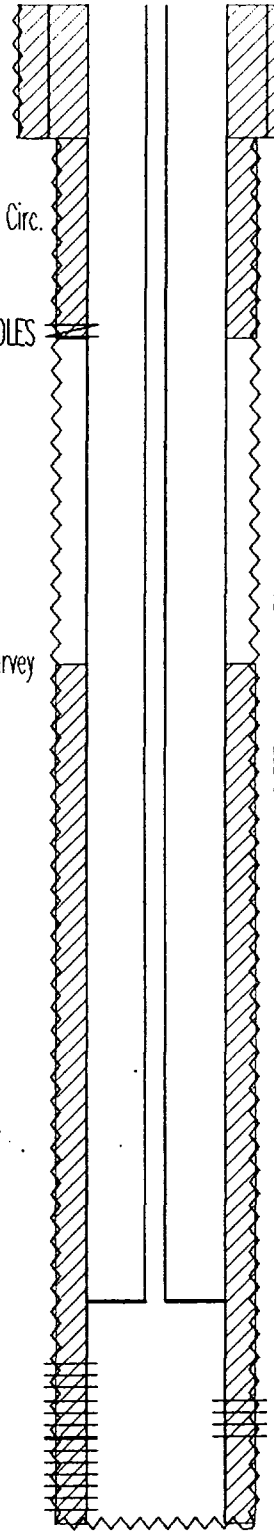

0 - 291' CEMENT 175sx Circ.

0 - 735' CEMENT 375sx SQZD Thru Holes, Circ.

697 - 729' SQUEEZE PERFS 5-1/2" CSG HOLES

1450 - 3350' CEMENT 1000sx TOC by Temp. Survey

0 - 291' 11 " OD HOLE

0 - 291' 8.625" OD 22.70#/ft J-55 SURF CSG

660 FSL & 628 FWL
SEC 19 , TWN 24 S, RANGE 37 E
ELEVATION: 3284 GL
COMPLETION DATE: 03-22-50
****
COMPLETION INTERVAL: 3060 - 3158 (YATES)
TRT : ACID 1K gals
IP: 84 BOPD, 63.7 MCFD, 0 BWPD (FL)
07-02-71 CONVERTED TO INJECTION
11-08-76 INJ. SURVEY. FILL @ 3136'. NO FLUID BELOW 3065'.
10-25-87 CMT SQZD CSG LEAK 697-729.
PERFED JALMAT 2986-3050 & 3160-3320, 56 HOLES; ACID 7K gals, 4 STAGES. INSTALLED NEW INJ. TBG.
****

291 - 3350' 7.875 " OD HOLE

0 - 2860' 2.375" OD 4.70#/ft J-55 TBG CMT LINED

2860 - 2863' RETRV. PACKER BAKER AD-1

2986 - 3050' PERFS 1 SPF (26 HOLES)

3060 - 3158' PERFS 4 SPF (392 HOLES)

3160 - 3320' PERFS 1 SPF (30 HOLES)

KB ELEV: 3294'

TD: 3350'

0 - 3350' 5.5" OD 15.50#/ft J-55 PROD CSG

TEXACO E & P INC.
COOPER JAL UNIT NO. 221
API# 3002511160

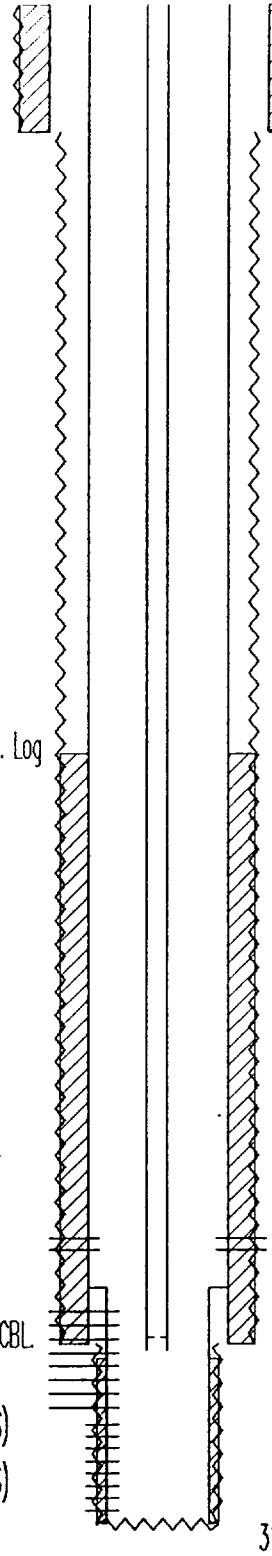

0 - 314' CEMENT 175sx Circ.

1855 - 3320' CEMENT 450sx TOC by Temp. Log

3045 - 3090' PERFS 4 SPF (140 HOLES)

3358 - 3765' CEMENT 30sx TOC by CBL.

3241 - 3480' PERFS 1 SPF (14 HOLES)

3522 - 3735' PERFS 1 SPF (16 HOLES)

KB ELEV: 3284'

TD: 3770'

0 - 314' 11 " OD HOLE

0 - 314' 8.625" OD 32.00#/ft J-55 SURF CSG

660 FSL & 1916 FWL
SEC 19 , TWN 24 S, RANGE 37 E
ELEVATION: 3274 GL
COMPLETION DATE: 09-16-49
###
COMPLETION INTERVAL: 3045 - 3090 (YATES)
TRT : ACID 500 gals
IP: 258 BOPD, 306 MCFD, 0 BWPD (FL)
10-19-49 NMOCD ORDERED CMT SQZ. PERFED 3 HOLES
@ 1200. CMT SQZD w/ 450sx.
11-25-55 PERF 3105-3120. ACID 500 gals; FRAC
NEW INT. 15K gals OIL / 15K # sd.
08-30-73 PLACED ON ROD PUMP.
10-05-76 UPGRADED TP 228D PU.
03-11-83 DEEPENED TO 3770'. SET 4" LINER.
PERF 3522-3735, 16 HOLES. ACID 1.2K gals
FRAC 24K gals / 40K # 20/40 sd.
PERF 3241-3480, 14 HOLES. ACID 1.2K gals
FRAC 24K gals / 40K # 20/40 sd.
01-19-84 C/O FILL 3615-3755. FOAM ACID JOB.
40K gals 80 QUALITY JOB. (6.4K gals ACID,
1.6K gals METHANOL & 500 MCF N2. 3 STAGES)
06-22-88 C/O FILL 3438-3726'.
01-14-89 C/O BRIDGE 3443-3481' & FILL 3686-3726'.
###

314 - 3320' 7.625" OD HOLE

0 - 3336' 2.375" OD 4.70#/ft J-55 TBG

3304 - 3305' SEATING NIPPLE

0 - 3320' 5.5" OD 15.50#/ft J-55 PROD CSG

3320 - 3770' 4.75" OD HOLE

3184 - 3769' 4" OD 11.00#/ft FL35 J-55 LINER

TEXACO E & P INC.
COOPER JAL UNIT NO. 222
API# 3002509671

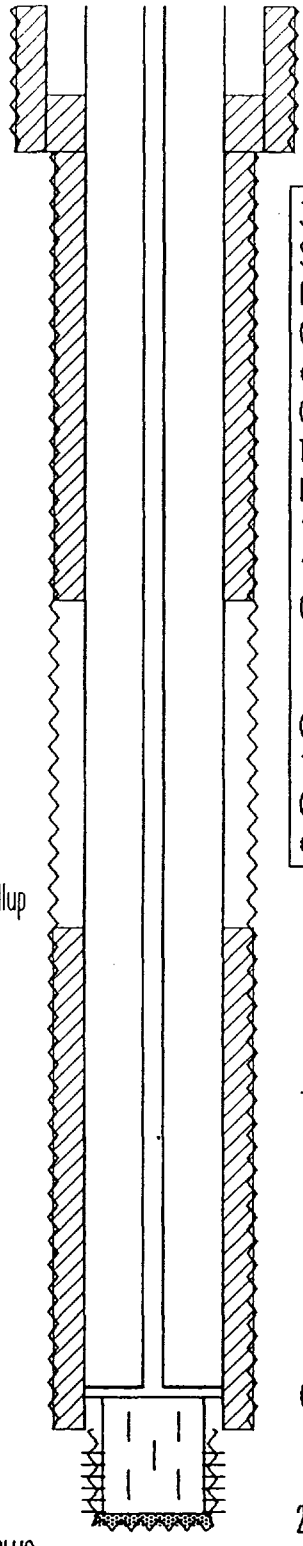

0 - 305' CEMENT 150sx Circ.

185 - 1248' CEMENT 200sx Thru DV Tool

1935 - 2990' CEMENT 200sx Calc. w/ 75% fillup

3026 - 3165' PERFS 270 Qts NITRO

3168 - 3193' SAND PLUG

KB ELEV: 3327'

TD: 3193'

0 - 305' 11 " OD HOLE

0 - 305' 8.625" OD 24.00#/ft J-55 SURF CSG

330 FNL & 330 FEL
SEC 26 , TWN 24 S, RANGE 36 E
ELEVATION: 3317 GL
COMPLETION DATE: 03-02-51
###
COMPLETION INTERVAL: 2990 - 3193 (YATES-OH)
TRT : 270 QTS NITRO 3026 - 3165'
IP: 268 BOPD, 398 MCFD, 0 BWPD (FL)
10-15-52 C/O FILL 3031 - 3169'.
12-07-52 HYDRAFRAC w/ 3K gals.
07-02-55 C/O 21' FILL TO 3165'. FRAC 20K gals OIL /
20K # 20/40 & 1K # 10/20.
C/O TO 3168'. SET 4" SLOTTED LINER.
06-30-71 CONVERTED TO INJECTION.
12-23-74 CHANGED OUT SEVERAL BAD TBG JOINTS.
01-30-76 REPLACED BAD PKR.
###

305 - 2990' 7.875 " OD HOLE

0 - 2900' 2.375" OD 4.70#/ft J-55 TBG CMT LINED

2900 - 2903' RETRV. PACKER BAKER AD-1

0 - 2990' 5.5" OD 15.50#/ft J-55 PROD CSG

2990 - 3193' 4.75 " OD HOLE

2924 - 3168' 4" OD 12.60#/ft FJ J-55 SLOTTED LINER

TEXACO E & P INC.
COOPER JAL UNIT NO. 223
API# 3002509648

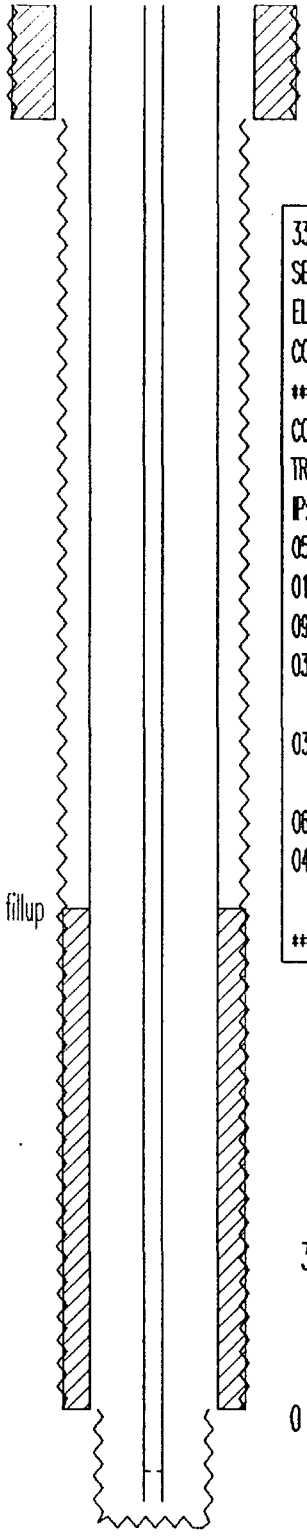

0 - 240' CEMENT 160sx Circ.

0 - 240' 12.25" OD HOLE

0 - 240' 8.625" OD 28.00#/ft J-55 SURF CSG

330 FNL & 990 FWL
SEC 25 , TWN 24 S, RANGE 36 E
ELEVATION: 3310 GL
COMPLETION DATE: 12-05-50
****
COMPLETION INTERVAL: 2950 - 3188 (YATES-OH)
TRT : 240 QTS. NITRO
IP: 65 BOPD, 72 MCFD, 0 BWPD (FL)
05-13-54 C/O FILL TO TD (3188').
01-01-62 WELL SI MOST OF YEAR.
09-28-76 TAGGED FOR FILL . NONE FOUND.
03-16-78 C/O CALCIUM SULFATE 3044-3188'. SPOTTED
CONVERTER; ACID 1.5K gals. SCALE SQZD.
03-20-79 C/O FILL TO TD (3188'). ACID 2K gals;
FRAC 50K gals / 68K # 20/40 (IN 3 STAGES).
06-10-85 C/O TO 3037'. RECOVERED FISH LOST IN HOLE.
04-15-89 C/O & JET WASH OH TO TD (3188'). FILL @ 3058'.
ACID 2.5K gals - 3 STAGES w/ 750# RS BLOCKS.
****

1895 - 2950' CEMENT 200sx Calc. w/ 75% fillup

240 - 2950' 7.875 " OD HOLE

0 - 3144' 2.375" OD 4.70#/ft J-55 TBG

3080 - 3081' SEATING NIPPLE

0 - 2950' 5.5" OD 14.00#/ft J-55 PROD CSG

2950 - 3188' 4.75 " OD HOLE

KB ELEV: 3318'

TD: 3188'

TEXACO E & P INC.
COOPER JAL UNIT NO. 224
API# 3002509646

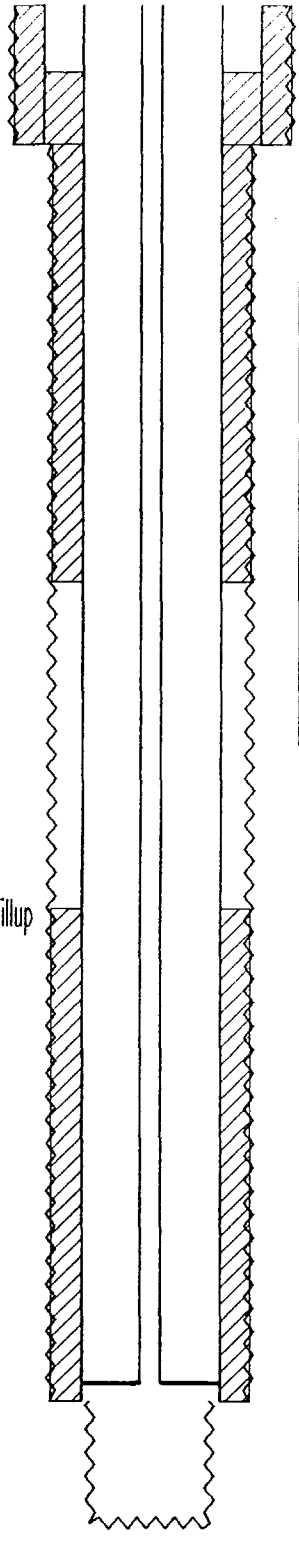

0 - 292' CEMENT 100sx Circ.

140 - 1225' CEMENT 200sx Thru DV Tool

1920 - 2970' CEMENT 200sx Calc w/ 75% fillup

0 - 292' 11 " OD HOLE

0 - 292' 8.625" OD 28.00#/ft H-40 SURF CSG

330 FNL & 2310 FWL
SEC 25 , TWN 24 S, RANGE 36 E
ELEVATION: 3309 KB
COMPLETION DATE: 06-02-50
****
COMPLETION INTERVAL: 2970 - 3230 (JALMAT)
IP: 52 BOPD, 0 MCFD, 0 BWPD (FLOWING)
06-16-71 CONVERTED TO INJECTION
05-14-89 CO, SIDE JET & ACIDIZE W/ 4K GALS
****

292 - 2970' 7.875 " OD HOLE

0 - 2930' 2.375" OD 4.70#/ft J-55 TBG Flourolined

2930 - 2934' LATCH-IN PACKER

0 - 2970' 5.5" OD 14.00#/ft H-40 PROD CSG

2970 - 3230' 4.75 " OD HOLE

KB ELEV: 3309'
TD: 3230'

TEXACO E & P INC.
COOPER JAL UNIT NO. 225
API# 3002509650

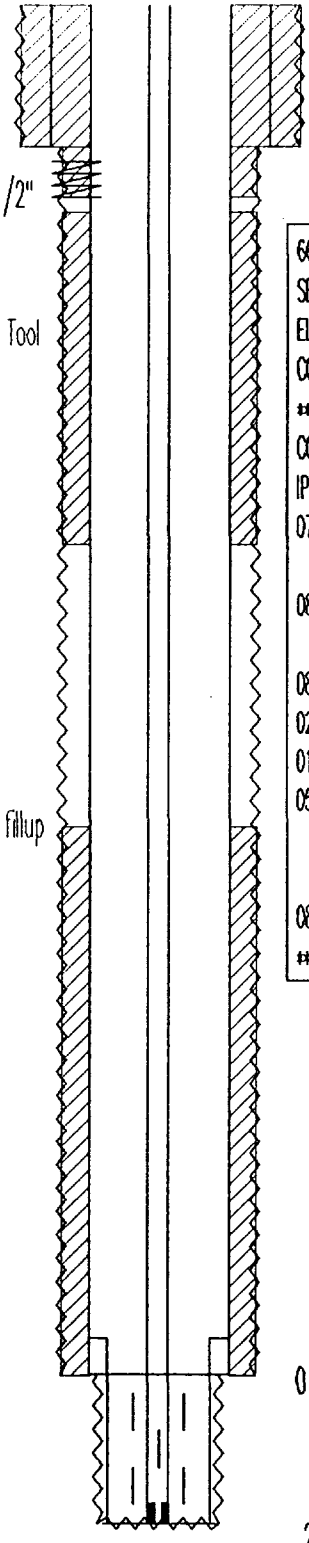

0 - 307' CEMENT 125sx Circ.

0 - 417' CEMENT 125sx Circ thru Csg Holes.

323 - 417' SQUEEZE PERFS SQZD HOLES IN 5-1/2"

450 - 1174' CEMENT 150sx Thru DV Tool

1795 - 2996' CEMENT 200sx Calc. w/ 75% fillup

KB ELEV: 3310'

TD: 3318'

0 - 307' 11 " OD HOLE

0 - 307' 8.625" OD 32.00#/ft J-55 SURF CSG

660 FNL & 1650 FEL
SEC 25 , TWN 24 S, RANGE 36 E
ELEVATION: 3301 GL
COMPLETION DATE: 01-09-50
****
COMPLETION INTERVAL: 2996 - 3188 (YATES-OH)
IP: 49 BOPD, 91 MCFD, 0 BWPD (FL)
07-21-54 DEEPEDEN TO 3318'. FRAC 14K gals OIL /
21K # sd. SURVEY INDICATED FRAC INTO U. YATES
08-25-54 ATT. TO FRAC L. YATES. (3287-3318');
FRAC 2.75K gals OIL / 5.25K # sd.
08-28-73 C/O TO TD (3318') & PLACE ON ROD PUMP.
02-21-74 INSTALLED LARGER 228D PU.
01-27-76 TAGGED FILL @ 3095'. NO C/O.
05-14-83 CMT SQZD 5-1/2" CSG LEAK 323-417'.
C/O 3064'-3318'. (HAD TO REPEAT TWICE).
INSTALLED 4" SLOTTED LINER.
08-14-85 C/O FILL TO TD (3318').
****

307 - 2996' 7.625" OD HOLE

0 - 3305' 2.375" OD 4.70#/ft J-55 TBG

3274 - 3274' SEATING NIPPLE

2914 - 2994' 4" OD 10.64#/ft J-55 LINER

0 - 2996' 5.5" OD 15.50#/ft J-55 PROD CSG

2996 - 3318' 4.75 " OD HOLE

2994 - 3318' 4" OD 10.64#/ft J-55 SLOTTED LINER

TEXACO E & P INC.
COOPER JAL UNIT NO. 226
API# 3002509651

0 - 310' CEMENT 100sx Circ.

80 - 1137' CEMENT 200sx Thru DV Tool

0 - 310' 11 " OD HOLE

0 - 310' 8.625" OD 28.00#/ft J-55 SURF CSG

330 FNL & 330 FEL
SEC 25 , TWN 24 S, RANGE 36 E
ELEVATION: 3287 GL
COMPLETION DATE: 05-16-50
###
COMPLETION INTERVAL: 2989 - 3223 (YATES-OH)
IP: 88 BOPD, 125 MCFD, 0 BWPD (FL)
12-29-68 C/O FILL 3156 - 3214'.
04-08-69 C/O FILL 3140 - 3214'.
05-20-71 CONVERTED TO INJECTION. SWEDGED OUT 5-1/2" CSG @ 337', 481', 515', 1064', & 1287'.
11-09-76 INJ SURVEY. FILL @ 3003'. 100% INJ. GOING BELOW 3003'.
11-24-76 C/O FILL 3003-3223'. JET WASH OH 2989-3223'. TIGHT SPOT IN 5-1/2" @ 1287'.
###

1935 - 2989' CEMENT 200sx Calc w/ 75% fillup

310 - 2989' 7.875 " OD HOLE

0 - 2967' 2.375" OD 4.70#/ft J-55 TBG CMT LINED

2967 - 2970' RETRV. PACKER BAKER AD-1

0 - 2989' 5.5" OD 15.00#/ft J-55 PROD CSG

2989 - 3223' 4.75 " OD HOLE

KB ELEV: 3297'
TD: 3223'

TEXACO E & P INC.
COOPER JAL UNIT NO. 227
API# 3002511291

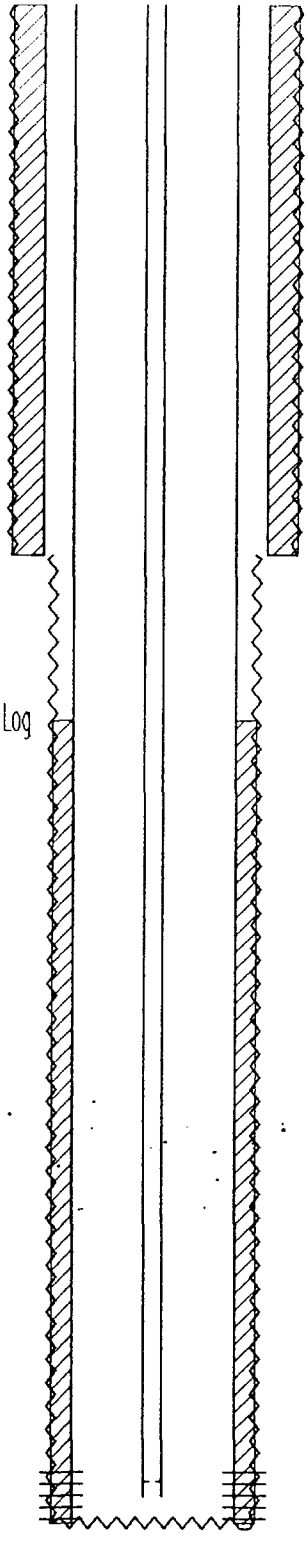

0 - 1139' CEMENT 600sx Circ.

0 - 1139' 12.25 " OD HOLE

0 - 1139' 9.625" OD 32.00#/ft J-55 SURF CSG

1480 - 3148' CEMENT 400sx TOC by Temp. Log

660 FNL & 660 FWL
SEC 30 , TWN 24 S, RANGE 37 E
ELEVATION: 3274 GL
COMPLETION DATE: 07-02-50
***
COMPLETION INTERVAL: 3040 - 3140 (YATES)
TRT : ACID 500 gals
IP: 59 BOPD, 69 MCFD, 0 BWPD (FL)
07-01-74 TAGGED FILL 3140'. DID NOT C/O.
10-06-75 C/O 3128 - 3145'.
***

1139 - 3148' 8.75" OD HOLE

0 - 3092' 2.375" OD 4.70#/ft J-55 TBG

3062 - 3063' SEATING NIPPLE

3040 - 3140' PERFS 6 SPF (600 HOLES)

0 - 3148' 7 " OD 20.00#/ft J-55 PROD CSG

KB ELEV: 3285'
TD: 3148'

TEXACO E & P INC.
COOPER JAL UNIT NO. 228
API# 3002511290

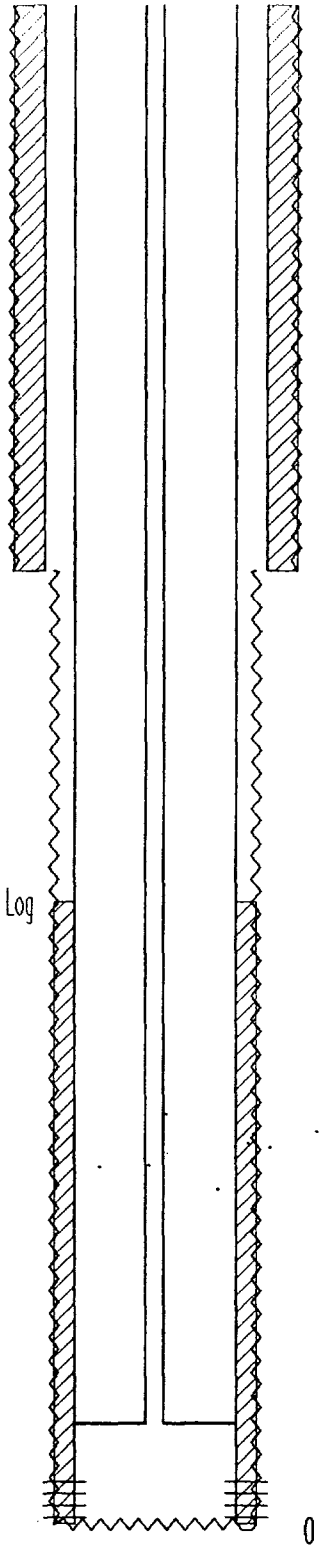

0 - 1164' 12.25 " OD HOLE

0 - 1164' CEMENT 600sx Circ.

0 - 1164' 9.625" OD 32.00#/ft J-55 SURF CSG

660 FNL & 1917 FWL
SEC 30 , TWN 24 S, RANGE 37 E
ELEVATION: 3267 GL
COMPLETION DATE: 11-24-49
****
COMPLETION INTERVAL: 3040 - 3120 (YATES)
TRT: ACID 1000 gals
IP: 63 BOPD, 74 MCFD, 0 BWPD (FL)
04-30-74 CONVERTED TO INJECTION
ACID 3K gals - 2 STAGES
03-18-76 REPLACED BAD TBG. JOINTS
11-08-76 RAN INJ. SURVEY. FILL @ 3086'.
NO FLOW BELOW 3081'.
08-11-88 SI DUE TO TBG LEAK.
10-20-88 C/O FILL 3051-3125'. RECOVERED SCALE & IRON SULFIDE. ACID W/ 2.5K gals w/ 2% NS.
RAN NEW CMT LINED TBG STRING.
****

1845 - 3133' CEMENT 400sx TOC by Temp. Log

1164 - 3134' 8.75" OD HOLE

0 - 2924' 2.375" OD 4.70#/ft J-55 TBG CMT LINED

2924 - 2927' RETRV. PACKER BAKER AD-1

3040 - 3120' PERFS 6 SPF (480 HOLES)

0 - 3133' 7 " OD 20.00#/ft J-55 PROD CSG

KB ELEV: 3278'
TD: 3134'

TEXACO E & P INC.
COOPER JAL UNIT NO. 229
API# 3002509647

230 - 1014' CEMENT 250sx Calc. w/ 75% fillup

0 - 2755' CEMENT 1027sx Calc at Surface

1650 FNL & 990 FWL
SEC 25 , TWN 24 S, RANGE 36 E
ELEVATION: 3312 GL
COMPLETION DATE: 05-31-47

WAS DST'd - PLUGGED & ABANDONED.

08-15-50 RE-ENTERED WELL. C/O TO 3170'.
SET 5-1/2" LINER IN "DOW" PLASTIC.
COMPLETION INTERVAL: 2960 - 3170 (YATES-OH)
TRT : 280 QTS NITRO 3020 - 3160'.
IP: 82 BOPD, 71 MCFD, 0 BWPD (FL)
10-15-75 C/O 3038-3182'.
10-18-75 C/O 3092-3182'.
****

2660 - 2960' CEMENT "DOW PLASTIC"

3020 - 3160' PERFS 280 QTS NITRO

3182 - 3700' CEMENT PLUG

0 - 1014' 13" OD HOLE

0 - 1014' 10.75" OD 40.00#/ft J-55 SURF CSG

1014 - 2755' 9.875" OD HOLE

0 - 2960' 2.375" OD 4.70#/ft J-55 TBG

2952 - 2953' SEATING NIPPLE

0 - 2755' 7" OD 20.00#/ft J-55 PROD CSG

2660 - 2960' 5.5" OD 15.00#/ft J-55 LINER

2755 - 3700' 6.25" OD HOLE

KB ELEV: 3320'
PBTD: 3182'
TD: 3700'

TEXACO E & P INC.
COOPER JAL UNIT NO. 230
API# 3002509649

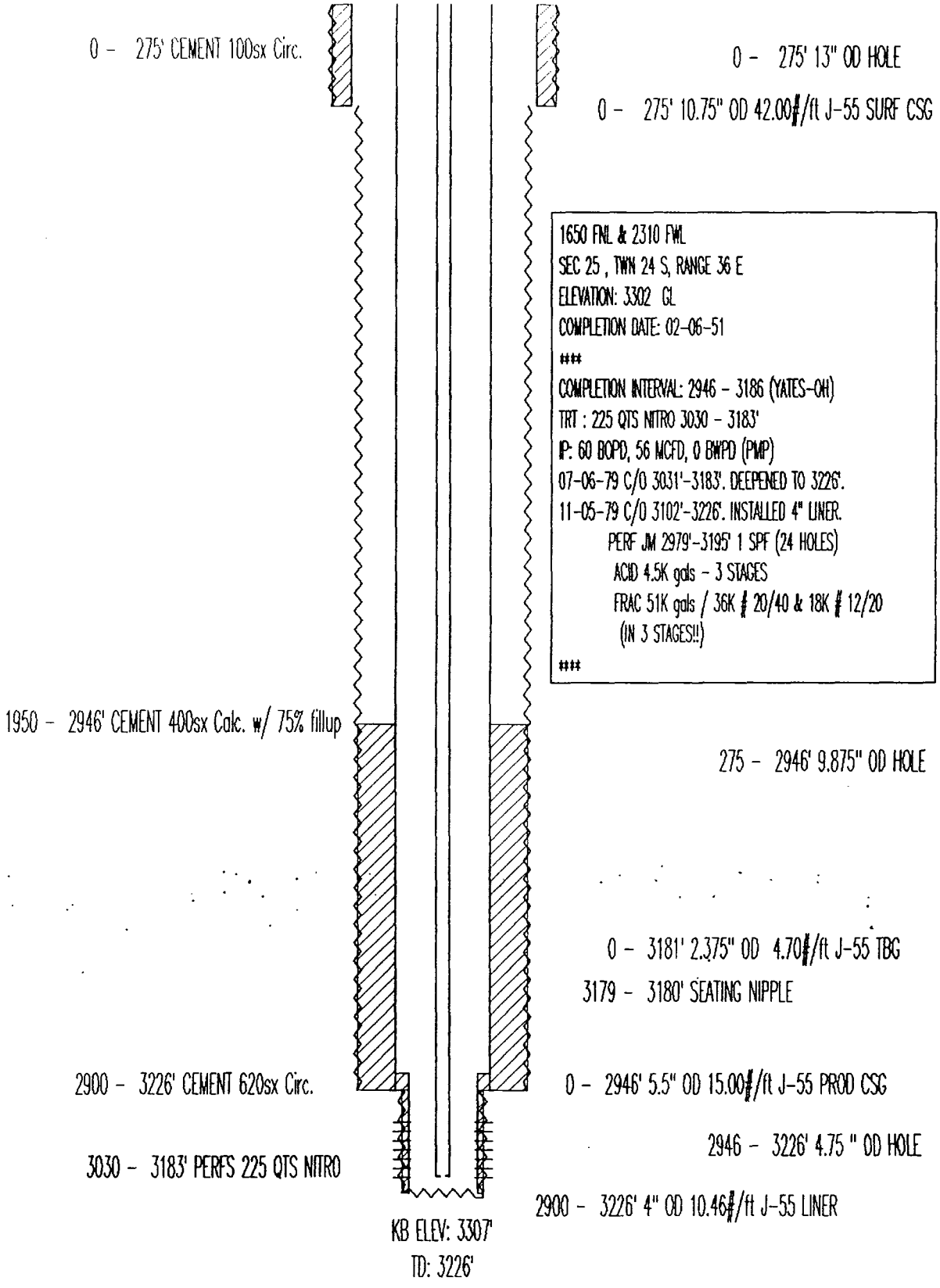

TEXACO E & P INC.
COOPER JAL UNIT NO. 231
API# 3002509652

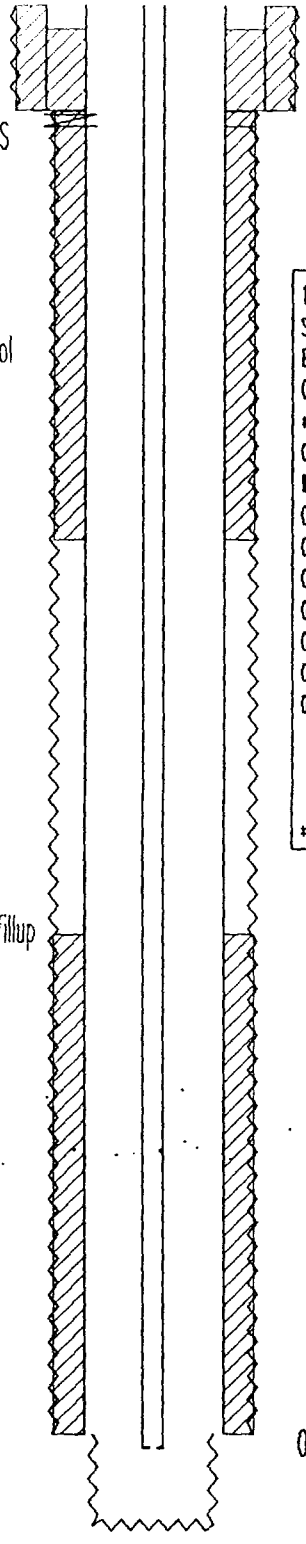

0 - 222' CEMENT 100sx Circ.

225 - 255' CEMENT 75sx SQZD THRU HOLES.

225 - 255' SQUEEZE PERFS 5-1/2" CSG HOLES

50 - 1122' CEMENT 200sx Thru DV Tool

1950 - 3002' CEMENT 200sx Calc. w/ 75% fillup

0 - 222' 11 " OD HOLE

0 - 222' 8.625" OD 28.00#/ft J-55 SURF CSG

1650 FNL & 330 FEL
SEC 25 , TWN 24 S, RANGE 36 E
ELEVATION: 3281 GL
COMPLETION DATE: 04-05-51
###
COMPLETION INTERVAL: 3002 - 3192 (YATES-OH)
IP: 66 BOPD, 94 MCFD, 0 BWPD (FL)
05-14-53 C/O FILL 3055'-3192'.
01-09-69 C/O FILL 3055'-3180'.
09-03-72 PLACED WELL ON PMP.
07-01-75 C/O MUD ANCHOR.
09-08-79 C/O FILL 3051'-3130'
02-17-87 C/O FILL 3099'-3192'.
03-07-88 CMT SQZD 5-1/2" CSG LEAK 225'-255'.
C/O FILL 3162'-3192'; ACID 4.5K gals w/ 1K # RS.
FRAC 32K gals / 62K # 12/20 sd. (IN 2 EQUAL
STAGES ROCK SALT BLOCKS!! MAX CONC. 5 ppg)
###

222 - 3002' 7.875 " OD HOLE

0 - 3031' 2.375" OD 4.70#/ft J-55 TBG

3029 - 3030' SEATING NIPPLE

0 - 3002' 5.5" OD 14.00#/ft J-55 PROD CSG

3002 - 3192' 4.75 " OD HOLE

KB ELEV: 3288'

TD: 3192'

TEXACO E & P INC.
COOPER JAL UNIT NO. 232
API# 3002511289

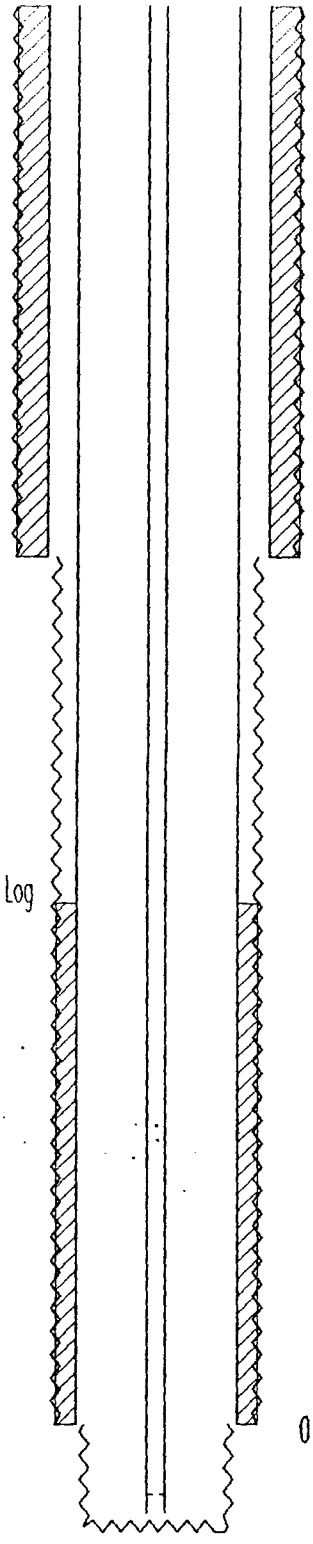

0 - 1132' CEMENT 547sx Circ.

0 - 1132' 12.25 " OD HOLE

0 - 1132' 9.625" OD 36.00#/ft J-55 SURF CSG

1980 FNL & 1917 FWL
SEC 30 , TWN 24 S, RANGE 37 E
ELEVATION: 3260 GL
COMPLETION DATE: 10-12-49
***
COMPLETION INTERVAL: 2920 - 3130 (YATES-OH)
IP: 77 BOPD, 2,695 MCFD, 0 BWPD (FL)
07-01-63 NMOCD RE-CLASSIFIED AS GAS WELL.
05-10-65 SI. WOULD NOT FLOW AGAINST H.P. GAS LINE.
06-21-74 C/O FILL 3114 - 3130'.
12-19-74 SWABBED WELL TO RESTORE PROD.
03-28-75 C/O PARAFFIN IN TBG.
08-20-76 ACID 1K gals w/ 4 DRUMS CALCIUM SCALE TRT.
11-19-76 C/O 3120-3130'. SIDE JET 2920-3130'.
FRAC 40K gals / 31K # 20/40 & 9K # 10/20.
(3 STAGE JOB w/ ROCK SALT BLOCKS!!)
***

1846 - 2920' CEMENT 400sx TOC by Temp. Log

1132 - 2920' 8.75" OD HOLE

0 - 3101' 2.375" OD 4.70#/ft J-55 TBG

3064 - 3065' SEATING NIPPLE

0 - 2920' 7 " OD 20.00#/ft J-55 PROD CSG

2920 - 3130' 6.25" OD HOLE

KB ELEV: 3269'
TD: 3130'

TEXACO E & P INC.
COOPER JAL UNIT NO. 234
API# 3002509561

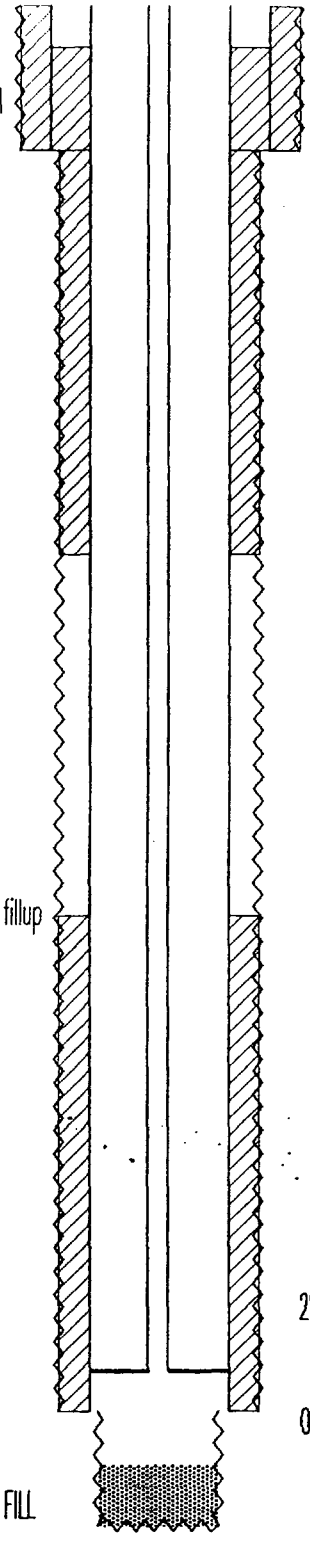

0 - 304' CEMENT 125sx Circ.

85 - 1161' CEMENT 200sx Thru DV Tool

0 - 304' 11 " OD HOLE

0 - 304' 8.625" OD 28.00#/ft J-55 SURF CSG

330 FSL & 1650 FEL
SEC 13 , TWN 24 S, RANGE 36 E
ELEVATION: 3315 GL
COMPLETION DATE: 06-06-50
****
COMPLETION INTERVAL: 2985 - 3228 (YATES/7 RVRS-OH)
IP: 48 BOPD, 54 MCFD, 0 BWPD (FL)
06-01-65 T&A'd WELL
08-01-71 CONVERTED TO INJECTION; C/O FILL
TO 3150' (hole cont. to cave in)
09-01-81 RAN INJ PROFILE. FILL @ 3101'
****

1930 - 2985' CEMENT 200sx Calc. w/ 75% fillup

304 - 2985' 7.875 " OD HOLE

0 - 2897' 2.375" OD 4.70#/ft TBG CMT LINED

2897 - 2900' LATCH-IN PACKER

0 - 2985' 5.5" OD 14.00#/ft J-55 PROD CSG

3101 - 3228' SAND FILL

2985 - 3228' 4.75 " OD HOLE

KB ELEV: 3325'

TD: 3228'

TEXACO E & P INC.
COOPER JAL UNIT NO. 237
API# 3002509610

657' FSL & 1980' FEL
SEC 23 , TWN 24 S, RANGE 36 E
ELEVATION: 3334 GL
COMPLETION DATE: 11-09-34
****
COMPLETION INTERVAL: 3349 - 3470 (7 RVRS/QUEEN)
IP: 0 BOPD, 7,500 MCFD, 0 BWPD (FL) FTP = 1800 psig
06-23-35 PULLED 7" LINER. RAN 7" SURF. - 3400'.
DRILLED 3400 - 3500'.
IP: 1272 BOPD, 612 MCFPD, 0 BWPD FTP = 225 psig
01-30-37 PB TO 3450' w/ CMT.
11-24-39 PB TO 3310'. PERFED 3233-3300' (20 HOLES)
AOF = 10.0 MMCFPD.
04-15-43 PB w/ CMT RET. @ 3200'. SQZD OLD PERFS w/ 60sx.
PERF 3060 - 3120' (57 HOLES); ACID 500 gals
IP: 0 BOPD, 4,500 MCFPD, 0 BWPD FTP = 275 psig
08-01-52 4-PT TEST. AAOF = 5.6 MMCFPD; SIWHP = 915 psig
12-09-53 PROD. LOG SHOWED MAJOR ENTRY 3113-20'. SET CMT
RET. @ 3090'. SQZD 3060-3120 w/ 38sx. C/O TO
3090'. PERF 3060-3090 4SPF. ACID 5K gals.
SET CMT RET. 3050'. SQZD 3060-90.
PERF 2975-85, 3000-20 w/ 2SPF. ACID 1K gals;
FRAC 4K gals OIL & 6K # sd. IP : 419 MCFPD
04-66-66 ACID (2975-3020) 1K gals (UNSUCCESSFUL)
WELL WAS T&A'd.
05-25-71 CONVERTED TO INJECTION. C/O FILL 3019-3040'.
05-20-73 SQZD PERFS 2975-3020 w/ 300sx (2 JOBS).
C/O TO 3187'. PERF 3057-62, 70-82, 3094-3120,
3134-44, 3148-54 (1 SPF - 59 HOLES).
ACID 2.5K gals.
09-09-76 C/O CMT. 3180 - 3270'. PERF 3190-3202, 3212-16,
3226-32 & 3251-55 (2 SPF-Thru Tbg GUN - 60 HOLES)
NON-COMMERCIAL (100% WTR). CIBP @ 3160 w/ 9' CMT.
****

0 - 309' CEMENT 130sx Circ.

0 - 309' 15.5" OD HOLE

0 - 309' 13.375" OD 54.00#/ft J-55 SURF CSG

0 - 2789' CEMENT 800sx Circ.

309 - 2789' 10.625" OD HOLE

0 - 3022' 2.375" OD 4.70#/ft J-55 TBG CMT LINED

3022 - 3025' RETRV. PACKER BAKER AD-1

2335 - 3400' CEMENT 175sx Calc. w/ 75% fillup

0 - 2789' 9.625" OD 36.00#/ft J-55 INT CSG

2975 - 2985' SQUEEZE PERFS 2 SPF (60 HOLES)

3057 - 3154' PERFS 1 SPF 6 INT (59 HOLES)

3190 - 3202' ABANDONED PERFS 2 SPF, 4 INT (54 HOLES)

0 - 3400' 7" OD 24.00#/ft J-55 PROD CSG

2798 - 3602' 8.75" OD HOLE

3000 - 3020' SQUEEZE PERFS 2 SPF 40 HOLES)

3060 - 3090' SQUEEZE PERFS 4 SPF (120 HOLES)

3060 - 3120' SQUEEZE PERFS 57 HOLES

3233 - 3300' SQUEEZE PERFS 20 HOLES

3151 - 3160' CEMENT PLUG

3160 - 3163' CIBP

3270 - 3310' CEMENT PLUG

3310 - 3400' CEMENT PLUG

3400 - 3602' CEMENT PLUG

KB ELEV: 3340'

PBTD: 3151'

TD: 3602'

TEXACO E & P INC.
COOPER JAL UNIT NO. 238
API# 3002509659

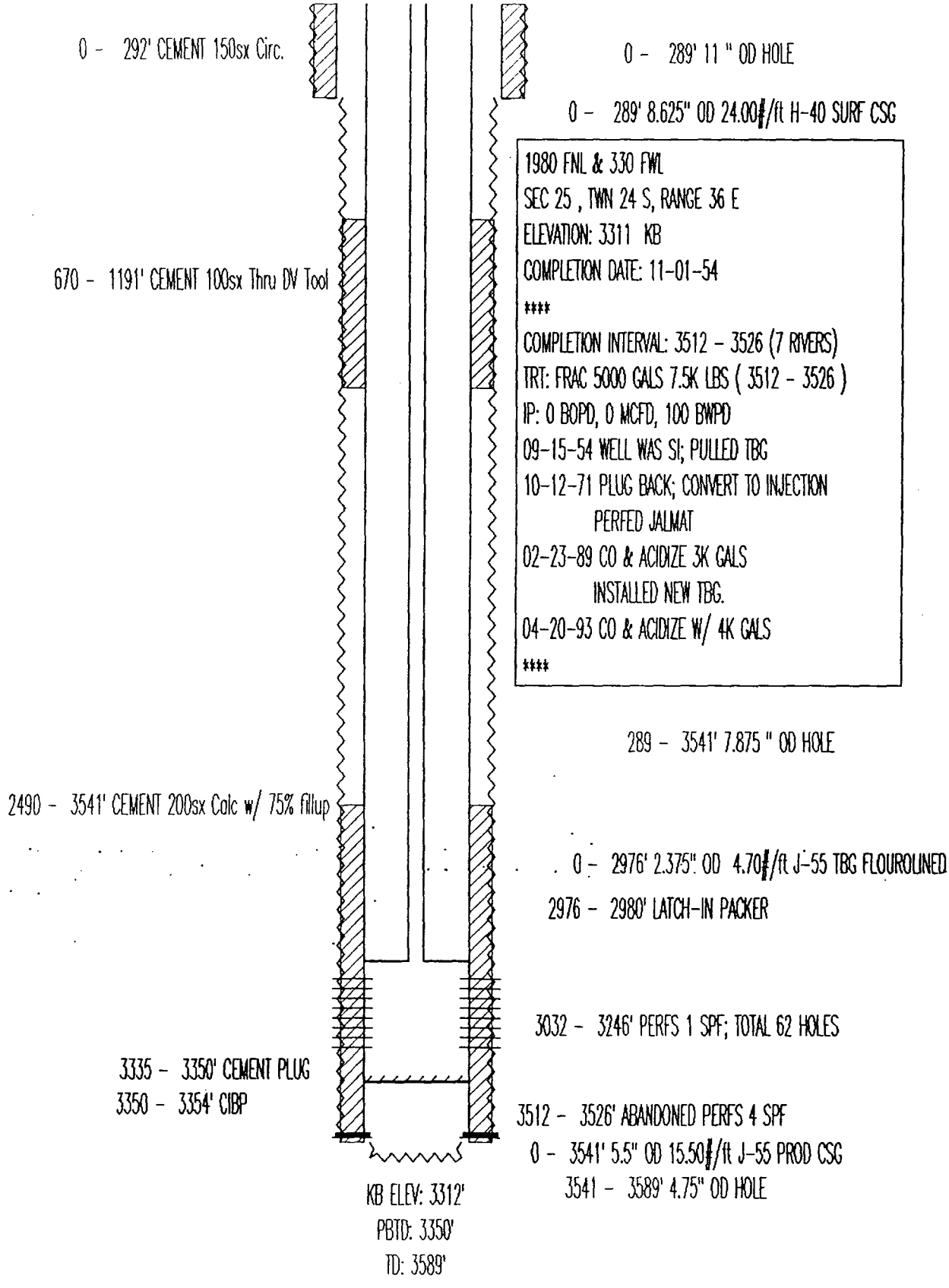

TEXACO E & P INC.
COOPER JAL UNIT NO. 239
API# 3002511288

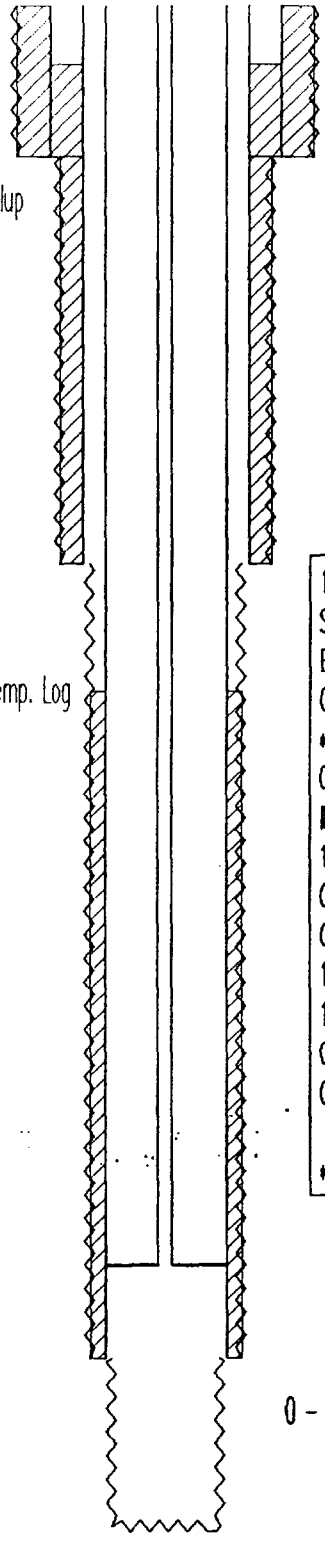

0 - 312' CEMENT 350sx Circ.

120 - 1164' CEMENT 500sx Calc. w/ 75% fillup

1430 - 2828' CEMENT 450sx TOC by Temp. Log

0 - 312' 17.25" OD HOLE

0 - 312' 13.375" OD 48.00#/ft J-55 SURF CSG

312 - 1164' 12.25 " OD HOLE

0 - 1164' 9.625" OD 32.00#/ft J-55 INT CSG

1980 FNL & 660 FWL
SEC 30 , TWN 24 S, RANGE 37 E
ELEVATION: 3268 GL
COMPLETION DATE: 07-16-49
***
COMPLETION INTERVAL: 2828 - 3180 (YATES-OH)
IP: 36 BOPD, 116 MCFD, 0 BWPD (FL)
12-12-58 NMOCD STATUS CHANGED TO GAS.
07-18-68 SI.
05-04-74 CONVERTED TO INJECTION. C/O 2958-3180'.
11-09-76 INJ. SURVEY. FILL @ 3008'. NO C/O.
11-08-77 REPAIRED TBG LEAK.
03-17-80 C/O FILL 3008' - 3180'.
09-11-87 C/O FILL & 2906' - 3180'. JET WASH OH.
INSTALLED NEW CMT. LINED TBG.
***

1164 - 2828' 8.75" OD HOLE

0 - 2631' 2.375" OD 4.70#/ft J-55 TBG CMT LINED

2631 - 2634' RETRV. PACKER BAKER AD-1

0 - 2828' 7 " OD 20.00#/ft J-55 PROD CSG

2828 - 3180' 6.25" OD HOLE

KB ELEV: 3279'
TD: 3180'

TEXACO E & P INC.
COOPER JAL UNIT NO. 241
API# 3002509656

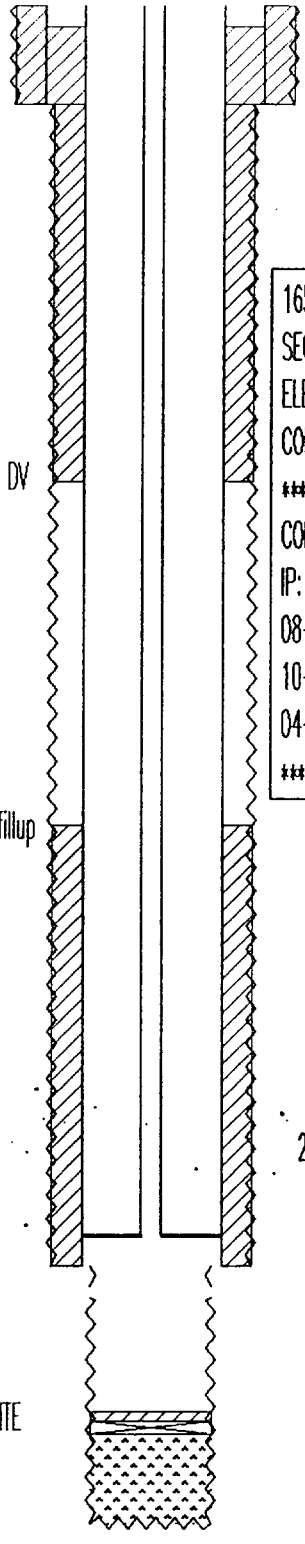

0 - 236' CEMENT 100sx Circ.

0 - 236' 11 " OD HOLE

0 - 236' 8.625" OD 28.00#/ft H-40 SURF CSG

1650 FNL & 1650 FEL
SEC 25 , TWN 24 S, RANGE 36 E
ELEVATION: 3288 KB
COMPLETION DATE: 08-01-51
****
COMPLETION INTERVAL: 3003 - 3580 (YATES;7 RVRS)
IP: 66 BOPD, 0 MCFD, 0 BWPD (FLOWING)
08-22-54 PLUGGED BACK TO JALMAT
10-29-75 CONVERTED TO INJECTION
04-15-93 CO, SIDE JET & ACIDIZE W/ 4K GALS
****

50 - 1132' CEMENT 200sx thru DV

1950 - 3003' CEMENT 200sx Calc. w/ 75% fillup

236 - 3003' 7.875 " OD HOLE

0 - 2929' 2.375" OD 4.70#/ft J-55 TBG

2929 - 2933' LATCH-IN PACKER

0 - 3003' 5.5" OD ~~14.00~~#/ft H-40 PROD CSG

17 to 20#

3316 - 3340' CEMENT HYDROMITE

3340 - 3369' PLUG CAL-SEAL

3369 - 3580' GRAVEL

3003 - 3580' 4.75 " OD HOLE

KB ELEV: 3298'

PBTD: 3316'

TD: 3580'

TEXACO E & P INC.
COOPER JAL UNIT NO. 242
API# 3002511149

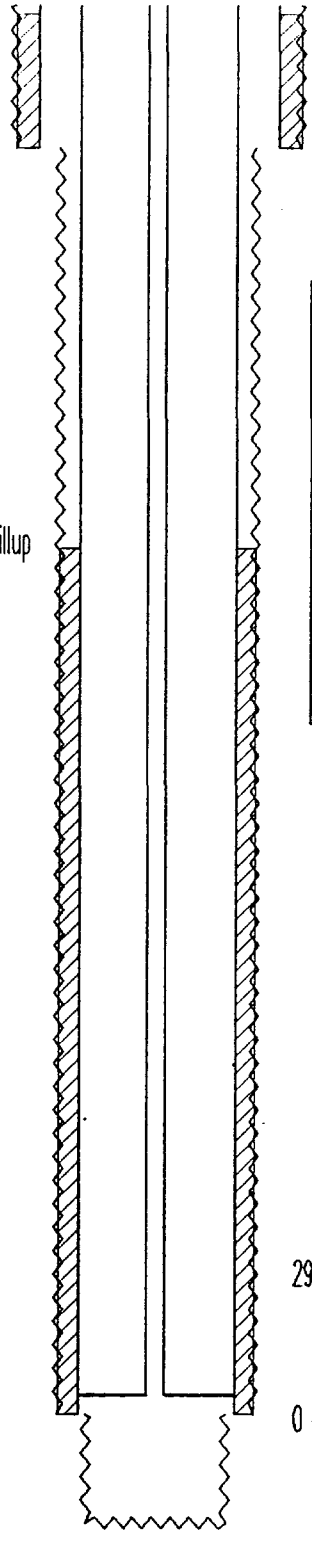

20 - 300' CEMENT 80sx Calc. w/ 75% fillup

0 - 300' 12.75" OD HOLE

0 - 300' 10.75" OD 32.00#/ft J-55 SURF CSG

990 FNL & 1587 FWL
SEC 19 , TWN 24 S, RANGE 37 E
ELEVATION: 3303 GL
COMPLETION DATE: 07-04-50
****
COMPLETION INTERVAL: 2962 - 3191 (YATES-OH)
IP: 66 BOPD, 88 MCFD, 0 BWPD (FL)
06-23-62 6 BOPD, 476 MCFPD, 0 BWPD
11-04-75 CONVERTED TO INJECTION
C/O FILL 3050 - 3191
****

1140 - 2963' CEMENT 300sx Calc. w/ 75% fillup

300 - 2963' 8.75" OD HOLE

0 - 2921' 2.375" OD 4.70#/ft J-55 TBG CMT LINED

2921 - 2924' LATCH-IN PACKER BAKER AD-1

0 - 2962' 7 " OD 23.00#/ft J-55 PROD CSG

2963 - 3191' 6.25" OD HOLE

KB ELEV: 3311'
TD: 3191'

FORMERLY NO. 149 & 306

TEXACO E & P INC.
COOPER JAL UNIT NO. 244
API# 3002511052

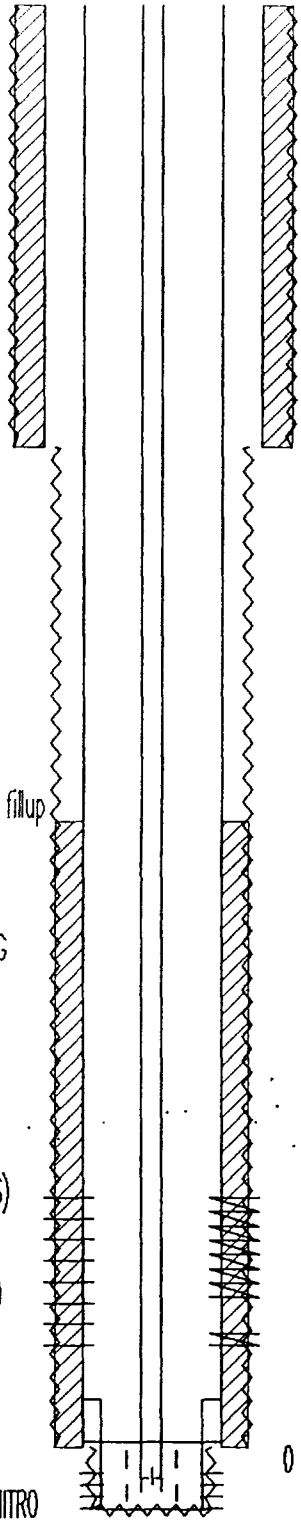

0 - 1050' 11 " OD HOLE

0 - 1050' CEMENT 400sx Circ.

0 - 1050' 8.625" OD 32.00#/ft J-55 SURF CSG

1980 FSL & 1980 FEL
SEC 18 , TWN 24 S, RANGE 37 E
ELEVATION: 3301 GL
COMPLETION DATE: 08-10-46
****
COMPLETION INTERVAL: 3452 - 3601 (SEVEN RVS/QUEEN-OH)
TRT : 240 QTS. NITRO
IP: 108 BOPD, 205 MCFD, 0 BWPD (FLOWING)
11-16-51 C/O FILL
04-23-53 PLUG BACK TO YATES; PERF 3152 - 3205
HYDROFRAC w/ 1500 gals KEROSENE
IP : 0 BOPD, 1171 MCFPD, 0 BWPD
06-12-66 ADDED YATES 2850 - 3070 (10 HOLES)
ACID 5K gals; FRAC 15K gals OIL/15K # 20/40
10-11-68 C/O FILL
06-15-74 COMP. AS DUAL; C/O & JETWASH TO TD (3601')
03-19-76 C/O, FRAC LM; 30K gals/40K # sd. IN 3 STAGES.
09-30-77 ACID 1K gals
08-09-82 SQZD JM 3105-3205; SET 4" LINER
ACID LM; 2.5K gals
06-08-83 PERF JM; 2850 - 3205 (19-0.44" HOLES)
ACID JM; 3K gals
****

1950 - 3452' CEMENT 250sx Calc. w/ 75% fillup

0 - 3556' 2.375" OD 4.70#/ft J-55 TBG

3525 - 3526' SEATING NIPPLE

2850 - 3205' PERFS 1 SPF(19 HOLES)

2850 - 3090' SQUEEZE PERFS 1SPF(10 HOLES)

3152 - 3205' SQUEEZE PERFS 4 SPF(220 HOLES)

1050 - 3452' 7.625" OD HOLE

3336 - 3438' 4" OD 9.50#/ft J-55 Hyd LINER

0 - 3452' 5.5" OD 15.50#/ft J-55 PROD CSG

3501 - 3597' PERFS 240 Qts. NITRO

3438 - 3601' 4" OD 9.50#/ft J-55 Hyd SLOTTED LINER

KB ELEV: 3311'

TD: 3601'

3452 - 3601' 4.75 " OD HOLE

TEXACO E & P INC.
COOPER JAL UNIT NO. 245
API# 3002509625

0 - 265' CEMENT 75sx Circ.

400 - 1191' CEMENT 150sx Thru DV Tool

1940 - 2993' CEMENT 200sx Calc w/ 75% fillup

2871 - 3560' CEMENT 200sx SQZ CIRC.

3010 - 3291' PERFS 1 SPF (90 HOLES)

3105 - 3135' PERFS 8 SPF (240 HOLES)

3310 - 3350' CEMENT PLUG 4sx

3350 - 3353' CIBP

3359 - 3486' PERFS 2 SPF (48 HOLES)

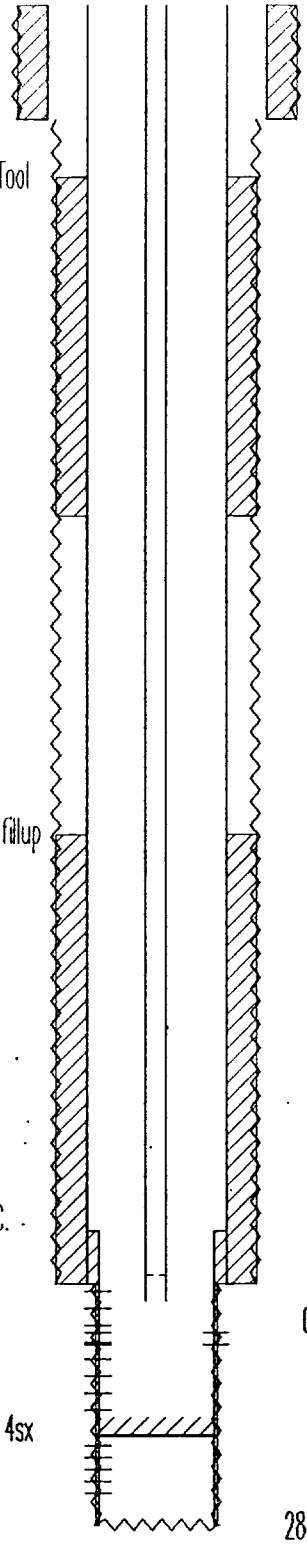

KB ELEV: 3328'
PBTD: 3310'
TD: 3560'

0 - 265' 11" OD HOLE

0 - 265' 8.625" OD 28.00#/ft J-55 SURF CSG

1980 FSL & 1980 FEL
SEC 24 , TWN 24 S, RANGE 36 E
ELEVATION: 3318' GL ; (3325' DF)
COMPLETION DATE: 12-16-49
****
COMPLETION INTERVAL: 2993 - 3208 (YATES-OH)
IP: 63 BOPD, 77 MCFD, 0 BWPD (FL)
06-19-53 C/O FILL TO 3208'.
10-11-58 C/O FILL TO 3208'. WELL PLACED ON ROD PUMP.
02-15-59 C/O FILL TO 3208'.
03-09-61 DEEPENED TO 3560'. INSTALLED 4-1/2" DRILL PIPE
LINER. PERF LM 3359-62,70-72,97-3400,49-53 &
3479-86 (ALL 2 SPF 48 HOLES).
FRAC 15K gals OIL / 15K # sd.
07-27-72 REPAIR CSG HOLE @ 2' w/ FIBERGLASS EPOXY.
11-12-74 PERF JM 3010-18,44-60,93-3104,55-61,76-84,
3200-20 & 3276-91 (ALL 1 SPF 90 HOLES).
SET SAND PLUG @ 3300'. ACID 4K gals. JM ON PMP.
12-10-74 FRAC 40K gals / 37K # 20/40 sd (MAX CONC.=1.5ppg;
AIR 22 BPM @ 2600 psig). C/O WELL TO 3300'.
06-11-85 C/O SAND PLUG 3300-3560. (OPENED LM).
01-27-89 DROPPED 20sx SAND. BRIDGED @ 3216'. C/O TO 3220'.
02-16-89 ACID JM w/ 4K gals
09-15-92 FILL @ 3372'. SET BP @ 3350' w/ 40' CMT CAP.
(PBTD 3310'). TEST TOP OF LINER TO 1500(SUF).OK!
FRAC JM w/ 56K gals X-LINK GEL / 231K # 12/20
BRADY & 16.9K # 12/20 RCS. (AIR = 32 BPM; MAX
CONC. = 12.5ppg). REPAIRED HOLE IN CSG @ 2'.
C/O TO 3310'.
****

265 - 2993' 7.875" OD HOLE

0 - 3034' 2.375" OD 4.70#/ft J-55 TBG

2973 - 2974' SEATING NIPPLE

0 - 2993' 5.5" OD 14.00#/ft J-55 PROD CSG

2993 - 3560' 4.75" OD HOLE

2871 - 3560' 4.5" OD 16.00#/ft DRILL PIPE LINER

TEXACO E & P INC.
COOPER JAL UNIT NO. 303
API# 3002509556

0 - 164' CEMENT 100sx Circ.

0 - 164' 20" OD HOLE

0 - 164' 16" OD 55.00#/ft H-40 SURF CSG

164 - 1125' 12.25" OD HOLE

1100 - 1125' CEMENT

1100 - 2877' CEMENT 125sx TOC by FREE POINT

1085 - 1125' 8.625" OD 28.00#/ft J-55 INT CSG

2310 FSL & 2310 FWL
SEC 13 , TWN 24 S, RANGE 36 E
ELEVATION: 3312 GL
COMPLETION DATE: 04-27-48
###
COMPLETION INTERVAL: 2877 - 3165 (YATES-OH)
IP: 0 BOPD, 4000 MCFD, 0 BWPD (FL) (AOF=63.5 MMCFPD)
INITIAL SITP = 1250 psig
04-16-52 SITP = 859 psig
10-08-75 C/O TO TD (3165')
01-14-80 TAGGED FILL @ 3034', RAISED TBG;
SWABBED WELL
GAS ANALYSIS; SG = 0.8467
DRY GAS = 1417 BTU/MCF
###

1125 - 2877' 7.875" OD HOLE

0 - 2967' 2.375" OD 4.70#/ft J-55 TBG

0 - 2877' 7 " OD 22.00#/ft J-55 PROD CSG

2877 - 3165' 6.125 " OD HOLE

KB ELEV: 3321'
TD: 3165'

TEXACO E & P INC.
COOPER JAL UNIT NO. 304
API# 3002509562

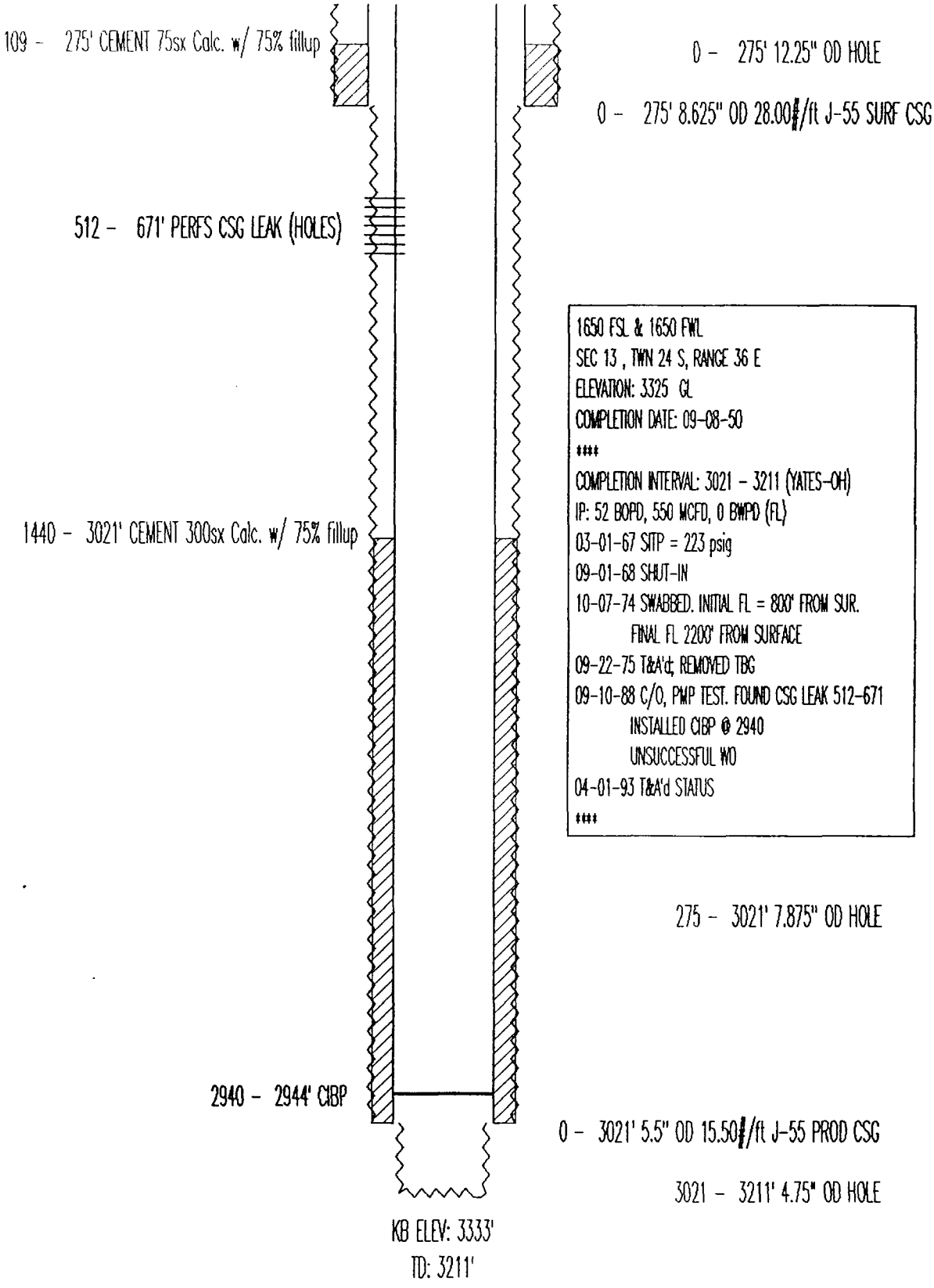

1650 FSL & 1650 FWL
SEC 13 , TWN 24 S, RANGE 36 E
ELEVATION: 3325 GL
COMPLETION DATE: 09-08-50
****
COMPLETION INTERVAL: 3021 - 3211 (YATES-OH)
IP: 52 BOPD, 550 MCFD, 0 BWPD (FL)
03-01-67 SITP = 223 psig
09-01-68 SHUT-IN
10-07-74 SWABBED. INITIAL FL = 800' FROM SUR.
FINAL FL 2200' FROM SURFACE
09-22-75 T&A'd; REMOVED TBG
09-10-88 C/O, PMP TEST. FOUND CSG LEAK 512-671
INSTALLED CIBP @ 2940
UNSUCCESSFUL WO
04-01-93 T&A'd STATUS
****

PHILLIPS PETROLEUM CO.
C. D. WOOLWORTH NO. 5
API# 30-025-09682