February 2, 1994

State of New Mexico
Energy, Minerals and Natural Resources Dept.
Oil Conservation Division
P.O. box 2088
Santa Fe, NM 87504-2088

Gentlemen:

SUBJECT: APPLICATION FOR EXPANSION OF WATERFLOOD
RHODES COOP WATERFLOOD
RHODES YATES SEVEN RIVERS POOL
LEA COUNTY, NM

We request administrative approval to expand the waterflood on the Rhodes Yates Unit. Order No. R-2748, dated July 29, 1964, authorized Texaco to institute a waterflood project.

Six wells will be converted to injection on the W.H. Rhodes B Fed NCT-1, W.H. Rhodes B Fed NCT-2, and W.H. Rhodes A Fed leases. Form C-108 and attachments are enclosed.

Copies of this application with attachments have been sent to the offset operators.

If any additional information is needed, contact Darlene de Aragao at (505) 397-0424.

Sincerely,

T.L. Frazier
Hobbs Area Manager

ddd

Attachments

STATE OF NEW MEXICO
ENERGY AND MINERALS DEPARTMENT

OIL CONSERVATION DIVISION
POST OFFICE BOX 2088
STATE LAND OFFICE BUILDING
SANTA FE, NEW MEXICO 87501

FORM C-108
Revised 7-1-81

APPLICATION FOR AUTHORIZATION TO INJECT

I. Purpose: [X] Secondary Recovery [ ] Pressure Maintenance [ ] Disposal [ ] Storage
Application qualifies for administrative approval? [ ] yes [ ] no

II. Operator: Texaco Exploration & Production Inc.

Address: P.O. Box 730, Hobbs, New Mexico 88240

Contact party: Darlene de Aragao Phone: 505-397-0424

III. Well data: Complete the data required on the reverse side of this form for each well proposed for injection. Additional sheets may be attached if necessary.

IV. Is this an expansion of an existing project? [X] yes [ ] no
If yes, give the Division order number authorizing the project see attachment.

V. Attach a map that identifies all wells and leases within two miles of any proposed injection well with a one-half mile radius circle drawn around each proposed injection well. This circle identifies the well's area of review.

* VI. Attach a tabulation of data on all wells of public record within the area of review which penetrate the proposed injection zone. Such data shall include a description of each well's type, construction, date drilled, location, depth, record of completion, and a schematic of any plugged well illustrating all plugging detail.

VII. Attach data on the proposed operation, including:

1. Proposed average and maximum daily rate and volume of fluids to be injected;
2. Whether the system is open or closed;
3. Proposed average and maximum injection pressure;
4. Sources and an appropriate analysis of injection fluid and compatibility with the receiving formation if other than reinjected produced water; and
5. If injection is for disposal purposes into a zone not productive of oil or gas at or within one mile of the proposed well, attach a chemical analysis of the disposal zone formation water (may be measured or inferred from existing literature, studies, nearby wells, etc.).

*VIII. Attach appropriate geological data on the injection zone including appropriate lithologic detail, geological name, thickness, and depth. Give the geologic name, and depth to bottom of all underground sources of drinking water (aquifers containing waters with total dissolved solids concentrations of 10,000 mg/l or less) overlying the proposed injection zone as well as any such source known to be immediately underlying the injection interval.

IX. Describe the proposed stimulation program, if any.

* X. Attach appropriate logging and test data on the well. (If well logs have been filed with the Division they need not be resubmitted.)

* XI. Attach a chemical analysis of fresh water from two or more fresh water wells (if available and producing) within one mile of any injection or disposal well showing location of wells and dates samples were taken.

XII. Applicants for disposal wells must make an affirmative statement that they have examined available geologic and engineering data and find no evidence of open faults or any other hydrologic connection between the disposal zone and any underground source of drinking water.

XIII. Applicants must complete the "Proof of Notice" section on the reverse side of this form.

XIV. Certification

I hereby certify that the information submitted with this application is true and correct to the best of my knowledge and belief.

Name: Terry L. Frazier Title Area Manager

Signature: Terry Frazier Date: 1/27/94

* If the information required under Sections VI, VIII, X, and XI above has been previously submitted, it need not be duplicated and resubmitted. Please show the date and circumstance of the earlier submittal. see attachment

TEXACO INC.
HOBBS NM U.S.A.

RHODES YATES WATERFLOOD
LEA COUNTY, NEW MEXICO

1"=1000' | C. E. SADLER | 29-MAR-91

CONVERSIONS
NEW INFILL WELLS (proposed)

HERIDIAN | HERIDIAN | HERIDIAN OIL | 21 | HERIDIAN OIL | 22
ELLIOTT FED
HOBERLY -B-
HERIDIAN
HOBERLY -C-
HOBERLY RHODES UNIT
HERIDIAN OPER.
HERIDIAN 2-C
ROBIN -O- ST
RHODES -A-
RHODES FED -A-
TEXACO
SOUTH LEONARD UNIT
WOOD, ETAL OPER.
RHODES
HERIDIAN 2-B | HERIDIAN | 28 | 27 | 26
RHODES YATES UNIT
HERIDIAN
GREGORY -B-
LINEBERRY
STATE UTP
TEXACO
RHODES COOP
RHODES FED -B- NCT-2
RHODES FED -B- NCT-1
RHODES FED -B- NCT-1
SEA LAND OIL | 33 | TA | MARATHON | KOCH | 34 | KOCH EXPL. | 35
3-A
WILLS -A-
KOCH
1-H
SCARBOROUGH
WILLS FED
WILLS -B-
WILLS -A-

STATUTE MILES 0 .1 .2 .3 .4 .5 STATUTE MILES
1:12000
FEET 0 1000 2000 3000 4000 5000 FEET

RTM

SUMMARY OF ORDER NUMBERS FOR
RHODES COOP

R-2748	07-29-64	INSTITUTE THE COOP WATERFLOOD
R-2748-A	02-18-93	EXPANSION
WFX-454	08-02-77	EXPANSION
R-9847	02-17-93	EXPANSION
WFX-645	06-17-93	EXPANSION

NEW MEXICO OIL CONSERVATION DIVISION - Form c-108, cont'd

Conversion of the following wells to injection
Rhodes Yates Seven Rivers

W.H. Rhodes B Fed NCT-1
#11 1980' FSL, 1980' FWL, 26-26S-37E, UNIT E
#12 660' FSL, 1980' FEL, 26-26S-37E, UNIT O

W.H. Rhodes B Fed NCT-2
#5 1980' FSL, 1980' FEL, 28-26S-37E, UNIT J
#6 660' FSL, 1880' FEL, 28-26S-37E, UNIT O

W.H. Rhodes A Fed
#3 660' FSL, 660' FWL, 22-26S-37E, UNIT M
#5 555' FSL, 2085' FWL, 22-26S-37E, UNIT O

III. See attached injection well data sheets.

IV. Expansion of existing project order No. R-2748

V. See attached map.

VI. See attached well information and schematics.

VII. 1). Average injection rate - 400 BWPD
Maximum injection rate - 600 BWPD

2). Closed injection system

3). Average injection pressure 1100 psi
Initial maximum injection pressure - 600 psi (0.2 psi/ft).
Maximum injection pressure - 2000 psi (possible after step rate tests).

4). Yates Seven Rivers produced water
Santa Rosa and Ogallala fresh water for make-up.

IX. 15% HCL NEFE acid and fracturing.

XII. N/A

PROPOSED INJECTION WELL

TEXACO E&P
RHODES, W.H. B FED. NCT-1 #11
API# 3002512057

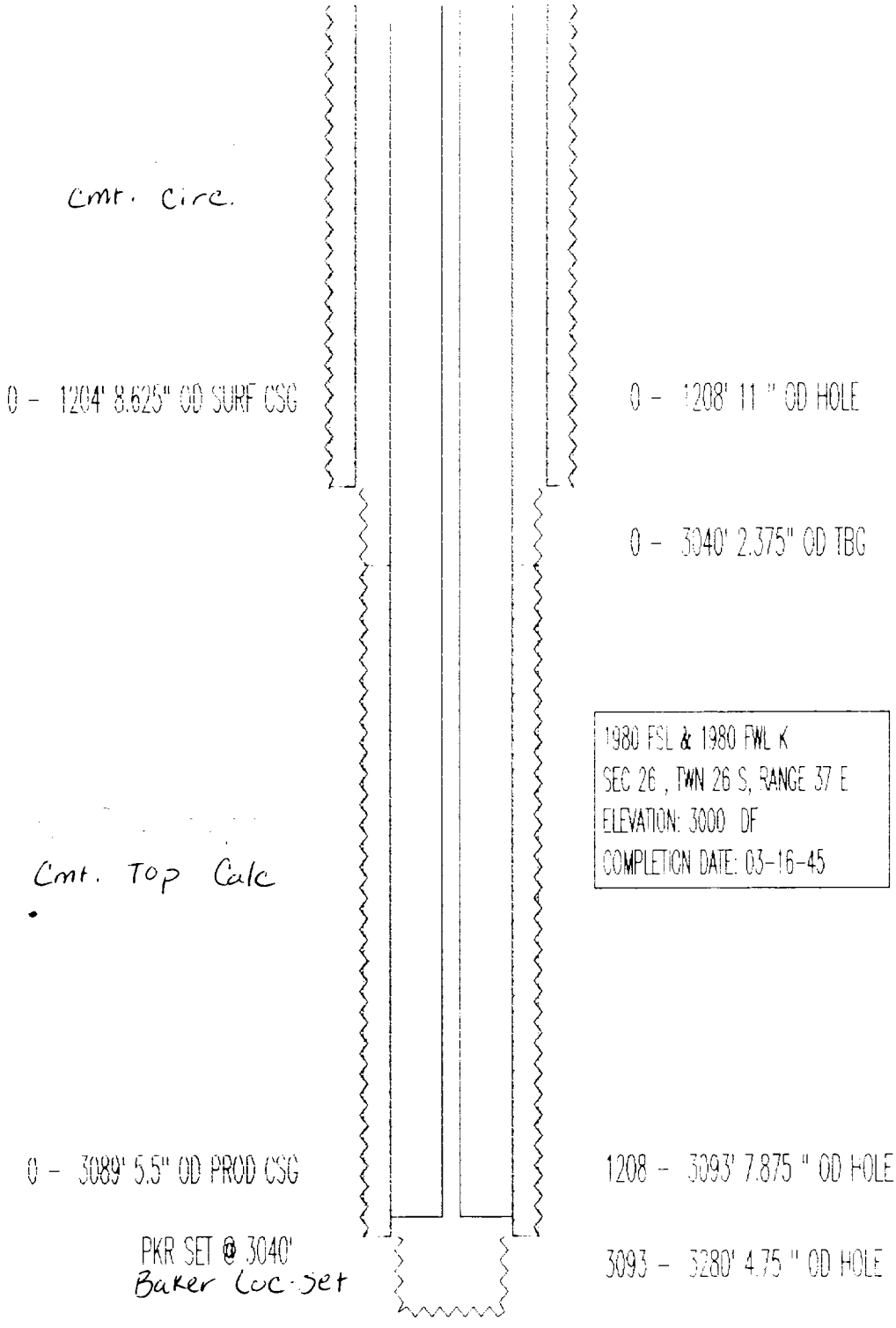

KB ELEV: 11.5'
PBTD: 3240'
TD: 3240'

PROPOSED INJECTION WELL

TEXACO E&P
RHODES, W.H. B FED. NO. 12
API# 3002511980

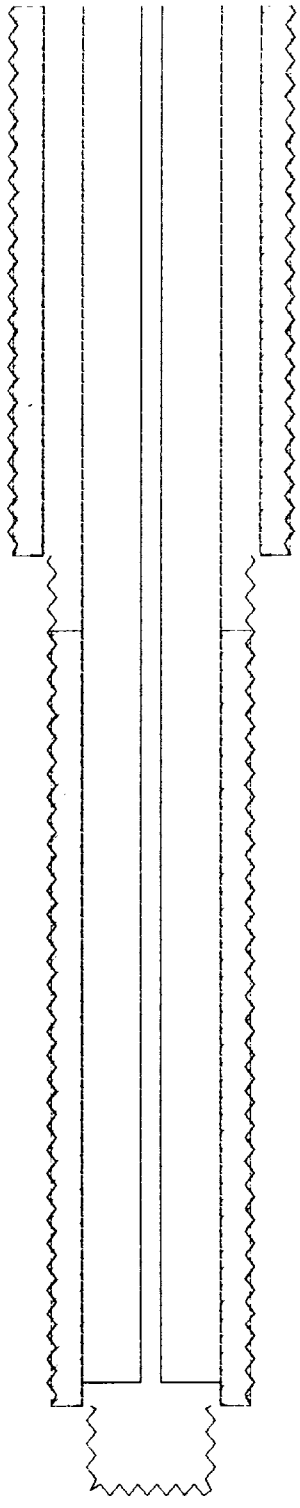

Cmt. Circ

0 - 1208' 8.625" OD SURF CSG

0 - 1208' 11 " OD HOLE

0 - 3040' 2.375" OD TBG

660 FSL & 1980 FEL O
SEC 26 , TWN 26 S, RANGE 37 E
ELEVATION: 3006 DF
COMPLETION DATE: 04-13-45

Cmt. Top Calc.

0 - 3093' 5.5" OD PROD CSG

1208 - 3093' 7.875 " OD HOLE

PKR SET @ 3040'
Baker Loc-set

3093 - 3280' 4.75 " OD HOLE

KB ELEV: 11.5'
PBTD: 3276'
TD: 3280'

PROPOSED INJECTION WELL

TEXACO E&P
RHODES W.H. B FED NCT-2 NO. 5
API# 3002525692

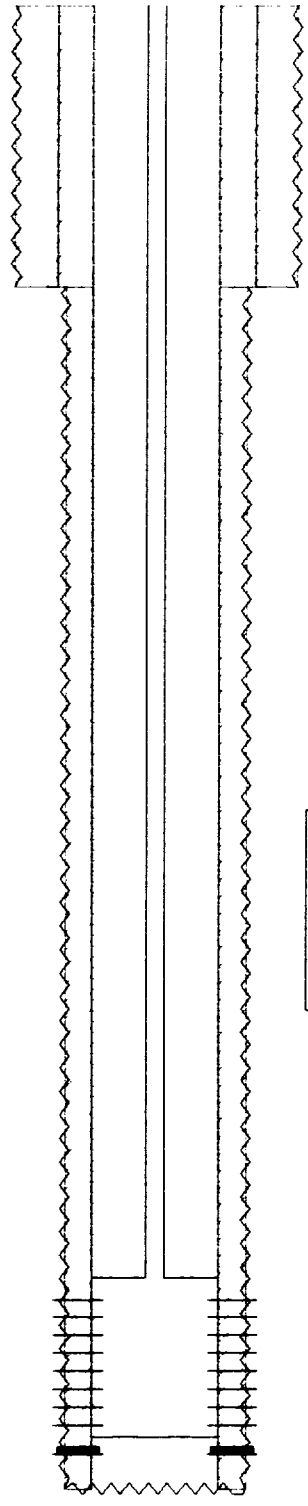

cmt. circ.

0 - 650' 8.625" OD SURF CSG

0 - 650' 12.25" OD HOLE

0 - 2957' 2.375" OD TBG

cmt. circ

1980 FSL & 1980 FEL
SEC 28 , TWN 26 S, RANGE 37 E
ELEVATION: 2966 GR
COMPLETION DATE: 02-24-78

2957 - 2957' PACKER Baker Lok-set
3007 - 3302' PERFS

3330 - 3330' CIBP
0 - 3450' 5.5" OD PROD CSG

3353 - 3370' ABANDONED PERFS
650 - 3450' 7.875 " OD HOLE

KB ELEV: 14'
PBTD: 3320'
TD: 3450'

PROPOSED INJECTION WELL

TEXACO INC
RHODES, W.H. B FED NCT-2 #6
API# 3002528911

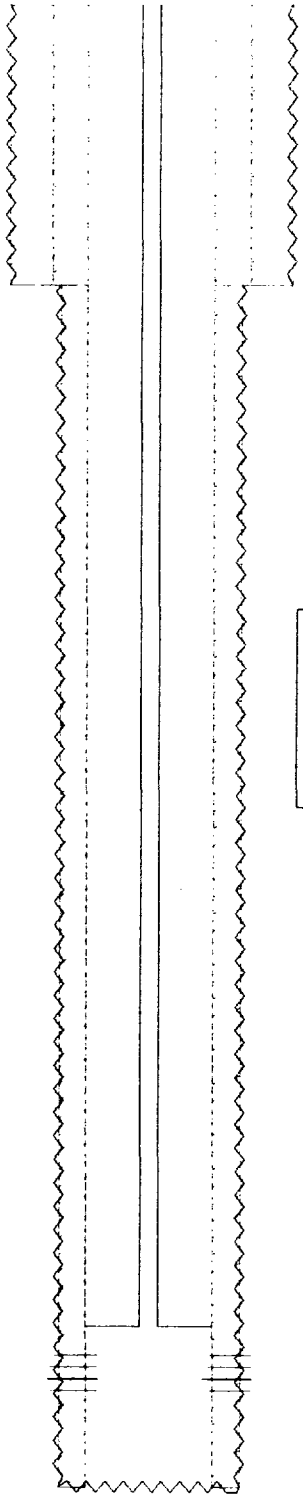

CMT CIRC

0 - 650' 12.25" OD HOLE

0 - 3077' 2.375" OD TBG PC

660 FSL & 1880 FEL UNIT O
SEC 28 , TWN 26 S, RANGE 37 E
ELEVATION: 2966 GR
COMPLETION DATE: 11-07-84

CMT CIRC

BAKER LOC-SET PKR SET @ 3077'

650 - 3450' 7.875 " OD HOLE

PBTD: 3240'

TD: 3450'

PROPOSED INJECTION WELL

TEXACO E&P
RHODES, W.H. A FED. #3
API# 3002512035

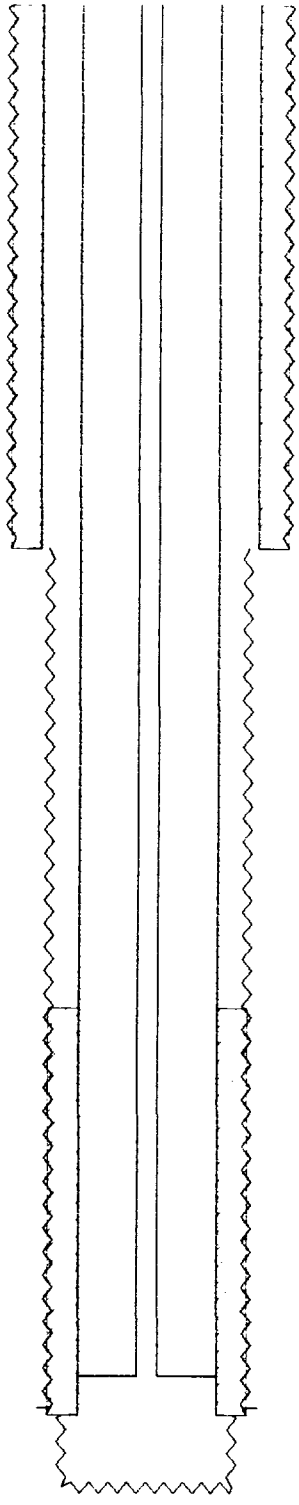

cmt. circ.

0 - 1207' 8.625" OD SURF CSG

0 - 1207' 11 " OD HOLE

0 - 3050' 2.375" OD TBG

660 FSL & 660 FWL
SEC 22 , TWN 26 S, RANGE 37 E
ELEVATION: 2964 GR
COMPLETION DATE: 02-26-44

Calc

0 - 3138' 5.5" OD PROD CSG

1207 - 3138' 7.875" OD HOLE
3103 - 3120' PERFS
3138 - 3300' 6.75" OD HOLE

PBTD: 3300'

PKR SET @ 3050'
Baker Loc-set

PROPOSED INJECTION WELL

TEXACO E&P
RHODES, W.H. A FED. #5
API# 3002512037

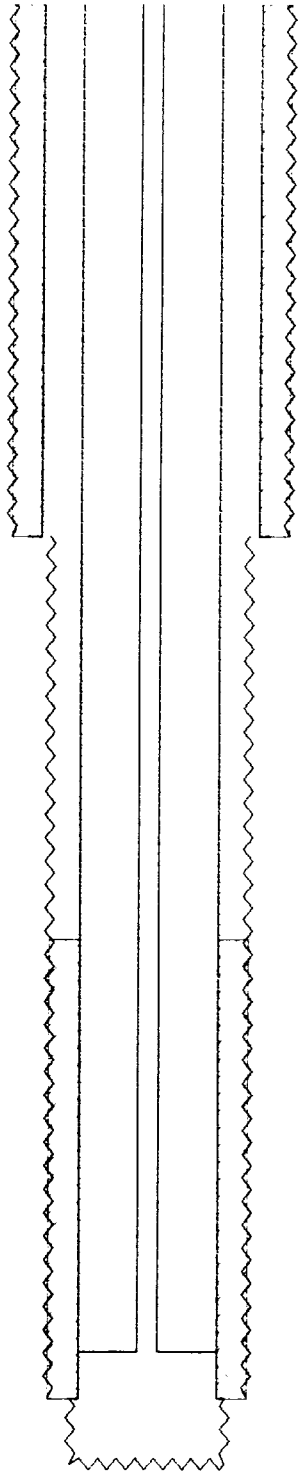

Cmt. circ

0 - 1182' 8.625" OD SURF CSG

0 - 1182' 11 " OD HOLE

0 - 3000' 2.375" OD TBG

555 FSL & 2085 FWL 0
SEC 22 , TWN 26 S, RANGE 37 E
ELEVATION: 2991 DF
COMPLETION DATE: 07-13-44

Cmt Top Calc.

0 - 3105' 5.5" OD PROD CSG

1182 - 3105' 7.875" OD HOLE
3105 - 3250' 6.125" OD HOLE

PKR SET @ 3000
Baker Loc-set

PBTD: 3250'

WELLS WITHIN AREA OF REVIEW THAT HAVE NOT BEEN SUBMITTED IN PAST

LEASE NAME	WELL TYPE	STATUS	OPERATOR
MOBERLY RHODES WATERFLOOD #4	OIL		MERIDIAN OIL INC
MOBERLY RHODES WATERFLOOD #5	OIL		MERIDIAN OIL INC
MOBERLY #1	OIL	P&A	KRUPP & FLAHERLY
WILLS FEDERAL #4	OIL		SEA LAND OIL CO.
WILLS FEDERAL #7	INJ		SEA LAND OIL CO.
RHODES, W.H. A FEDERAL #6	INJ		TEXACO E&P

MOBERLY RHODES WATERFLOOD 4
MERIDIAN OIL INC.
INJECTOR

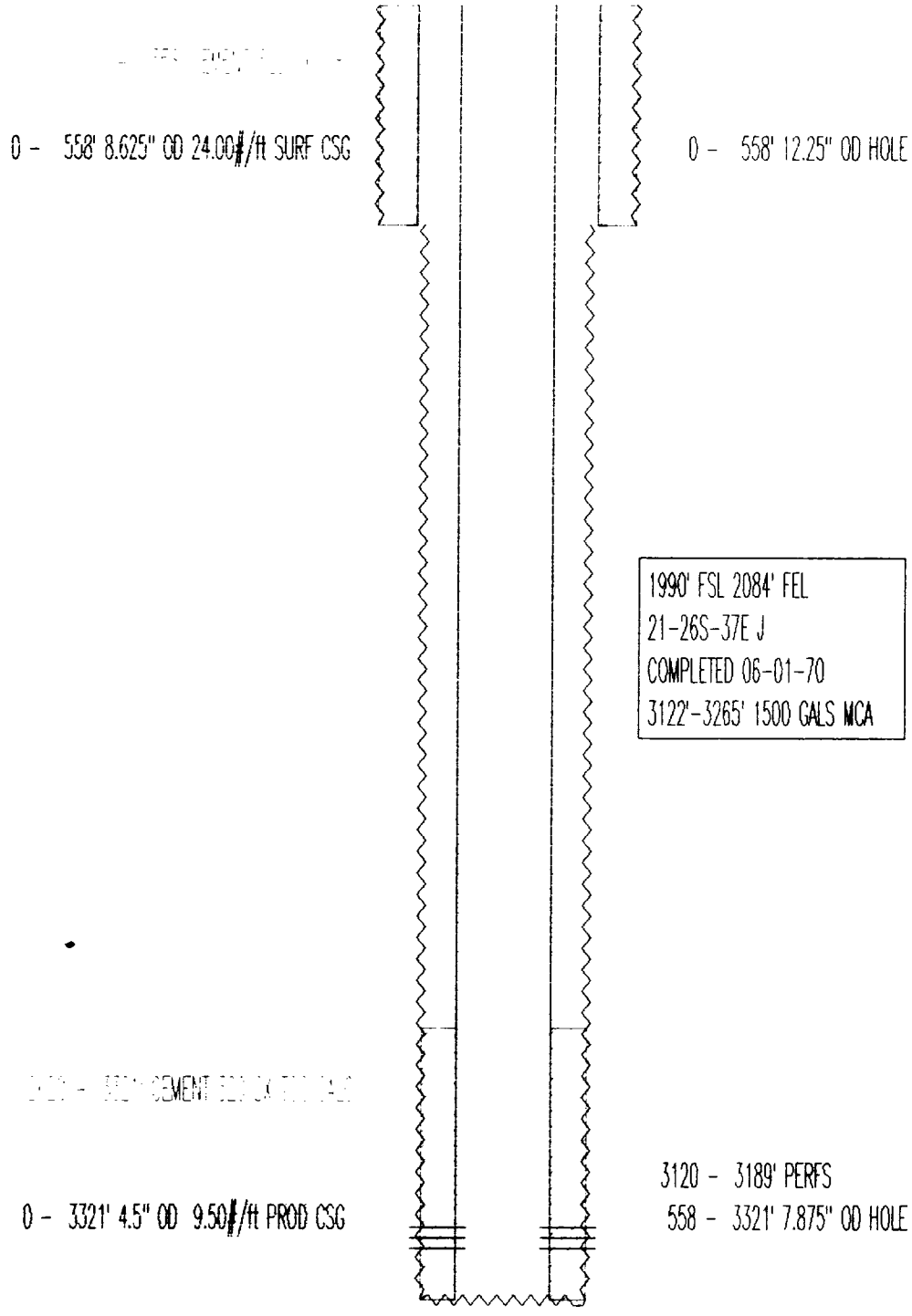

PBTD: 3321'
TD: 3322'

MOBERLY RHODES WATERFLOOD 5
MERIDIAN
PRODUCER

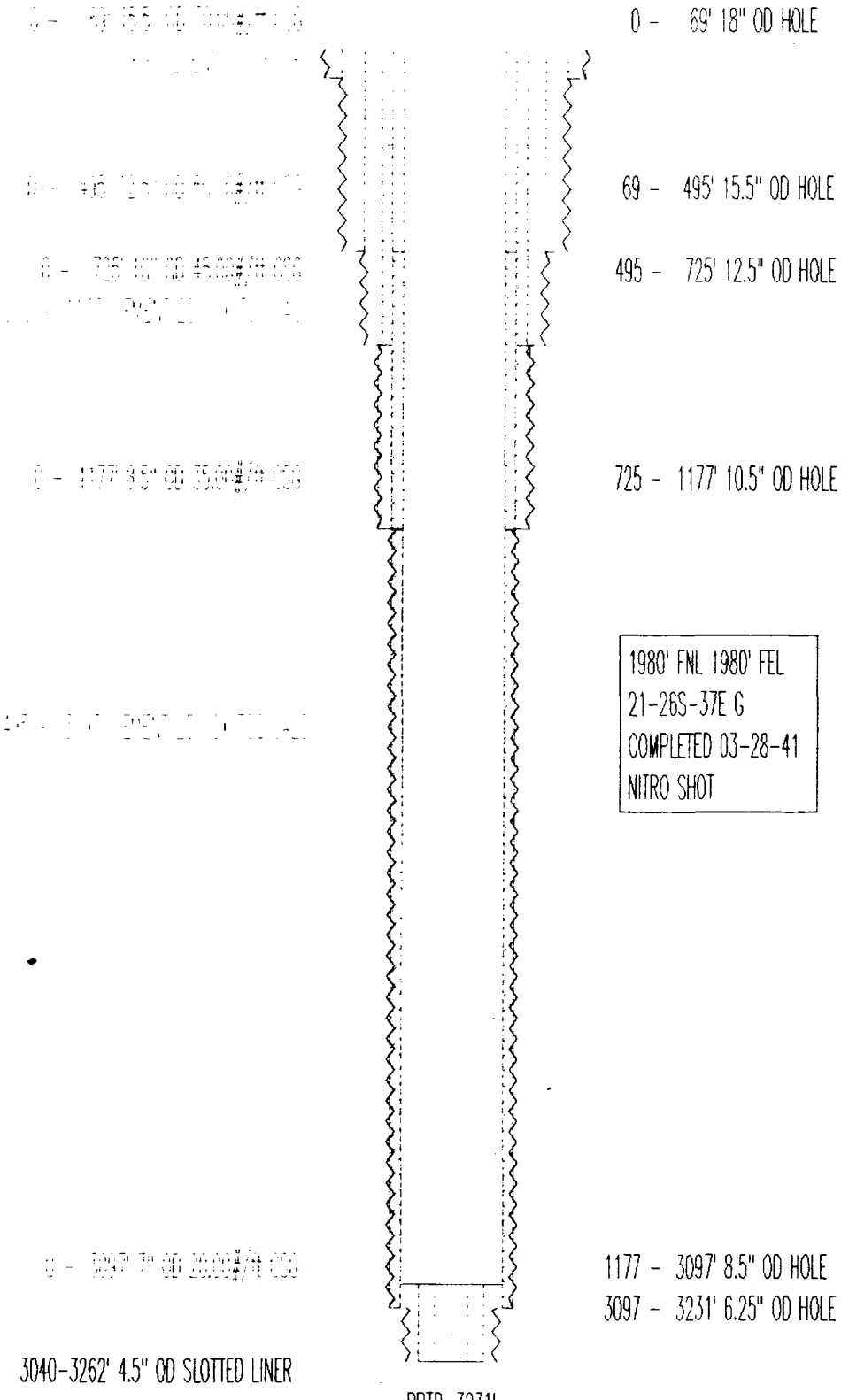

WILLS FEDERAL 4
SEA SAND OIL COMPANY
PRODUCER

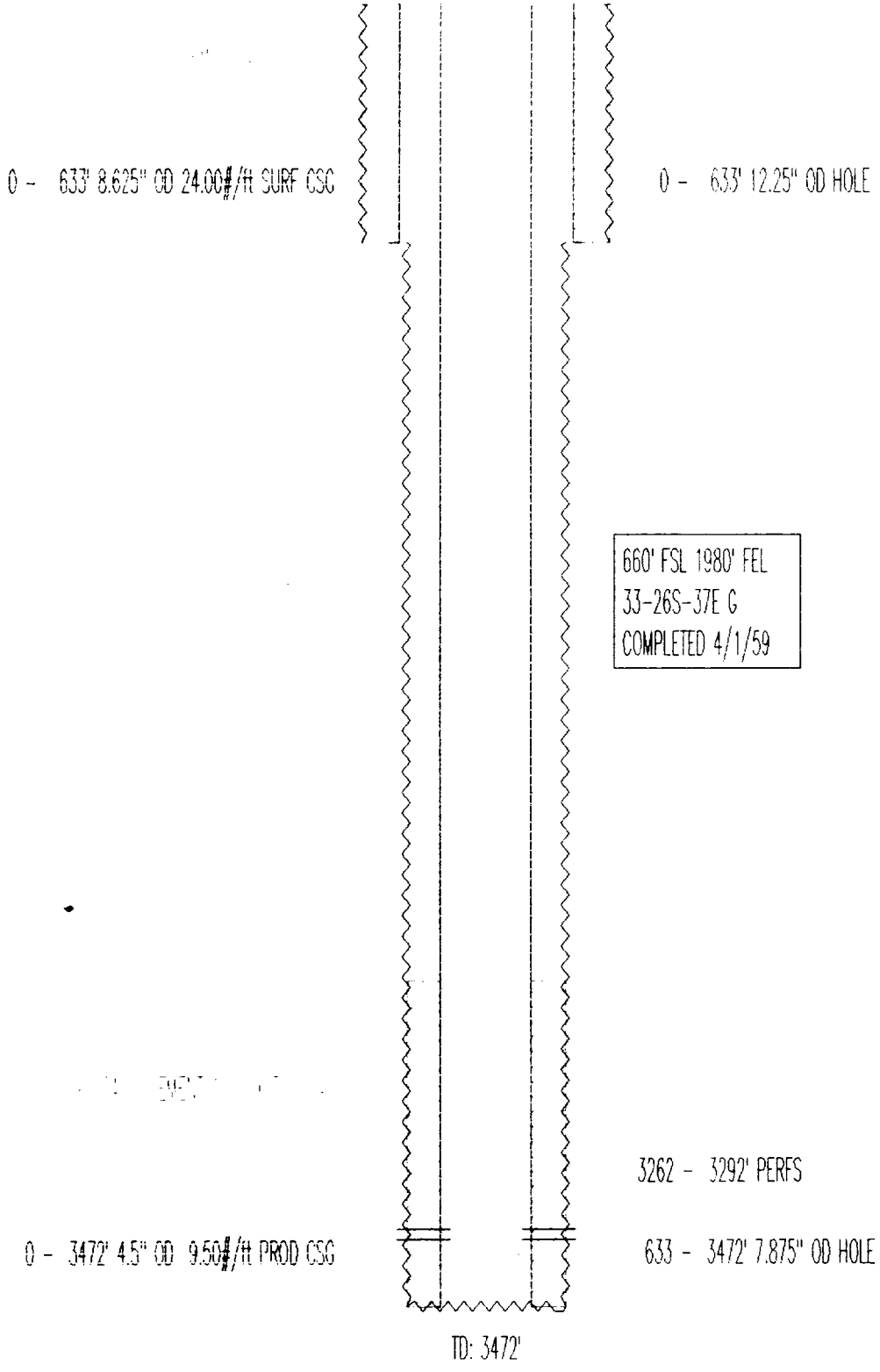

MOBERLY 1
KRUPP & FLAHERTY
P&A

21-26S-37E J
COMPLETED 9-26-40

NO RECORD OF HOW WELL WAS P&A

0 - 58' 18" OD HOLE

58 - 470' 15.5" OD HOLE

470 - 683' 12.5" OD HOLE

683 - 1183' 10" OD HOLE

1183 - 3070' 8.5" OD HOLE

3070 - 3254' 6.25" OD HOLE

HOLE SIZE UNKNOWN

NITRO SHOT

PBTD: 3254'

TD: 3254'

WILLS FEDERAL 7
SEA SAND OIL COMPANY
PRODUCER

0 - 604' 8.625" OD 24.00#/ft SURF CSG

0 - 604' 12.25" OD HOLE

660' FNL 1980' FWL
26S-37E-33 E
COMPLETED 07-19-59
TREATMENT: FRAC 20/30
05-20-64 CONVERT TO INJ
05-08-89 CONVERT TO PROD

3056 - 3220' PERFS

0 - 3245' 4.5" OD 9.50#/ft PROD CSG

604 - 3245' 7.875" OD HOLE

TD: 3245'

TEXACO E&P
RHODES, W.H. A FED. NO. 6
API# 3002512038

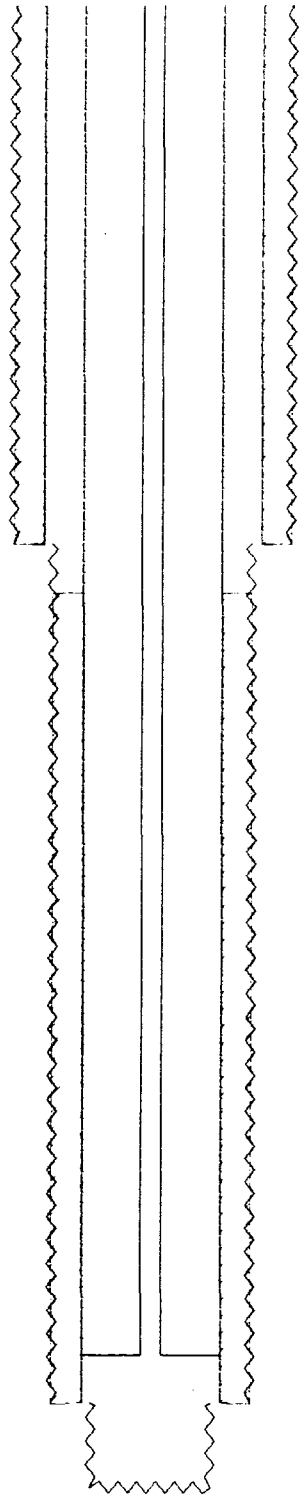

Cmt. circ.

0 - 1190' 8.625" OD SURF CSG

0 - 1190' 11 " OD HOLE

0 - 2994' 2.375" OD TBG

1980 FSL & 660 FWL
SEC 22 , TWN 26 S, RANGE 37 E
ELEVATION: 2987 ES
COMPLETION DATE: 05-22-45
****
COMPLETION INTERVAL: 3088 - 3287 ( )
IP: 27 BOPD, 0 MCFD, 0 BWPD (FLOWING)
****

Cmt. Top Calc.

2994 - 2994' PACKER Baker Loc-Set

0 - 3100' 5.5" OD PROD CSG

1190 - 3100' 7.875 " OD HOLE

3100 - 3287' 4.75 " OD HOLE

PBTD: 3287'

Z 004 855 462

Receipt for Certified Mail

No Insurance Coverage Provided
Do not use for International Mail
(See Reverse)

UNITED STATES POSTAL SERVICE

Sent to Bureau of Land Management	
Street and No. PO Box 27115	
P.O., State and ZIP Code Santa Fe, NM 87502-0115	
Postage	$
Certified Fee	
Special Delivery Fee	
Restricted Delivery Fee	
Return Receipt Showing to Whom & Date Delivered	
Return Receipt Showing to Whom, Date, and Addressee's Address	
TOTAL Postage & Fees	$
Postmark or Date	

PS Form 3800, March 1993

Z 004 855 459

Receipt for Certified Mail

No Insurance Coverage Provided
Do not use for International Mail
(See Reverse)

UNITED STATES POSTAL SERVICE

Sent to Amerada Hess Corp	
Street and No. PO Box 2040	
P.O., State and ZIP Code Tulsa, OK 74102	
Postage	$
Certified Fee	
Special Delivery Fee	
Restricted Delivery Fee	
Return Receipt Showing to Whom & Date Delivered	
Return Receipt Showing to Whom Date, and Addressee's Address	
TOTAL Postage & Fees	$
Postmark or Date	

PS Form 3800, March 1993

Z 004 855 461

Receipt for Certified Mail

No Insurance Coverage Provided
Do not use for International Mail
(See Reverse)

UNITED STATES POSTAL SERVICE

Sent to Tom + Evelyn Lineberry	
Street and No. 802 S Main	
P.O., State and ZIP Code Midland, Tx 79701	
Postage	$
Certified Fee	
Special Delivery Fee	
Restricted Delivery Fee	
Return Receipt Showing to Whom & Date Delivered	
Return Receipt Showing to Whom, Date, and Addressee's Address	
TOTAL Postage & Fees	$
Postmark or Date	

PS Form 3800, March 1993

Z 004 855 458

Receipt for Certified Mail

No Insurance Coverage Provided
Do not use for International Mail
(See Reverse)

UNITED STATES POSTAL SERVICE

Sent to Doyle Hartman	
Street and No. P.O. Box 10426	
P.O., State and ZIP Code Midland, TX 79702	
Postage	$
Certified Fee	
Special Delivery Fee	
Restricted Delivery Fee	
Return Receipt Showing to Whom & Date Delivered	
Return Receipt Showing to Whom, Date, and Addressee's Address	
TOTAL Postage & Fees	$
Postmark or Date	

PS Form 3800, March 1993

Z 004 855 419

Receipt for Certified Mail

No Insurance Coverage Provided
Do not use for International Mail
(See Reverse)

UNITED STATES POSTAL SERVICE

Sent to Meridian Oil Inc	
Street and No. P.O. Box 51810	
P.O., State and ZIP Code Midland, TX 79710	
Postage	$
Certified Fee	
Special Delivery Fee	
Restricted Delivery Fee	
Return Receipt Showing to Whom & Date Delivered	
Return Receipt Showing to Whom, Date, and Addressee's Address	
TOTAL Postage & Fees	$
Postmark or Date	

PS Form 3800, March 1993

Z 004 855 453

Receipt for Certified Mail

No Insurance Coverage Provided
Do not use for International Mail
(See Reverse)

UNITED STATES POSTAL SERVICE

Sent to Oxy USA Inc	
Street and No. P.O. Box 300	
P.O., State and ZIP Code Tulsa, OK 74102	
Postage	$
Certified Fee	
Special Delivery Fee	
Restricted Delivery Fee	
Return Receipt Showing to Whom & Date Delivered	
Return Receipt Showing to Whom, Date, and Addressee's Address	
TOTAL Postage & Fees	$
Postmark or Date	

PS Form 3800, March 1993

Z 004 855 454

Receipt for Certified Mail

No Insurance Coverage Provided
Do not use for International Mail
(See Reverse)

UNITED STATES POSTAL SERVICE

Sent to Smith & Marrs Inc.	
Street and No. 1110 N Big Spring	
P.O., State and ZIP Code Midland, Tx 79701	
Postage	$
Certified Fee	
Special Delivery Fee	
Restricted Delivery Fee	
Return Receipt Showing to Whom & Date Delivered	
Return Receipt Showing to Whom, Date, and Addressee's Address	
TOTAL Postage & Fees	$
Postmark or Date	

PS Form 3800, March 1993

Z 004 855 455

Receipt for Certified Mail

No Insurance Coverage Provided
Do not use for International Mail
(See Reverse)

UNITED STATES POSTAL SERVICE

Sent to Mack Energy Corp	
Street and No. P.O. Box 960	
P.O., State and ZIP Code Artesia, NM 88211	
Postage	$
Certified Fee	
Special Delivery Fee	
Restricted Delivery Fee	
Return Receipt Showing to Whom & Date Delivered	
Return Receipt Showing to Whom, Date, and Addressee's Address	
TOTAL Postage & Fees	$
Postmark or Date	

PS Form 3800, March 1993

Z 004 855 456

Receipt for Certified Mail

No Insurance Coverage Provided
Do not use for International Mail
(See Reverse)

Sent to Marathon Oil Co.	
Street and No. PO Box 552	
P.O., State and ZIP Code Midland, TX 79702	
Postage	$
Certified Fee	
Special Delivery Fee	
Restricted Delivery Fee	
Return Receipt Showing to Whom & Date Delivered	
Return Receipt Showing to Whom Date, and Addressee's Address	
TOTAL Postage & Fees	$
Postmark or Date	

PS Form 3800, March 1993

Z 004 855 460

Receipt for Certified Mail

No [illegible]ance Coverage Provided
Do [illegible]se for International Mail
([illegible]everse)

Sent [illegible] Sea Sand Oil Co.	
Street and No. PO Box 101777	
P.O., State and ZIP Code Ft Worth, TX 76185	
Postage	$
Certified Fee	
[illegible]very Fee	
Restricted Delivery Fee	
Return Receipt Showing to Whom & Date Delivered	
Return Receipt Showing to Whom Date, and Addressee's Address	
TOTAL Postage & Fees	$
Postmark or Date	

PS Form 3800, March 1993

AFFIDAVIT OF PUBLICATION

State of New Mexico,
County of Lea.

I, Kathi Bearden

General Manager

of the Hobbs Daily News-Sun, a daily newspaper published at Hobbs, New Mexico, do solemnly swear that the clipping attached hereto was published once a week in the regular and entire issue of said paper, and not a supplement thereof for a period.

of

one weeks.

Beginning with the issue dated

January 28, 1994

and ending with the issue dated

January 28, 1994

Kathi Bearden

General Manager

Sworn and subscribed to before me this 31 day of January, 1994

Marlene Perrin

Notary Public.

My Commission expires
March 15, 1997
(Seal)

This newspaper is duly qualified to publish legal notices or advertisements within the meaning of Section 3, Chapter 167, Laws of 1937, and payment of fees for said publication has been made.

LEGAL NOTICE
January 28, 1994

Notice is hereby given of the application of Texaco Exploration and Production Inc., Attention: Terry L. Frazier, Area Manager, P.O. Box 730, Hobbs, New Mexico, 88240, Telephone (505) 393-7191, to the New Mexico Oil Conservation Commission, Energy and Minerals Department, for approval of the following wells to be converted to injection for the purpose of expanding waterflood.

Lease/Unit Name: Rhodes Yates Unit #1 Lea Co., NM
1980' FSL, 660' FEL 21-26S-37E UNIT I

Lease/Unit Name: W.H. Rhodes B Fed. NCT-1 Lea Co., NM
#11 1980' FSL, 1980' FWL 26-26S-37E Unit K
#12 660' FSL, 1980' FEL 26-26S-37E Unit 0

Lease/Unit Name: W.H. Rhodes A Fed. Lea Co., NM
#3 660' FSL, 660' FWL 22-26S-37E Unit E
#5 555' FSL, 2085' FWL 22-26S-37E Unit 0

Lease/Unit Name: W.H. Rhodes B Fed. NCT-2 Lea Co., NM
#5 1980' FSL, 1980' FEL 28-26S-37E Unit J
#6 660' FSL, 1880' FEL 28-26S-37E Unit 0

The injection formation is the Rhodes Yates Seven Rivers at a depth of 3000' below the surface of the ground. Expected maximum injection rate is 600 BPD, and expected maximum injection pressure is 2000 psi. Interested parties must file objections or requests for hearing with the Oil Conservation Division, P.O. Box 2088, Santa Fe, New Mexico, 87501, within fifteen days of this publication.

Form approved.
Budget Bureau No. 42-R355.5.

(Rev. 5-63)

UNITED STATES
DEPARTMENT OF THE INTERIOR
GEOLOGICAL SURVEY

SUBMIT IN DUPLICATE*
(See other instructions on reverse side)

MAY TO O. C. C.

WELL COMPLETION OR RECOMPLETION REPORT AND LOG*

5. LEASE DESIGNATION AND SERIAL NO.: LC-030174 (b)

6. IF INDIAN, ALLOTTEE OR TRIBE NAME: —

7. UNIT AGREEMENT NAME: —

8. FARM OR LEASE NAME: W.H. Rhodes B Fed. NCT-

9. WELL NO.: 19

10. FIELD AND POOL, OR WILDCAT: Rhodes Yates

11. SEC., T., R., M., OR BLOCK AND SURVEY OR AREA: Sec. 26 T-26-S, R-37-E

1a. TYPE OF WELL: OIL WELL ☐ GAS WELL ☐ DRY ☐ Other Water Injection

b. TYPE OF COMPLETION: NEW WELL ☒ WORK OVER ☐ DEEP-EN ☐ PLUG BACK ☐ DIFF. RESVR. ☐ Other

2. NAME OF OPERATOR: Texaco Inc.

3. ADDRESS OF OPERATOR: P.O. Box 728, Hobbs, New Mexico 88240

4. LOCATION OF WELL (Report location clearly and in accordance with any State requirements)*
At surface
At top prod. interval reported below
At total depth
3300' FNL & 1980' FEL of Section 26, T-26-S, R-37-E, Unit Letter 'J', Lea County, New Mexico

14. PERMIT NO.: Regular — DATE ISSUED: 12-21-76

12. COUNTY OR PARISH: Lea — 13. STATE: New Mexico

15. DATE SPUDDED	16. DATE T.D. REACHED	17. DATE COMPL. (Ready to prod.)	18. ELEVATIONS (DF, RKB, RT, GR, ETC.)*	19. ELEV. CASINGHEAD
6-17-77	6-21-77	7-1-77	2995' (GR)	2995'

20. TOTAL DEPTH, MD & TVD	21. PLUG, BACK T.D., MD & TVD	22. IF MULTIPLE COMPL., HOW MANY*	23. INTERVALS DRILLED BY	ROTARY TOOLS	CABLE TOOLS
3280'	3207'		→	0 - 3280	-0-

24. PRODUCING INTERVAL(S), OF THIS COMPLETION—TOP, BOTTOM, NAME (MD AND TVD)*
3155'- 3182' Rhodes Yates

25. WAS DIRECTIONAL SURVEY MADE: No

26. TYPE ELECTRIC AND OTHER LOGS RUN: BHC Acoustilog & Gamma Ray

27. WAS WELL CORED: No

28. CASING RECORD (Report all strings set in well)

CASING SIZE	WEIGHT, LB./FT.	DEPTH SET (MD)	HOLE SIZE	CEMENTING RECORD	AMOUNT PULLED
8 5/8"	24 #	669'	12 1/4"	600 Sx.	-0-
4 1/2"	10.50#	3275'	7 7/8"	900 Sx.	-0-

29. LINER RECORD

SIZE	TOP (MD)	BOTTOM (MD)	SACKS CEMENT*	SCREEN (MD)

30. TUBING RECORD

SIZE	DEPTH SET (MD)	PACKER SET (MD)
2 3/8"	3109'	3109'

31. PERFORATION RECORD (Interval, size and number)
Perforated 4 1/2" OD Csg w/ 2-JSPF @ 3155', 3167' & 3182'.

32. ACID, SHOT, FRACTURE, CEMENT SQUEEZE, ETC.

DEPTH INTERVAL (MD)	AMOUNT AND KIND OF MATERIAL USED
3155'- 3182'	1500 gal. 15% NE Acid

33.* PRODUCTION

DATE FIRST PRODUCTION	PRODUCTION METHOD (Flowing, gas lift, pumping—size and type of pump)	WELL STATUS (Producing or shut-in)
7-1-77	Water Injection	Shut-In

DATE OF TEST	HOURS TESTED	CHOKE SIZE	PROD'N. FOR TEST PERIOD	OIL—BBL.	GAS—MCF.	WATER—BBL.	GAS-OIL RATIO
7-1-77		—	→	—	—	—	—

FLOW. TUBING PRESS.	CASING PRESSURE	CALCULATED 24-HOUR RATE	OIL—BBL.	GAS—MCF.	WATER—BBL.	OIL GRAVITY-API (CORR.)
Injection 700 #	—	→	—	—	1440 BWPD 1-BWPM (Injection Rate)	

34. DISPOSITION OF GAS (Sold, used for fuel, vented, etc.)

TEST WITNESSED BY: N. D. Rogers

35. LIST OF ATTACHMENTS

36. I hereby certify that the foregoing and attached information is complete and correct as determined from all available records

SIGNED [signature] TITLE Assistant Dist. Supt. DATE 7-6-77

*(See Instructions and Spaces for Additional Data on Reverse Side)

COPY TO O.C.C.

Form 9-331
Dec. 1973

Form Approved.
Budget Bureau No. 42-R1424

UNITED STATES
DEPARTMENT OF THE INTERIOR
GEOLOGICAL SURVEY

SUNDRY NOTICES AND REPORTS ON WELLS

(Do not use this form for proposals to drill or to deepen or plug back to a different reservoir. Use Form 9-331-C for such proposals.)

1. oil well ☐ gas well ☐ other Water Inj. well
2. NAME OF OPERATOR
Koch Exploration Company, Div. of Koch Ind., Inc.
3. ADDRESS OF OPERATOR
P. O. Box 2256, Wichita, Kansas 67201
4. LOCATION OF WELL (REPORT LOCATION CLEARLY. See space 17 below.)
AT SURFACE: 1259' FNL & 2183' FWL
AT TOP PROD. INTERVAL:
AT TOTAL DEPTH: "C"

5. LEASE
LC-050107-(a)
6. IF INDIAN, ALLOTTEE OR TRIBE NAME
N/A
7. UNIT AGREEMENT NAME
N/A
8. FARM OR LEASE NAME
Mary E. Wills "A"
9. WELL NO.
13
10. FIELD OR WILDCAT NAME
Rhodes
11. SEC., T., R., M., OR BLK. AND SURVEY OR AREA
Sec. 35-26S-37E
12. COUNTY OR PARISH: Lea
13. STATE: New Mexico
14. API NO.
N/A
15. ELEVATIONS (SHOW DF, KDB, AND WD)
GR 2986'

16. CHECK APPROPRIATE BOX TO INDICATE NATURE OF NOTICE, REPORT, OR OTHER DATA

REQUEST FOR APPROVAL TO:		SUBSEQUENT REPORT OF:
TEST WATER SHUT-OFF	☐	☐
FRACTURE TREAT	☐	☐
SHOOT OR ACIDIZE	☐	☐
REPAIR WELL	☐	☐
PULL OR ALTER CASING	☐	☐
MULTIPLE COMPLETE	☐	☐
CHANGE ZONES	☐	☐
ABANDON*	☒	☐
(other) Plug & abandon		

RECEIVED
OCT 14 1980
U. S. GEOLOGICAL SURVEY
FARMINGTON, N. M.

(NOTE: Report results of multiple completion or zone change on Form 9-330.)

17. DESCRIBE PROPOSED OR COMPLETED OPERATIONS (Clearly state all pertinent details, and give pertinent dates, including estimated date of starting any proposed work. If well is directionally drilled, give subsurface locations and measured and true vertical depths for all markers and zones pertinent to this work.)*

Will be P & A as shown in below steps

1. Top of cement behind 5-1/2" casing at 2160'.
2. Cast iron bridge plug set above perfortions, (if any), with a minimum of 35' of cement on top of cast iron bridge plug. Fill hole with 9.5# salt type mud. Will tag up on plug.
3. 5-1/2" casing will be shot off at 2100'.
4. 100 foot plug (50 feet in and 50 feet out of stub) then 100 foot plug at top of salt formation. Will tag up on plug.
5. 100 foot plug (50 feet in and 50 feet out of shoe of surface casing.) A 10 sx. cement plug at top of surface casing. Will tag up on plug.
6. With a required surface dry hole marker.

RECEIVED
MAY 19 1981
U.S. GEOLOGICAL SURVEY
ROSWELL, NEW MEXICO

Subsurface Safety Valve: Manu. and Type _____ Set @ _____ Ft.

18. I hereby certify that the foregoing is true and correct

SIGNED [signature] TITLE Assistant Operations Mgr. DATE October 7, 1980

(This space for Federal or State office use)

APPROVED BY (Orig. Sgd.) PETER W. CHESTER TITLE _____ DATE _____

CONDITIONS OF APPROVAL, IF ANY:

APPROVED
MAY 5 1981
FOR
JAMES A. GILLHAM
DISTRICT SUPERVISOR

See Instructions on Reverse Side

Form Approved
Budget Bureau No. 42-R1424

UNITED STATES
DEPARTMENT OF THE INTERIOR
GEOLOGICAL SURVEY

SUNDRY NOTICES AND REPORTS ON WELLS

(Do not use this form for proposals to drill or to deepen or plug back to a different reservoir. Use Form 9-331-C for such proposals.)

1. oil well ☐ gas well ☐ other Water Inj. well

2. NAME OF OPERATOR
Koch Exploration Company, Div. of Koch Ind., Inc.

3. ADDRESS OF OPERATOR
P.O. Box 2256, Wichita, Kansas 67201

4. LOCATION OF WELL (REPORT LOCATION CLEARLY. See space 17 below.)
AT SURFACE: 1259' FNL & 2183' FWL
AT TOP PROD. INTERVAL:
AT TOTAL DEPTH:

5. LEASE
LC-950107(a)

6. IF INDIAN, ALLOTTEE OR TRIBE NAME
N/A

7. UNIT AGREEMENT NAME
N/A

8. FARM OR LEASE NAME
Mary E. Wills "A" Federal

9. WELL NO.
13

10. FIELD OR WILDCAT NAME
Rhodes

11. SEC., T., R., M., OR BLK. AND SURVEY OR AREA
Sec. 35-26S-~~27E~~ 37E

12. COUNTY OR PARISH: Lea
13. STATE: New Mexico

14. API NO.
N/A

15. ELEVATIONS (SHOW DF, KDB, AND WD)
GR 2986'

16. CHECK APPROPRIATE BOX TO INDICATE NATURE OF NOTICE, REPORT, OR OTHER DATA

REQUEST FOR APPROVAL TO:		SUBSEQUENT REPORT OF:
TEST WATER SHUT-OFF	☐	☐
FRACTURE TREAT	☐	☐
SHOOT OR ACIDIZE	☐	☐
REPAIR WELL	☐	☐
PULL OR ALTER CASING	☐	☐
MULTIPLE COMPLETE	☐	☐
CHANGE ZONES	☐	☐
ABANDON*	☒	☒
(other) Plug and Abandon		

(NOTE: Report results of multiple completion or zone change on Form 9-330.)

17. DESCRIBE PROPOSED OR COMPLETED OPERATIONS (Clearly state all pertinent details, and give pertinent dates, including estimated date of starting any proposed work. If well is directionally drilled, give subsurface locations and measured and true vertical depths for all markers and zones pertinent to this work.)*

8-12-81 Ran 1" tubing to 3200' set 50 sxs tagged @330'
8-13-81 Backed off 2 7/8 tubing @1215' - Ran 2 3/8 tubing to 1200'
Set 50 sxs tagged @1020'
8-14-81 Set 50 sxs @748' Tagged 520
8-15-81 Set 5 sxs and dry hole marker in top
Well was loaded with 10# mud laden fluid

RECEIVED
AUG 16 1982
OIL CONSERVATION DIVISION
SANTA FE

RECEIVED
OCT 9 1981
OIL & GAS
U.S. GEOLOGICAL SURVEY
ROSWELL, NEW MEXICO

Subsurface Safety Valve: Manu. and Type _____ Set @ _____ Ft.

18. I hereby certify that the foregoing is true and correct

SIGNED [signature] TITLE Mayo Marrs Casing Pulling Inc. DATE 9-8-81

(This space for Federal or State office use)

APPROVED BY _____ TITLE _____ DATE _____
CONDITIONS OF APPROVAL, IF ANY:

*See Instructions on Reverse Side

m

APPROVED

COPY TO O.C.C.

NOV 15 1962

(SUBMIT IN TRIPLICATE)

Budget Bureau No. 42-R358.4.
Approval expires 12-31-62.

SANTA FE

Land Office

Lease No. LC 029387 A

UNITED STATES
DEPARTMENT OF THE INTERIOR
GEOLOGICAL SURVEY

RECEIVED
NOV 14 1962
U. S. GEOLOGICAL SURVEY
ROSWELL, NEW MEXICO

SUNDRY NOTICES AND REPORTS ON WELLS

NOTICE OF INTENTION TO DRILL		SUBSEQUENT REPORT OF WATER SHUT-OFF	X
NOTICE OF INTENTION TO CHANGE PLANS		SUBSEQUENT REPORT OF SHOOTING OR ACIDIZING	
NOTICE OF INTENTION TO TEST WATER SHUT-OFF		SUBSEQUENT REPORT OF ALTERING CASING	
NOTICE OF INTENTION TO RE DRILL OR REPAIR WELL		SUBSEQUENT REPORT OF RE-DRILLING OR REPAIR	
NOTICE OF INTENTION TO SHOOT OR ACIDIZE		SUBSEQUENT REPORT OF ABANDONMENT	
NOTICE OF INTENTION TO PULL OR ALTER CASING		SUPPLEMENTARY WELL HISTORY	X
NOTICE OF INTENTION TO ABANDON WELL			

(INDICATE ABOVE BY CHECK MARK NATURE OF REPORT, NOTICE, OR OTHER DATA)

Water Injection Well
Mary E. Mills Federal
November 14, 1962

Well No. 13 is located 1980 ft. from {N/S} line and 2080 ft. from {E/W} line of sec. 35

NE/4 NW/4 Sec. 35 (¼ Sec. and Sec. No.) 20 S (Twp.) 37 E (Range) NMPM (Meridian)

Jalmat (Field) Lea (County or Subdivision) New Mexico (State or Territory)

The elevation of the derrick floor above sea level is 2993 ft.

DETAILS OF WORK

(State names of and expected depths to objective sands; show sizes, weights, and lengths of proposed casings; indicate mudding jobs, cementing points, and all other important proposed work)

Drilled 6 1/4" hole to 3316, total depth. Cemented 2 7/8" 6.5# J-55 casing at 3315 with 200 sacks 50/50 Pozmix plus 2% Gel. Plug down 7:15 A.M. 10/28/62. WOC 24 hours and pressure tested casing with 1000# for 30 minutes, test O.K.

11/1/62: Perforated 3246-48 and 3252-56 with 2 holes per foot.

11/3/62: Treated with 500 gallons 15% regular acid, flushed with water. Maximum pressure 1500#, minimum 600#.

11/9/62: Started water injection.

I understand that this plan of work must receive approval in writing by the Geological Survey before operations may be commenced.

Company Rock Island Oil & Refining Company

Address c/o Oil Reports & Gas Services

Box 763

Hobbs, New Mexico

By A. L. Smith

Title Agent

GPO 862040