SWD-128
New Conv 27

901 WEST MISSOURI AVE.

(915) 683-4616

ROBERT D. FITTING & ASSOCIATES, INC.
Petroleum Engineering & Geological Consultants
MIDLAND, TEXAS 79701

August 9, 1972

New Mexico Oil Conservation Commission
P. O. Box 2088
Santa Fe, New Mexico 87501

Re: Carter Foundation Production Company,
E. C. Hill Federal "E" No. 1,
Teague Ellenburger Pool,
Lea County, New Mexico
Conversion to Salt Water Disposal

Gentlemen:

Carter Foundation Production Company respectfully requests administrative approval to convert to salt water disposal within the Ellenburger Formation their E. C. Hill Federal "E" No. 1-A, Section 34, Township 23-South, Range 37-East, Lea County, New Mexico, in exception to Rule 701-A. According to Rule 701-C, this application is eligible for consideration without notice and hearing, as the water to be disposed and the water within the disposal formation are both mineralized and unfit for domestic, stock, irrigation or other general use. The disposal formation is older than Triassic and is nonproductive of oil or gas within two miles of the proposed injection well.

The last reported oil and gas production from the Teague Ellenburger Pool was in February 1971. All wells previously completed in the Teague Ellenburger Pool have been plugged and abandoned, recompleted in shallower pools, or used for water disposal. The exception is the proposed injection well and the Carter Foundation Production Company, E. C. Hill Federal "E" No. 2-H, Section 34, Township 23-South, Range 37-East. Pending further study, a proposal to recomplete or abandon No. 2-H will soon be submitted. Upon approval of this application, the present disposal well, E. C. Hill Federal "E" No. 5-E, Section 35, Township 23-South, Range 37-East, will be proposed for abandonment due to mechanical difficulties.

In support of this application, enclosed are the following:

1. Plat showing the location of the proposed disposal well and all other wells within a radius of two miles.

2. Gamma Ray-Neutron Log of the proposed disposal well.

3. A diagrammatic sketch of the proposed disposal well showing all casing strings and cement jobs, proposed tubing and packer setting, and open-hole interval.

4. Approximately 10 barrels per day of highly mineralized water produced from Teague Devonian and Simpson wells will be disposed of by gravity flow into the Ellenburger open-hole interval 9654-9733'.

5. Form C-108, Application to Dispose of Salt Water by Injection into a Porous Formation.

6. Copies of the latest water analyses of produced Ellenburger water and the mixture of Devonian and Simpson waters for disposal.

7. Copy of Request for Waiver letter sent to surface lessee and all offset operators holding deep rights within one-half mile of the proposed salt water disposal well.

Correspondence regarding this application should be directed to 901 West Missouri, Midland, Texas 79701.

Yours very truly,

Robert D. Fitting

Robert D. Fitting

RDF:jd
Encl -
cc: State Engineer
Capitol Building
Santa Fe, New Mexico 87501

United States Department of the Interior
Geological Survey
P. O. Drawer 1857
Roswell, New Mexico 88201

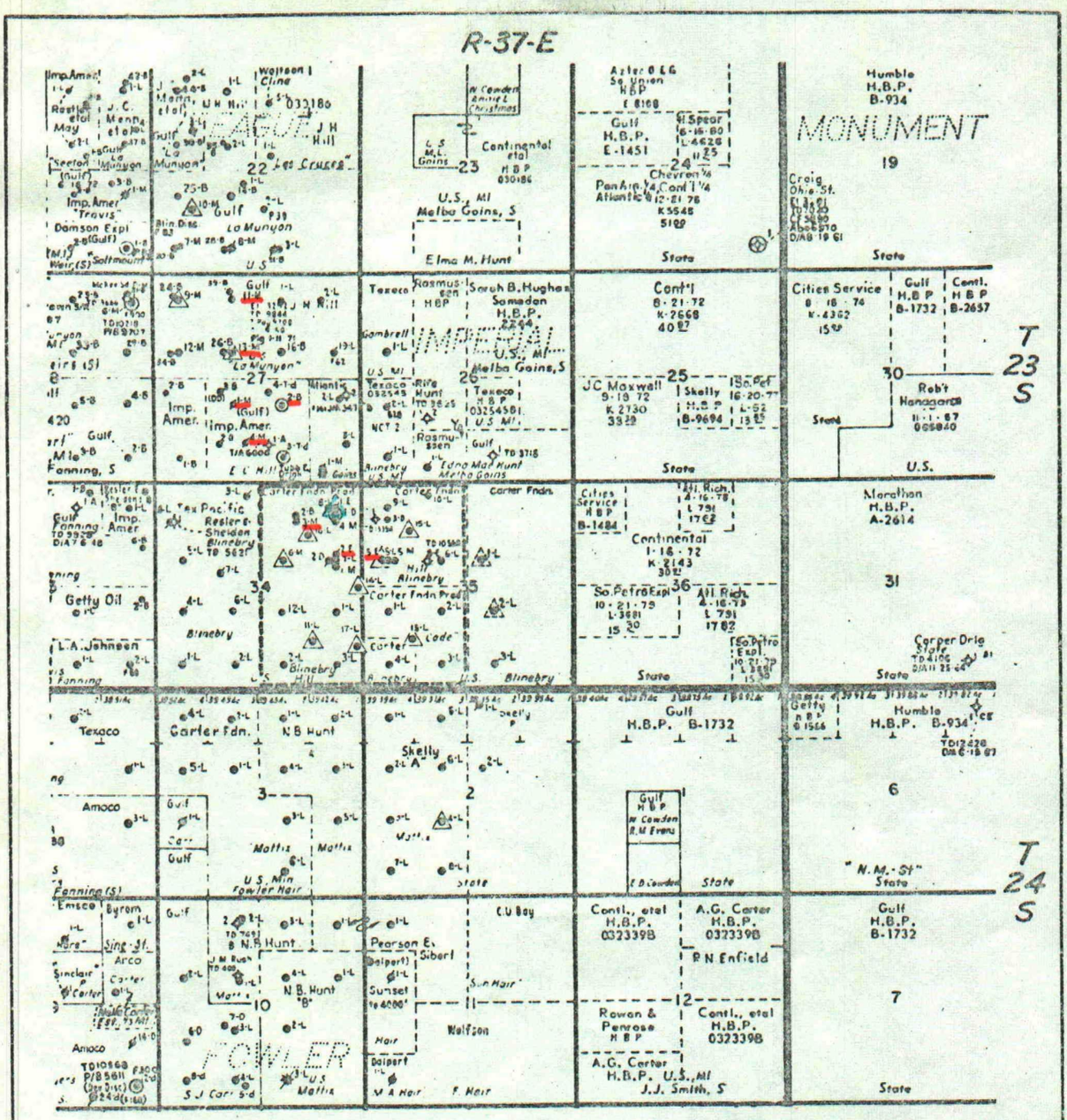

TEAGUE (MULTI-PAY) FIELD AREA
LEA COUNTY, NEW MEXICO

SHOWING FORMER
TEAGUE ELLENBURGER COMPLETIONS

LEGEND

- 1-L Langlie-Mattix Producer
- 1-B Blinebry Producer
- 1-T Tubb Producer
- 1-d Drinkard Producer
- 1-D Devonian Producer
- 1-M McKee Producer
- 1-E Ellenburger Producer (Formerly)
- Water Injection Well
- Proposed Water Injection Well

0 2000' 4000'

6-2-72

DIAGRAMMATIC SKETCH SHOWING SWD COMPLETION INSTALLATION

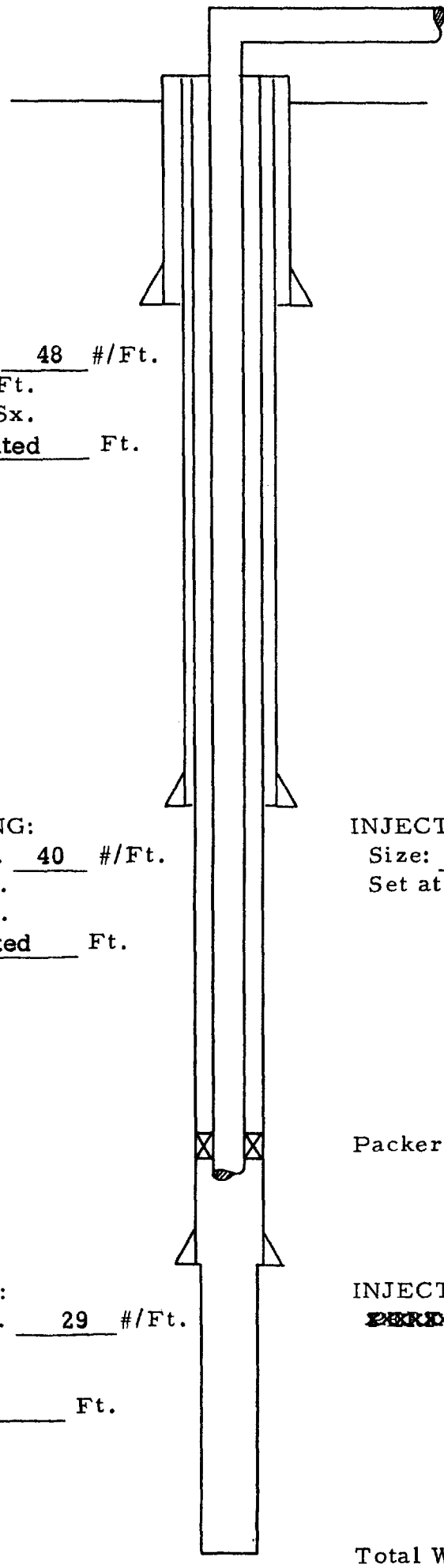

SURFACE CASING:
Size: 13-3/8" Wt. 48 #/Ft.
Set at 321 Ft.
Cement: 450 Sx.
Top Cement: Circulated Ft.

INTERMEDIATE CASING:
Size: 9-5/8" Wt. 40 #/Ft.
Set at 2895 Ft.
Cement: 1600 Sx.
Top Cement: Circulated Ft.

LONG STRING CASING:
Size: 7" Wt. 29 #/Ft.
Set at 9654 Ft.
Cement: 500 Sx.
Top Cement: 6822 Ft.

INJECTION STRING:
Size: 2" Wt. 4.7
Set at 9500 Ft.

Packer set at 9500 Ft.

INJECTION ZONE:
~~PERF~~ - OH From 9654' To 9733'

Total Well Depth 9733 Ft.

DATE: 8-9-72

FIELD Teague Ellenburger COUNTY Lea ~~STATE~~ New Mexico

OPERATOR Carter Foundation Production Company LEASE E.C. Hill Fed. "E" ~~WELL~~ WELL NO. 1

Form C-108
Revised 1-1-65

NEW MEXICO OIL CONSERVATION COMMISSION

APPLICATION TO DISPOSE OF SALT WATER BY INJECTION INTO A POROUS FORMATION

OPERATOR	ADDRESS
Carter Foundation Production Company	P. O. Box 900, Kermit, Texas 79745

LEASE NAME	WELL NO.	FIELD	COUNTY
E. C. Hill Federal "E"	1	Teague Ellenburger	Lea

LOCATION

UNIT LETTER A ; WELL IS LOCATED 660 FEET FROM THE North LINE AND 660 FEET FROM THE East LINE, SECTION 34 TOWNSHIP 23-S RANGE 37-E NMPM.

CASING AND TUBING DATA

NAME OF STRING	SIZE	SETTING DEPTH	SACKS CEMENT	TOP OF CEMENT	TOP DETERMINED BY
SURFACE CASING	13-3/8"	321'	450	Surface	Circulated
INTERMEDIATE	9-5/8"	2895'	1600	Surface	Circulated
LONG STRING	7"	9654'	500	6822'	Temp. Survey
TUBING: Proposed	2"	9500'	NAME, MODEL AND DEPTH OF TUBING PACKER: Guiberson KV-30 @ 9500'		

NAME OF PROPOSED INJECTION FORMATION	TOP OF FORMATION	BOTTOM OF FORMATION
Ellenburger	9625'	9733' TD

IS INJECTION THROUGH TUBING, CASING, OR ANNULUS?	PERFORATIONS OR OPEN HOLE?	PROPOSED INTERVAL(S) OF INJECTION
Tubing	Open Hole	9654-9733'

IS THIS A NEW WELL DRILLED FOR DISPOSAL?	IF ANSWER IS NO, FOR WHAT PURPOSE WAS WELL ORIGINALLY DRILLED?	HAS WELL EVER BEEN PERFORATED IN ANY ZONE OTHER THAN THE PROPOSED INJECTION ZONE?
No	Oil	No

LIST ALL SUCH PERFORATED INTERVALS AND SACKS OF CEMENT USED TO SEAL OFF OR SQUEEZE EACH

-

DEPTH OF BOTTOM OF DEEPEST FRESH WATER ZONE IN THIS AREA	DEPTH OF BOTTOM OF NEXT HIGHER OIL OR GAS ZONE IN THIS AREA	DEPTH OF TOP OF NEXT LOWER OIL OR GAS ZONE IN THIS AREA
300'	9430'	None

ANTICIPATED DAILY INJECTION VOLUME (BBLS.) MINIMUM	MAXIMUM	OPEN OR CLOSED TYPE SYSTEM	IS INJECTION TO BE BY GRAVITY OR PRESSURE?	APPROX. PRESSURE (PSI)
5	100	Closed	Gravity	-

ANSWER YES OR NO WHETHER THE FOLLOWING WATERS ARE MINERALIZED TO SUCH A DEGREE AS TO BE UNFIT FOR DOMESTIC, STOCK, IRRIGATION, OR OTHER GENERAL USE –	WATER TO BE DISPOSED OF	NATURAL WATER IN DISPOSAL ZONE	ARE WATER ANALYSES ATTACHED?
	Yes	Yes	Yes

NAME AND ADDRESS OF SURFACE OWNER (OR LESSEE, IF STATE OR FEDERAL LAND)

✓ Mrs. Melba Goins - Eunice, New Mexico 88231

LIST NAMES AND ADDRESSES OF ALL OPERATORS WITHIN ONE-HALF (½) MILE OF THIS INJECTION WELL

✓ Gulf Oil Company - U.S., Box 1150, Midland, Texas 79701

✓ Imperial-American Management Co., 507 Midland Savings Bldg., Midland, Texas 79701

✓ Texaco, Inc., Box 3109, Midland, Texas 79701

✓ Texas Pacific Oil Company, Inc., Box 4067, Midland, Texas 79701

(The Teague (Ellenburger) Pool is now non-productive of oil or gas)

HAVE COPIES OF THIS APPLICATION BEEN SENT TO EACH OF THE FOLLOWING?	SURFACE OWNER	EACH OPERATOR WITHIN ONE-HALF MILE OF THIS WELL	THE NEW MEXICO STATE ENGINEER
	Yes	Yes	Yes
ARE THE FOLLOWING ITEMS ATTACHED TO THIS APPLICATION (SEE RULE 701-B)	PLAT OF AREA	ELECTRICAL LOG	DIAGRAMMATIC SKETCH OF WELL
	Yes	Yes	Yes

I hereby certify that the information above is true and complete to the best of my knowledge and belief.

Robert D. Fitting	Agent	August 9, 1972
(Signature)	*(Title)*	*(Date)*

NOTE: Should waivers from the State Engineer, the surface owner, and all operators within one-half mile of the proposed injection well. not accompany this application, the New Mexico Oil Conservation Commission will hold the application for a period of 15 days from the date of receipt by the Commission's Santa Fe office. If at the end of the 15-day waiting period no protest has been received by the Santa Fe office, the application will be processed. If a protest is received, the application will be set for hearing, if the applicant so requests. SEE RULE 701.

Martin Water Laboratories
P. O. BOX 1468 PHONE 943-3[illegible]
MONAHANS, TEXAS 79756
.06 W. ILLINOIS PHONE 683-4521
MIDLAND, TEXAS 79701

RESULT OF WATER ANALYSES

LABORATORY NO. 968158
SAMPLE RECEIVED 9-26-68
RESULTS REPORTED 10-3-68

TO: Mr. Carter Magendie
P. O. Box 900, Kermit, Texas

COMPANY Carter Foundation Production Co LEASE Hill
FIELD OR POOL Simpson

SECTION _____ BLOCK _____ SURVEY _____ COUNTY Lea STATE N. M.

SOURCE OF SAMPLE AND DATE TAKEN:

NO. 1 Raw water - taken from water supply well #2-2. 9-26-68
NO. 2
NO. 3
NO. 4

REMARKS:

CHEMICAL AND PHYSICAL PROPERTIES

	NO. 1	NO. 2	NO. 3	NO. 4
Specific Gravity at 60° F.	1.1416			
pH When Sampled				
pH When Received	7.0			
Total Alkalinity as $CaCO_3$	72			
Supersaturation as $CaCO_3$	16			
Undersaturation as $CaCO_3$	-			
Total Hardness as $CaCO_3$	47,000			
Calcium as $CaCO_3$	39,050			
Magnesium as $CaCO_3$	7,950			
Sodium and/or Potassium				
Sulfate as SO_4	560			
Chloride as NaCl	231,660			
Iron as Fe	4.4			
Barium as Ba	0			
Turbidity, Electric	36.4			
Color as Pt	20			
Total Solids, Calculated				
Temperature °F.				
Carbon Dioxide, Calculated	14			
Dissolved Oxygen, Winkler				
Hydrogen Sulfide	0.0			
Resistivity, ohms/m at 60° F.	0.071			
Suspended Oil				
Filterable Solids as mg/l	36.0			
Volume Filtered, ml	400			

Results Reported As Milligrams Per Liter

Additional Determinations And Remarks

The above results show the condition of primary concern is the high filtrable solids. Microscopically this showed to be a combination of iron sulfide and heavy hydrocarbon particles in the paraffinic and asphaltic range. This is a normal condition at the wellhead when oil is present, and it would be necessary to examine the water in an injection system to evaluate the quality after separation time is allowed. We would suggest a more extensive examination of the system handling this water, as based on this quality, this water would have substantial plugging effects. The water is also considered substantially corrosive and particularly sensitive to air contamination.

Form No. 1

cc: Mr. Ven O. White

BY _____

Waylan C. Martin, M. A.

Martin Water Laboratories

P. O. BOX 1468 PHONE 943-3234
MONAHANS, TEXAS 79756

406 W. ILLINOIS PHONE 683-4521
MIDLAND, TEXAS 79701

RESULT OF WATER ANALYSES

LABORATORY NO. 371204
SAMPLE RECEIVED 3-29-71
RESULTS REPORTED 4-5-71

TO: Mr. Robert D. Fitting & Assoc.
901 W. Missouri, Midland, Texas

COMPANY Carter Foundation Production Co. LEASE
FIELD OR POOL Langlie-Mattix
SECTION ___ BLOCK ___ SURVEY ___ COUNTY Lea STATE N. M.

SOURCE OF SAMPLE AND DATE TAKEN:

NO. 1 Produced water - taken from co-mingled water tank. 3-26-71

NO. 2

NO. 3

NO. 4

REMARKS: ~~Penrose~~ [Devonian, & McKee] No - reinjected in Bline-Cade W.F.

CHEMICAL AND PHYSICAL PROPERTIES	NO. 1	NO. 2	NO. 3	NO. 4
Specific Gravity at 60° F.	1.0802			
pH When Sampled				
pH When Received	7.5			
Bicarbonate as HCO_3	493			
Supersaturation as $CaCO_3$	100			
Undersaturation as $CaCO_3$	-			
Total Hardness as $CaCO_3$	31,000			
Calcium as Ca	4,160			
Magnesium as Mg	5,006			
Sodium and/or Potassium	32,958			
Sulfate as SO_4	3,951			
Chloride as Cl	69,599			
Iron as Fe	39.8			
Barium as Ba	0			
Turbidity, Electric	179			
Color as Pt	8			
Total Solids, Calculated	116,167			
Temperature °F.				
Carbon Dioxide, Calculated	26			
Dissolved Oxygen, Winkler	0.0			
Hydrogen Sulfide	45.0			
Resistivity, ohms/m at 77° F.	0.132			
Suspended Oil				
Filtrable Solids as mg/l	855			
Volume Filtered, ml	250			

Results Reported As Milligrams Per Liter

Additional Determinations And Remarks These results reveal no characteristic that would be incompatible with the Penrose. However, we find rather severely detrimental conditions existing in this water alone. This involves distinct calcium carbonate and calcium sulfate scaling tendencies. It also had a severe iron sulfide precipitate. Also, in conjunction with this there were some heavy hydrocarbons to make all these conditions together result in a severe filtrable solids. We would therefore classify this as a severely plugging water. We would suggest samples be submitted from each of the zones represented so that we can make individual analyses and study compatibilities of these waters.

Form No. 3

By Waylan C. Martin, M. A.

901 WEST MISSOURI AVE.

(915) 683-4616

ROBERT D. FITTING & ASSOCIATES, INC.
Petroleum Engineering & Geological Consultants
MIDLAND, TEXAS 79701

August 9, 1972

Mrs. Melba Goins
Eunice, New Mexico 88231

Dear Mrs. Goins:

The Carter Foundation Production Company plans to inject produced salt water into their E. C. Hill Federal "E" #1 well located in Section 34, Township 23-South, Range 37-East, Teague (Ellenburger) Field, Lea County, New Mexico, in an interval from 9654' to 9733'.

The purpose of this letter is to request a waiver of objection for the injection of produced salt water. If you agree to this waiver, please sign and return one copy of this letter in the enclosed self-addressed envelope.

Yours very truly,

Robert D. Fitting

Robert D. Fitting

RDF:jd
Encl - Application to Dispose of Salt Water
by Injection into a Porous Formation

BY: _____

DATE: _____

901 WEST MISSOURI AVE. (915) 683-4616

ROBERT D. FITTING & ASSOCIATES, INC.
Petroleum Engineering & Geological Consultants
MIDLAND, TEXAS 79701

August 9, 1972

Gulf Oil Company - U. S.
P. O. Box 1150
Midland, Texas 79701

Texaco, Inc.
P. O. Box 3109
Midland, Texas 79701

Imperial-American Management Co.
507 Midland Savings Bldg.
Midland, Texas 79701

Texas Pacific Oil Company, Inc.
P. O. Box 4067
Midland, Texas 79701

Gentlemen:

The Carter Foundation Production Company plans to inject produced salt water into their E. C. Hill Federal "E" #1 well located in Section 34, Township 23-South, Range 37-East, Teague (Ellenburger) Field, Lea County, New Mexico, in an interval from 9654' to 9733'.

The purpose of this letter is to request a waiver of objection for the injection of produced salt water. If you agree to this waiver, please sign and return one copy of this letter in the enclosed self-addressed envelope.

Yours very truly,

Robert D. Fitting

Robert D. Fitting

RDF:jd
Encl - Application to Dispose of Salt Water
by Injection into a Porous Formation

COMPANY: _____

BY: _____

DATE: _____

TEXACO

PETROLEUM PRODUCTS

PRODUCING DEPARTMENT
CENTRAL UNITED STATES
MIDLAND DIVISION

TEXACO INC.
P. O. BOX 3109
MIDLAND, TEXAS 79701

August 21, 1972

WAIVER FOR FLUID INJECTION
CARTER FOUNDATION PRODUCTION COMPANY
E. C. HILL-FEDERAL "E" NO. 1
SECTION 34, T23S, R37E
TEAGUE (ELLENBURGER) POOL
LEA COUNTY, NEW MEXICO

State of New Mexico
Oil Conservation Commission
P. O. Box 2088
Santa Fe, New Mexico

Attention: Mr. A. L. Porter, Jr.

Gentlemen:

Texaco Inc. has been advised by Carter Foundation Production Company that they have filed an application with the New Mexico Oil Conservation Commission seeking permission to inject produced salt water into their E. C. Hill-Federal "E" No. 1 well located in Section 34, T23S, R37E, Teague (Ellenburger) Pool, Lea County, New Mexico. Injection will be into open hole 9,654 feet to 9,733 feet.

Texaco Inc., as an offset operator, waives objection to this application.

Yours very truly,

Darrell Smith
Division Manager

By R. G. Brown
R. G. Brown
Assistant to Division Manager

CHF/ds

901 WEST MISSOURI AVE.

(915) 683-4616

ROBERT D. FITTING & ASSOCIATES, INC.
Petroleum Engineering & Geological Consultants
MIDLAND, TEXAS 79701

RECEIVED
AUG 21 1972
OIL CONSERVATION COMM.
Santa Fe

August 9, 1972

Gulf Oil Company - U. S.
P. O. Box 1150
Midland, Texas 79701

Texaco, Inc.
P. O. Box 3109
Midland, Texas 79701

✓Imperial-American Management Co.
507 Midland Savings Bldg.
Midland, Texas 79701

Texas Pacific Oil Company, Inc.
P. O. Box 4067
Midland, Texas 79701

Gentlemen:

The Carter Foundation Production Company plans to inject produced salt water into their E. C. Hill Federal "E" #1 well located in Section 34, Township 23-South, Range 37-East, Teague (Ellenburger) Field, Lea County, New Mexico, in an interval from 9654' to 9733'.

The purpose of this letter is to request a waiver of objection for the injection of produced salt water. If you agree to this waiver, please sign and return one copy of this letter in the enclosed self-addressed envelope.

Yours very truly,

Robert D. Fitting

Robert D. Fitting

RDF:jd
Encl - Application to Dispose of Salt Water
by Injection into a Porous Formation

COMPANY: Imperial-American Resources Fund, Inc. - Debtor

BY: [signature]

DATE: August 14, 1972

Gulf Oil Company - U.S.

EXPLORATION AND PRODUCTION DEPARTMENT
MIDLAND DISTRICT

W. B. Hopkins
DISTRICT MANAGER
J. A. Hord
DISTRICT EXPLORATION MANAGER
J. L. Pike
DISTRICT PRODUCTION MANAGER
M. B. Moseley
DISTRICT SERVICES MANAGER

P. O. Drawer 1150
Midland, Texas 79701

August 14, 1972

New Mexico Oil Conservation Commission
P. O. Box 2088
Sante Fe, New Mexico 87501

Gentlemen:

This is to advise that Gulf Oil Corporation has been given due notice that the Carter Foundation Production Company has made application to inject produced salt water into interval 9654 to 9733' in their E. C. Hill Federal "E" Well No. 1 located in Section 34, Township 23-South, Range 37-East, Teague (Ellenburger) Field, Lea County, New Mexico. We hereby waive any objection to the granting of this application for the above well.

Executed this 14th day of August, 1972.

Yours very truly,

GULF OIL CORPORATION

BY W. C. Palmer
W. C. PALMER
District Engineer

FWT:jmc

901 WEST MISSOURI AVE.

(915) 683-4616

ROBERT D. FITTING & ASSOCIATES, INC.
Petroleum Engineering & Geological Consultants
MIDLAND, TEXAS 79701

August 9, 1972

RECEIVED
AUG 21 1972
OIL CONSERVATION COMM.
Santa Fe

Mrs. Melba Goins
Eunice, New Mexico 88231

Dear Mrs. Goins:

The Carter Foundation Production Company plans to inject produced salt water into their E. C. Hill Federal "E" #1 well located in Section 34, Township 23-South, Range 37-East, Teague (Ellenburger) Field, Lea County, New Mexico, in an interval from 9654' to 9733'.

The purpose of this letter is to request a waiver of objection for the injection of produced salt water. If you agree to this waiver, please sign and return one copy of this letter in the enclosed self-addressed envelope.

Yours very truly,

Robert D. Fitting

Robert D. Fitting

RDF:jd
Encl - Application to Dispose of Salt Water
by Injection into a Porous Formation

BY: _____

DATE: 8-16-72

ESTATE OF MELBA F. GOINS, DECEASED
BOX 662, EUNICE, NEW MEXICO

M. L. Goins

MRS. M. L. GOINS, ADMIN.

901 WEST MISSOURI AVE.

(915) 683-4616

ROBERT D. FITTING & ASSOCIATES, INC.
Petroleum Engineering & Geological Consultants
MIDLAND, TEXAS 79701

August 9, 1972

RECEIVED
AUG 21 1972
OIL CONSERVATION COMM.
Santa Fe

Gulf Oil Company - U. S.
P. O. Box 1150
Midland, Texas 79701

Texaco, Inc.
P. O. Box 3109
Midland, Texas 79701

Imperial-American Management Co.
507 Midland Savings Bldg.
Midland, Texas 79701

✓Texas Pacific Oil Company, Inc.
P. O. Box 4067
Midland, Texas 79701

Gentlemen:

The Carter Foundation Production Company plans to inject produced salt water into their E. C. Hill Federal "E" #1 well located in Section 34, Township 23-South, Range 37-East, Teague (Ellenburger) Field, Lea County, New Mexico, in an interval from 9654' to 9733'.

The purpose of this letter is to request a waiver of objection for the injection of produced salt water. If you agree to this waiver, please sign and return one copy of this letter in the enclosed self-addressed envelope.

Yours very truly,

Robert D. Fitting

Robert D. Fitting

RDF:jd
Encl - Application to Dispose of Salt Water
by Injection into a Porous Formation

COMPANY: Texas Pacific Oil Company, Inc.

BY: R. J. Womack Jr

R.J. Womack, District Manager

DATE: August 15, 1972