DATE IN 12/3/01	SUSPENSE 12/18/01	ENGINEER DC	LOGGED BY KV	TYPE SWD

01333937538

ABOVE THIS LINE FOR DIVISION USE ONLY

NEW MEXICO OIL CONSERVATION DIVISION
- Engineering Bureau -

ADMINISTRATIVE APPLICATION COVER SHEET

THIS COVERSHEET IS MANDATORY FOR ALL ADMINISTRATIVE APPLICATIONS FOR EXCEPTIONS TO DIVISION RULES AND REGULATIONS

Application Acronyms:

[NSP-Non-Standard Proration Unit] [NSL-Non-Standard Location]
[DD-Directional Drilling] [SD-Simultaneous Dedication]
[DHC-Downhole Commingling] [CTB-Lease Commingling] [PLC-Pool/Lease Commingling]
[PC-Pool Commingling] [OLS - Off-Lease Storage] [OLM-Off-Lease Measurement]
[WFX-Waterflood Expansion] [PMX-Pressure Maintenance Expansion]
[SWD-Salt Water Disposal] [IPI-Injection Pressure Increase]
[EOR-Qualified Enhanced Oil Recovery Certification] [PPR-Positive Production Response]

[1] **TYPE OF APPLICATION** - Check Those Which Apply for [A]

[A] Location - Spacing Unit - Directional Drilling
☐ NSL ☐ NSP ☐ DD ☐ SD

Check One Only for [B] and [C]

[B] Commingling - Storage - Measurement
☐ DHC ☐ CTB ☐ PLC ☐ PC ☐ OLS ☐ OLM

[C] Injection - Disposal - Pressure Increase - Enhanced Oil Recovery
☐ WFX ☐ PMX ☒ SWD ☐ IPI ☐ EOR ☐ PPR

[2] **NOTIFICATION REQUIRED TO:** - Check Those Which Apply, or ☐ Does Not Apply

[A] ☐ Working, Royalty or Overriding Royalty Interest Owners

[B] ☒ Offset Operators, Leaseholders or Surface Owner

[C] ☐ Application is One Which Requires Published Legal Notice

[D] ☐ Notification and/or Concurrent Approval by BLM or SLO
U.S. Bureau of Land Management - Commissioner of Public Lands, State Land Office

[E] ☒ For all of the above, Proof of Notification or Publication is Attached, and/or,

[F] ☐ Waivers are Attached

[3] **INFORMATION / DATA SUBMITTED IS COMPLETE** - Statement of Understanding

I hereby certify that I, or personnel under my supervision, have read and complied with all applicable Rules and Regulations of the Oil Conservation Division. Further, I assert that the attached application for administrative approval is accurate and complete to the best of my knowledge and where applicable, verify that all interest (WI, RI, ORRI) is common. I understand that any omission of data (including API numbers, pool codes, etc.), pertinent information and any required notification is cause to have the application package returned with no action taken.

Note: Statement must be completed by an individual with supervisory capacity.

Brian Collins	X [signature]	Engineer	28 Nov 01
Print or Type Name	Signature	Title	Date

marbob
energy corporation

November 28, 2001

New Mexico Energy, Minerals
and Natural Resources Department
Oil Conservation Division
1220 South Saint Francis Street
Santa Fe, New Mexico 87504

Attention: Engineering Bureau

RE: Lusk Deep Unit "A" No. 19 (30-025-35244)
660' FSL – 1650' FWL
Section 17-19S-32E
Lea County, New Mexico

Gentlemen:

Enclosed herewith is the Marbob Energy Corporation Application for Authorization to Inject concerning the above referenced well. Application is made pursuant to Rule 701C of the Division Rules and regulations for Administrative Approval for Disposal into the Strawn formation. The waters to be disposed of will consist of produced waters from the Delaware, Bone Springs, Atoka, and Morrow formations. There were no fresh water wells found within one mile of the proposed salt-water disposal well. Publication of Marbob Energy Corporation's intent to utilize the subject well for water disposal has been made in the Hobbs News-Sun, and copies of this Application have been mailed to each leasehold operator and surface owner within one half mile of the well via certified mail.

Marbob Energy Corporation respectfully requests your approval of the before mentioned Application at the expiration of the fifteen day waiting period. If you find further information is needed, please contact Brian Collins in our office.

Sincerely,

Dean Chumbley
Land Department

DC/mm
Enclosures

P.O. Box 227 • Artesia, New Mexico 88211-0227 • (505) 748-3303 • Fax (505) 746-2523

STATE OF NEW MEXICO
ENERGY, MINERALS AND NATURAL
RESOURCES DEPARTMENT

OIL CONSERVATION DIVISION
2040 SOUTH PACHECO
SANTA FE, NEW MEXICO 87505

FORM C-108
Revised 4-1-98

APPLICATION FOR AUTHORIZATION TO INJECT

I. PURPOSE: _____ Secondary Recovery _____ Pressure Maintenance __X__ Disposal _____ Storage
Application qualifies for administrative approval? _____ Yes _____ No

II. OPERATOR: Marbob Energy Corporation

ADDRESS: Post Office Box 227, Artesia, NM 88211-0227

CONTACT PARTY: Brian Collins PHONE: (505)748-3303

III. WELL DATA: Complete the data required on the reverse side of this form for each well proposed for injection. Additional sheets may be attached if necessary.

IV. Is this an expansion of an existing project? _____ Yes __X__ No
If yes, give the Division order number authorizing the project: _____

V. Attach a map that identifies all wells and leases within two miles of any proposed injection well with a one-half mile radius circle drawn around each proposed injection well. This circle identifies the well's area of review.

VI. Attach a tabulation of data on all wells of public record within the area of review which penetrate the proposed injection zone. Such data shall include a description of each well's type, construction, date drilled, location, depth, record of completion, and a schematic of any plugged well illustrating all plugging detail.

VII. Attach data on the proposed operation, including:

1. Proposed average and maximum daily rate and volume of fluids to be injected;
2. Whether the system is open or closed;
3. Proposed average and maximum injection pressure;
4. Sources and an appropriate analysis of injection fluid and compatibility with the receiving formation if other than reinjected produced water; and,
5. If injection is for disposal purposes into a zone not productive of oil or gas at or within one mile of the proposed well, attach a chemical analysis of the disposal zone formation water (may be measured or inferred from existing literature, studies, nearby wells, etc.).

*VIII. Attach appropriate geologic data on the injection zone including appropriate lithologic detail, geologic name, thickness, and depth. Give the geologic name, and depth to bottom of all underground sources of drinking water (aquifers containing waters with total dissolved solids concentrations of 10,000 mg/l or less) overlying the proposed injection zone as well as any such sources known to be immediately underlying the injection interval.

IX. Describe the proposed stimulation program, if any.

*X. Attach appropriate logging and test data on the well. (If well logs have been filed with the Division, they need not be resubmitted).

*XI. Attach a chemical analysis of fresh water from two or more fresh water wells (if available and producing) within one mile of any injection or disposal well showing location of wells and dates samples were taken.

XII. Applicants for disposal wells must make an affirmative statement that they have examined available geologic and engineering data and find no evidence of open faults or any other hydrologic connection between the disposal zone and any underground sources of drinking water.

XIII. Applicants must complete the "Proof of Notice" section on the reverse side of this form.

XIV. Certification: I hereby certify that the information submitted with this application is true and correct to the best of my knowledge and belief.

NAME: Brian Collins TITLE: Engineer

SIGNATURE: X Brian Collins DATE: 11/28/01

* If the information required under Sections VI, VIII, X, and XI above has been previously submitted, it need not be resubmitted. Please show the date and circumstances of the earlier submittal: _____

DISTRIBUTION: Original and one copy to Santa Fe with one copy to the appropriate District Office

III. WELL DATA

A. The following well data must be submitted for each injection well covered by this application. The data must be both in tabular and schematic form and shall include:

(1) Lease name; Well No.; Location by Section, Township and Range; and footage location within the section.

(2) Each casing string used with its size, setting depth, sacks of cement used, hole size, top of cement, and how such top was determined.

(3) A description of the tubing to be used including its size, lining material, and setting depth.

(4) The name, model, and setting depth of the packer used or a description of any other seal system or assembly used.

Division District Offices have supplies of Well Data Sheets which may be used or which may be used as models for this purpose. Applicants for several identical wells may submit a "typical data sheet" rather than submitting the data for each well.

B. The following must be submitted for each injection well covered by this application. All items must be addressed for the initial well. Responses for additional wells need be shown only when different. Information shown on schematics need not be repeated.

(1) The name of the injection formation and, if applicable, the field or pool name.

(2) The injection interval and whether it is perforated or open-hole.

(3) State if the well was drilled for injection or, if not, the original purpose of the well.

(4) Give the depths of any other perforated intervals and detail on the sacks of cement or bridge plugs used to seal off such perforations.

(5) Give the depth to and the name of the next higher and next lower oil or gas zone in the area of the well, if any.

XIV. PROOF OF NOTICE

All applicants must furnish proof that a copy of the application has been furnished, by certified or registered mail, to the owner of the surface of the land on which the well is to be located and to each leasehold operator within one-half mile of the well location.

Where an application is subject to administrative approval, a proof of publication must be submitted. Such proof shall consist of a copy of the legal advertisement which was published in the county in which the well is located. The contents of such advertisement must include:

(1) The name, address, phone number, and contact party for the applicant;

(2) The intended purpose of the injection well; with the exact location of single wells or the Section, Township, and Range location of multiple wells;

(3) The formation name and depth with expected maximum injection rates and pressures; and,

(4) A notation that interested parties must file objections or requests for hearing with the Oil Conservation Division, 2040 South Pacheco, Santa Fe, New Mexico 87505, within 15 days.

NO ACTION WILL BE TAKEN ON THE APPLICATION UNTIL PROPER PROOF OF NOTICE HAS BEEN SUBMITTED.

NOTICE: Surface owners or offset operators must file any objections or requests for hearing of administrative applications within 15 days from the date this application was mailed to them.

APPLICATION FOR AUTHORIZATION TO INJECT
MARBOB ENERGY CORPORATION
LUSK DEEP UNIT 'A' NO. 19

VII: Injection Well Data

1. Proposed Rate of Injection:
   1. Average daily rate of injection: 1,000 barrels
   2. Maximum daily rate of injection: 10,000 barrels

2. Type of System:
   System will be closed

3. Anticipated Injection Pressure:
   Proposed maximum injection pressure = 2270 psi

4. Source of Injection Water:
   Analysis of produced water is attached.

5. Disposal Zone Water Analysis:
   Analysis of disposal zone water is attached. The Strawn is depleted and is not productive within a mile of the Lusk Deep Unit A #19.

VIII Geologic Data

The injection zone is the Strawn limestone from 11358' to 11410'. Any underground sources of drinking water will be shallower than 829 feet.

IX Proposed Conversions / Stimulation Program

If the need to stimulate the well arises, we will probably acidize the Strawn with 10,000 gallons of 15% HCl acid.

X Logging Data

Logs have been filed with the Division.

XI Fresh Water Analysis

There are no fresh water source wells within one mile of the proposed salt water disposal well.

XII Open Faults

After examining available geologic and engineering data, we found no evidence of open faults or any other hydrologic connection between the disposal zone and any underground sources of drinking water.

XIII Proof of Notice

Proof of notice is attached.

Side 1

INJECTION WELL DATA SHEET

OPERATOR: Marbob Energy Corporation

WELL NAME & NUMBER: Lusk Deep Unit 'A' No. 19

WELL LOCATION: 660' - 1650' FWL | N | 17 | 19S | 32E

FOOTAGE LOCATION | UNIT LETTER | SECTION | TOWNSHIP | RANGE

WELLBORE SCHEMATIC

See Attached Wellbore Schematics

WELL CONSTRUCTION DATA

Surface Casing

Hole Size: 17½" Casing Size: 13 3/8" @ 829'

Cemented with: 750 sx. *or* _____ ft^3

Top of Cement: Surface Method Determined: Circulated

Intermediate Casing

Hole Size: 12¼" Casing Size: 8 5/8" @ 4362'

Cemented with: 1185 sx. *or* _____ ft^3

Top of Cement: Surface Method Determined: Circulated

Production Casing

Hole Size: 7 7/8" Casing Size: 5½" @ 12754'

Cemented with: 2650 sx. *or* _____ ft^3

Top of Cement: 4350' Method Determined: Temperature Survey

Total Depth: 12754'

Injection Interval

11358' feet to 11410'

(Perforated or Open Hole; indicate which)

INJECTION WELL DATA SHEET

Tubing Size: 2 7/8" Lining Material: Plastic

Type of Packer: Nickel plated double grip retrievable (Uni-6, Lokset, Arrowset I-X)

Packer Setting Depth: 11275' ±

Other Type of Tubing/Casing Seal (if applicable): _____

Additional Data

1. Is this a new well drilled for injection? _____ Yes X No

   If no, for what purpose was the well originally drilled? Oil and gas production

2. Name of the Injection Formation: Strawn

3. Name of Field or Pool (if applicable): Lusk

4. Has the well ever been perforated in any other zone(s)? List all such perforated intervals and give plugging detail, i.e. sacks of cement or plug(s) used. 12545-76', CIBP + 1 bailer cement @ 12525', 12354-457', CIBP + 1 bailer cement @ 12340', 12292-300', CIBP + 1 bailer cement @ 12275'.

5. Give the name and depths of any oil or gas zones underlying or overlying the proposed injection zone in this area: Underlying - Morrow

   Overlying - Wolfcamp, Bone Springs, Delaware

Well: Lusk Deep Unit A-19

Zero: 17' AGL
KB: 3601'
GL: 3584'

Location: 660' FSL, 1650' FWL
N-17-19S-32E
Lea NM

Casing Program:

Size	Wt.	Grade	Conn.	Depth
13 3/8	48	H40	STC	829'
8 5/8	32	K55	BTC	4362'
5 1/2	17	N-80-110	LTC	12754'
2 7/8"	6.5	N80	EUE	11275'±

Plastic Coated

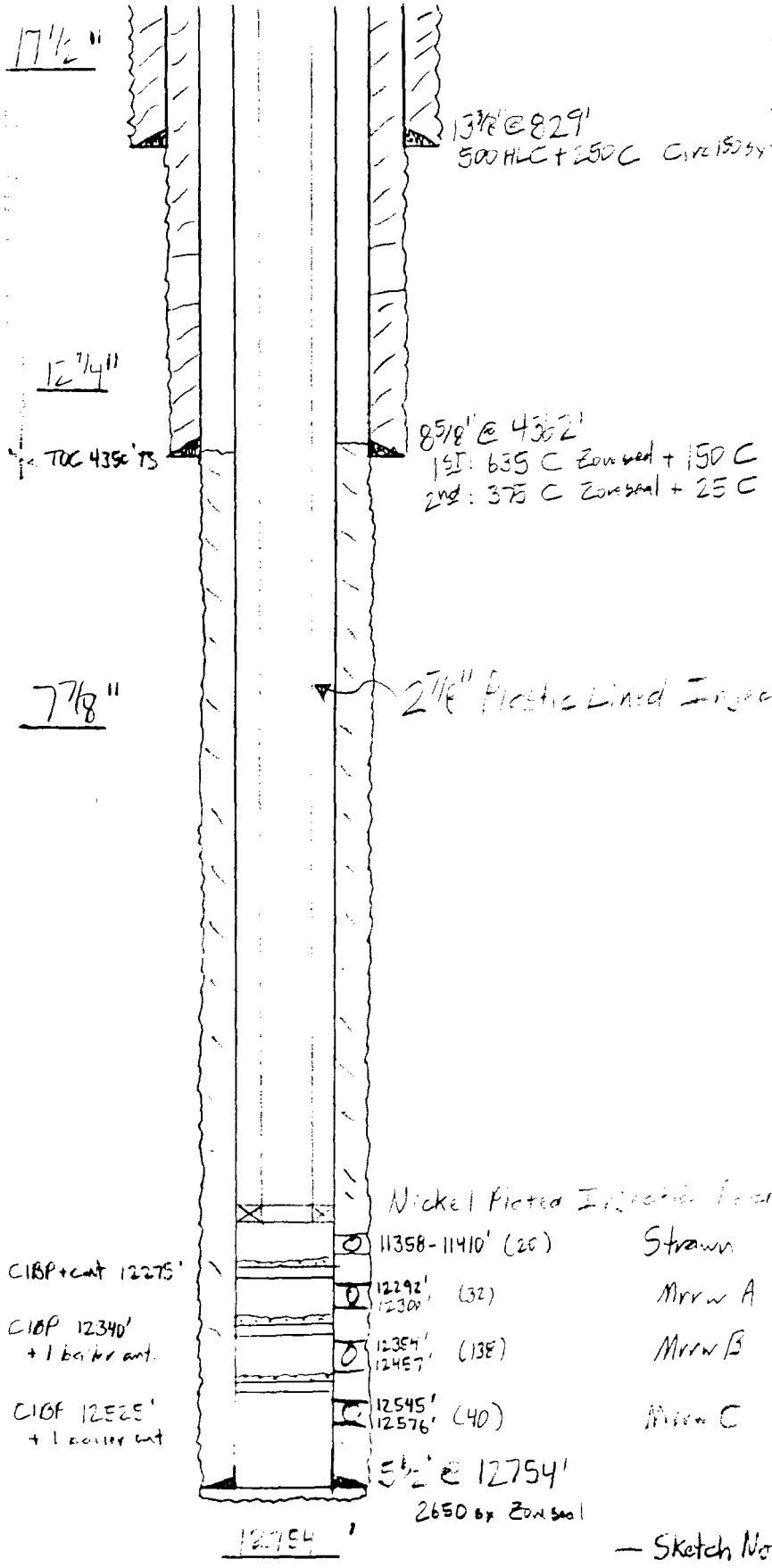

AFTER

— Sketch Not To Scale —

KBCollins/

Well: Lusk Deep Unit A-19

Zero: 17' AGL
KB: 3651'
GL: 3634'

Location: 660' FSL, 1650' FWL
N-17-19S-32E
Lea NM

Casing Program:

Size	Wt.	Grade	Conn.	Depth
13 3/8	48	H40	STC	829'
8 5/8	32	K55	BTC	4362'
5 1/2	[illegible]	K55-110	LTC	12754'

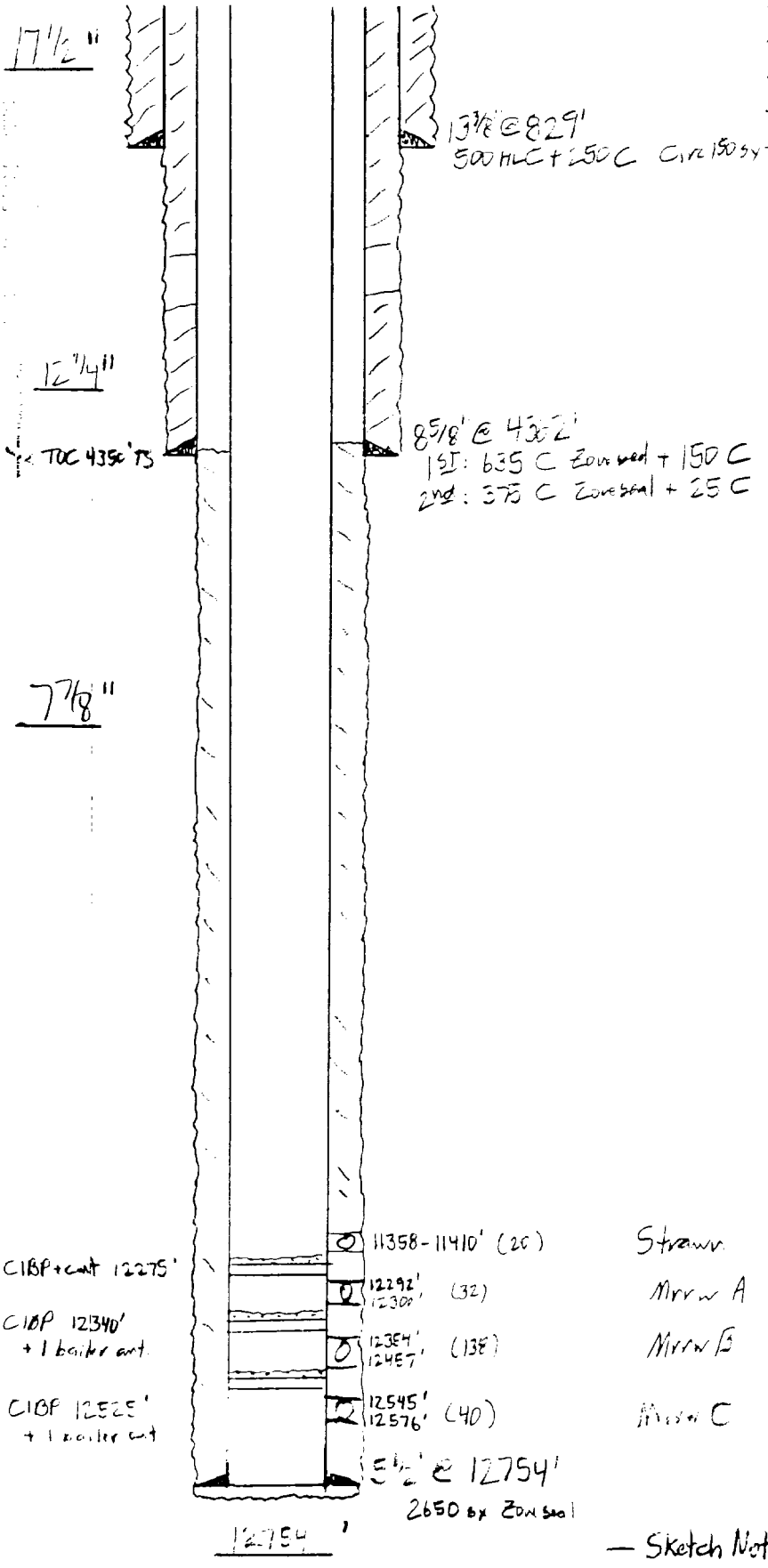

BEFORE

— Sketch Not To Scale —

KBCollins/

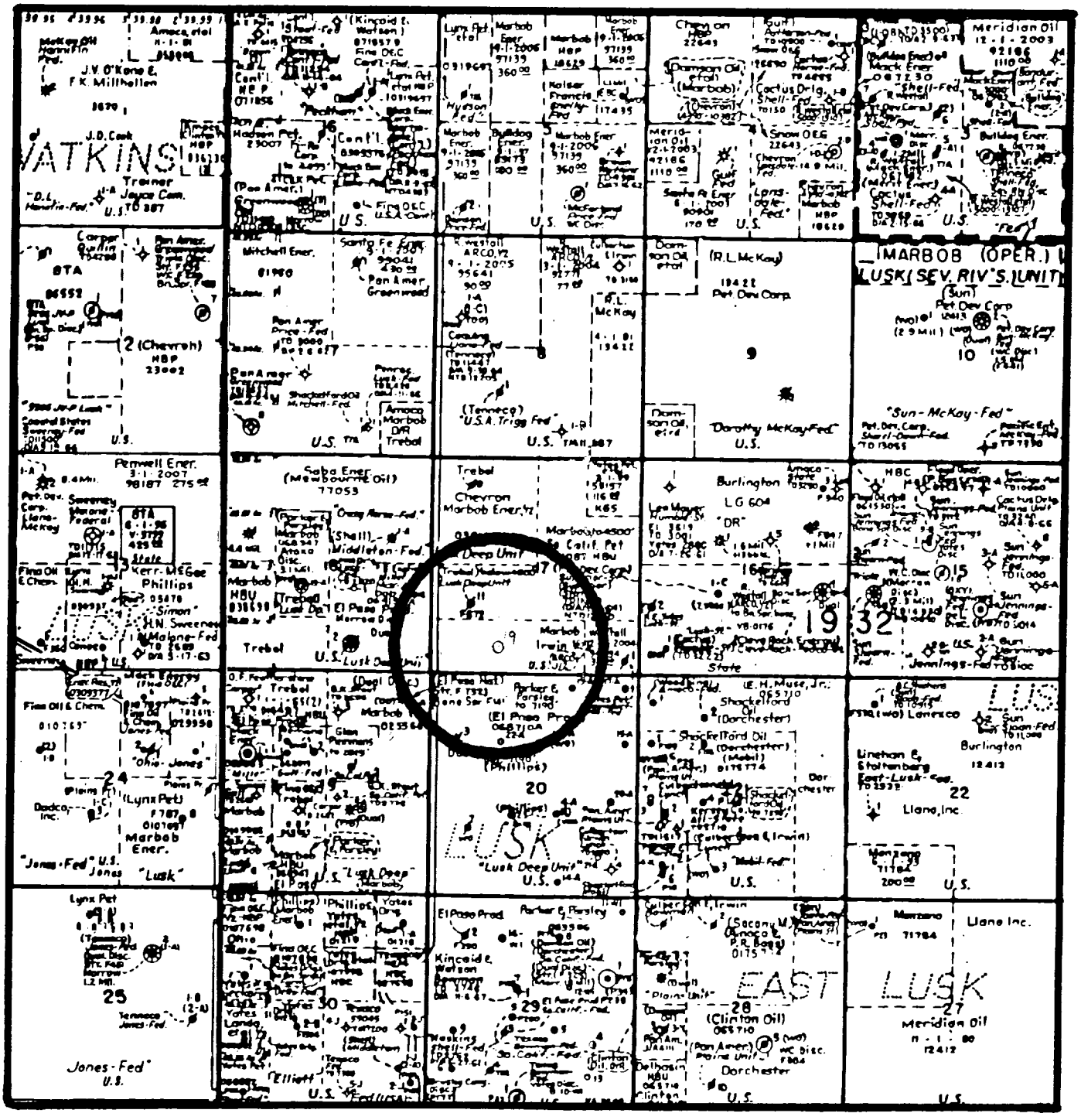

AREA OF REVIEW MAP

Lusk Deep Unit "A" No. 19
660' FSL & 1650' FWL
Sec. 17; T19s - R32e
Lea County, New Mexico

Well Name	Well Type	Casing Construction	Date Drilled	Location	Depth	Completion
Lusk Deep Unit #3	P/A	13 3/8" J-55 54.5# - 807' 9 5/8" N-80 40# - 4532' 5 1/2" 17# - 12439'	Oct. 1961	1650' FNL - 660' FWL Section 20-19S-32E	12,621'	Plugged Oct. 1971
Lusk Deep Unit #11	P/A	13 3/8" 48# - 778' 8 5/8" J-55 32# - 3746' 4 1/2" 11.6# - 11470'	Feb. 1965	1650' FSL - 990' FWL Section 17-19S-32E	11,470'	Plugged Oct. 1971

Well: Lusk Deep Unit 3

Zero: _____
KB: _____
GL: _____

Location: 1650' FNL, 660' FWL
E - 20-19s-32e
Lea Co, NM

Casing Program:

Size	Wt.	Grade	Conn.	Depth
13 3/8"	54.5	J55		807'
9 5/8"	40	N80		4532'
5 1/2"	17			12439'

Drilled October 1961
Plugged October 1971

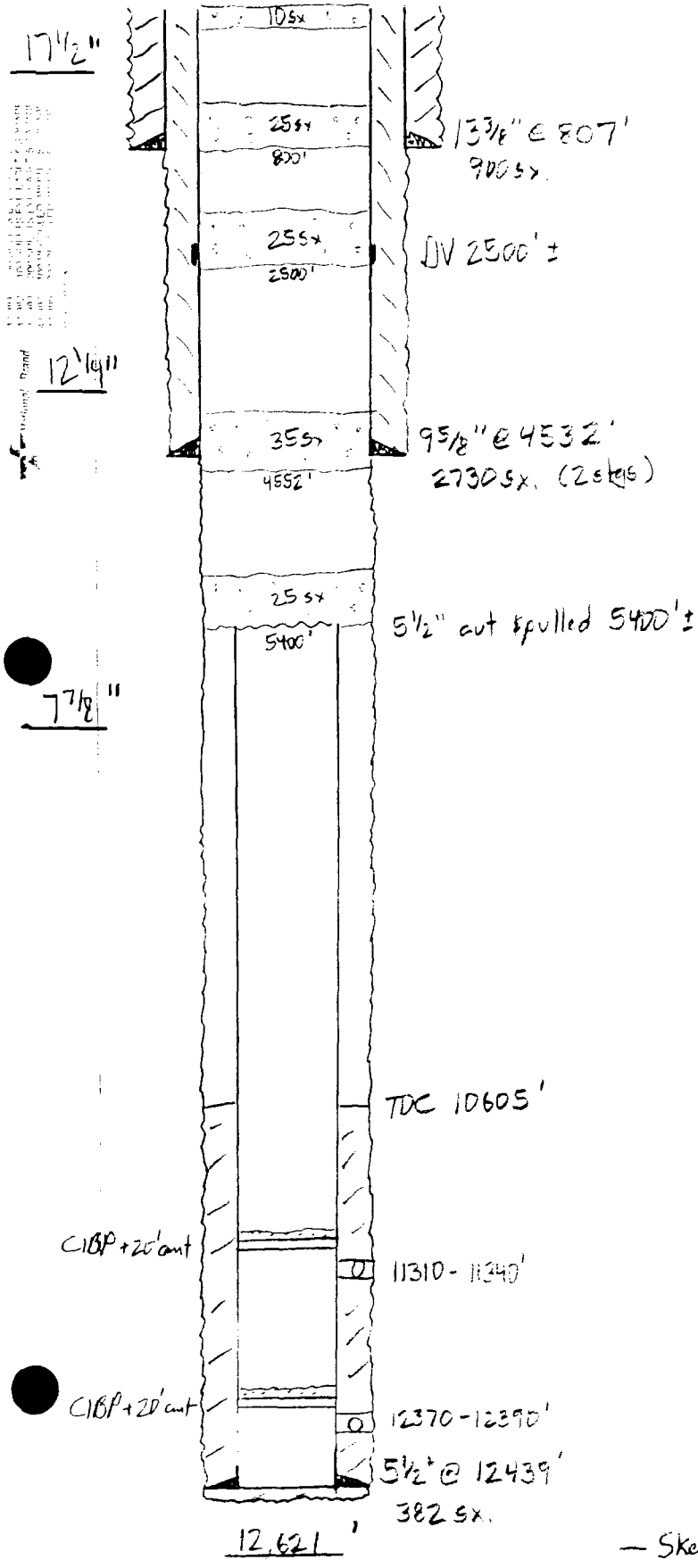

— Sketch Not To Scale —

KBCollins/

Well: Lusk Deep Unit 11

Zero:
KB:
GL:

Location: 1650' FSL, 990' FWL
L-17-19S-32E
Lea Co., NM

Casing Program:

Size	Wt.	Grade	Conn.	Depth
13 3/8"	48			778'
8 5/8"	32	J55		3746'
4 1/2"	11.6			11470'

Drilled February 1965
Plugged October 1971

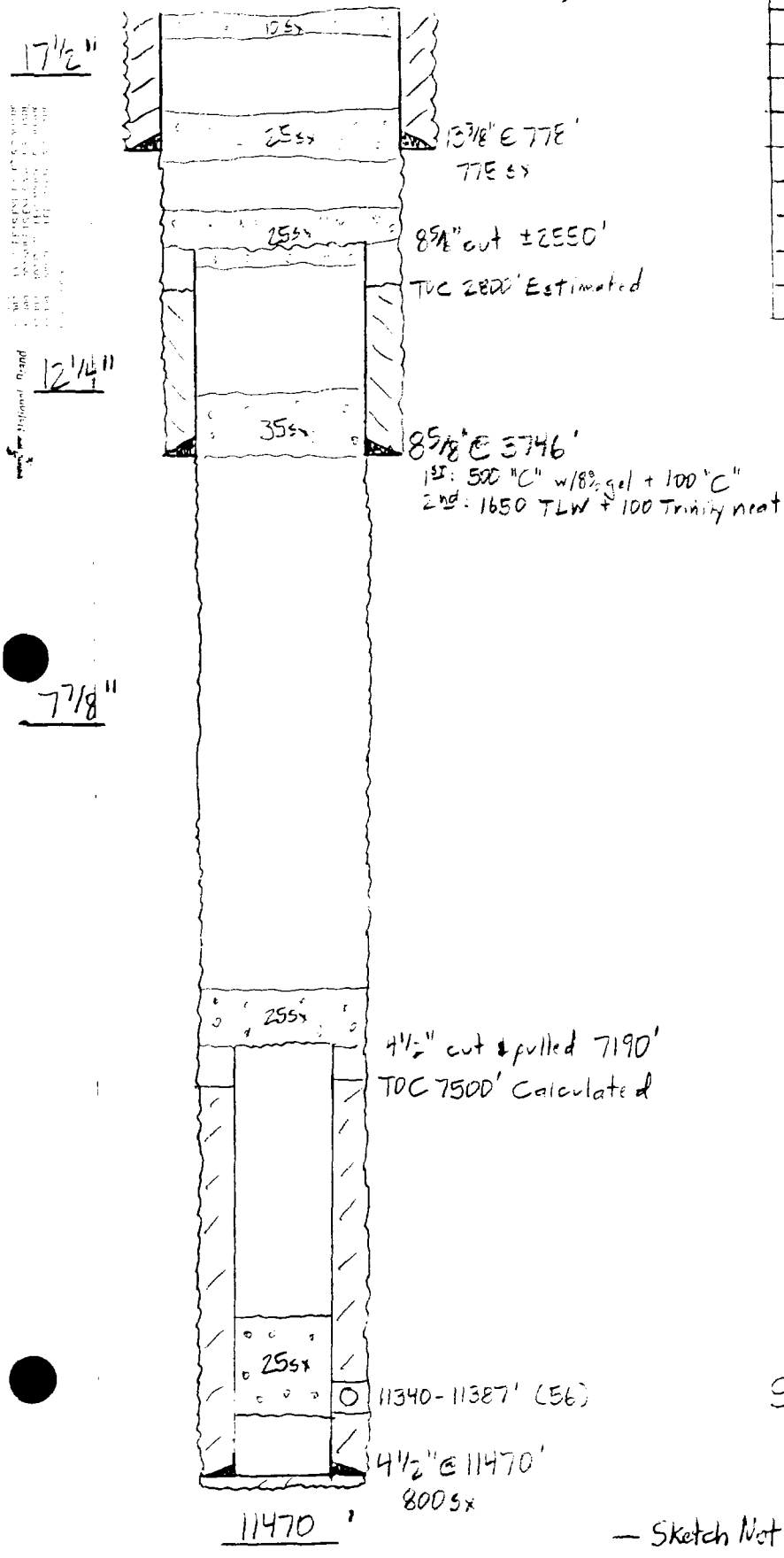

— Sketch Not To Scale —

KBCollins/

HALLIBURTON

CENTRAL OPERATIONS LABORATORY
WATER ANALYSIS REPORT
HOBBS, NEW MEXICO

COMPANY Marbob

REPORT W01-112
DATE November 26, 2001
DISTRICT Artesia/Hobbs

Produced Water

SUBMITTED BY

WELL
COUNTY

DEPTH
FIELD

FORMATION
SOURCE

SAMPLE	Luske 13		Lusk 19		WPB 1			
Sample Temp.	66	°F	66	°F	66	°F		
RESISTIVITY	0.058		0.06		0.058			
SPECIFIC GR.	1.135		1.120		1.135			
pH	6.14		6.19		6.54			
CALCIUM	7,600	mpl	8,200	mpl	4,100	mpl		mpl
MAGNESIUM	5,160	mpl	6,900	mpl	3,000	mpl		mpl
CHLORIDE	134,355	mpl	106,470	mpl	129,285	mpl		mpl
SULFATES	Mod	mpl	light	mpl	Light	mpl		mpl
BICARBONATES	31	mpl	61	mpl	122	mpl		mpl
SOLUBLE IRON	light	mpl	light	mpl	light	mpl		mpl
Sodium		mpl		mpl		mpl	0	mpl
TDS		mpl		mpl		mpl	0	mpl
OIL GRAVITY	@	°F	@	°F	@	°F	@	

REMARKS

Injection Zone Water

MPL = Milligrams per litter
Resitivity measured in: Ohm/m2/m

ANALYST: John Eubank

Produced and injection zone waters are very similar to one another. No compatibility problems anticipated.

HOBBS NEWS-SUN
LEGAL NOTICES

Marbob Energy Corporation, Post Office Box 227, Artesia, New Mexico 88211-0227 has filed Form C-108 (Application for Authorization to Inject) with the New Mexico Oil Conservation Division seeking administrative approval for a salt-water disposal well. The proposed well, the Lusk Deep Unit 'A' No. 19 is located 660' FSL and 1650' FWL, Section 17, Township 19 South, Range 32 East, Lea County, New Mexico. Disposal water will be sourced from area wells producing from the Delaware, Bone Springs, Atoka, and Morrow formations. The disposal water will be injected into the Strawn formation at a depth 11358' - 11410' at a maximum surface pressure of 2270 psi and a maximum rate of 10,000 BWPD. Any interested party who has an objection to this must give notice in writing to the Oil Conservation Division, 1220 South Saint Francis Street, Santa Fe, New Mexico 87505 within fifteen (15) days of this notice. Any interested party with questions or comments may contact Brian Collins at Marbob Energy Corporation, Post Office Box 227, Artesia, New Mexico 88211-0227 or call 505/748-3303.

Published in the Hobbs News-Sun, Hobbs, New Mexico
_____, 2001.

SENDER: COMPLETE THIS SECTION

- Complete items 1, 2, and 3. Also complete item 4 if Restricted Delivery is desired.
- Print your name and address on the reverse so that we can return the card to you.
- Attach this card to the back of the mailpiece, or on the front if space permits.

1. Article Addressed to:

Prize Energy Corporation

3500 William D Tate Ave., Suite 200

Grapevine, TX 76051

Lusk Deep Unit A #19

COMPLETE THIS SECTION ON DELIVERY

A. Signature

X ☐ Agent ☐ Addressee

B. Received by (Printed Name) C. Date of Delivery

D. Is delivery address different from item 1? ☐ Yes
If YES, enter delivery address below: ☐ No

3. Service Type
☑ Certified Mail ☐ Express Mail
☐ Registered ☑ Return Receipt for Merchandise
☐ Insured Mail ☐ C.O.D.

4. Restricted Delivery? (Extra Fee) ☐ Yes

2 7001 1940 0006 6411 4079

PS Form 3811, August 2001 Domestic Return Receipt 102595-01-M-2509

SENDER: COMPLETE THIS SECTION

- Complete items 1, 2, and 3. Also complete item 4 if Restricted Delivery is desired.
- Print your name and address on the reverse so that we can return the card to you.
- Attach this card to the back of the mailpiece, or on the front if space permits.

1. Article Addressed to:

BP / Arco

P O Box 3092

HOuston, TX 77253

Lusk Deep Unit #19

COMPLETE THIS SECTION ON DELIVERY

A. Signature

X ☐ Agent ☐ Addressee

B. Received by (Printed Name) C. Date of Delivery

D. Is delivery address different from item 1? ☐ Yes
If YES, enter delivery address below: ☐ No

3. Service Type
☑ Certified Mail ☐ Express Mail
☐ Registered ☑ Return Receipt for Merchandise
☐ Insured Mail ☐ C.O.D.

4. Restricted Delivery? (Extra Fee) ☐ Yes

2 7001 1940 0006 6411 4109

PS Form 3811, August 2001 Domestic Return Receipt 102595-01-M-2509

SENDER: COMPLETE THIS SECTION

- Complete items 1, 2, and 3. Also complete item 4 if Restricted Delivery is desired.
- Print your name and address on the reverse so that we can return the card to you.
- Attach this card to the back of the mailpiece, or on the front if space permits.

1. Article Addressed to:

Mr. Ray Westall

P O Box 4

Loco Hills, NM 88255

Lusk Deep UNit #19

COMPLETE THIS SECTION ON DELIVERY

A. Signature

X ☐ Agent ☐ Addressee

B. Received by (Printed Name) C. Date of Delivery

D. Is delivery address different from item 1? ☐ Yes
If YES, enter delivery address below: ☐ No

3. Service Type
☑ Certified Mail ☐ Express Mail
☐ Registered ☑ Return Receipt for Merchandise
☐ Insured Mail ☐ C.O.D.

4. Restricted Delivery? (Extra Fee) ☐ Yes

2 7001 1940 0006 6411 4086

PS Form 3811, August 2001 Domestic Return Receipt 102595-01-M-2509

SENDER: COMPLETE THIS SECTION

- Complete items 1, 2, and 3. Also complete item 4 if Restricted Delivery is desired.
- Print your name and address on the reverse so that we can return the card to you.
- Attach this card to the back of the mailpiece, or on the front if space permits.

1. Article Addressed to:

Bureau of Land Department

2909 W. 2nd St.

Roswell,NM 88201

Lusk Deep Unit A #19

COMPLETE THIS SECTION ON DELIVERY

A. Signature

X ☐ Agent ☐ Addressee

B. Received by (Printed Name) C. Date of Delivery

D. Is delivery address different from item 1? ☐ Yes
If YES, enter delivery address below: ☐ No

3. Service Type
☑ Certified Mail ☐ Express Mail
☐ Registered ☑ Return Receipt for Merchandise
☐ Insured Mail ☐ C.O.D.

4. Restricted Delivery? (Extra Fee) ☐ Yes

2 7001 1940 0006 6411 4093