TEXACO
INC.

PETROLEUM PRODUCTS

P. O. Box 728
Hobbs, New Mexico
April 26, 1962

New Mexico Oil Conservation Commission
P. O. Box 871
Santa Fe, New Mexico

Re: Revision of Application dated April 10, 1962, for Permit to Commingle Production, TEXACO Inc., A. H. Blinebry (NCT-3) Lease, Drinkard-Tubb (Gas) Blinebry (Oil) Pools, Lea County, New Mexico

ATTENTION: Mr. A. L. Porter, Jr.

Gentlemen:

In accordance with New Mexico Oil Conservation Commission Rule 303 (b), TEXACO Inc. hereby makes application for administrative approval of an exception to Rule 303 (a) to permit commingling operations to be conducted on the A. H. Blinebry (NCT-3) Lease, Drinkard-Tubb (Gas) Blinebry (Oil) Pools, Lea County, New Mexico, in support of which is stated the following:

1. TEXACO Inc. is the owner and operator of the A. H. Blinebry (NCT-3) Lease, consisting of 160 acres being the N/2 of the NW/4 and SW/4 of NW/4 and NW/4 of NE/4, Section 31, Township 22 South, Range 38 East, Lea County, New Mexico. Attached is a plat showing the location of all wells on this lease and the pools from which they are producing.

2. The A. H. Blinebry Lease has one producing well consisting of a dual completion in the Tubb (Gas) and Blinebry (Oil) Pools. At present Well No. 2 is drilling with a proposed completion in the Drinkard and Blinebry (Oil) Pools. Presently there are two tank batteries on the lease, two 500 barrel tanks for the Blinebry (Oil) Pool, two 210 barrel tanks for the Tubb (Gas) Pool. It is, therefore, desirous to commingle all production from the Drinkard Tubb (Gas) and Blinebry (Oil) Pools allowing two 500 barrel tanks for storage facilities. This also would allow salvage of the two 210 barrel tanks and defer the expense of installing a Drinkard tank battery.

3. The expected daily liquid hydrocarbon production from the Drinkard Pool is 64 barrels of 38° API gravity oil at $2.97 per barrel. That from the Tubb (Gas) Pool is 4 barrels of 68.5° API gravity condensate at $2.79 per barrel. That from the Blinebry (Oil) Pool is 72 barrels of

46° API gravity oil at $2.97 per barrel. The Drinkard and Blinebry (Oil) crudes are considered as intermediate sweet. The combined daily production after commingling is expected to be 140 barrels of 42.8° API gravity crude hydrocarbon at $3.01 per barrel resulting in a $6.32 per day gain in revenue.

4. In accordance with Item II, Section 2-B of the current "Manual for the Installation and Operation of Commingling Facilities", it is proposed to meter prior to commingling all but one zone (Substraction Method). Although the subject royalty interest is common and held in part by the U. S. Federal Government, there is a diversification in royalty payments between the NW/4 of NW/4, Section 31 and the N/2 and SW/4 of NW/4. Section 31, T-22-S, R-38-E (Refer attached plat). Therefore, each of the above described areas must be metered separately to comply with U.S.G.S. requirements. The proposed zone not to be metered is the Tubb (Gas) which is the higher gravity. Positive displacement type meters with samplers and non-reset counters will be installed on the Drinkard and Blinebry (Oil) zones for accurate measurement prior to commingling. A schematic diagram of the proposed commingling installation is attached and is in substantial compliance with Figure 6 in the aforementioned manual.

5. Royalty and working interest in the subject lease is common and royalty interest is held in part by the U. S. Federal Government. Copies of this application are being sent this date to the U. S. Geological Survey, P. O. Box 1838, Hobbs, New Mexico. Upon receipt of approval of this application from U.S.G.S., a copy will be forwarded to New Mexico Oil Conservation Commission.

In view of the facts recited in this application it is respectfully requested that administrative approval of an exception to Rule 303 (a) be granted TEXACO Inc. to permit commingling into a common tank battery the crude hydrocarbon production from the Drinkard Tubb (Gas) Blinebry (Oil) Pools on the A. H. Blinebry (NCT-3) Lease from wells presently completed and from additional wells which may be completed on this lease in these reservoirs in the future.

Yours very truly,

H. N. Wade
Assistant District Superintendent

ODB/om

cc: NMOCC, Hobbs

Attachments

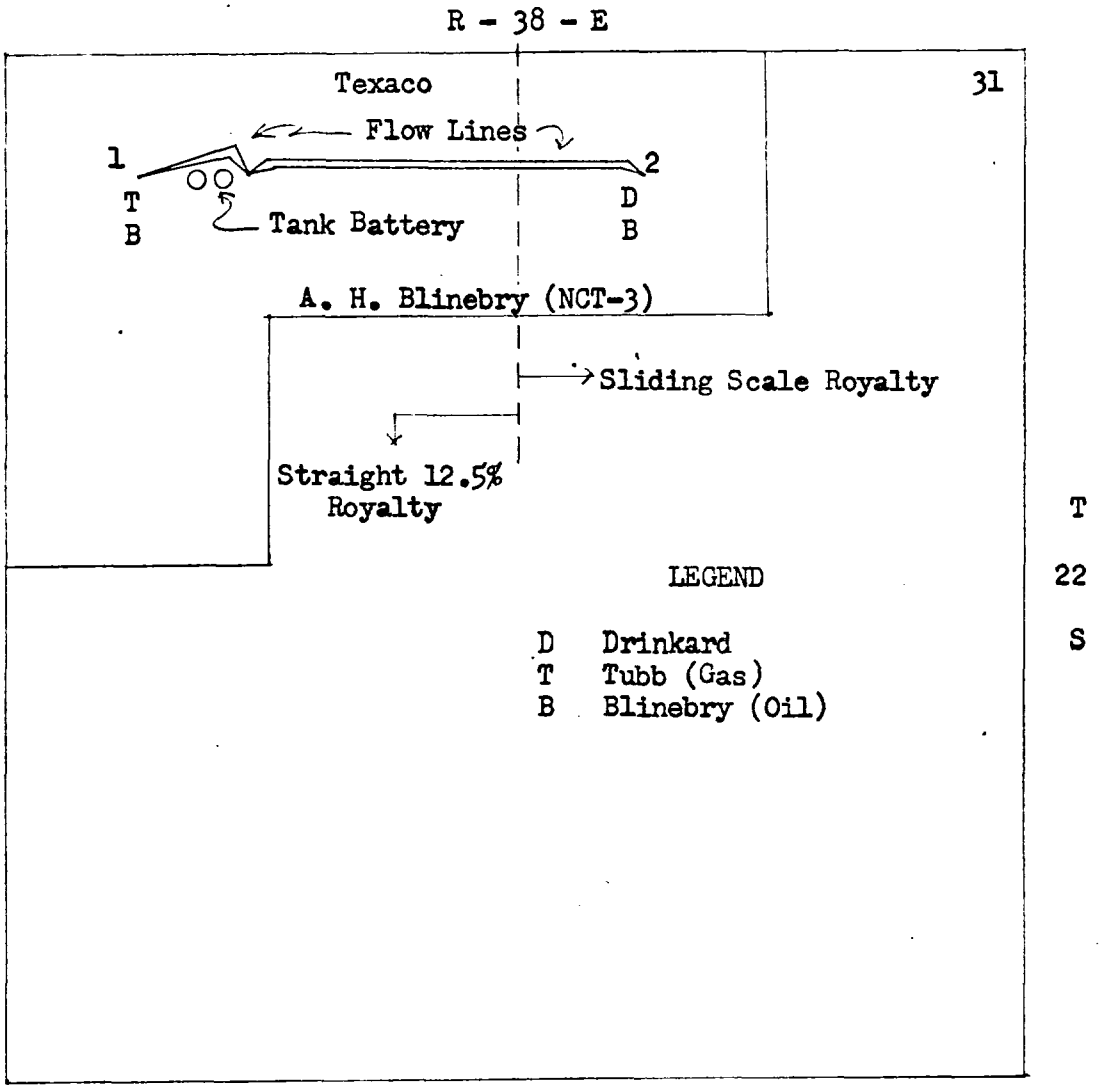

Federal Lease No. LC-032104

PLAT OF TEXACO Inc. A. H. BLINEBRY (NCT-3) LEASE
Lea County, New Mexico
Scale 1 inch = 1000'
ODB 4-9-62

TEXACO
INC.

PETROLEUM PRODUCTS

P. O. Box 728
Hobbs, New Mexico
May 7, 1962

New Mexico Oil Conservation Commission
P. O. Box 871
Santa Fe, New Mexico

Re: Revision of Application dated April 26, 1962, for Permit to Commingle Production, TEXACO Inc., A. H. Blinebry (NCT-3) Lease, Drinkard, Tubb (Gas) and Blinebry (Oil) Pools, Lea County, New Mexico

Attention: Mr. Daniel S. Nutter

Gentlemen:

With reference to your letter of May 1, 1962, attached are revised schematic diagrams providing for metering and sampling of all zones in compliance with Item II, Section 2-A, of the current "Manual for the Installation and Operation of Commingling Facilities".

If any further information is needed please advise.

Yours very truly,

J. G. Blevins, Jr.
Assistant District Superintendent

ODB-MSV

Attachments

SCHEMATIC DIAGRAM OF PROPOSED COMMINGLING INSTALLATION

TEXACO Inc. A. H. Blinebry (NCT-3) Lease
Lea County, New Mexico

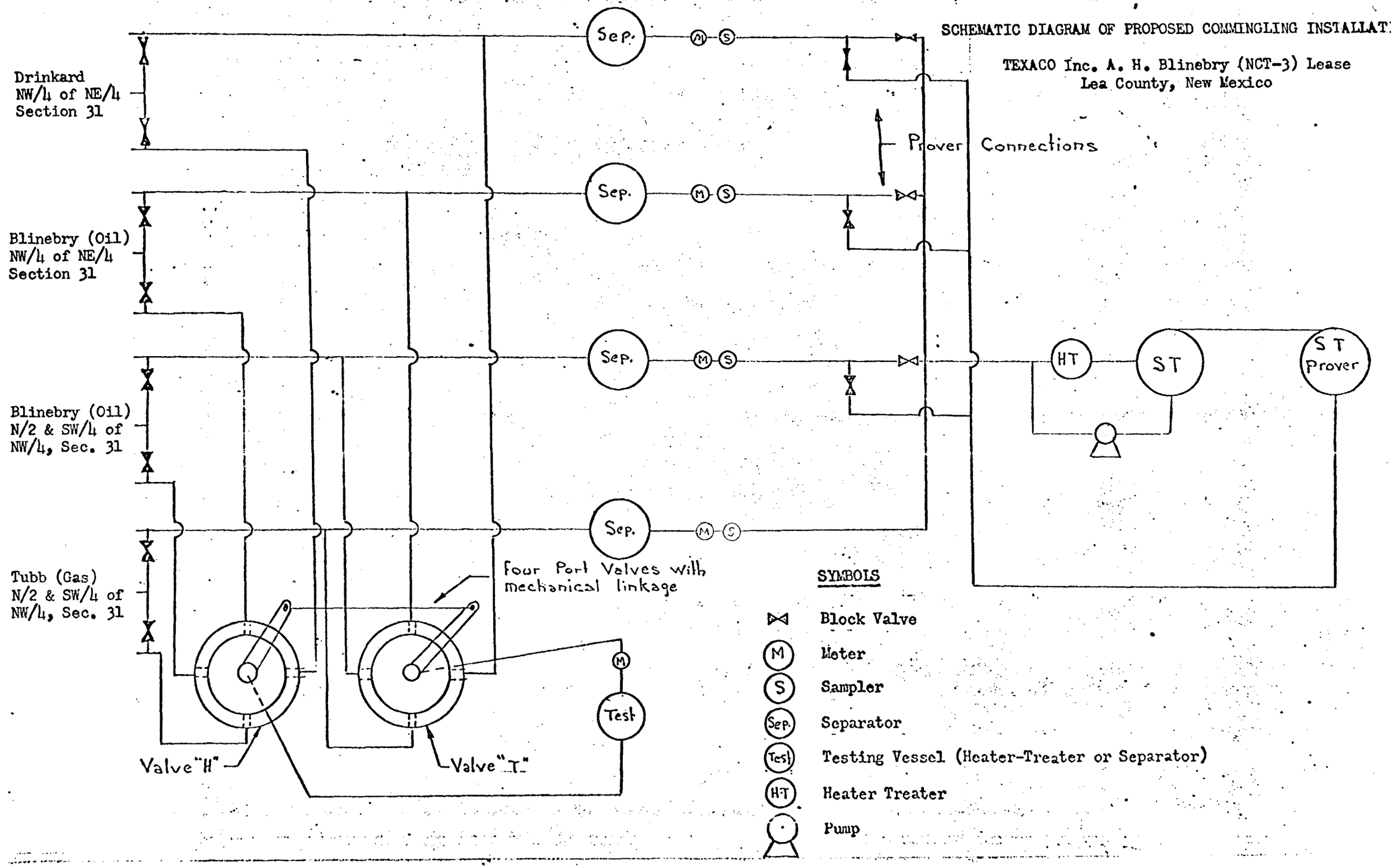

OIL CONSERVATION COMMISSION
P. O. BOX 871
SANTA FE, NEW MEXICO

May 1, 1962

COPY

Texaco Inc.
P. O. Box 728
Hobbs, New Mexico

Attention: Mr. H. N. Wade

Gentlemen:

Reference is made to your letter of April 10, 1962, requesting administrative approval of an exception to Rule 303 to permit commingling Drinkard, Tubb and Blinebry liquid hydrocarbons on your A. H. Blinebry (NCT-3) Lease.

You propose to meter the Blinebry and Drinkard oil and determine the Tubb production by the subtraction method.

Your attention is called to Chapter II, Section 2-B of the Commission's "Manual for the Installation and Operation of Commingling Facilities," which provides that, "Administrative approval of installation utilizing the subtraction method will be granted only if all zones to be so commingled produce hydrocarbons having a gravity of 45° API or less."

Inasmuch as the gravity of the Tubb liquids is 68.5° API and the gravity of the Blinebry oil is 46° API, this installation is not eligible for administrative approval and could be approved only after notice and hearing. Please advise as to your desires regarding this matter.

Very truly yours,

DANIEL S. NUTTER
Chief Engineer

DSN/og

OIL CONSERVATION COMMISSION
P. O. BOX 871
SANTA FE, NEW MEXICO

TEXACO
INC.

PETROLEUM PRODUCTS

1962 APR 13 AM 9 21

Not eligible because of gravity of Tubb and Blinebry
Jonad approve

P. O. Box 728
Hobbs, New Mexico
April 10, 1962

New Mexico Oil Conservation Commission
P. O. Box 871
Santa Fe, New Mexico

Attention: Mr. A. L. Porter, Jr.

Re: Application for Permit to Commingle Production, TEXACO Inc., A. H. Blinebry (NCT-3) Lease, Drinkard-Tubb (Gas) Blinebry (Oil) Pools, Lea County, New Mexico

Gentlemen:

In accordance with New Mexico Oil Conservation Commission Rule 303 (b) TEXACO Inc. hereby makes application for administrative approval of an exception to Rule 303 (a) to permit commingling operations to be conducted on the A. H. Blinebry (NCT-3) Lease, Drinkard, Tubb (Gas), Blinebry (Oil) Pools, Lea County, New Mexico, in support of which is stated the following:

1. TEXACO Inc. is the owner and operator of the A. H. Blinebry (NCT-3) Lease, consisting of 160 acres being the N/2 of the NW/4 and SW/4 of NW/4 and NW/4 of NE/4, Section 31, Township 22 South, Range 38 East, Lea County, New Mexico. Attached is a plat showing the location of all wells on this lease and the pools from which they are producing.

2. The A. H. Blinebry Lease has one producing well consisting of a dual completion in the Tubb (Gas) and Blinebry (Oil) Pools. At present Well No. 2 is drilling with a proposed completion in the Drinkard and Blinebry (Oil) Pools. Presently there are two tank batteries on the lease, two 500 barrel tanks for the Blinebry (Oil) Pool, two 210 barrel tanks for the Tubb (Gas) Pool. It is, therefore, desirous to commingle all production from the Drinkard, Tubb (Gas) and Blinebry (Oil) Pools allowing two 500 barrel tanks for storage facilities. This also would allow salvage of the two 210 barrel tanks and defer the expense of installing a Drinkard tank battery.

3. The expected daily liquid hydrocarbon production from the Drinkard Pool is 64 barrels of 38° API gravity oil at $2.97 per barrel. That from the Tubb (Gas) Pool is 4 barrels of 68.5° API gravity condensate at $2.79 per barrel. That from the Blinebry (Oil)

Pool is 72 barrels of 46° API gravity oil at $2.97 per barrel. The Drinkard and Blinebry (Oil) crudes are considered as intermediate sweet. The combined daily production after commingling is expected to be 140 barrels of 42.8° API gravity crude hydrocarbon at $3.01 per barrel resulting in a $6.32 per day gain in revenue.

4. In accordance with Item II, Section 2-B of the current "Manual for the Installation and Operation of Commingling Facilities", it is proposed to meter prior to commingling all but one zone (Subtraction Method). The proposed zone not be metered is the Tubb (Gas) which is the higher gravity. Positive displacement type meters with samplers and non-reset counters will be installed on the Drinkard and Blinebry (Oil) zones for accurate measurement prior to commingling. A schematic diagram of the proposed commingling installation is attached and is in substantial compliance with the Figure 6 in the aforementioned manual.

5. Royalty and working interest in the subject lease is common and royalty interest is held in part by the U.S.G.S.. Copies of this application are being sent this date to the U.S. Geological Survey, P. O. Box 1838, Hobbs, New Mexico. Upon receipt of approval of this application from U.S.G.S., a copy will be forwarded to New Mexico Oil Conservation Commission.

In view of the facts recited in this application it is respectfully requested that administrative approval of an exception to Rule 303 (a) be granted TEXACO Inc. to permit commingling into a common tank battery the crude hydrocarbon production from the Drinkard, Tubb (Gas), Blinebry (Oil) Pools on the A. H. Blinebry (NCT-3) Lease from wells presently completed and from additional wells which may be completed on this lease in these reservoirs in the future.

Yours very truly,

H. N. Wade
Assistant District Superintendent

ODB-MSV

cc: NMOCC, Hobbs

Attachments

R - 38 - E

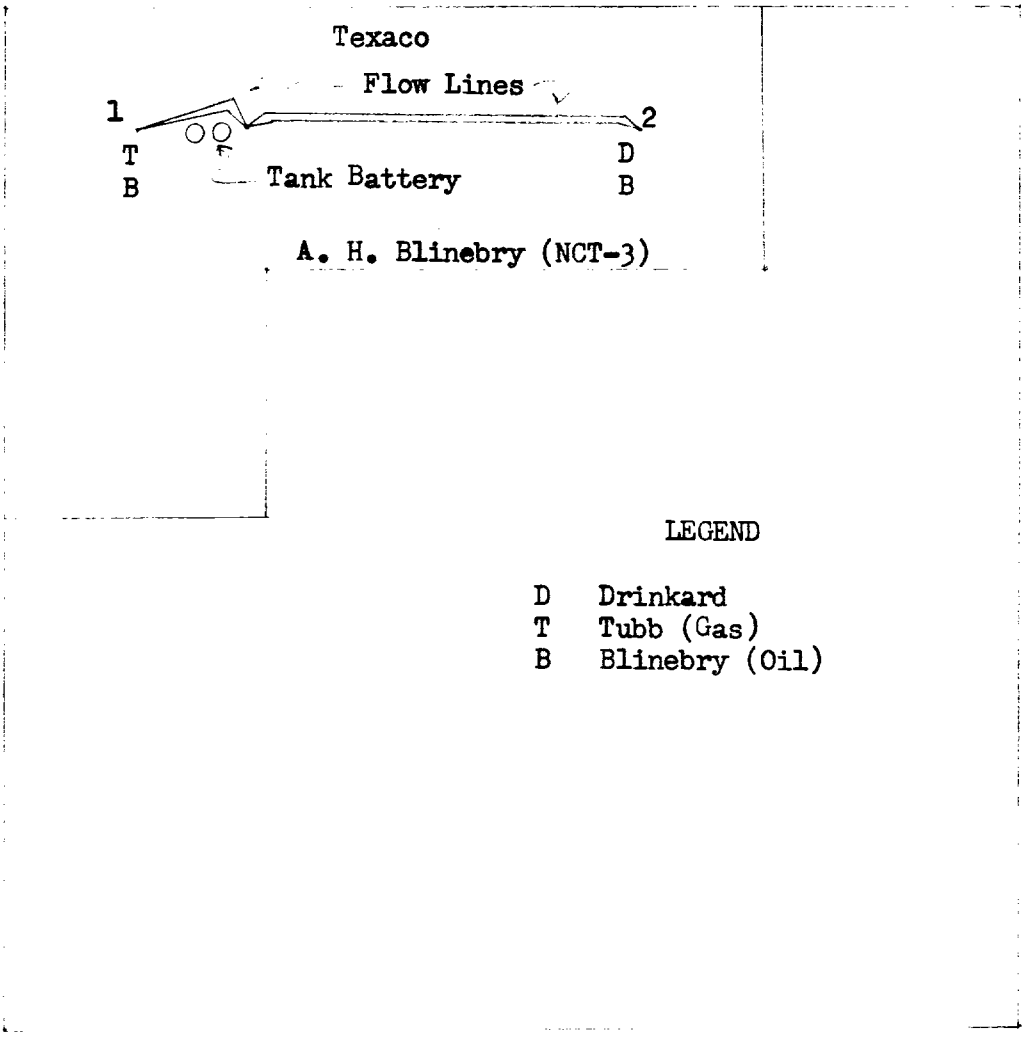

Federal Lease No. LC-032104

PLAT OF TEXACO Inc. A. H. BLINEBRY (NCT-3) LEASE
Lea County, New Mexico
Scale 1 inch = 1000'
ODB 4-9-62

SCHEMATIC DIAGRAM OF PROPOSED COMMINGLING INSTALLATION
TEXACO Inc. A. H. Blinebry (NCT-3) Lease
Lea County, New Mexico

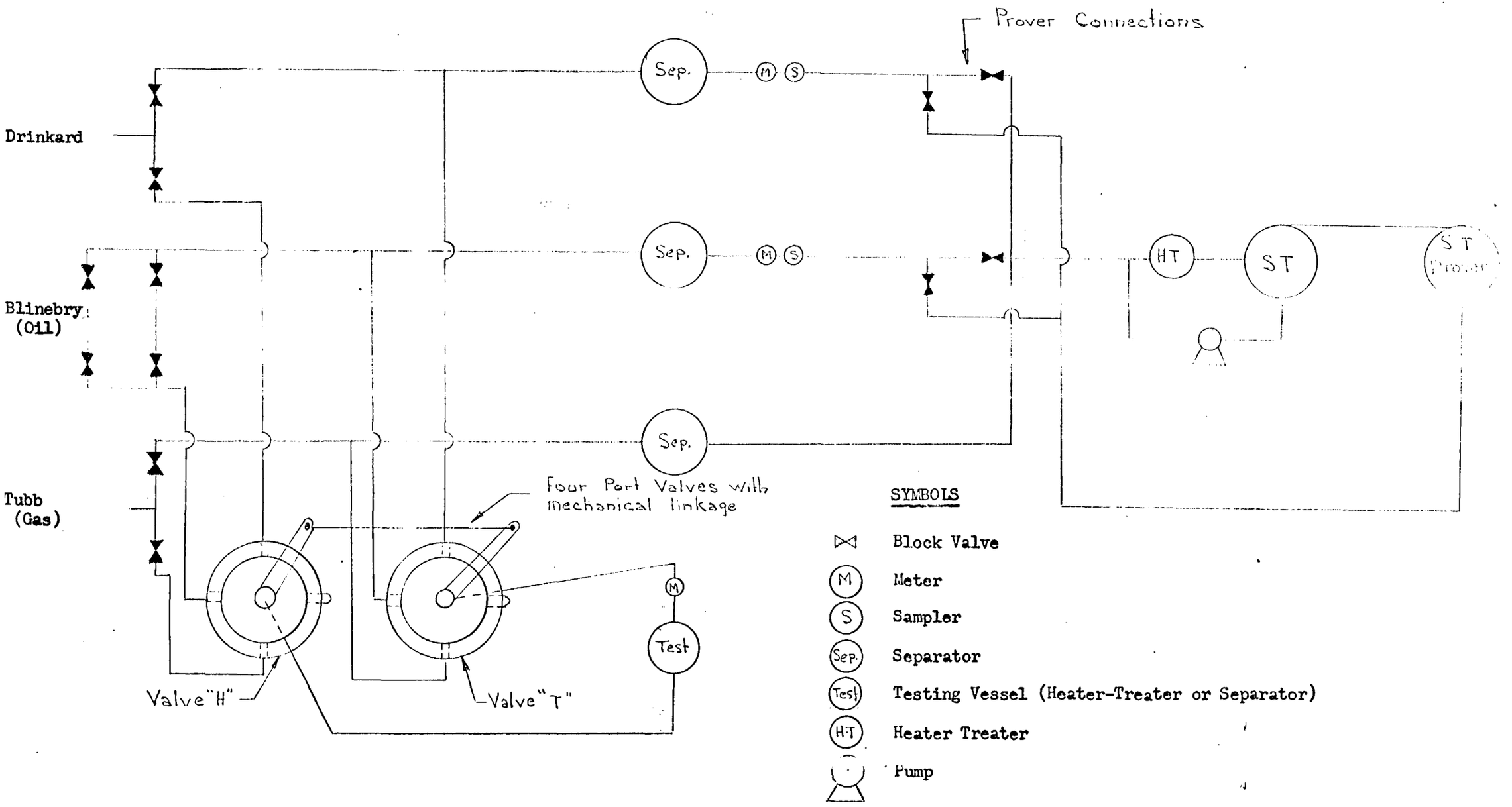

TEXACO
INC.

PETROLEUM PRODUCTS

P. O. Box 728
Hobbs, New Mexico
May 21, 1962

New Mexico Oil Conservation Commission
P. O. Box 871
Santa Fe, New Mexico

Revision of Application dated April 26, 1962, for Permit to Commingle Production, TEXACO Inc., A. H. Blinebry (NCT-3) Lease, Drinkard, Tubb (Gas) and Blinebry (Oil) Pools, Lea County, New Mexico

Attention: Mr. Daniel S. Nutter

Gentlemen:

Attached are copies of a letter from U.S.G.S., dated May 17, 1962, approving the method of production commingling requested by TEXACO Inc. from the subject reservoirs on the subject lease.

Your early attention to processing our commingling application dated April 26, 1962, and revised May 7, 1962, will be appreciated.

Yours very truly,

J. G. Blevins, Jr.
Assistant District Superintendent

WPY-MSV

Attachments

IN REPLY REFER TO:

UNITED STATES
DEPARTMENT OF THE INTERIOR
GEOLOGICAL SURVEY
Drawer 1857
Roswell, New Mexico

May 17, 1962

Texaco Inc.
P. O. Box 728
Hobbs, New Mexico

Attention: Mr. H. N. Wade

Gentlemen:

Your letter of April 26, 1962, requests approval to commingle oil production from the Blinebry, Drinkard and Tubb Pools in the N½NW¼ and SW¼NW¼ and NW¼NE¼ sec. 31, T. 22 S., R. 38 E., Lea County, New Mexico, on Federal lease Las Cruces 032104.

The method of commingling described by the diagrams attached to your letter is hereby approved. You are requested to notify our Hobbs office when the installation is completed so that a field inspection of the system can be made.

Form 9-361, Lessees Monthly Report of Sales and Royalty, for the subject lease should show all meter readings and computations used in determining the royalty for each portion of the lease.

Very truly yours,

JOHN A. ANDERSON
Regional Oil and Gas Supervisor