OIL CONSERVATION COMMISSION
P. O. BOX 871
SANTA FE, NEW MEXICO

March 19, 1963

COPY

Continental Oil Company
P. O. Box 1377
Roswell, New Mexico

Attention: Mr. A. B. Slaybaugh

Administrative Order PC-133

Gentlemen:

Reference is made to your application dated March 11, 1963, for administrative approval of an exception to Rule 303 (a) of the Commission Rules and Regulations to permit the commingling of the production from the Drinkard and Blinebry Oil Pools on your Hawk "A" Lease comprising the W/2 SW/4 of Section 4, the SE/4 of Section 5, the N/2 NW/4 and NE/4 of Section 8, and the W/2 NW/4 of Section 9, all in Township 21 South, Range 37 East, Lea County, New Mexico, after separately metering the Drinkard production and allocating the Blinebry production by means of the subtraction method.

By the authority vested in me under the provisions of Rule 303 (b) of the Commission Rules and Regulations, you are hereby authorized to commingle the production from the aforesaid pools on said lease in the above-described manner. Provided however, that the installation shall be operated in accordance with the provisions of the Commission "Manual for the Installation and Operation of Commingling Facilities," including the requirement for non-reset counters on the meters.

Very truly yours,

A. L. PORTER, Jr.,
Secretary-Director

ALP/DSN/esr

cc: Oil Conservation Commission - (with enclosure) - Hobbs
Oil & Gas Engineering Committee - Hobbs
United States Geological Survey - Roswell

OIL CONSERVATION COMMISSION
P. O. BOX 871
SANTA FE, NEW MEXICO

CONOCO

CONTINENTAL OIL COMPANY

P. O. BOX 1377
ROSWELL, NEW MEXICO

PRODUCTION DEPARTMENT
NEW MEXICO DIVISION
WM. A. MEAD
DIVISION SUPERINTENDENT
A. B. SLAYBAUGH
ASSISTANT DIVISION SUPERINTENDENT

825 PETROLEUM BUILDING
TELEPHONE: MAIN 2-4202

March 11, 1963

AC-133

New Mexico Oil Conservation Commission
Post Office Box 871
Santa Fe, New Mexico

Attention: Mr. A. L. Porter, Jr., Secretary-Director

Re: Application for Permission
to Commingle Hawk "A" Lease

Gentlemen:

We forward herewith application in triplicate for permission to commingle Drinkard and Blinebry fluids on the captioned lease. You will note that there are also two Eumont oil wells on this lease. This Eumont crude is sour and the wells are remote. Therefore, we do not propose to commingle it with the Drinkard and Blinebry.

Your approval of the application will be sincerely appreciated.

Yours very truly,

VTL-pr
Enc.
cc: RGP GW JWK JRP

Roswell, New Mexico

March 11, 1963

MAIN OFFICE OCC
1963 MAR 14 PM 1 20

New Mexico Oil Conservation Commission
Post Office Box 871
Santa Fe, New Mexico

Attention: Mr. A. L. Porter, Jr., Secretary-Director

Subject: Application of Continental Oil Company for exception to Rule 303 (A) in order to Commingle the Oil Production from the Drinkard and Blinebry Oil Pools on its Hawk "A" Lease, located in Sections 4, 5, 8 and 9, T-21S, R-37E, NMPM, Lea County, New Mexico.

Gentlemen:

Continental Oil Company requests an exception to Rule 303 (A) for permission to commingle liquids produced from the captioned lease and in support thereof submits the following information:

1. Applicant's Hawk "A" Lease consists of the W/2 SW/4 of Section 4, the SE/4 of Section 5, the N/2 NW/4 and the NE/4 of Section 8, and the W/2 NW/4 of Section 9, T-21S, R-37E, NMPM, Lea County, New Mexico. A plat, Exhibit No. 1, attached hereto, shows the lease, the wells thereon and the battery site.

2. The mineral rights under the Hawk "A" Lease are held by the Federal Government.

3. Production from the Drinkard formation will be measured by suitable meter and sampler so long as top allowable production exists on the lease. The Blinebry production will be determined by the subtraction method as long as production is below top allowable. A tabulation, Exhibit No. 2, attached hereto, shows the latest test on the presently producing wells and the average daily production by pools during the period from December 1, 1962 to February 1, 1962.

4. The anticipated gravity of the commingled production has been calculated to be approximately 38.2° API with a value of $2.89 per barrel. The actual commercial value of the commingled production for the lease will be approximately the same as it is at the present time.

5. One test facility (separator, meter and sampler) will be utilized for all wells on the lease in this system and will provide accurate measurement of the performance of each individual well. A schematic diagram, Exhibit No. 3, attached hereto, shows the proposed installation. As shown, the facility conforms to the requirements of the "Manual for the Installation and Operation of Commingling Facilities" dated 9-13-61.

6. Exhibit No. 4 is a copy of a letter indicating approval of the commingling facility by the Oil & Gas Supervisor of the United States Geological Survey.

7. Commingling of production will result in the prevention of waste and will not impair correlative rights.

In view of the facts stated above, it is respectfully requested that an exception to Rule 303 (A) be granted permitting the commingling of production from the several reservoirs on Applicant's Hawk "A" Lease as described above.

CONTINENTAL OIL COMPANY

By A. B. Slaybaugh
A. B. Slaybaugh
Asst. Division Superintendent
of Production

copies to:

NMOCC (3)
RGP
HGD
JWK
JRP
File

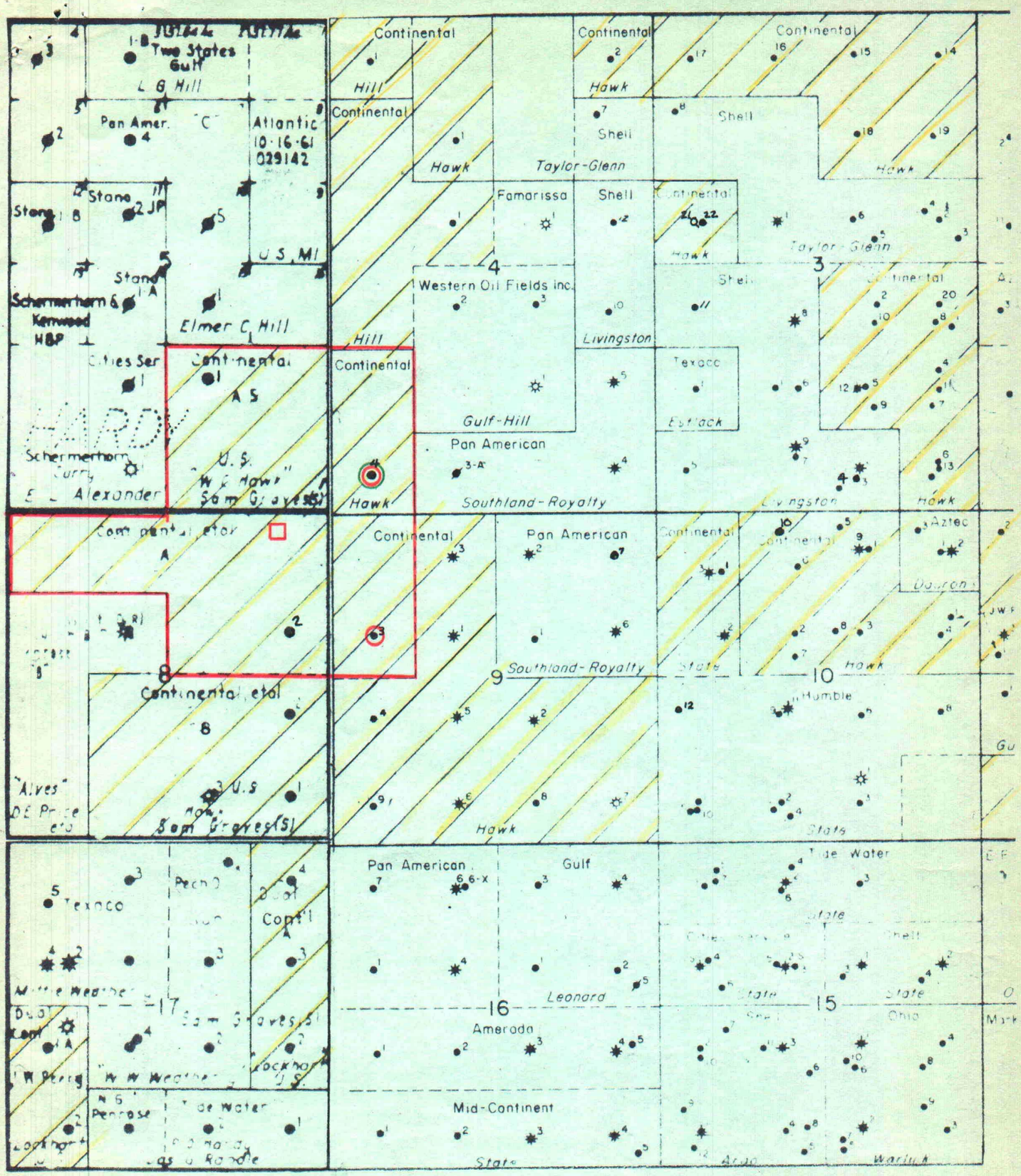

Hawk "A" Lease
Tank Battery Location

Drinkard Oil Pool
Tubb Oil Pool
Blinebry Oil Pool

EXHIBIT NO. 1

CONTINENTAL OIL COMPANY
PRODUCTION DEPARTMENT EUNICE, NEW MEXICO

LOCATION PLAT

Date: 8-30-62	Scale: 1" = 2,000'
	Drawn BY: G.A.S.

Pool	Well No.	Daily Avg. Prod. from 12-1-62 to 2-1-63	Gravity	Latest Well Test			
				Date	Oil B/D	Water B/D	Gas MCF/D
Drinkard	3	2.2	38.2	12-6-62	8	0	3.8
"	4	16.1*	38.2	2-16-63	71	6	24
Blinebry	4	No allowable	38.3	12-9-62	27	15	6

POOL TOTALS

Pool	Est. Daily Prod.	Gravity	Value
Drinkard	65	38.2	$2.89
Blinebry	25	38.3	$2.89

*Well loads up and dies. Pumping unit to be installed in near future.

Exhibit

CONTINENTAL OIL COMPANY
Hawk "A" Lease

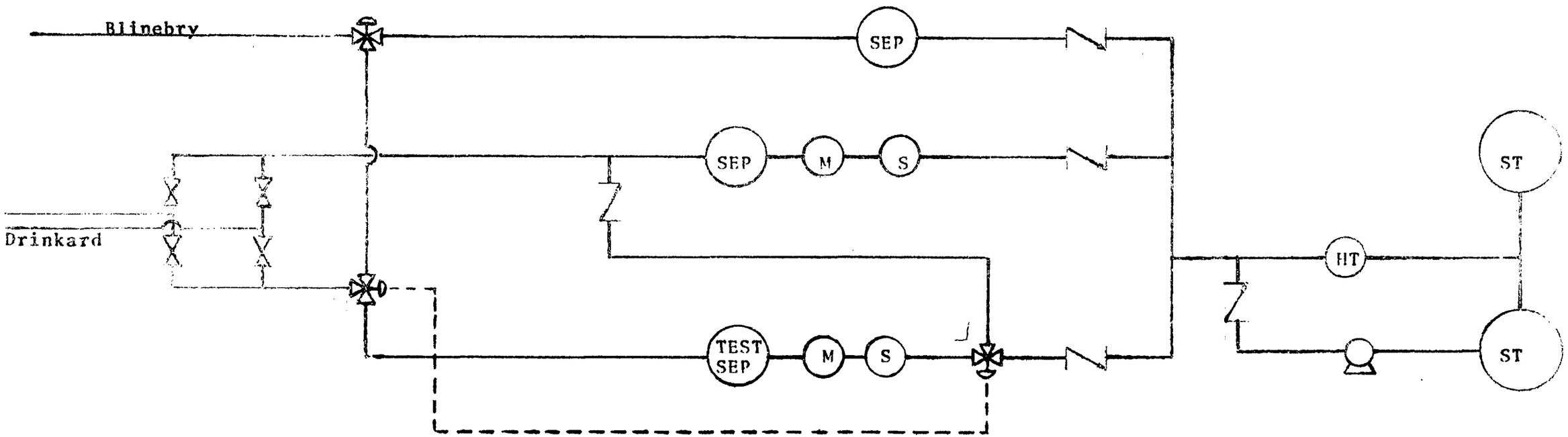

(M) Meter to be used when top allowable production exists

(S) Sampler to be used in conjunction with meter

Exhibit No. 3

IN REPLY REFER TO

UNITED STATES
DEPARTMENT OF THE INTERIOR
GEOLOGICAL SURVEY
Drawer 1857
Roswell, New Mexico

March 5, 1963

Copy to Bureau
S. O. G.
Data

Continental Oil Company
P. O. Box 1377
Roswell, New Mexico

Attention: Mr. William A. Mead

Gentlemen:

Your letter of February 22, 1963, requests approval to commingle oil production from the Blinebry and Drinkard pools on Federal lease Las Cruces 031741(a).

The method of commingling Blinebry and Drinkard production described by the diagrams attached to your letter is hereby approved for that portion of lease Las Cruces 031741(a) [illegible] subject to a 12½ percent royalty rate described as the [illegible] sec. 4, N½NW¼ and NE¼ sec. 8, and W½NW¼ sec. 9, T. 21 S., R. [illegible], Lea County, New Mexico. Additional commingling facilities on the remaining portion of this lease or the addition of more zones to the now approved installation will require approval by this office.

You are requested to notify our Hobbs office when the installation is completed so that a field inspection of the system can be made.

Very truly yours,

CARL C. TRAWICK
Acting Oil and Gas Supervisor

RECEIVED
NEW MEXICO

ILLEGIBLE