1961

CO_2, INC.
Gonzales #2
sec 9, 21N, 30E
400'FS, 675'FE

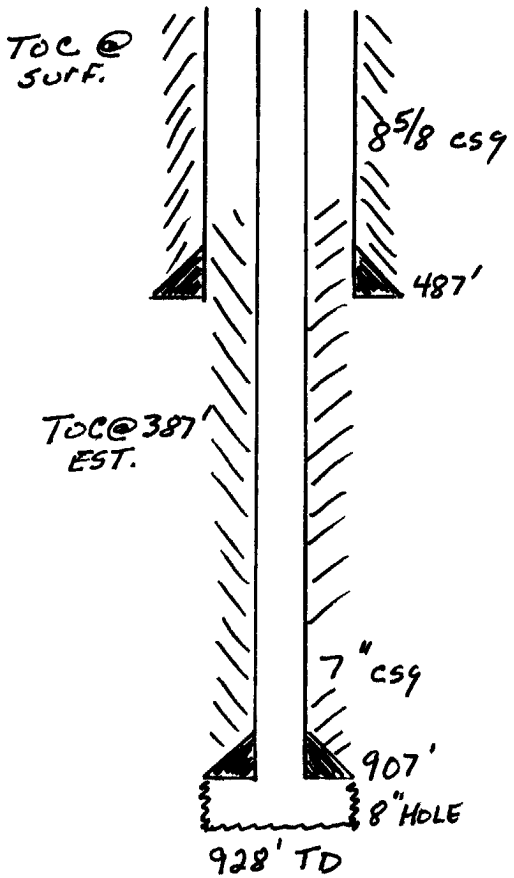

1937

CO_2, INC
Gallagher #1
sec. 9, 21N, 30E
660FS, 198FW

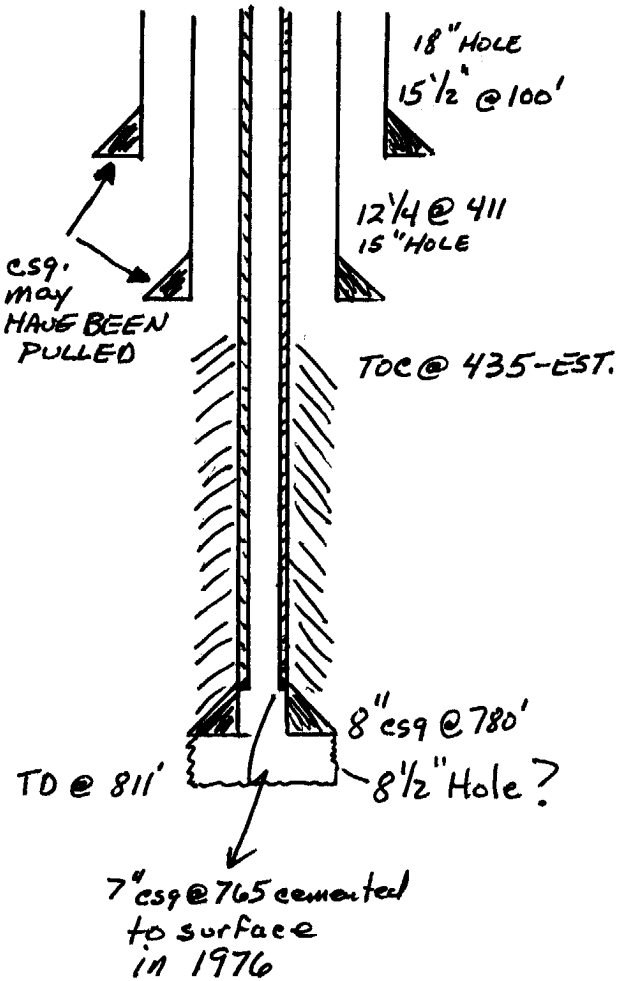

1950
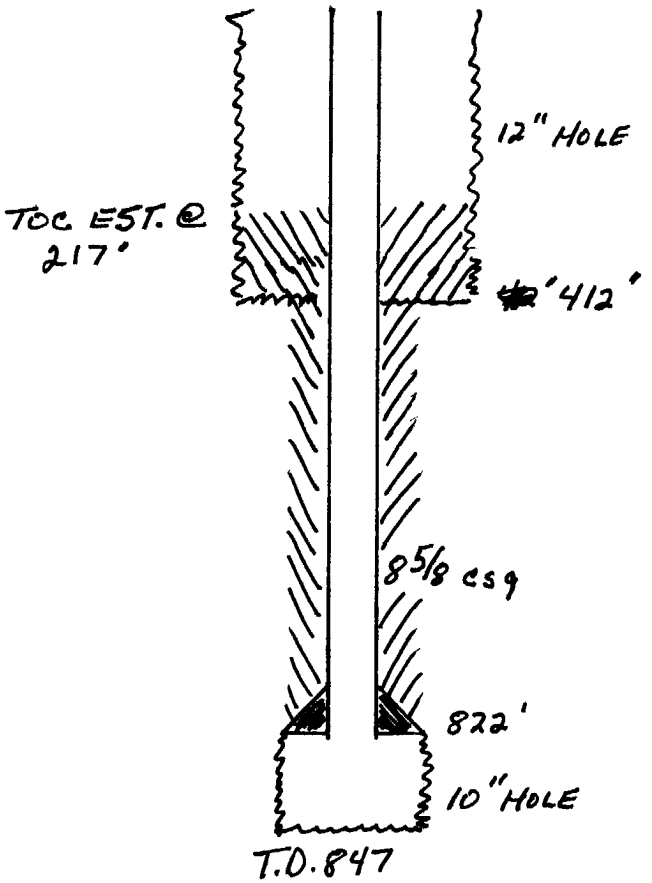
CO_2, INC
MINERALS #1
sec. 16, 21N, 30E
960'FN, 1930FE