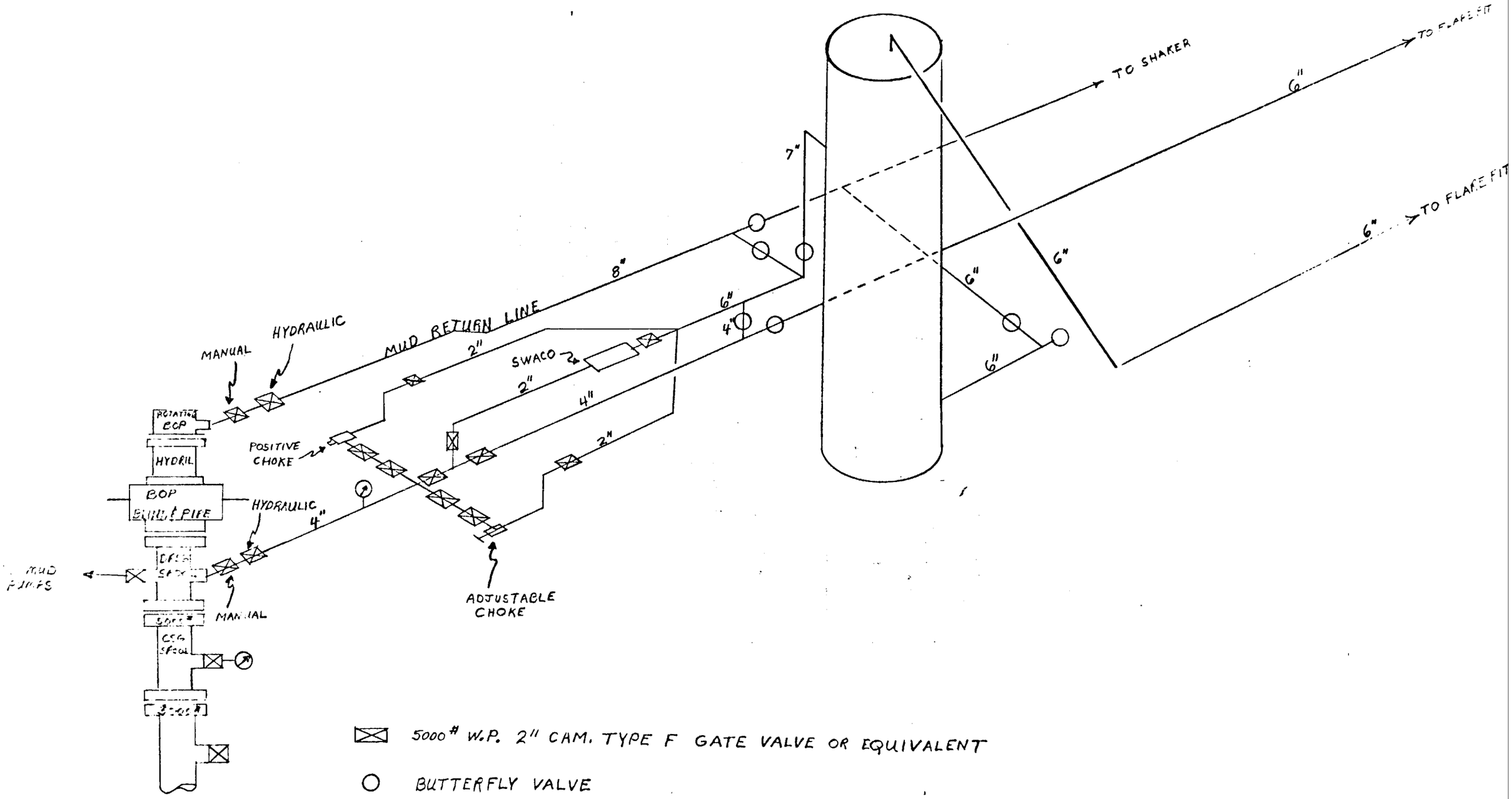CITIES SERVICE OIL COMPANY #1 GOVERNMENT W
SEC. 22-T20S-R28E, EDDY COUNTY, NEW MEXICO