District I
1625 N. French Dr., Hobbs, NM 88240
District II
1301 W. Grand Avenue, Artesia, NM 88210
District III
1000 Rio Brazos Road, Aztec, NM 87410
District IV
1220 S. St. Francis Dr., Santa Fe, NM 87505

State of New Mexico
Energy Minerals and Natural Resources

Oil Conservation Division
1220 South St. Francis Dr.
Santa Fe, NM 87505

Risk Bedrock defined plume

Submit 1 copy to appropriate District Office and 1 copy to the Santa Fe Office

(Revised 3/9/94)

PIT REMEDIATION AND CLOSURE REPORT

API# 30-039-05991

DEC 2002 RECEIVED OIL CONS. DIV. DIST. 3

Operator: Devon Energy Telephone: _____

Address: _____

Facility Or: Nordhaus WN Federal #1 Well, Meter 74491
Well Name

Location: Unit or Qtr/Qtr Sec N Sec 18 T 25 R 7 County Rio Arriba

Pit Type: Separator _____ Dehydrator _____ Other Drip

Land Type: BLM X, State _____, Fee _____ Other _____

Pit Location: Pit dimensions: length 21', width 23', depth 3'
(Attach diagram)

Reference: wellhead X, other _____

Footage from reference: 54'

Direction from reference: 331 Degrees X East North _____
of
_____ West South _____

Depth To Ground Water (Vertical distance from contaminants to seasonal high water elevation of ground water.)	Less than 50 feet	(20 points)	
	50 feet to 99 feet	(10 points)	
	Greater than 100 feet	(0 points)	20
Wellhead Protection Area: (Less than 200 feet from a private domestic water source, or; less than 1000 feet from all other water sources.)	Yes	(20 points)	
	No	(0 points)	0
Distance To Surface Water: (Horizontal distance to perennial lakes, ponds, rivers, streams, creeks, irrigation canals and ditches.)	Less than 200 feet	(20 points)	
	200 feet to 1000 feet	(10 points)	
	Greater than 1000 feet	(0 points)	0

RANKING SCORE (TOTAL POINTS): 20

Date Remediation Started: 09/21/94 Date completed: 09/21/94

Remediation Method: (Check all appropriate sections.)
Excavation _____ Approx. cubic yards _____
Landfarmed _____ Insitu Bioremediation _____
Other Backfill Pit Without Excavation

Remediation Location: (i.e. landfarmed onsite, name and location of offsite facility)
Onsite N/A Offsite N/A

General Description of Remedial Action: 8' hit rock; 10 yds. fill

Ground Water Encountered: No X Yes _____ Depth _____

Final Pit: Closure Sampling: (if multiple samples, attach sample results and diagram of sample locations and depths)

Sample location Four walls and center of pit composite

Sample depth 8'

Sample Date 09/21/94 Sample time 15:00

Sample Results

Benzene(ppm) Not reported

Total BTEX(ppm) Not reported

Field headspace(ppm) Not reported

TPH 2370

Ground Water Sample: Yes _____ No X (If yes, attach sample results)

I hereby certify that the information above is true and complete to the best of my knowledge and belief.

Date 1/8/03

Signature Scott T. Pope

Printed Name and Title Scott T. Pope Senior Env. Scientist

elpaso

PIT CLOSURE REQUEST

Nordhaus WN Federal Well
Meter/Line ID 74491

OCT 2002

SITE DETAILS

Legals - Twn: 25N **Rng: 7** **Sec: 18** **Unit: N**
NMOCD Hazard Ranking: 20 **Land Type: BLM**
Operator: Devon Energy **Pit Closure Date: 09/21/94**

RATIONALE FOR RISK-BASED CLOSURE

The pit noted above was assessed and ranked according to the criteria in the New Mexico Oil Conservation Division's (NMOCD) Unlined Surface Impoundment Closure Guidelines.

A test pit was excavated to 8 feet (ft) below ground surface (bgs) where bedrock was encountered, and a soil sample was collected for field headspace analysis and laboratory analysis for TPH. Groundwater was not encountered in the test pit. Headspace analysis indicated an organic vapor content of 214 ppm; laboratory analysis indicated a TPH concentration of 2,370 mg/kg. The TPH concentration exceeded its recommended remediation level for the Hazard Ranking Score of 20.

No soil was disposed of offsite. The pit was backfilled with 10 cubic yards of clean fill on September 21, 1994 and graded in a manner to direct surface runoff away from the pit area.

A Phase II boring was completed on August 24, 1998 with refusal at 21 ft bgs. No groundwater was encountered in the soil boring. One laboratory sample was collected at 20-21 ft bgs. Headspace analysis indicated an organic vapor content of 174 ppm; laboratory analysis indicated a benzene concentration of <0.5 mg/kg, a total BTEX concentration of <3 mg/kg, and a TPH concentration of <20 mg/kg. The benzene, BTEX, and TPH concentrations were below recommended remediation levels for the Hazard Ranking Score.

No Phase III activities were conducted.

El Paso Field Services requests closure of the above mentioned production pit location for the following reasons:

- The primary source, discharge to the pit, has been removed for over eight years.
- The test pit was backfilled and the former pit area graded to direct surface runoff away from the former pit.
- The clean soil placed on top of the excavation would limit the potential for direct contact with hazardous constituents by livestock or the public; i.e., current direct contact exposure pathways are unlikely to be completed.
- Groundwater was not encountered in the soil boring at 21 ft bgs.
- There are no water supply wells or other sources of fresh water extraction within 1,000 feet of the site.

- Benzene, total BTEX, and TPH concentrations in the soil sample collected at the base of the Phase 2 soil boring at 21 ft bgs were non-detect, indicating that no significant downward constituent migration is occurring.
- Residual hydrocarbons, if any, in the soil will degrade by natural attenuation with minimal risk to the environment.
- Bedrock at 8 ft bgs makes further excavation impractical.

ATTACHMENTS

Field Pit Assessment Form
Revised Field Pit Assessment Form
Field Pit Remediation/Closure Form
Phase 2 Soil Boring Log
Laboratory Analytical Results

FIELD PIT SITE ASSESSMENT FORM

GENERAL

Meter: 74-491 Location: Nordhaus WN Federal Well
Operator #: 1790 Operator Name: Devon Energy P/L District: Ballard
Coordinates: Letter: N Section 18 Township: 25 Range: 7
Or Latitude _____ Longitude _____
Pit Type: Dehydrator ___ Location Drip: X Line Drip: ___ Other: _____
Site Assessment Date: 06/30/94 Area: 07 Run: 41

SITE ASSESSMENT

NMOCD Zone:
(From NMOCD Maps)

Inside	☐	(1)
Outside	☒	(2)

Land Type:

BLM	☒	(1)
State	☐	(2)
Fee	☐	(3)
Indian		

Depth to Groundwater

Less Than 50 Feet (20 points)	☒	(1)
50 Ft to 99 Ft (10 points)	☐	(2)
Greater Than 100 Ft (0 points)	☐	(3)

Wellhead Protection Area :
Is it less than 1000 ft from wells, springs, or other sources of fresh water extraction? , or ; Is it less than 200 ft from a private domestic water source? ☐ (1) YES (20 points) ☒ (2) NO (0 points)

Horizontal Distance to Surface Water Body

Less Than 200 Ft (20 points)	☐	(1)
200 Ft to 1000 Ft (10 points)	☒	(2)
Greater Than 1000 Ft (0 points)	☐	(3)

Name of Surface Water Body ~~30~~ Pallache Canyon
(Surface Water Body : Perennial Rivers,Major Wash,Streams,Creeks, Irrigation Canals,Ditches,Lakes,Ponds)
Distance to Nearest Ephemeral Stream ☐ (1) < 100'(Navajo Pits Only)
☐ (2) > 100'

TOTAL HAZARD RANKING SCORE: 30 POINTS

REMARKS

Remarks : Redline Book - Inside Vulnerable Zone Tape - Outside
One pit, pit is dry, will close one pit

ORIGINAL PIT LOCATION

ORIGINAL PIT LOCATION

Original Pit : a) Degrees from North 331° Footage from Wellhead 54'

b) Length : 21' Width : 23' Depth : 3'

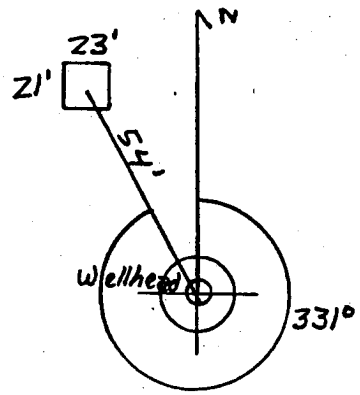

REMARKS

Remarks :

Pictures @ 1316 (5-8)

End Dump

Operator name on meter chart is different from the name on the sign. Name from the chart is used here.

Completed By:

Sarah Kelly
Signature

7/1/94
Date

REVISED
FIELD PIT SITE ASSESSMENT FORM

GENERAL

Meter: 74491 Location: Nordhaus WN Federal Well 1
Operator #: _____ Operator Name: _____ P/L District: _____
Coordinates: Letter: N Section 18 Township: 25 Range: 7
Or Latitude _____ Longitude _____
Pit Type: Dehydrator _____ Location Drip: _____ Line Drip: _____ Other: _____
Site Assessment Date: 4/14/98 Area: _____ Run: _____

SITE ASSESSMENT

NMOCD Zone:
(From NMOCD Maps)

Inside	☐	(1)
Outside	☒	(2)

Land Type:

BLM	☒	(1)
State	☐	(2)
Fee	☐	(3)
Indian	_____	

Depth to Groundwater

Less Than 50 Feet (20 points)	☒	(1)
50 Ft to 99 Ft (10 points)	☐	(2)
Greater Than 100 Ft (0 points)	☐	(3)

Wellhead Protection Area

Is it less than 1000 ft from wells, springs or other sources of fresh water extraction?, or; Is it less than 200 ft from a private domestic water source?

☐ (1) YES (20 points) ☒ (2) NO (0 points)

Horizontal Distance to Surface Water Body

Less Than 200 Ft (20 points)	☐	(1)
200 Ft to 1000 Ft (10 points)	☐	(2)
Greater Than 1000 Ft (0 points)	☒	(3)

Name of Surface Water Body _____

(Surface Water Body: Perennial Rivers, Streams, Creeks, Irrigation Canals, Ditches, Lakes, Ponds)

Distance to Nearest Ephemeral Stream ☐ (1) < 100' (Navajo Pits Only)
☐ (2) > 100'

TOTAL HAZARD RANKING SCORE: 20 POINTS

REMARKS

Remarks : Site has been re-assessed, due to initial assessment including washes as a Surface Water Body. Site is < 50' vertical from center of Pallache Canyon

(assess) 12/16/97

El Paso Natural Gas Company

FIELD SERVICES LABORATORY
ANALYTICAL REPORT
PIT CLOSURE PROJECT - Soil Samples Outside the GWV Zone

SAMPLE IDENTIFICATION

	Field ID	Lab ID
SAMPLE NUMBER:	VW 320	946189
MTR CODE | SITE NAME:	74491	N/A
SAMPLE DATE | TIME (Hrs):	9-21-94	1500
SAMPLED BY:	N/A	
DATE OF TPH EXT. | ANAL.:	9-22-94	9-22-94
DATE OF BTEX EXT. | ANAL.:	N/A	N/A
TYPE | DESCRIPTION:	VG	Dark brown sand & clay

REMARKS:

RESULTS

PARAMETER	RESULT	UNITS	QUALIFIERS			
			DF	Q	M(g)	V(ml)
TPH (418.1)	2370	MG/KG			2.08	28
HEADSPACE PID	214	PPM				
PERCENT SOLIDS	91.1	%				

-- TPH is by EPA Method 418.1 --

Narrative:

DF = Dilution Factor Used

Approved By: [signature]

Date: 9/30/94

FIELD PIT REMEDIATION/CLOSURE FORM

GENERAL

Meter: 74491 Location: Nordhaus WN Federal Well #1

Coordinates: Letter: N Section 18 Township: 25 Range: 7

Or Latitude _____ Longitude _____

Date Started : 9-21-94 Run: 02 41

FIELD OBSERVATIONS

Sample Number(s): VW320 _____ _____ _____

Sample Depth: ~~12'~~ VW 8' 9-21-94 Feet

Final PID Reading 214 PID Reading Depth ~~12'~~ VW 8' 9-21-94 Feet

	Yes	No
Groundwater Encountered	☐	☒

Approximate Depth _____ Feet

CLOSURE

Remediation Method :

- Excavation ☐ Approx. Cubic Yards _____
- Onsite Bioremediation ☐
- Backfill Pit Without Excavation ☒

Soil Disposition:

- Envirotech ☐ ☐ Tierra
- Other Facility ☐ Name: _____

Pit Closure Date: 9-21-94 Pit Closed By: REI

REMARKS

Remarks : 8' hit rock 10 yds Fill

Signature of Specialist: Vale Wilson

(SP3191) 03/16/94

El Paso Natural Gas Company

CHAIN OF CUSTODY RECORD

Page _____ of _____

ECT NUMBER

PROJECT NAME: Pit Closure Project # 24324

LERS: (Signature): Vale Wilson

DATE: 9-21-94

CONTRACT LABORATORY P. O. NUMBER

ID	DATE	TIME	MATRIX	SAMPLE NUMBER	TOTAL NUMBER OF CONTAINERS	SAMPLE TYPE	TPH EPA 418.1	BTEX EPA 8020				Seq #	REMARKS
82	9-21-94	1020	Soil	VW 313	1	VG	X					281	
83	9-21-94	1020	Soil	VW 314	1	D	X						
84	9-21-94	1023	Soil	VW 315	1	B	X						
85	9-21-94	1100	Soil	VW 316	1	VG	X					282	
86	9-21-94	1145	Soil	VW 317	1	VG	X					283	
87	9-21-94	1235	Soil	VW 318	1	VG	X					284	
88	9-21-94	1315	Soil	VW 319	1	VG	X					285	
89	9-21-94	1500	Soil	VW 320	1	VG	X					286	
90	9-21-94	1530	Soil	VW 321	1	VG	X					287	

RELINQUISHED BY: (Signature)	DATE/TIME	RECEIVED BY: (Signature)	RELINQUISHED BY: (Signature)	DATE/TIME	RECEIVED BY: (Signature)
Vale Wilson	9-21-94 1830	Brenda Liess	Brenda Liess	9/22/94 1045	KDK 9/22/94
RELINQUISHED BY: (Signature)	DATE/TIME	RECEIVED BY: (Signature)	RELINQUISHED BY: (Signature)	DATE/TIME	RECEIVED OF LABORATORY BY: (Signature)

EQUESTED TURNAROUND TIME:

ROUTINE ☐ RUSH _____

ARRIER CO.

LL NO.:

SAMPLE RECEIPT REMARKS

CHARGE CODE

RESULTS & INVOICES TO:

FIELD SERVICES LABORATORY
EL PASO NATURAL GAS COMPANY
P. O. BOX 4990
FARMINGTON, NEW MEXICO 87499

505-599-2144

FAX: 505-599-2261

FM-08-0565A (Rev. 03-94)

RECORD OF SUBSURFACE EXPLORATION

PHILIP SERVICES CORP.
0 Monroe Road
Farmington, New Mexico 87401
(505) 326-2262 FAX (505) 326-2388

Borehole # BH-1
Well # NA
Page 1 of

Project Number 19643 Phase 1001.77
Project Name EPFS PITS >10
Project Location NORDHAUS WN FEDERAL WELL 74491

Elevation
Borehole Location LTR: N S: 18 T: 25 R: 7
GWL Depth NA
Drilled By K. PADILLA
Well Logged By H. BRADBURY
Date Started 8/24/98
Date Completed 8/24/98

Drilling Method 4 1/4 ID HSA
Air Monitoring Method PID

Depth (Feet)	Sample Number	Sample Interval	Sample Type & Recovery (inches)	Sample Description Classification System: USCS	USCS Symbol	Depth Lithology Change (feet)	Air Monitoring Units: PPM BZ	BH	S/HS	Drilling Conditions & Blow Counts
0										BZ=Breathing Zone BH=Borehole S/HS=Sample/Headspace
5				EXCAVATION SAMPLE collected at 8'						
10	1	10-11	12	LT BR silty SAND FINE SAND dense, dry	SM		0	0	1269 / 2279	1343 hrs
15	2	15-16	6"	LT BR silty SAND, FINE SAND dense, dry.	SM		1	23	HB 310	1354 hrs
20	3	20-21	6"	DK GR SILTSTONE hard CEMENTED, dry			0	25	27 / 174	1421 hrs. hard drilling
				TOB 21'						
25										
30										
35										
40										

Comments: HAB 10 20-21' WAS collected & SENT to lab for BTEX, TPH
AUGER REFUSAL at 21'. GW NOT ENCOUNTERED. BH grouted to SURFACE.

Geologist Signature Holly Bradbury

R/1 R/GR\Drilling

EL PASO FIELD SERVICES

FIELD SERVICES LABORATORY
ANALYTICAL REPORT
PIT CLOSURE PROJECT

SAMPLE IDENTIFICATION

	Field ID	Lab ID
SAMPLE NUMBER:	HAB10	980588
MTR CODE | SITE NAME:	74491	Nordhaus WN Federal
SAMPLE DATE | TIME (Hrs):	8/24/98	1421
PROJECT:	Phase II Drilling	
DATE OF TPH EXT. | ANAL.:	8/28/98	8/28/98
DATE OF BTEX EXT. | ANAL.:	8/27/98	8/27/98
TYPE | DESCRIPTION:	VG	SOIL

Field Remarks: 20-21'

RESULTS

PARAMETER	RESULT	UNITS	QUALIFIERS			
			DF	Q	M(g)	V(ml)
BENZENE	<0.5	MG/KG				
TOLUENE	<0.5	MG/KG				
ETHYL BENZENE	<0.5	MG/KG				
TOTAL XYLENES	<1.5	MG/KG				
TOTAL BTEX	<3	MG/KG				
TPH (MOD.8015)	<20	MG/KG				
HEADSPACE PID	174	PPM				
PERCENT SOLIDS	94.7	%				

-- TPH is by EPA Method 418.1 and BTEX is by EPA Method 8020 --

e Surrogate Recovery was at 95.6 % for this sample All QA/QC was acceptable.
rative:

DF = Dilution Factor Used

Approved By: Dolan Fowler Date: 9/14/98

PINNACLE LABORATORIES

CLIENT	: EL PASO FIELD SERVICES	PINNACLE ID	: 808083
PROJECT #	: (none)	DATE RECEIVED	: 8/28/98
PROJECT NAME	: PHASE II DRILLING	REPORT DATE	: 9/9/98

AEN ID. #	CLIENT DESCRIPTION	MATRIX	DATE COLLECTED
01	980586	NON-AQ	8/24/98
02	980587	NON-AQ	8/24/98
03	980588	NON-AQ	8/24/98

2709-D Pan American Freeway, NE, Albuquerque, New Mexico 87107 Phone: 505-344-3777, Fax: 505-344-4413

PINNACLE LABORATORIES

GAS CHROMOTOGRAPHY RESULTS

TEST : EPA 8015 MODIFIED (DIRECT INJECT)
CLIENT : EL PASO FIELD SERVICES
PROJECT # : (none)
PROJECT NAME : PHASE II DRILLING

PINNACLE I.D.: 808083

SAMPLE ID. #	CLIENT I.D.	MATRIX	DATE SAMPLED	DATE EXTRACTED	DATE ANALYZED	DIL. FACTOR
01	980586	NON-AQ	8/24/98	8/28/98	8/28/98	1
02	980587	NON-AQ	8/24/98	8/28/98	8/28/98	1
03	980588	NON-AQ	8/24/98	8/28/98	8/28/98	1

PARAMETER	DET. LIMIT	UNITS	01	02	03
FUEL HYDROCARBONS, C6-C10	10	MG/KG	< 10	< 10	< 10
FUEL HYDROCARBONS, C10-C22	5.0	MG/KG	< 5.0	< 5.0	< 5.0
FUEL HYDROCARBONS, C22-C36	5.0	MG/KG	< 5.0	< 5.0	< 5.0
CALCULATED SUM:					
SURROGATE:					
O-TERPHENYL (%)			95	105	108
SURROGATE LIMITS	(66 - 151)				

CHEMIST NOTES:
N/A

2709-D Pan American Freeway, NE, Albuquerque, New Mexico 87107 Phone: 505-344-3777, Fax: 505-344-4413

PINNACLE LABORATORIES

GAS CHROMOTOGRAPHY RESULTS
REAGENT BLANK

TEST	: EPA 8015 MODIFIED (DIRECT INJECT)		
BLANK I.D.	: 082898	PINNACLE I.D.	: 808083
CLIENT	: EL PASO FIELD SERVICES	DATE EXTRACTED	: 8/28/98
PROJECT #	: (none)	DATE ANALYZED	: 8/28/98
PROJECT NAME	: PHASE II DRILLING	SAMPLE MATRIX	: NON-AQ

PARAMETER	UNITS	
FUEL HYDROCARBONS, C6-C10	MG/KG	< 10
FUEL HYDROCARBONS, C10-C22	MG/KG	< 5.0
FUEL HYDROCARBONS, C22-C36	MG/KG	< 5.0

SURROGATE:		
O-TERPHENYL (%)		130
SURROGATE LIMITS	(80 - 151)	

CHEMIST NOTES:
N/A

American Environmental Network (NM), Inc.

CHAIN OF CUSTODY

DATE: 8/27/98 PAGE: 1 OF 1

PROJECT MANAGER: John Lambdin

COMPANY: El Paso Field Services
ADDRESS: 770 W. NAVAJO
Farmington, NM 87401
PHONE: (505) 599-2144
FAX: (505) 599-2261

BILL TO: Above
COMPANY:
ADDRESS:

				Petroleum Hydrocarbons (418.1) TRPH	(MOD.8015) Diesel/Direct Inject	(M8015) Gas/Purge & Trap	8021 (BTEX)/8015 (Gasoline)	8021 (BTEX) ☐ MTBE ☐ TMB ☐ PCE	8021 (TCL)	8021 (EDX)	8021 (HALO)	8021 (CUST)	504.1 EDB ☐ / DBCP ☐		8260 (TCL) Volatile Organics	8260 (Full) Volatile Organics	8260 (CUST) Volatile Organics	8260 (Landfill) Volatile Organics	Pesticides /PCB (608/8081)	Herbicides (615/8151)	Base/Neutral/Acid Compounds GC/MS (625/8270)	Polynuclear Aromatics (610/8310)	General Chemistry:			Priority Pollutant Metals (13)	Target Analyte List Metals (23)	RCRA Metals (8)	RCRA Metals by TCLP (Method 1311)	Metals:	NUMBER OF CONTAINERS
980586	8/24/98	0940	Soil		X																											
980587	8/24/98	1143	Soil		X																											
980588	8/24/98	1421	Soil		X																											

PROJECT INFORMATION

PROJ. NO.:
PROJ. NAME: Phase II Drilling
P.O. NO.:
SHIPPED VIA: Fed Ex

SAMPLE RECEIPT

(RUSH) ☐ 24hr ☐ 48hr ☐ 72hr ☐ 1 WEEK (NORMAL) ☒
CERTIFICATION REQUIRED: ☐ NM ☐ SDWA ☐ OTHER
METHANOL PRESERVATION ☐
COMMENTS: FIXED FEE ☐

RELINQUISHED BY:
Signature: Marlon Hopper Time: 0810
Printed Name: Marlon Hopper Date: 8/27/98
Company: EPFS

RECEIVED BY:
Signature: Time:
Printed Name: Date:
Company:

RELINQUISHED BY:
Signature: Time:
Printed Name: Date:
Company:

RECEIVED BY (LAB):
Signature: Time:
Printed Name: Date:
Company:

PLEASE FILL THIS FORM IN COMPLETELY.

BTEX SOIL SAMPLE WORKSHEET

File	: 980588	Date Printed	: 8/31/98
Soil Mass (g)	: 5.21	Multiplier (L/g)	: 0.00096
Extraction vol. (mL)	: 10	CAL FACTOR (Analytical):	200
Shot Volume (uL)	: 50	CAL FACTOR (Report):	0.19194

				Det. Limit
		DILUTION FACTOR:	1	
Benzene (ug/L)	: <0.5	Benzene (mg/Kg):	#VALUE!	0.480
Toluene (ug/L)	: <0.5	Toluene (mg/Kg):	#VALUE!	0.480
Ethylbenzene (ug/L)	: <0.5	Ethylbenzene (mg/Kg):	#VALUE!	0.480
p & m-xylene (ug/L)	: <1.0	p & m-xylene (mg/Kg):	#VALUE!	0.960
o-xylene (ug/L)	: <0.5	o-xylene (mg/Kg):	#VALUE!	0.480
		Total xylenes (mg/Kg):	#VALUE!	1.440
		Total BTEX (mg/Kg):	#VALUE!	

Phase II Drilling

10-1-98 Anal.
10-1-98 Chem.

10-1-98 App.

El Paso Natural Gas Company

CHAIN OF CUSTODY RECORD

Page 1 of 1

PROJECT NUMBER: # 24324

PROJECT NAME: Pit Closure Project

SAMPLERS: (Signature) Holly Bradley

DATE: 8/24/98

CONTRACT LABORATORY P. O. NUMBER: 2.0

LAB ID	DATE	TIME	MATRIX	FIELD ID	TOTAL NUMBER OF CONTAINERS	SAMPLE TYPE	TPH EPA 418.1	BTEX EPA 8020	LAB PID	TPH 8015	FIELD PID	SEQUENCE #	REMARKS
980588	8/24/98	1421 hrs	Soil	HAB10	1	VG					174	10	NORDHAUS WN FEDERAL 74491 20-21'

HAB 8/24/98

RELINQUISHED BY: (Signature)	DATE/TIME	RECEIVED BY: (Signature)	RELINQUISHED BY: (Signature)	DATE/TIME	RECEIVED BY: (Signature)
Holly Bradley	8/24/98 1620 hrs	[signature]	[signature]	8/26/98 09:15	
RELINQUISHED BY: (Signature)	DATE/TIME	RECEIVED BY: (Signature)	RELINQUISHED BY: (Signature)	DATE/TIME	RECEIVED OF LABORATORY BY: (Signature)
		[signature]	[signature]	8-26-98 0916	CRVels

REQUESTED TURNAROUND TIME: ☐ ROUTINE ☐ RUSH

CARRIER CO.

BILL NO.:

SAMPLE RECEIPT REMARKS: Cool + Intact 32°F

CHARGE CODE

RESULTS & INVOICES TO:

FIELD SERVICES LABORATORY
EL PASO NATURAL GAS COMPANY
P. O. BOX 4990
FARMINGTON, NEW MEXICO 87499

505-599-2144 FAX: 505-599-2261

White - *Testing Laboratory* Canary - *EPNG Lab* Pink - *Field Sampler*

FM-08-0565 A (Rev. 05-94)