Form 3160-3
(December 1990)

SUBMIT IN TRIPLICATE*
(Other instructions on reverse side)

Form approved.
Budget Bureau No. 1004-0136
Expires: December 31, 1991

UNITED STATES
DEPARTMENT OF THE INTERIOR
BUREAU OF LAND MANAGEMENT

APPLICATION FOR PERMIT TO DRILL OR DEEPEN

5. LEASE DESIGNATION AND SERIAL NO.: NMSF-079116

6. IF INDIAN, ALLOTTEE OR TRIBE NAME:

7. UNIT AGREEMENT NAME:

8. FARM OR LEASE NAME, WELL NO.: Hancock 5R

9. API WELL NO.: 30-045-30058

10. FIELD AND POOL, OR WILDCAT: Kutz Pictured Cliffs; West

11. SEC., T., R., M., OR BLK. AND SURVEY OR AREA: Sec. 1-T27N-R12w

12. COUNTY OR PARISH: San Juan

13. STATE: NM

1a. TYPE OF WORK: DRILL [X] DEEPEN [ ]

b. TYPE OF WELL: OIL WELL [ ] GAS WELL [X] OTHER SINGLE ZONE [X] MULTIPLE ZONE [ ]

2. NAME OF OPERATOR: LOUIS DREYFUS NATURAL GAS CORP.

3. ADDRESS AND TELEPHONE NO.: (405) 749-1300
14000 Quail Springs Parkway, Suite 600, Oklahoma City, OK 73134

4. LOCATION OF WELL (Report location clearly and in accordance with any State requirements.*)
At surface: 1190' FNL & 950' FWL (UL D)

At proposed prod. zone:

RECEIVED
NOV 03 1999
BUREAU OF LAND MANAGEMENT
FARMINGTON FIELD OFFICE

14. DISTANCE IN MILES AND DIRECTION FROM NEAREST TOWN OR POST OFFICE*: 13.1 miles from Bloomfield, NM

15. DISTANCE FROM PROPOSED* LOCATION TO NEAREST PROPERTY OR LEASE LINE, FT. (Also to nearest drlg. unit line, if any): 950' FWL of lease and drilling unit.

16. NO. OF ACRES IN LEASE: 2,560.22

17. NO. OF ACRES ASSIGNED TO THIS WELL: 160.03 NW/4

18. DISTANCE FROM PROPOSED LOCATION* TO NEAREST WELL, DRILLING, COMPLETED, OR APPLIED FOR, ON THIS LEASE, FT.: 204' from Hancock 5; well TA; will be plugged if 5R is successful.

19. PROPOSED DEPTH: 2000'

20. ROTARY OR CABLE TOOLS: Rotary

21. ELEVATIONS (Show whether DF, RT, GR, etc.): 5996' GR

22. APPROX. DATE WORK WILL START*: December 1, 1999

23. This action is subject to technical and procedural review pursuant to 43 CFR 3165.3 and appeal pursuant to 43 CFR 3165.4.

DRILLING OPERATIONS AUTHORIZED ARE SUBJECT TO COMPLIANCE WITH ATTACHED "GENERAL REQUIREMENTS"

PROPOSED CASING AND CEMENTING PROGRAM

SIZE OF HOLE	GRADE, SIZE OF CASING	WEIGHT PER FOOT	SETTING DEPTH	QUANTITY OF CEMENT
11"	8-5/8" J-55	24#	250'	185 sx., circulate to surface
7-7/8"	5-1/2" J-55	15.5#	2000'	300 sx., circulate to surface

1. Drill 11" hole to ±250'. Set 8-5/8" J-55 24# surface casing @ TD, circulate cement w/185 sx. Cl. H + 3% CaCl2 + .25#/sx. Cello-Seal.
2. Drill 7-7/8" hole to ±2000'. Set 5-1/2" production casing @ 2000'. Cement w/200 sx. Halco Light + 5#/sk. Gilsonite + 1/4#/sk. Flocelle followed by 100 sx. 50/50/POZ A +2% Gel + 0.5% Halad-322. Circulate cement to surface.

See attached "Exhibit A" for BOP program.

MAY 2000 RECEIVED OIL CON. DIV. DIST. 3

HOLD C104 FOR P&A notice on Hancock #5
API #30 045 06926

IN ABOVE SPACE DESCRIBE PROPOSED PROGRAM: If proposal is to deepen, give data on present productive zone and proposed new productive zone. If proposal is to drill or deepen directionally, give pertinent data on subsurface locations and measured and true vertical depths. Give blowout preventer program, if any.

24.
SIGNED Tanya D. Bryant TITLE Regulatory Technician DATE 10/28/99

(This space for Federal or State office use)

PERMIT NO. _____ APPROVAL DATE _____

Application approval does not warrant or certify that the applicant holds legal or equitable title to those rights in the subject lease which would entitle the applicant to conduct operations thereon.

CONDITIONS OF APPROVAL, IF ANY:

/s/ Jim Lovato

APPROVED BY _____ TITLE _____ DATE MAY 24 2000

OK

*See Instructions On Reverse Side

NMOCD

Title 18 U.S.C. Section 1001, makes it a crime for any person knowingly and willfully to make to any department or agency of the United States any false, fictitious or fraudulent statements or representations as to any matter within its jurisdiction.

District I
PO Box 1980, Hobbs, NM 88241-1980
District II
811 South First, Artesia, NM 88210
District III
1000 Rio Brazos Rd., Aztec, NM 87410
District IV
2040 South Pacheco, Santa Fe, NM 87505

State of New Mexico
Energy, Minerals & Natural Resources Department

OIL CONSERVATION DIVISION
2040 South Pacheco
Santa Fe, NM 87505

RECEIVED
NOV 03 1999
BUREAU OF LAND MANAGEMENT
FARMINGTON FIELD OFFICE

Form C-102
Revised October 18, 1994
Instructions on back
Submit to Appropriate District Office
State Lease - 4 Copies
Fee Lease - 3 Copies

☐ AMENDED REPORT

WELL LOCATION AND ACREAGE DEDICATION PLAT

[1] API Number	[2] Pool Code	[3] Pool Name
30-045-30038	79680	[redacted] Kutz Pictured Cliffs; West

[4] Property Code	[5] Property Name	[6] Well Number
5959	HANCOCK	5R

[7] OGRID No.	[8] Operator Name	[9] Elevation
025773	LOUIS DREYFUS NATURAL GAS CORP.	5996

[10] Surface Location

UL or lot no.	Section	Township	Range	Lot Idn	Feet from the	North/South line	Feet from the	East/West line	County
D	1	27N	12W		1190	NORTH	950	WEST	SAN JUAN

[11] Bottom Hole Location If Different From Surface

UL or lot no.	Section	Township	Range	Lot Idn	Feet from the	North/South line	Feet from the	East/West line	County

[12] Dedicated Acres	[13] Joint or Infill	[14] Consolidation Code	[15] Order No.
160 03 NW/4			

NO ALLOWABLE WILL BE ASSIGNED TO THIS COMPLETION UNTIL ALL INTERESTS HAVE BEEN CONSOLIDATED OR A NON-STANDARD UNIT HAS BEEN APPROVED BY THE DIVISION

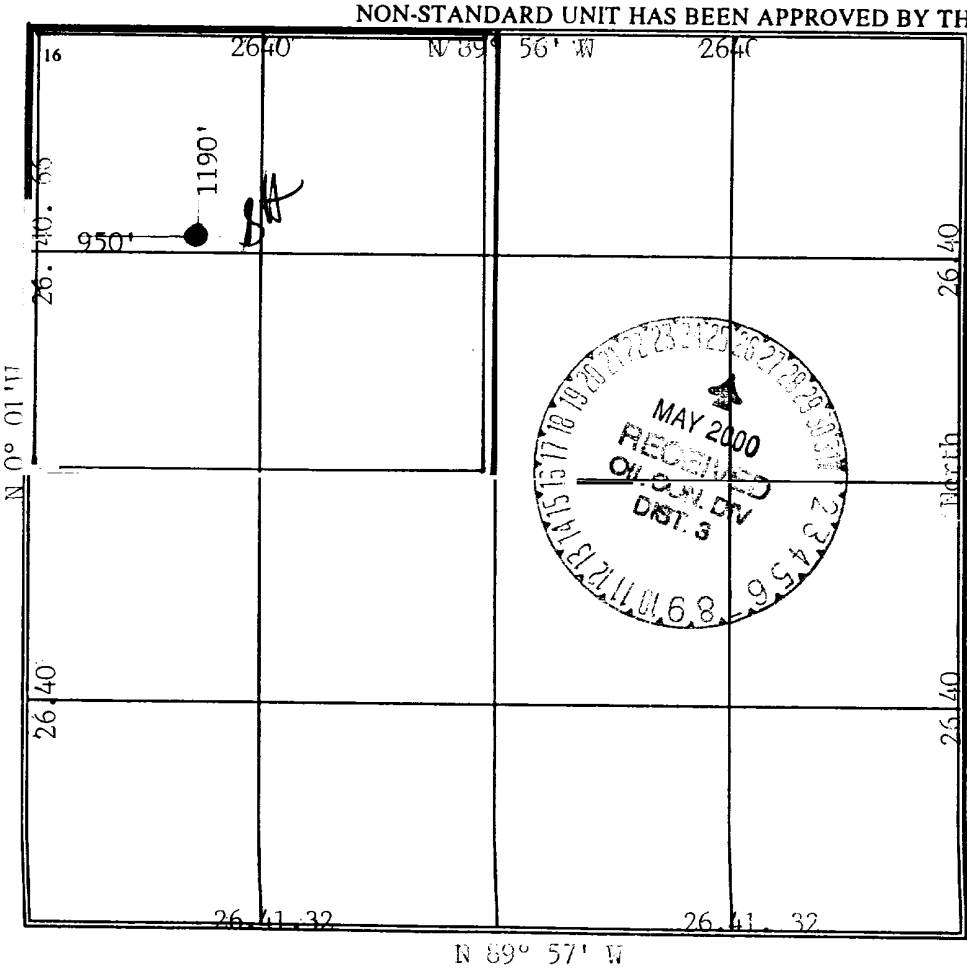

[17] OPERATOR CERTIFICATION

I hereby certify that the information contained herein is true and complete to the best of my knowledge and belief

Signature: Terrye D. Bryant

Printed Name: Terrye D. Bryant

Title: Regulatory Technician

Date: 10/28/99

[18] SURVEYOR CERTIFICATION

I hereby certify that the well location shown on this plat was plotted from field notes of actual surveys made by me or under my supervision, and that the same is true and correct to the best of my belief.

Date of Survey: JULY 19, 1999

Signature and Seal of Professional Surveyor:

CECIL B. TULLIS
NEW MEXICO
9672
REGISTERED PROFESSIONAL LAND SURVEYOR

Cecil B. Tullis

Certificate Number 9672

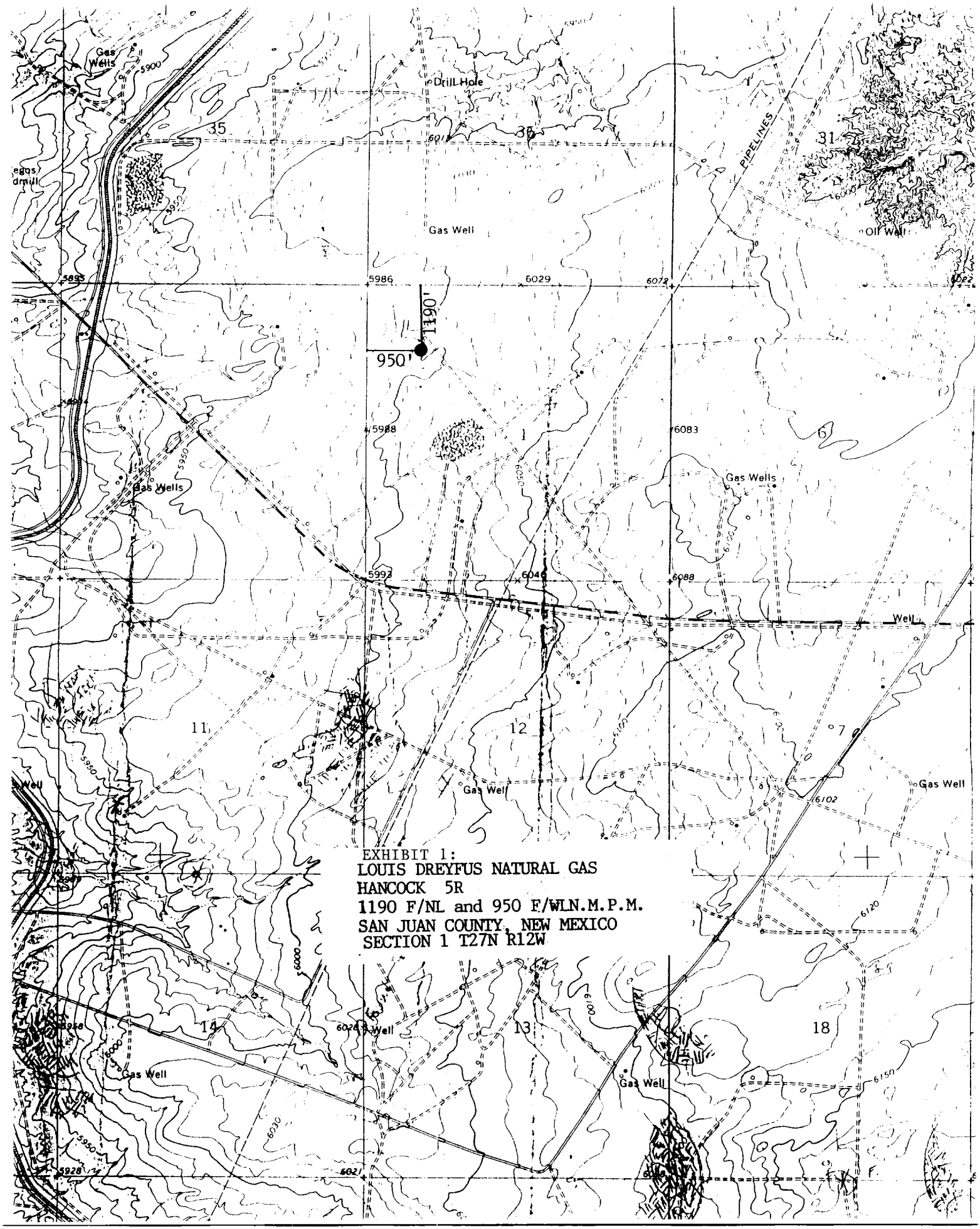

EXHIBIT 1:
LOUIS DREYFUS NATURAL GAS
HANCOCK 5R
1190 F/NL and 950 F/WLN.M.P.M.
SAN JUAN COUNTY, NEW MEXICO
SECTION 1 T27N R12W

EXHIBIT "A"

BOP STACK

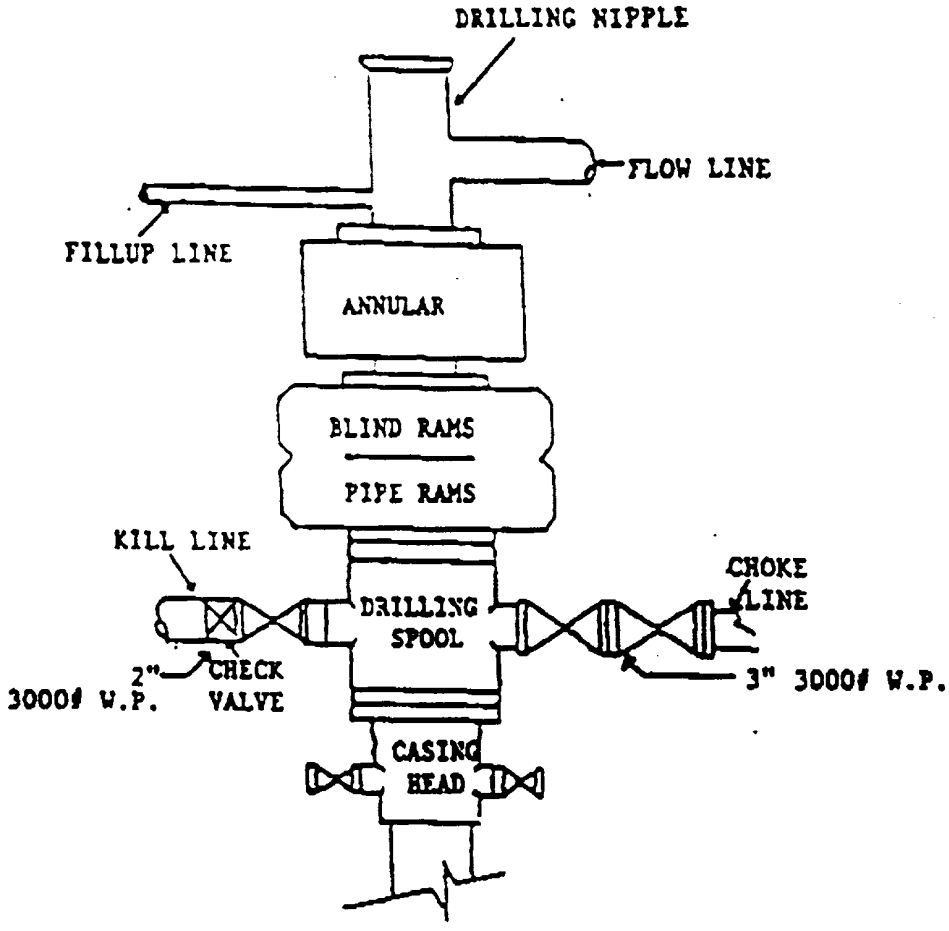

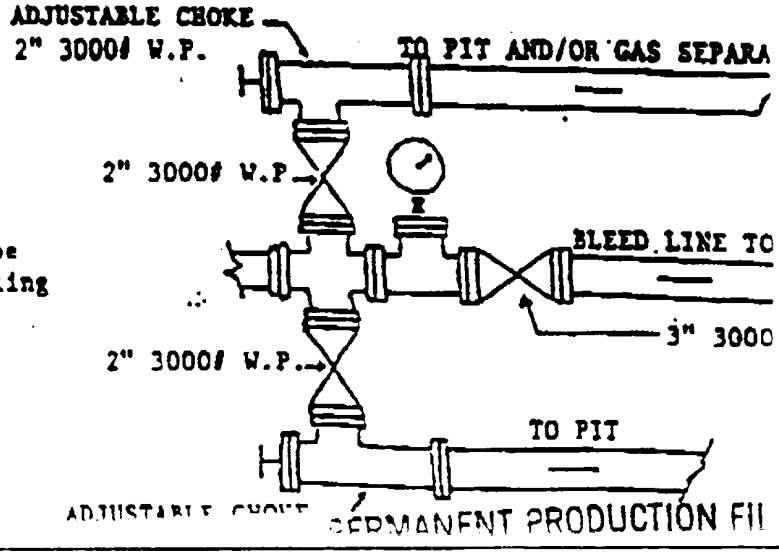

NOTE: BOP side outlets may be used in place of drilling spool.