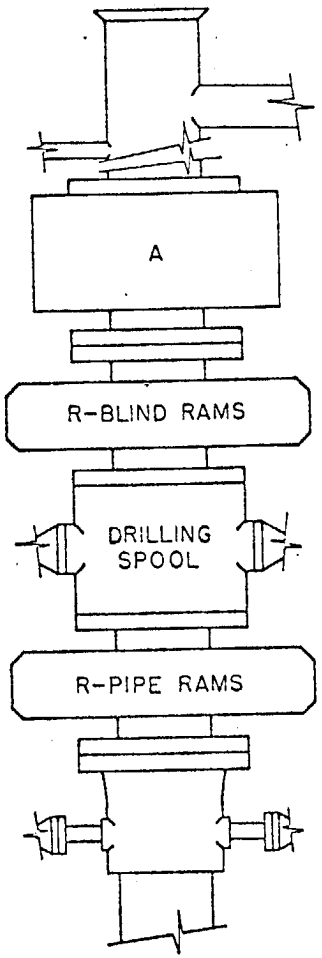

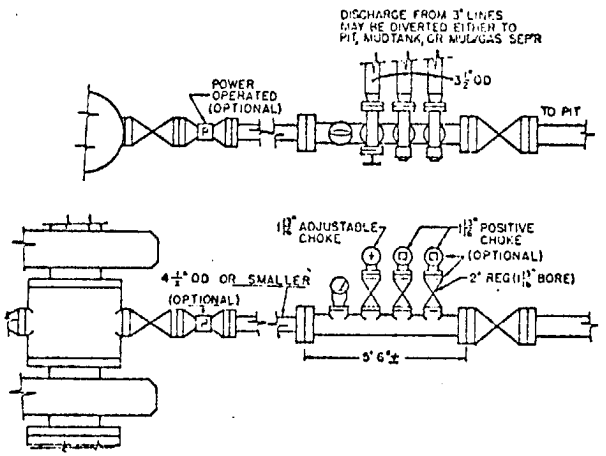

BLOW OUT PREVENTER PROGRAM

API CLASS 5M