District I
1625 N. French Drive, Hobbs, NM 88240
District II
811 S. First St., Artesia, NM 88210
District III
1000 Rio Brazos Road, Aztec, NM 87410
District IV
1220 S. St Francis Dr, Santa Fe, NM 87505

State of New Mexico
Energy, Minerals and Natural Resources Department

OIL CONSERVATION DIVISION
1220 S. St Francis Drive
Santa Fe, New Mexico 87505

Form C-107-B
Revised August 1, 2011

Submit the original application to the Santa Fe office with one copy to the appropriate District Office.

APPLICATION FOR SURFACE COMMINGLING (DIVERSE OWNERSHIP)

OPERATOR NAME: OXY USA INC.
OPERATOR ADDRESS: PO BOX 4294, HOUSTON, TX, 77210
APPLICATION TYPE:

☐ Pool Commingling ☐ Lease Commingling ☒ Pool and Lease Commingling ☐ Off-Lease Storage and Measurement (Only if not Surface Commingled)

LEASE TYPE: ☐ Fee ☒ State ☒ Federal

Is this an Amendment to existing Order? ☒ Yes ☐ No If "Yes", please include the appropriate Order No. PLC 844F
Have the Bureau of Land Management (BLM) and State Land office (SLO) been notified in writing of the proposed commingling
☒ Yes ☐ No

(A) POOL COMMINGLING
Please attach sheets with the following information

(1) Pool Names and Codes	Gravities / BTU of Non-Commingled Production	Calculated Gravities / BTU of Commingled Production		Calculated Value of Commingled Production	Volumes
SEE ATTACHED					

(2) Are any wells producing at top allowables? ☐ Yes ☒ No
(3) Has all interest owners been notified by certified mail of the proposed commingling? ☒ Yes ☐ No.
(4) Measurement type: ☐ Metering ☒ Other (Specify) ALLOCATION BY WELL TEST UPSTREAM OF EACH FACILITY'S SALES QUALITY METER
(5) Will commingling decrease the value of production? ☐ Yes ☒ No If "yes", describe why commingling should be approved

(B) LEASE COMMINGLING
Please attach sheets with the following information

(1) Pool Name and Code.
(2) Is all production from same source of supply? ☐ Yes ☐ No
(3) Has all interest owners been notified by certified mail of the proposed commingling? ☐ Yes ☐ No
(4) Measurement type: ☐ Metering ☐ Other (Specify)

(C) POOL and LEASE COMMINGLING
Please attach sheets with the following information

(1) Complete Sections A and E.

(D) OFF-LEASE STORAGE and MEASUREMENT
Please attached sheets with the following information

(1) Is all production from same source of supply? ☐ Yes ☐ No
(2) Include proof of notice to all interest owners.

(E) ADDITIONAL INFORMATION (for all application types)
Please attach sheets with the following information

(1) A schematic diagram of facility, including legal location.
(2) A plat with lease boundaries showing all well and facility locations. Include lease numbers if Federal or State lands are involved.
(3) Lease Names, Lease and Well Numbers, and API Numbers.

I hereby certify that the information above is true and complete to the best of my knowledge and belief.

SIGNATURE:_____ TITLE:_REGULATORY ENGINEER_____ DATE:___09/05/2025_____

TYPE OR PRINT NAME__SANDRA MUSALLAM_____ TELEPHONE NO.:___713-366-5106_____

E-MAIL ADDRESS:___SANDRA_MUSALLAM@OXY.COM_____

Revised March 23, 2017

RECEIVED:	REVIEWER:	TYPE:	APP NO:

ABOVE THIS TABLE FOR OCD DIVISION USE ONLY

NEW MEXICO OIL CONSERVATION DIVISION
- Geological & Engineering Bureau –
1220 South St. Francis Drive, Santa Fe, NM 87505

ADMINISTRATIVE APPLICATION CHECKLIST

THIS CHECKLIST IS MANDATORY FOR ALL ADMINISTRATIVE APPLICATIONS FOR EXCEPTIONS TO DIVISION RULES AND REGULATIONS WHICH REQUIRE PROCESSING AT THE DIVISION LEVEL IN SANTA FE

Applicant: OXY USA INC. **OGRID Number:** 16696
Well Name: TOP SPOT 12_13 FEDERAL COM 1H & MULTIPLE **API:** 30-015-48594 & MULTIPLE
Pool: BILBREY BASIN;BONE SPRING & MULTIPLE **Pool Code:** 5695 & MULTIPLE

SUBMIT ACCURATE AND COMPLETE INFORMATION REQUIRED TO PROCESS THE TYPE OF APPLICATION INDICATED BELOW

1) **TYPE OF APPLICATION:** Check those which apply for [A]
   A. Location – Spacing Unit – Simultaneous Dedication
   ☐ NSL ☐ NSP (PROJECT AREA) ☐ NSP (PRORATION UNIT) ☐ SD

   B. Check one only for [I] or [II]
   [I] Commingling – Storage – Measurement
   ☐ DHC ☐ CTB ☒ PLC ☐ PC ☐ OLS ☐ OLM
   AMENDMENT TO PLC 844F
   [II] Injection – Disposal – Pressure Increase – Enhanced Oil Recovery
   ☐ WFX ☐ PMX ☐ SWD ☐ IPI ☐ EOR ☐ PPR

FOR OCD ONLY
☐ Notice Complete
☐ Application Content Complete

2) **NOTIFICATION REQUIRED TO:** Check those which apply.
   A. ☐ Offset operators or lease holders
   B. ☒ Royalty, overriding royalty owners, revenue owners
   C. ☐ Application requires published notice
   D. ☒ Notification and/or concurrent approval by SLO
   E. ☒ Notification and/or concurrent approval by BLM
   F. ☐ Surface owner
   G. ☒ For all of the above, proof of notification or publication is attached, and/or,
   H. ☐ No notice required

3) **CERTIFICATION:** I hereby certify that the information submitted with this application for administrative approval is **accurate** and **complete** to the best of my knowledge. I also understand that **no action** will be taken on this application until the required information and notifications are submitted to the Division.

Note: Statement must be completed by an individual with managerial and/or supervisory capacity.

SANDRA MUSALLAM
Print or Type Name

09/05/2025
Date

(713) 366-5106
Phone Number

Signature

SANDRA_MUSALLAM@OXY.COM
e-mail Address

APPLICATION FOR POOL LEASE COMMINGLE & OFF-LEASE MEASUREMENT AND SALES
Gas Production at Various Facilities in Lost Tank Area

OXY USA INC requests to amend PLC 844F for gas production for facilities in the Lost Tank area. Olive Won wells are being added to Lost Tank 25 Facility.

Each facility has a sales-quality orifice meter (BLM gas FMP or equivalent meter) that continuously measures gas volume before it leaves the facility. Any commingling of wells upstream of these meters is per allocation by well test to each individual well and has been approved according to the Commingle Orders for each individual facility (listed below). The gas sales meters are located at I-13-22S-31E, C-01-22S-31E, and F-05-T22S-R32E.

This commingle request also includes future wells within the same pools and leases/CAs/PAs of the wells listed below.

WELLS TO BE ADDED:

Lost Tank 25 CPF (K-25-22S-31E)
Amendment to PLC 929A with allocation by well test is pending approval

LOST TANK 25 CPF	PLC 929A
WELL NAME	API
WELLS TO BE ADDED	
OLIVE WON UNIT 231H	30-015-56502
OLIVE WON UNIT 232H	30-015-56503
OLIVE WON UNIT 233H	30-015-56509
OLIVE WON UNIT 234H (name change pending from EVIL OLIVE 26_23 FED COM 34H)	30-015-56510
OLIVE WON UNIT 235H (name change pending from EVIL OLIVE 26_23 FED COM 35H)	30-015-56521
OLIVE WON UNIT 236H (name change pending from EVIL OLIVE 26_23 FED COM 36H)	30-015-56522
OLIVE WON UNIT 237H (name change pending from EVIL OLIVE 26_23 FED COM 37H)	30-015-56524
EXISTING WELLS	
OLIVE WON UNIT 33H	30-015-55187
OLIVE WON UNIT 32H	30-015-55179
OLIVE WON UNIT 34H	30-015-55189
OLIVE WON UNIT 31H	30-015-55177
OLIVE WON UNIT 35H	30-015-55215
OLIVE WON UNIT 36H	30-015-55180
OLIVE WON UNIT 37H	30-015-55181
OLIVE WON UNIT 4H	30-015-55182
OLIVE WON UNIT 71H	30-015-55183
OLIVE WON UNIT 131H	30-015-54746
OLIVE WON UNIT 132H	30-015-54747
OLIVE WON UNIT133H	30-015-54748
OLIVE WON UNIT 134H	30-015-54749
OLIVE WON UNIT 135H	30-015-54755
OLIVE WON UNIT 136H	30-015-54756
OLIVE WON UNIT 137H	30-015-54757
OLIVE WON UNIT 174H	30-015-54734
OLIVE WON UNIT 101H	30-015-56138
OLIVE WON UNIT 102H	30-015-56139
OLIVE WON UNIT 103H	30-015-56140
OLIVE WON UNIT 104H	30-015-56142
OLIVE WON UNIT 105H	30-015-54655

EXISTING FACILITIES IN PLC 844F:

Lost Tank 18 CPF Train #1 (M-18-22S-32E)
Allocation by well test approved per Order PLC 834

LOST TANK 18 CPF TRAIN #1	PLC 834
WELL NAME	API
DR PI FEDERAL UNIT 17_8 021H	30-025-48282
DR PI FEDERAL UNIT 17_8 023H	30-025-48947
DR PI FEDERAL UNIT 17_8 025H	30-025-48949
DR PI FEDERAL UNIT 17_8 026H	30-025-48950
DR PI FEDERAL UNIT 17_8 031H	30-025-49147
DR PI FEDERAL UNIT 17_8 032H	30-025-49148
DR PI FEDERAL UNIT 17_8 034H	30-025-48951
DR PI FEDERAL UNIT 17_8 035H	30-025-48952
DR PI FEDERAL UNIT 17_8 311H	30-025-49152
DR PI FEDERAL UNIT 17_8 312H	30-025-48955
DR PI FEDERAL UNIT 17_8 11H	30-025-48944
DR PI FEDERAL UNIT 17_8 12H	30-025-48945
DR PI FEDERAL UNIT 17_8 24H	30-025-48948
DR PI FEDERAL UNIT 17_8 71H	30-025-49150
DR PI FEDERAL UNIT 17_8 72H	30-025-49151
DR PI FEDERAL UNIT 17_8 73H	30-025-48953
DR PI FEDERAL UNIT 17_8 74H	30-025-48954
DR PI FEDERAL UNIT 18-7 031H	30-025-48160
DR PI FEDERAL UNIT 18-7 032H	30-025-48024
DR PI FEDERAL UNIT 18-7 034H	30-025-48025
DR PI FEDERAL UNIT 18-7 311H	30-025-48166
DR PI FEDERAL UNIT 18-7 312H	30-025-48167
DR PI FEDERAL UNIT 18-7 313H	30-025-48168
DR PI FEDERAL UNIT 18-7 21H	30-025-47835
DR PI FEDERAL UNIT 18-7 22H	30-025-48157
DR PI FEDERAL UNIT 18-7 24H	30-025-47867
DR PI FEDERAL UNIT 18-7 25H	30-025-48159
DR PI FEDERAL UNIT 18-7 71H	30-025-48162
DR PI FEDERAL UNIT 18-7 72H	30-025-48163
DR PI FED UNIT 18_7 IPP 11H	30-025-54178
DR PI FED UNIT 18_7 IPP 01H	30-025-54209
DR PI FED UNIT 18_7 IPP 12H	30-025-54179
DR PI FED UNIT 18_7 IPP 04H	30-025-54177
DR PI FED UNIT 18_7 IPP 02H	30-025-54175
DR PI FED UNIT 18_7 IPP 03H	30-025-54176
DR PI FED UNIT 18_7 IPP 15H	30-025-54180

Lost Tank 18 CPF Train #2 (M-18-22S-32E)
Allocation by well test is approved per PLC 878A

LOST TANK 18 CPF TRAIN #2	PLC 878A
WELL NAME	API
TOP SPOT 12_13 FEDERAL 22H	30-015-47889
TOP SPOT 12_13 FEDERAL 23H	30-015-47885
TOP SPOT 12_13 FED COM 24H	30-015-47954
TOP SPOT 12_13 FED COM 25H	30-015-47639
TOP SPOT 12_13 FED COM 33H	30-015-47953
TOP SPOT 12_13 FED COM 26H	30-015-47888
TOP SPOT 12_13 FED COM 1H	30-015-48594
TOP SPOT 12_13 FED COM 11H	30-015-48595
TOP SPOT 12_13 FED COM 21H	30-015-47771
TOP SPOT 12_13 FED COM 31H	30-015-48597
TOP SPOT 12_13 FED COM 32H	30-015-48596
TOP SPOT 12_13 FED COM 34H	30-015-47949
TOP SPOT 12_13 FED COM 35H	30-015-47887
TOP SPOT 12_13 FED COM 311H	30-015-47627
TOP SPOT 12_13 FED COM 312H	30-015-47626
TOP SPOT 12_13 FED COM 313H	30-015-47625

Lost Tank 18 CPF Train #3 (M-18-22S-32E)
Allocation by well test approved per Order PLC 937

LOST TANK 18 CPF TRAIN #3	PLC 937
WELL NAME	API
LOST TANK 30_19 FEDERAL COM 22H	30-025-47543
LOST TANK 30_19 FEDERAL COM 11H	30-025-47941
LOST TANK 30_19 FEDERAL COM 21H	30-025-47942
LOST TANK 30_19 FEDERAL COM 32H	30-025-47944
LOST TANK 30_19 FEDERAL COM 71H	30-025-47945
LOST TANK 30_19 FEDERAL COM 33H	30-025-48464
LOST TANK 30_19 FEDERAL COM 41H	30-025-48691

Lost Tank 30-19 Battery (D-19-22S-32E)
Allocation by well test approved per Order PLC 657B

LOST TANK 30-19 BATTERY	PLC 657B
WELL NAME	API
LOST TANK 30-19 FEDERAL COM #001H	30-025-46474
LOST TANK 30-19 FEDERAL COM #031H	30-025-45182

Lost Tank 5 CPF Train #1 (F-05-T22S-R32E)
Allocation by well test is approved per PLC 922

LOST TANK 5 CPF TRAIN #1	PLC 922
WELL NAME	API
GOLD LOG 4_9 FED COM 71H	30-025-52224
GOLD LOG 4_9 FED COM 72H	30-025-52190
GOLD LOG 4_9 FED COM 73H	30-025-52208
GOLD LOG 4_9 FED COM 74H	30-025-52191
GOLD LOG 4_9 FED COM 311H	30-025-52225
GOLD LOG 4_9 FED COM 313H	30-025-52192
GOLD LOG 4_9 FED COM 32H	30-025-52187
GOLD LOG 4_9 FED COM 33H	30-025-52188
GOLD LOG 4_9 FED COM 34H	30-025-52189
GOLD LOG 4_9 FED COM 35H	30-025-52186
GOLD LOG 4_9 FED COM 22H	30-025-53818
GOLD LOG 4_9 FED COM 12H	30-025-53809
GOLD LOG 4_9 FED COM 23H	30-025-53812
GOLD LOG 4_9 FED COM 01H	30-025-53815
GOLD LOG 4_9 FED COM 26H	30-025-53814
GOLD LOG 4_9 FED COM 16H	30-025-53811
GOLD LOG 4_9 FED COM 02H	30-025-53807
GOLD LOG 4_9 FED COM 13H	30-025-53817
GOLD LOG 4_9 FED COM 04H	30-025-53816
GOLD LOG 4_9 FED COM 25H	30-025-53813
GOLD LOG 4_9 FED COM 03H	30-025-53808

Lost Tank 5 CPF Train #2 (F-05-T22S-R32E)
Allocation by well test is approved per PLC 932

LOST TANK 5 CPF TRAIN #2	PLC 932
WELL NAME	API
REGAL LAGER 31 19 FEDERAL COM 34H	30-025-52491
REGAL LAGER 31 19 FEDERAL COM 35H	30-025-52492
REGAL LAGER 31 19 FEDERAL COM 36H	30-025-52493
REGAL LAGER 31 19 FEDERAL COM 31H	30-025-52488
REGAL LAGER 31 19 FEDERAL COM 32H	30-025-52489
REGAL LAGER 31 19 FEDERAL COM 33H	30-025-52490
REGAL LAGER 31 19 FEDERAL COM 71H	30-025-52620
REGAL LAGER 31 19 FEDERAL COM 72H	30-025-52513
REGAL LAGER 31 19 FEDERAL COM 73H	30-025-52514
REGAL LAGER 31 19 FEDERAL COM 74H	30-025-52515

Federal 23-1 Battery (P 23 T22S R31E)
Oil Commingle with Federal 26 Battery, allocation by well test approved per Order CTB 1046
Gas production – wells are in same lease and pool

FEDERAL 23-1 BATTERY	CTB 1046
WELL NAME	API
FEDERAL 23 001	30-015-26377
FEDERAL 23 002	30-015-26932
FEDERAL 23 003	30-015-26400
FEDERAL 23 004	30-015-37336
FEDERAL 23 005	30-015-26681
FEDERAL 23 006	30-015-37340
FEDERAL 23 009	30-015-37334
FEDERAL 23 016	30-015-37341

Federal 23-11 Battery (D 26 T22S R31E)
Oil Commingle with Federal 26 Battery, allocation by well test approved per Order CTB 1046
Gas production – wells are in same lease and pool

FEDERAL 23-11 BATTERY	CTB 1046
WELL NAME	API
FEDERAL 23 007H	30-015-39436
FEDERAL 23 011H	30-015-39437
FEDERAL 23 012H	30-015-41803
FEDERAL 23 013H	30-015-41636

Federal 26 Battery (P 23 T22S R31E)
Oil Commingle with Federal 23-1, 23-11 and 26-1 Batteries, allocation by well test approved per Order CTB 1046
Gas production – gas from Federal 26 004 – 007 wells located at Federal 26-1 Battery (A-26-T22S-R31E) is approved to be sent to gas FMP meter at Federal 26 Battery; wells are in same lease and pool

FEDERAL 26 BATTERY	CTB 1046
WELL NAME	API
FEDERAL 26 12H	30-015-41573
FEDERAL 26 13H	30-015-41600
FEDERAL 26 004	30-015-26866
FEDERAL 26 005	30-015-26854
FEDERAL 26 006	30-015-26940
FEDERAL 26 007	30-015-26941

Cabin Lake 31 Federal 6 Battery (M 31 T21S R32E)
Single well battery, so not a commingle

CABIN LAKE 31 FEDERAL 6 BATTERY	SINGLE WELL BATTERY SO NOT A COMMINGLE			
WELL NAME	API	POOL	POOL CODE	LEASE
CABIN LAKE 31 FED COM 6H	30-025-41088	LOST TANK; DELAWARE	40299	CA NMNM132217

Federal 12-04 Battery (E 12 T22S R31E)
Wells are in same lease and pool, so a Commingle Permit is not required at individual facility

FEDERAL 12-04 BATTERY	WELLS IN SAME LEASE & POOL - NOT A COMMINGLE			
WELL NAME	API	POOL	POOL CODE	LEASE
FEDERAL 12 004	30-015-26859	LIVINGSTON RIDGE; DELAWARE	39360	NMNM029233
FEDERAL 12 005	30-015-26860	LIVINGSTON RIDGE; DELAWARE	39360	
FEDERAL 12 008	30-015-26942	LIVINGSTON RIDGE; DELAWARE	39360	

Federal 1 Battery (K 01 T22S R31E)
Wells are in same lease and pool, so a Commingle Permit is not required at individual facility

FEDERAL 1 BATTERY	WELLS IN SAME LEASE & POOL - NOT A COMMINGLE			
WELL NAME	API	POOL	POOL CODE	LEASE
FEDERAL 1 005	30-015-26909	LOST TANK; DELAWARE	40299	NMNM012845
FEDERAL 1 006	30-015-26910	LOST TANK; DELAWARE	40299	
FEDERAL 1 007	30-015-26988	LOST TANK; DELAWARE	40299	

Federal 12-01 Battery (M 12 T22S R31E)
Wells are in same lease and pool, so a Commingle Permit is not required at individual facility

FEDERAL 12-01 BATTERY	WELLS IN SAME LEASE & POOL - NOT A COMMINGLE			
WELL NAME	API	POOL	POOL CODE	LEASE
FEDERAL 12 002	30-015-26780	LIVINGSTON RIDGE; DELAWARE	39360	NMNM029233
FEDERAL 12 003	30-015-26858	LIVINGSTON RIDGE; DELAWARE	39360	
FEDERAL 12 009	30-015-26971	LIVINGSTON RIDGE; DELAWARE	39360	

Federal 12-14H Battery (P 12 T22S R31E)
Single well battery, so not a commingle

FEDERAL 12-14H BATTERY	SINGLE WELL BATTERY SO NOT A COMMINGLE			
WELL NAME	API	POOL	POOL CODE	LEASE
FEDERAL 12-14H	30-015-40821	WC-015 G-07 S223112P; BONE SPRING	98034	NMNM029233

Federal NEFF 25 Battery (C 25 T22S R31E)
Allocation by well test approved per Order PC 1273

FEDERAL NEFF 25 BATTERY	PC 1273
WELL NAME	API
NEFF 25 FEDERAL 5H	30-015-41031
NEFF 25 FEDERAL 9H	30-015-41459
NEFF FEDERAL 002	30-015-26639

Getty 24 Federal 011 Battery (I 24 T22S R31E)
Single well battery, so not a commingle

GETTY 24 FEDERAL 011 BATTERY	SINGLE WELL BATTERY SO NOT A COMMINGLE			
WELL NAME	API	POOL	POOL CODE	LEASE
GETTY 24 FEDERAL 011	30-015-31162	LIVINGSTON RIDGE; DELAWARE	39360	NMNM025876

Livingston 19 Battery (D 19 T22S R32E)
Wells are in same lease and pool, so a Commingle Permit is not required at individual facility

LIVINGSTON 19 BATTERY	WELLS IN SAME LEASE & POOL - NOT A COMMINGLE			
WELL NAME	API	POOL	POOL CODE	LEASE
LIVINGSTON RIDGE 18 FEDERAL 004	30-025-36012	LIVINGSTON RIDGE; DELAWARE, EAST	39366	NMNM090587
LIVINGSTON RIDGE 18 FEDERAL 006	30-025-36295	LIVINGSTON RIDGE; DELAWARE, EAST	39366	
LIVINGSTON RIDGE 19 FEDERAL 001	30-025-35960	LIVINGSTON RIDGE; DELAWARE, EAST	39366	

Lost Tank 3 Federal 1 Battery (D 03 T22S R31E)
Allocation by well test approved per PC 1404

LOST TANK 3 FEDERAL 1 BATTERY	PC 1404
WELL NAME	API
*LOST TANK 3 FEDERAL 023	30-015-35354
LOST TANK 3 FEDERAL 001	30-015-29638
LOST TANK 3 FEDERAL 002	30-015-29682
LOST TANK 3 FEDERAL 004	30-015-30418

*Oil will be allocated by well test for all wells at the Battery; Lost Tank 3 Federal 023 has a separate individual sales-quality orifice gas meter, and the rest of the wells at Lost Tank Federal 1 Battery share the same sales-quality orifice gas meter

Lost Tank 3 Federal 5 Battery (H 03 T22S R31E)
Allocation by well test approved per Order CTB 1075

LOST TANK 3 FEDERAL 5 BATTERY	CTB 1075
WELL NAME	API
LOST TANK 10 FEDERAL 001	30-015-37959
LOST TANK 10 FEDERAL 002	30-015-37960
LOST TANK 10 FEDERAL 003	30-015-37897
LOST TANK 10 FEDERAL 004	30-015-37961
LOST TANK 10 FEDERAL 005	30-015-37924
LOST TANK 11 FEDERAL 001	30-015-37962
LOST TANK 3 FEDERAL 005	30-015-30586
LOST TANK 3 FEDERAL 006	30-015-31887
LOST TANK 3 FEDERAL 007	30-015-32167
LOST TANK 3 FEDERAL 008	30-015-32168
LOST TANK 3 FEDERAL 009	30-015-32169
LOST TANK 3 FEDERAL 010	30-015-32345
LOST TANK 3 FEDERAL 011	30-015-32725
LOST TANK 3 FEDERAL 012	30-015-32726
LOST TANK 3 FEDERAL 013	30-015-37950
LOST TANK 3 FEDERAL 014	30-015-37918
LOST TANK 3 FEDERAL 015	30-015-37951
LOST TANK 3 FEDERAL 016	30-015-37907
LOST TANK 3 FEDERAL 018	30-015-37908
LOST TANK 3 FEDERAL 019	30-015-37952
LOST TANK 3 FEDERAL 020	30-015-37919
LOST TANK 3 FEDERAL 021	30-015-37920

Lost Tank 4 Federal 1 Battery (C 04 T22S R31E)
Allocation by well test approved per PLC 930

LOST TANK 4 FEDERAL 1 BATTERY	PLC 930
WELL NAME	**API**
*LOST TANK 4 FEDERAL 020	30-015-34918
*LOST TANK 4 FEDERAL 023	30-015-40775
LOST TANK 4 FEDERAL 001	30-015-28727
LOST TANK 4 FEDERAL 002	30-015-29611
LOST TANK 4 FEDERAL 003	30-015-29617
LOST TANK 4 FEDERAL 005	30-015-29732
LOST TANK 4 FEDERAL 006	30-015-29733
LOST TANK 4 FEDERAL 007	30-015-30414
LOST TANK 4 FEDERAL 008	30-015-37923
LOST TANK 4 FEDERAL 011	30-015-37954
LOST TANK 4 FEDERAL 012	30-015-37955
LOST TANK 4 FEDERAL 013	30-015-37956
LOST TANK 4 FEDERAL 015	30-015-37894
LOST TANK 4 FEDERAL 016	30-015-37957
LOST TANK 4 FEDERAL 017	30-015-37958
LOST TANK 4 FEDERAL 018	30-015-37895
LOST TANK 4 FEDERAL 019	30-015-37896

*Oil will be allocated by well test for all wells at the Battery; Lost Tank 4 Federal 020 and 023 each have a separate individual sales-quality orifice gas meter, and the rest of the wells at Lost Tank 4 Federal 1 Battery share the same sales-quality orifice gas meter

Lost Tank 33 Federal 4 Battery (P 33 T21S R31E)
Wells are in same lease and pool, so a Commingle Permit is not required at individual facility

LOST TANK 33 FEDERAL 4 BATTERY	WELLS IN SAME LEASE & POOL - NOT A COMMINGLE			
WELL NAME	**API**	**POOL**	**POOL CODE**	**LEASE**
LOST TANK 33 FEDERAL 004	30-015-29338	LOST TANK; DELAWARE, WEST	96582	NMNM096231
LOST TANK 33 FEDERAL 007	30-015-29468	LOST TANK; DELAWARE, WEST	96582	
LOST TANK 33 FEDERAL 008	30-015-29381	LOST TANK; DELAWARE, WEST	96582	
LOST TANK 33 FEDERAL 009	30-015-29382	LOST TANK; DELAWARE, WEST	96582	
LOST TANK 33 FEDERAL 010	30-015-29744	LOST TANK; DELAWARE, WEST	96582	
LOST TANK 33 FEDERAL 012	30-015-29678	LOST TANK; DELAWARE, WEST	96582	
LOST TANK 33 FEDERAL 015	30-015-29681	LOST TANK; DELAWARE, WEST	96582	

Lost Tank 35 State 4 Battery (M 35 T21S R31E)
Wells are in same lease and pool, so a Commingle Permit is not required at individual facility

LOST TANK 35 STATE 4 BATTERY	WELLS IN SAME LEASE & POOL - NOT A COMMINGLE			
WELL NAME	API	POOL	POOL CODE	LEASE
LOST TANK 35 STATE 001	30-015-31361	LOST TANK; DELAWARE	40299	V036042
LOST TANK 35 STATE 002	30-015-32354	LOST TANK; DELAWARE	40299	
LOST TANK 35 STATE 003	30-015-31608	LOST TANK; DELAWARE	40299	
LOST TANK 35 STATE 004	30-015-31275	LOST TANK; DELAWARE	40299	
LOST TANK 35 STATE 007	30-015-31640	LOST TANK; DELAWARE	40299	
LOST TANK 35 STATE 008	30-015-31641	LOST TANK; DELAWARE	40299	
LOST TANK 35 STATE 009	30-015-32511	LOST TANK; DELAWARE	40299	
LOST TANK 35 STATE 010	30-015-32512	LOST TANK; DELAWARE	40299	
LOST TANK 35 STATE 011	30-015-32240	LOST TANK; DELAWARE	40299	
LOST TANK 35 STATE 012	30-015-31851	LOST TANK; DELAWARE	40299	
LOST TANK 35 STATE 013	30-015-33445	LOST TANK; DELAWARE	40299	
LOST TANK 35 STATE 014	30-015-33434	LOST TANK; DELAWARE	40299	
LOST TANK 35 STATE 016	30-015-31926	LOST TANK; DELAWARE	40299	

Mills 19-01 Battery (E 19 T22S R32E)
Single well battery, so not a commingle

MILLS 19-01 BATTERY	SINGLE WELL BATTERY SO NOT A COMMINGLE			
WELL NAME	API	POOL	POOL CODE	LEASE
MILLS 19 001	30-025-35918	LIVINGSTON RIDGE; DELAWARE, EAST	39366	FEE

Proximity 30-3 Battery (F 30 T22S R32E)
Single well battery, so not a commingle

PROXIMITY 30 FEDERAL 3 BATTERY	SINGLE WELL BATTERY SO NOT A COMMINGLE			
WELL NAME	API	POOL	POOL CODE	LEASE
PROXIMITY 30 FEDERAL 3	30-025-37184	LIVINGSTON RIDGE; DELAWARE, EAST	39366	NMNM106915

State 2-3 Battery (I 02 T22S R31E)
Wells are in same lease and pool, so a Commingle Permit is not required at individual facility

STATE 2-3 BATTERY	WELLS IN SAME LEASE & POOL - NOT A COMMINGLE			
WELL NAME	API	POOL	POOL CODE	LEASE
STATE 2 004	30-015-28456	LOST TANK; DELAWARE	40299	LH15231
STATE 2 001	30-015-26894	LOST TANK; DELAWARE	40299	
STATE 2 002	30-015-28416	LOST TANK; DELAWARE	40299	

Loper 34 State Battery (E-34-21S-31E)
Allocation by well test approved per CTB 1129

LOPER 34 STATE BATTERY	CTB 1129
WELL NAME	API
JACQUE AQJ STATE 003	30-015-30635
LOPER 34 STATE 001	30-015-29988

*Jacque well will be added once OXY has taken over ownership

Additional Application Components:

Any commingling of wells upstream of these meters is per allocation by well test to each individual well and has been approved according to the Commingle Orders for each individual facility.

For Cabin Lake 31 Federal 6 Battery, Federal 12-04 Battery, Federal 1 Battery, Federal 12-01 Battery, Federal 12-14H Battery, Getty 24 Federal 011 Battery, Livingston 19 Battery, Lost Tank 33 Federal 4 Battery, Lost Tank 35 State 4 Battery, Mills 19-01 Battery, Proximity 30-3 battery and State 2-3 Battery, where all wells are within the same pool/lease or it is a single well battery so a commingle permit is not required, the battery gas meter is dedicated to a single pool and lease.

A map detailing the lease boundary and facility locations is attached.

The gas meters will be calibrated on a regular basis per API, NMOCD and BLM specifications.

Pursuant to Statewide rule 19.15.12.10(C)(4)(g) OXY USA INC requests the option to include additional pools or leases within the defined parameters set forth in the Order for future additions.

Commingling will not reduce the individual wells' production value or otherwise adversely affect the interest owners. It is the most effective means of producing the reserves.

The surface commingle application will be submitted separately for approval per NMOCD, SLO and BLM regulations.

OXY USA INC understands the requested approval will not constitute the granting of any right-of-way or construction rights not granted by the lease instrument.

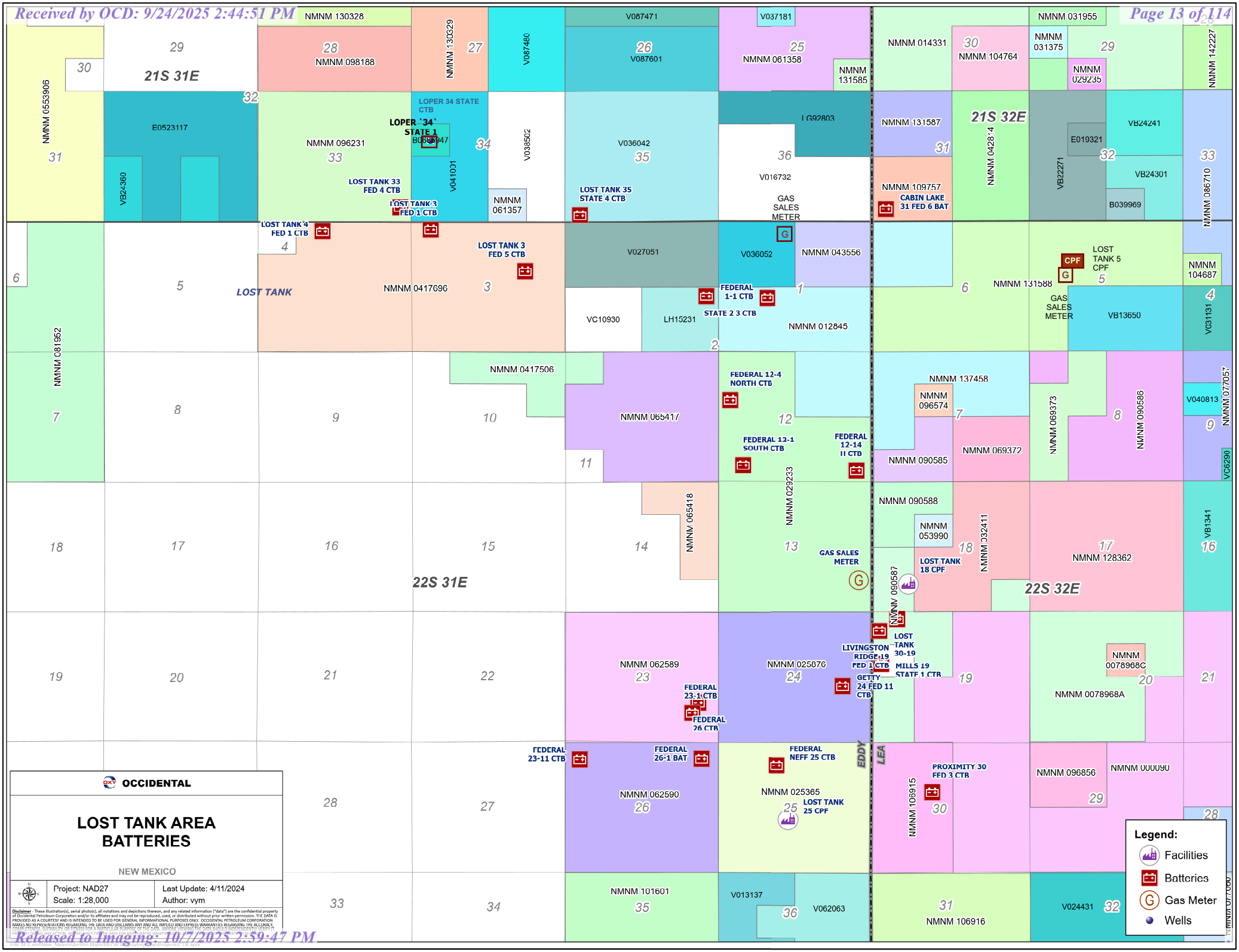

OCCIDENTAL

LOST TANK AREA BATTERIES

NEW MEXICO

Project: NAD27
Scale: 1:28,000
Last Update: 4/11/2024
Author: vym

Disclaimer - These illustration(s), aerial photo(s), all notations and depictions thereon, and any related information ("data") are the confidential property of Occidental Petroleum Corporation and/or its affiliates and may not be reproduced, used, or distributed without prior written permission. THE DATA IS PROVIDED AS A COURTESY AND IS INTENDED TO BE USED FOR GENERAL INFORMATIONAL PURPOSES ONLY. OCCIDENTAL PETROLEUM CORPORATION MAKES NO REPRESENTATIONS REGARDING THE USAGE AND DISCLAIMS ANY AND ALL IMPLIED AND EXPRESS WARRANTIES REGARDING THE ACCURACY, COMPLETENESS, CONSTITUTE OR OMISSIONS THEREIN, OR THE RIGHTS OF THIRD PARTIES THEREIN. IN NO EVENT SHALL OCCIDENTAL PETROLEUM CORPORATION BE LIABLE FOR ANY DIRECT, INDIRECT, SPECIAL, INCIDENTAL, OR CONSEQUENTIAL DAMAGES ARISING OUT OF OR IN CONNECTION WITH THE USE OF THE DATA.

File: N:\Lockhart_Maves\Andro Mans\Bell Fed 13 Battery\Andro\BELL FED 13.aprx

GAS COMMINGLE FOR LOST TANK AREA
FACILITY DIAGRAM

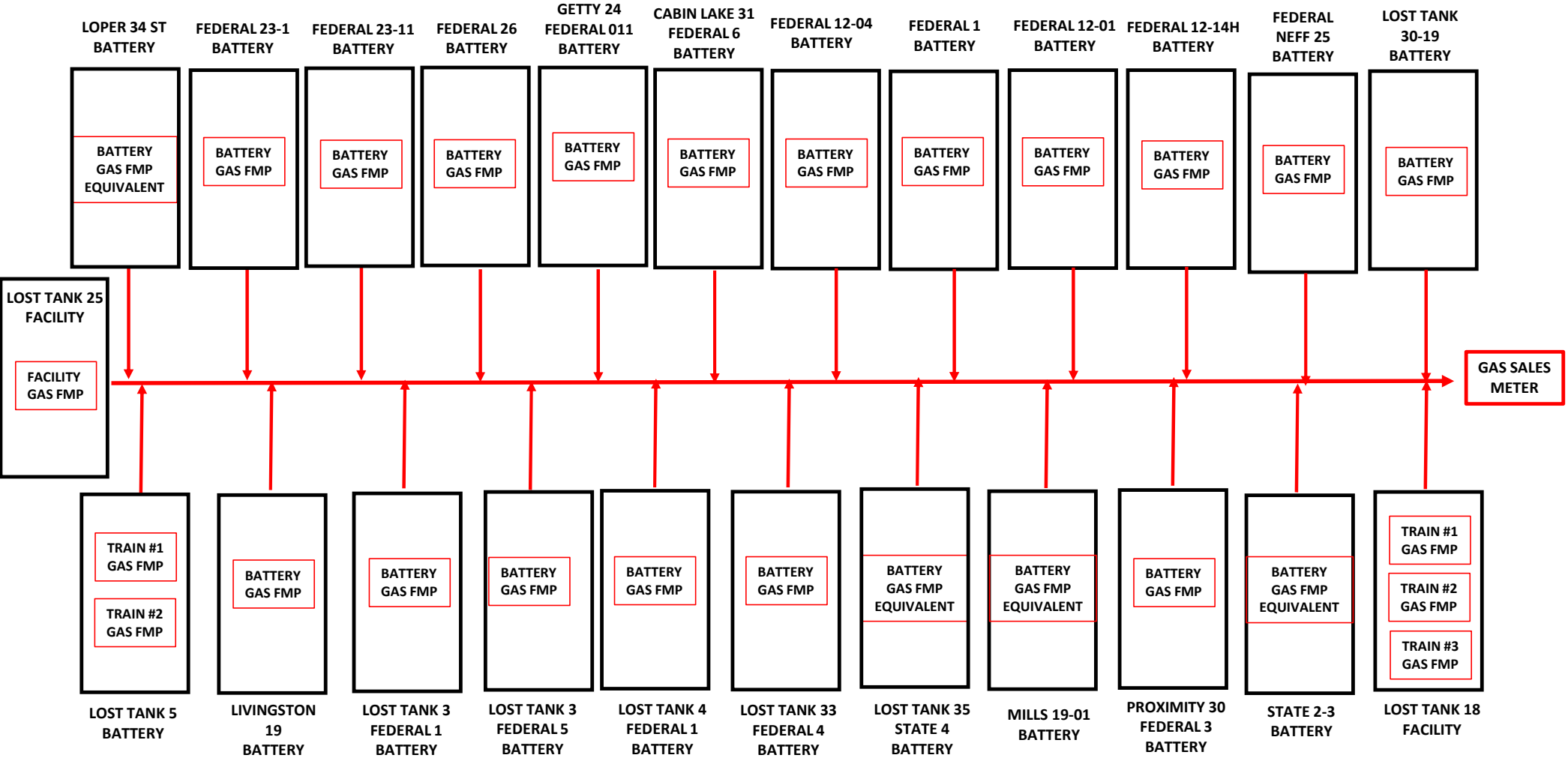

LOST TANK 25 CPF

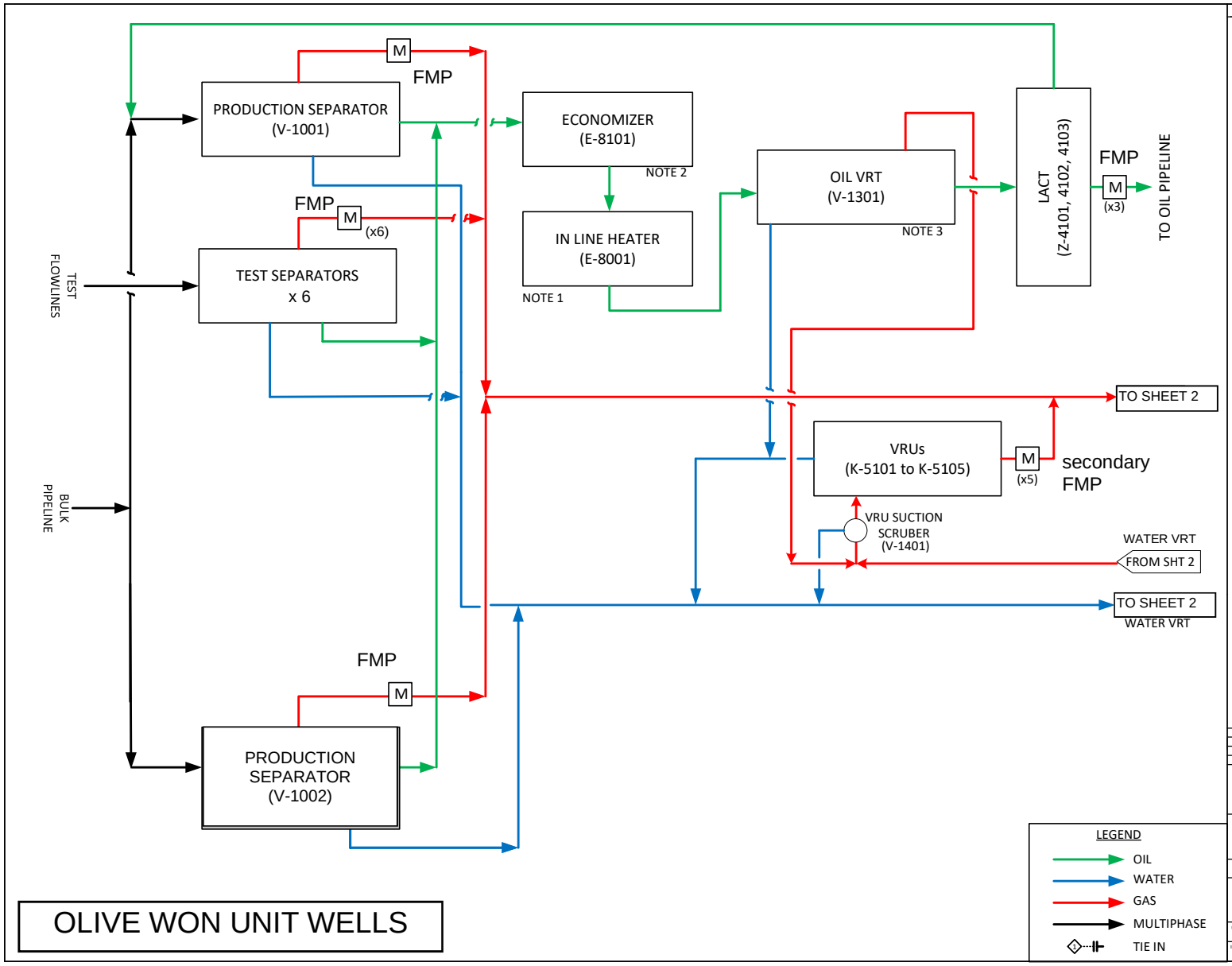

NOTES

1. FOR SIMPLICITY, THE HEAT MEDIA SYSTEM FOR THIS UNIT IS NOT DEPICTED
2. FOR SIMPLICITY, OIL EXITING VRT OUTLET BACK THRU ECONOMIZER THAT IS USED TO PREHEAT UNSTABILIZED OIL IS NOT SHOWN.
3. FOR SIMPLICITY, OIL RECYCLED FROM VRT OUTLET BACK TO INLET OF VRT, FOR PUMP RATE STABLIZATION IS NOT SHOWN.

Oxy USA Inc
PERMIAN RESOURCES

LOST TANK 25 CPF

BLOCK FLOW DIAGRAM

UNIT NAME & UNIT NUMBER | JOB NUMBER | SHT. No. 1 OF 3
INDEX | DRAWING NUMBER | REV A

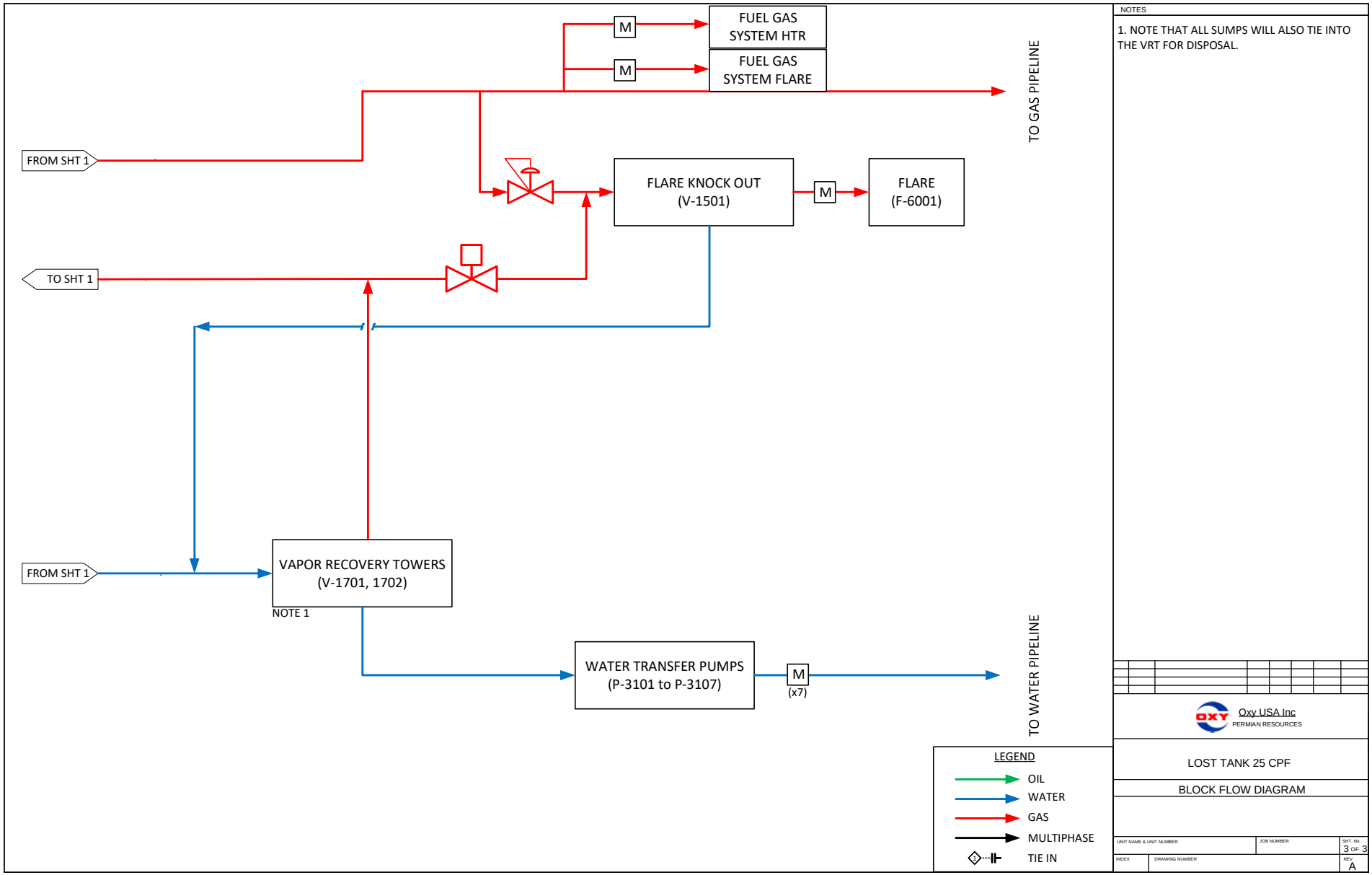
FUEL GAS SYSTEM HTR
FUEL GAS SYSTEM FLARE
M
M
TO GAS PIPELINE
FROM SHT 1
FLARE KNOCK OUT (V-1501)
M
FLARE (F-6001)
TO SHT 1
FROM SHT 1
VAPOR RECOVERY TOWERS (V-1701, 1702)
NOTE 1
WATER TRANSFER PUMPS (P-3101 to P-3107)
M
(x7)
TO WATER PIPELINE
LEGEND
OIL
WATER
GAS
MULTIPHASE
TIE IN
NOTES
1. NOTE THAT ALL SUMPS WILL ALSO TIE INTO THE VRT FOR DISPOSAL.
Oxy USA Inc
PERMIAN RESOURCES
LOST TANK 25 CPF
BLOCK FLOW DIAGRAM
UNIT NAME & UNIT NUMBER
JOB NUMBER
SHT. No.
3 OF 3
INDEX
DRAWING NUMBER
REV
A

LOST TANK 18 FACILITY
TRAINS 1, 2 & 3

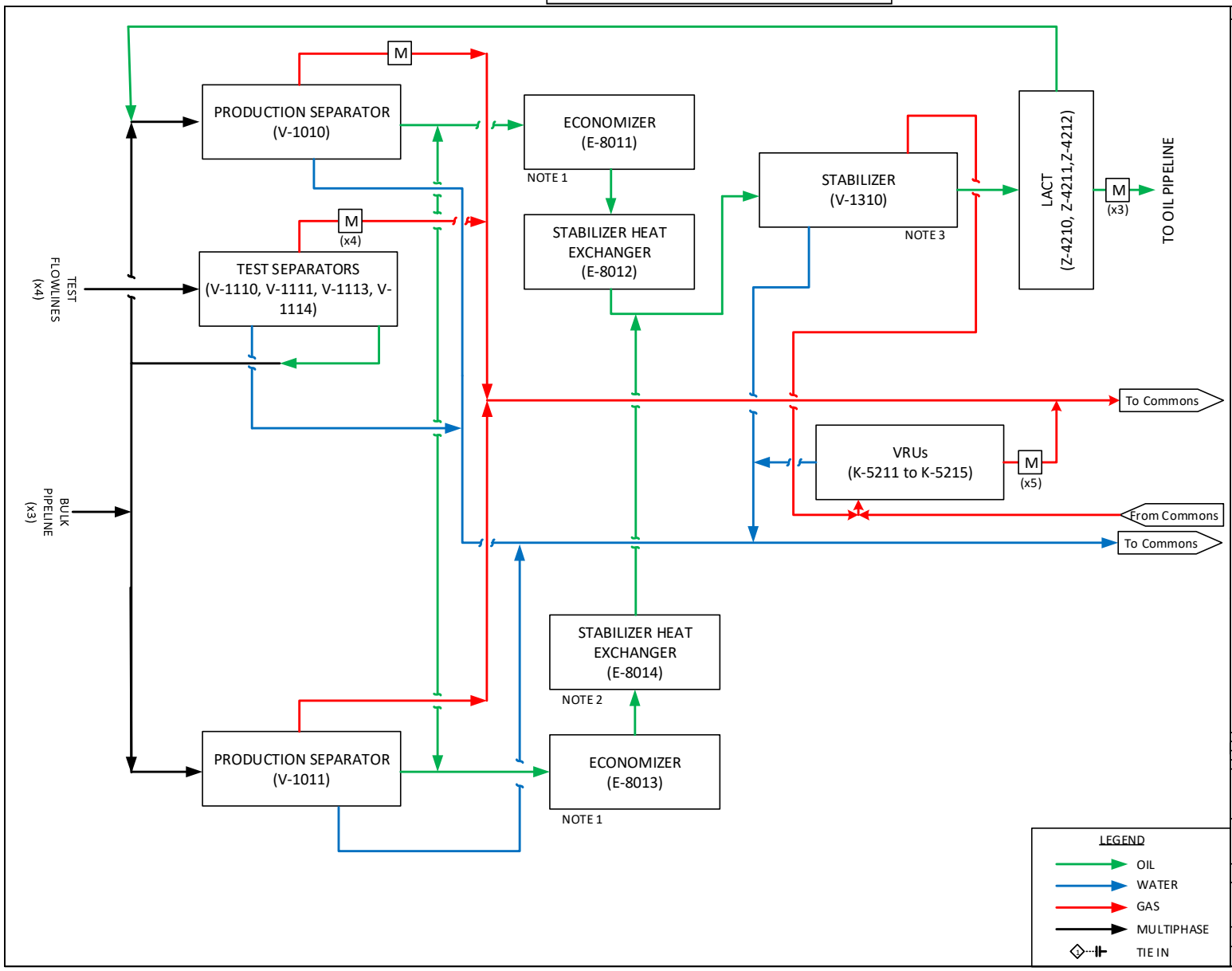

NOTES

1. FOR SIMPLICITY, OIL FROM THE STABILIZER THAT IS USED AS THE HEAT MEDIA IN THIS SYSTEM IS NOT SHOWN.

2. FOR SIMPLICITY, THE HEAT MEDIA SYSTEM FOR THIS UNIT IS NOT DEPICTED.

3. FOR SIMPLICITY, OIL FROM THE STABILZER THAT IS USED TO PREHEAT UNSTABILIZED OIL IS NOT SHOWN.

Oxy USA Inc
PERMIAN RESOURCES

LOST TANK 18 CTB

BLOCK FLOW DIAGRAM

UNIT NAME & UNIT NUMBER | JOB NUMBER | SHT. No 1 OF 3
INDEX | DRAWING NUMBER | REV A

Train #1: Dr Pi wells

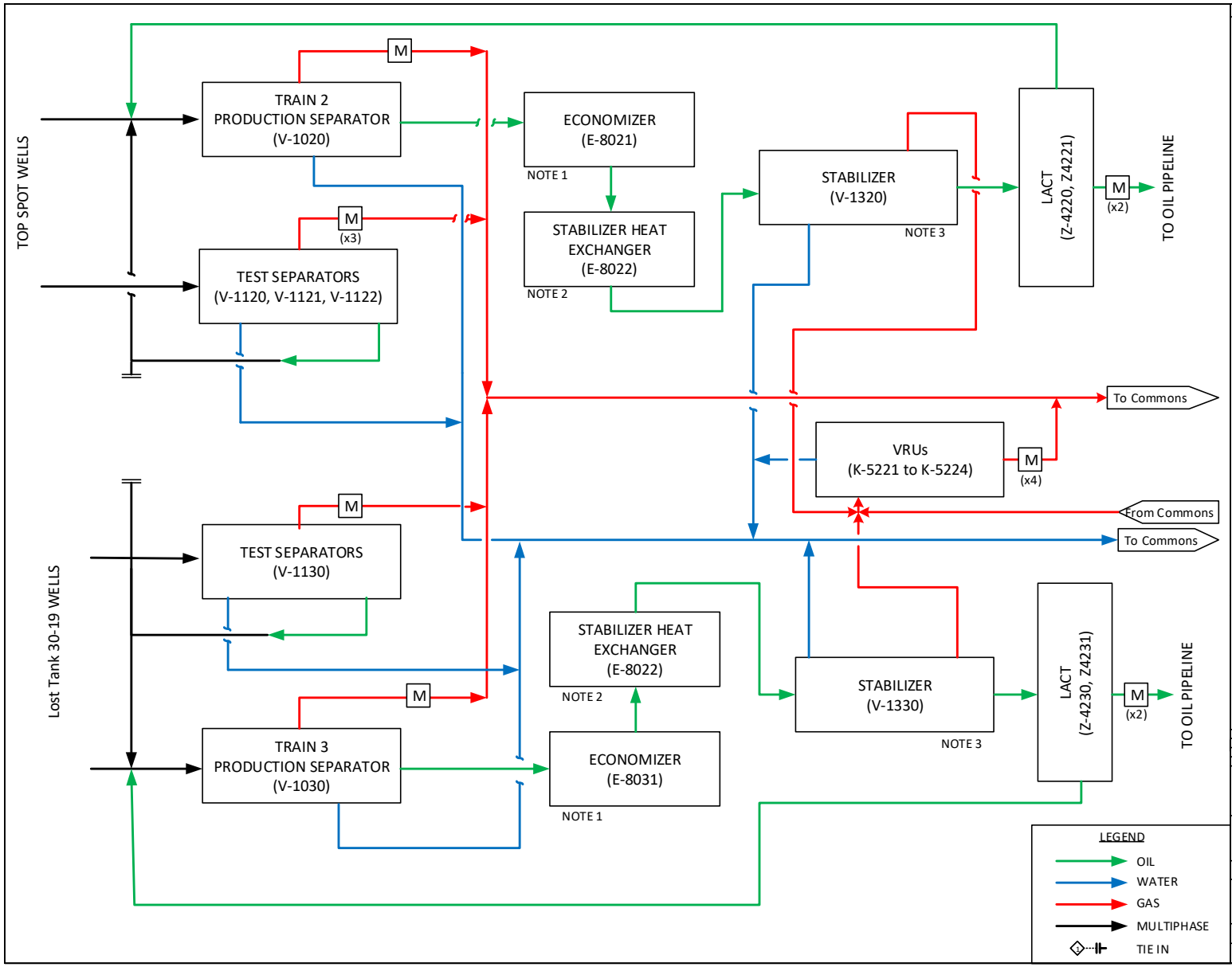

NOTES

1. FOR SIMPLICITY, OIL FROM THE STABILIZER THAT IS USED AS THE HEAT MEDIA IN THIS SYSTEM IS NOT SHOWN.

2. FOR SIMPLICITY, THE HEAT MEDIA SYSTEM FOR THIS UNIT IS NOT DEPICTED.

3. FOR SIMPLICITY, OIL FROM THE STABILZER THAT IS USED TO PREHEAT UNSTABILIZED OIL IS NOT SHOWN.

4. TRAIN 4 WILL BE BUILT ON THE SAME BACKBONE AS TRAIN 3. THE PRODUCTION SEPARATOR FOR TRAIN 4 WILL TEMPORARILY BE USED FOR TRAIN 3 WHILE THE FACILITY IS GOING THROUGH PEAK. THIS BREAKOUT SPOOL WILL BE REMOVED AND FLANGES TO PREVENT COMINGLING CONCERNS.

Oxy USA Inc
PERMIAN RESOURCES

LOST TANK 18 CTB

BLOCK FLOW DIAGRAM

UNIT NAME & UNIT NUMBER | JOB NUMBER | SHT. No 1 OF 3
INDEX | DRAWING NUMBER | REV A

Train #2: Top Spot wells Train #3, Lost Tank 30-19 wells

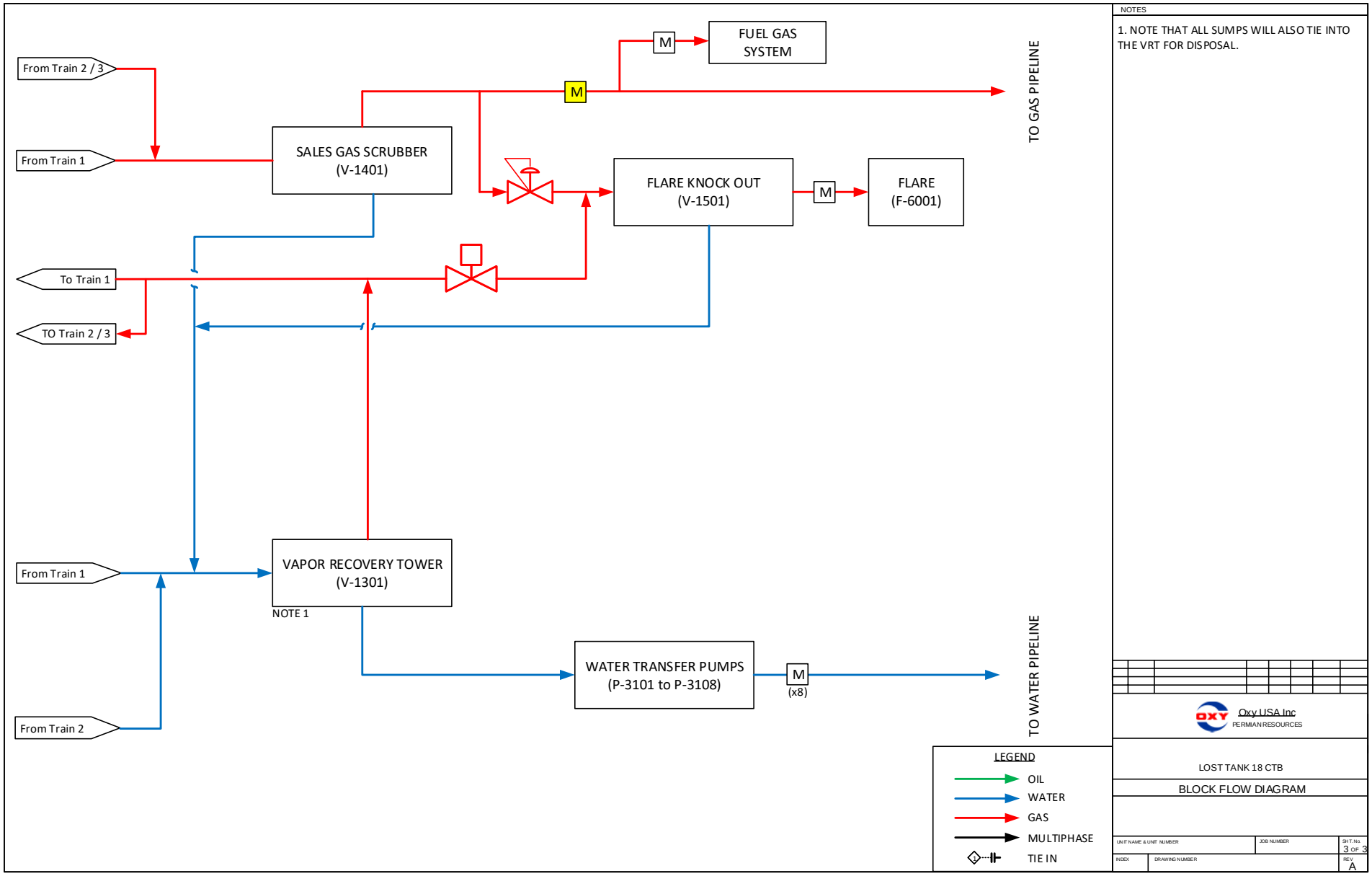
From Train 2 / 3
From Train 1
SALES GAS SCRUBBER
(V-1401)
M
FUEL GAS
SYSTEM
M
TO GAS PIPELINE
FLARE KNOCK OUT
(V-1501)
M
FLARE
(F-6001)
To Train 1
TO Train 2 / 3
From Train 1
VAPOR RECOVERY TOWER
(V-1301)
NOTE 1
WATER TRANSFER PUMPS
(P-3101 to P-3108)
M
(x8)
TO WATER PIPELINE
From Train 2
LEGEND
OIL
WATER
GAS
MULTIPHASE
TIE IN
NOTES
1. NOTE THAT ALL SUMPS WILL ALSO TIE INTO THE VRT FOR DISPOSAL.
Oxy USA Inc
PERMIAN RESOURCES
LOST TANK 18 CTB
BLOCK FLOW DIAGRAM
UNIT NAME & UNIT NUMBER
JOB NUMBER
SHT. No
3 OF 3
INDEX
DRAWING NUMBER
REV
A

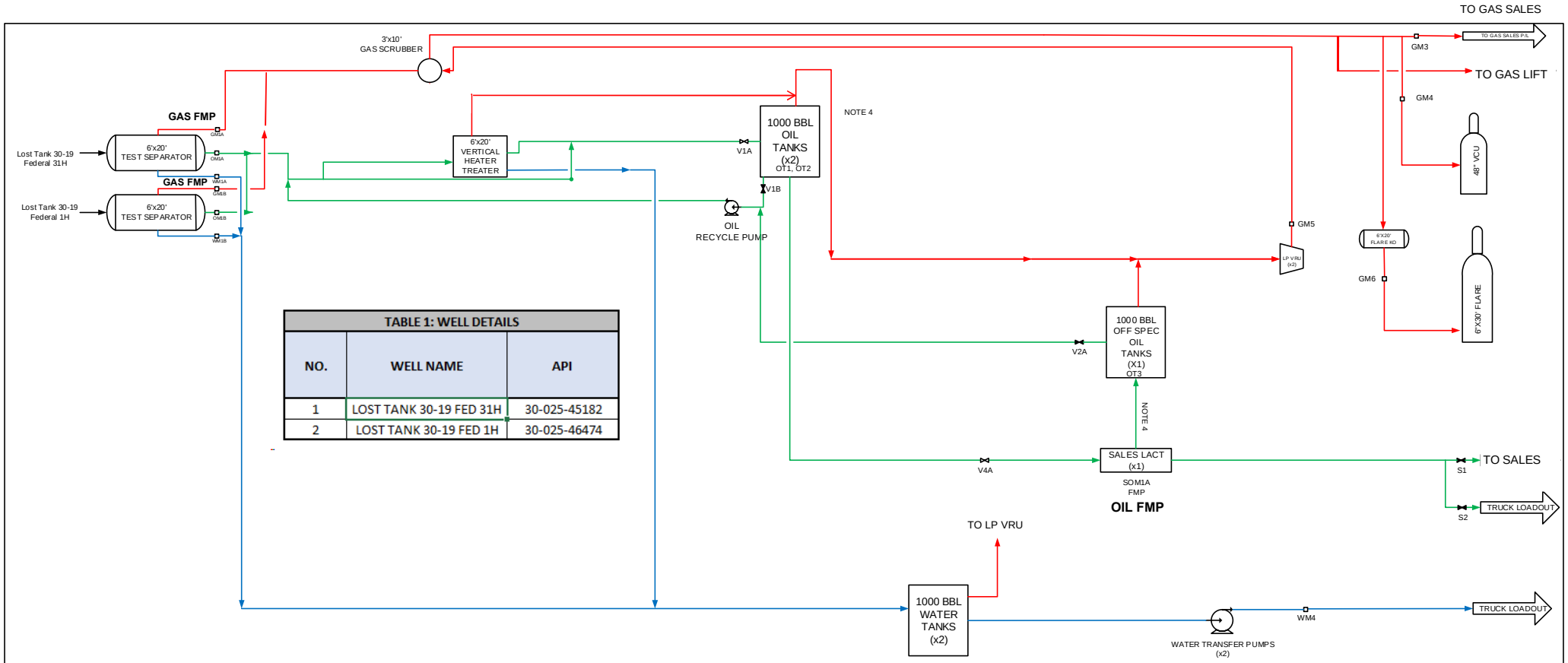

TABLE 1: WELL DETAILS		
NO.	WELL NAME	API
1	LOST TANK 30-19 FED 31H	30-025-45182
2	LOST TANK 30-19 FED 1H	30-025-46474

LOST TANK 30-19 BATTERY
NMNM090587
D-19-T22S R32E
LEA CO, NM

NOTES:
1. VTA= VENT TO ATMOSPHERE
2. LACT= LEASE AUTOMATED CUSTODY TRANSFER
4. BAD OIL DIVERT LINE BACK TO SAME ROYALTY OIL STORAGE TANKS
5. EQUIPMENT NOT INCLUDED ON BFD INCLUDES CONTAINMENT SUMP/PUMP AND INSTRUMENT AIR SYSTEM

LEGEND
WATER:
OIL:
GAS:
MIX:
RECYCLE:

REV.	DESCRIPTION	DATE	BY
-	-	-	-
-	-	-	-
-	-	-	-
-	-	-	-
-	-	-	-
0	IFC- NO METER ID'S	06/11/18	BP

AREA: NEW MEXICO
FACILITY: LOST TANK 30 19 BATTERY TYPE: CTB ONEOXY: 1217638
DWG TYPE: BLOCK FLOW DIAGRAM
DESCRIPTION: PROCESS BLOCK FLOW DIAGRAM

OXY USA INC.- Permian Resources
(Operator)

ASSET	FACILITY	ENG DISC	NUMBER	SHEET
PER	30015BT0865	PRO	00001	001

TRAIN 1 - GOLD LOG

SHEET 1

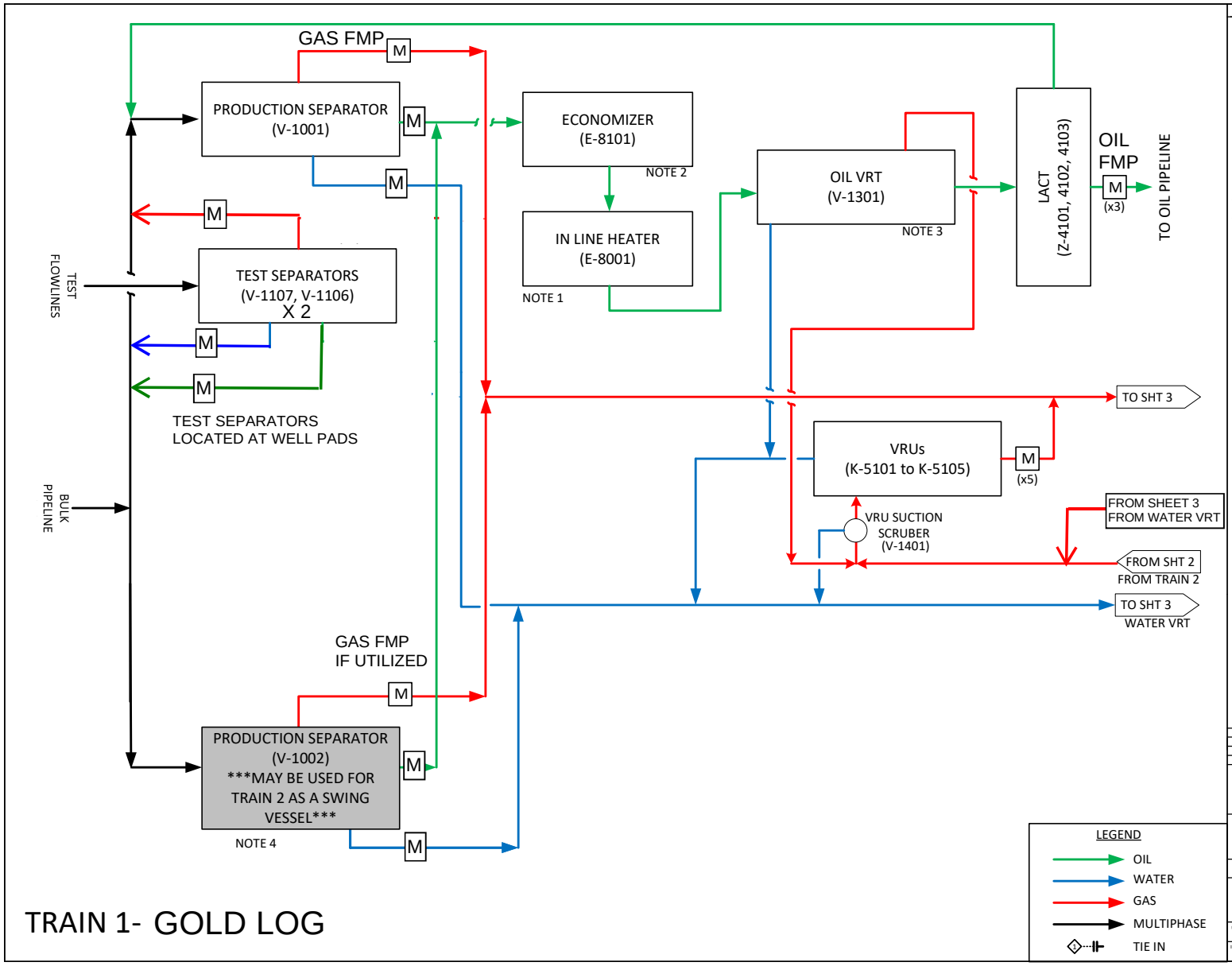

NOTES

1. FOR SIMPLICITY, THE HEAT MEDIA SYSTEM FOR THIS UNIT IS NOT DEPICTED
2. FOR SIMPLICITY, OIL EXITING VRT OUTLET BACK THRU ECONOMIZER THAT IS USED TO PREHEAT UNSTABILIZED OIL IS NOT SHOWN.
3. FOR SIMPLICITY, OIL RECYCLED FROM VRT OUTLET BACK TO INLET OF VRT, FOR PUMP RATE STABLIZATION IS NOT SHOWN.
4. THIS PRODUCTION VESSEL MAY BE USED AS A SWING VESSEL THAT WOULD BE DISCONNECTED AND RECONNECTED TO TRAIN 1 OR 2 TO HANDLE INCREASED PRODUCTION SINCE THE CAMPAIGNS HAVE TIMING SEPARATION (TO CONSERVE CAPITAL)

Oxy USA Inc
PERMIAN RESOURCES

LOST TANK 5 CPF

BLOCK FLOW DIAGRAM

UNIT NAME & UNIT NUMBER | JOB NUMBER | SHT. No. 1 OF 3

INDEX | DRAWING NUMBER | REV A

TRAIN 1- GOLD LOG

TRAIN 2 - REGAL LAGER

SHEET 2

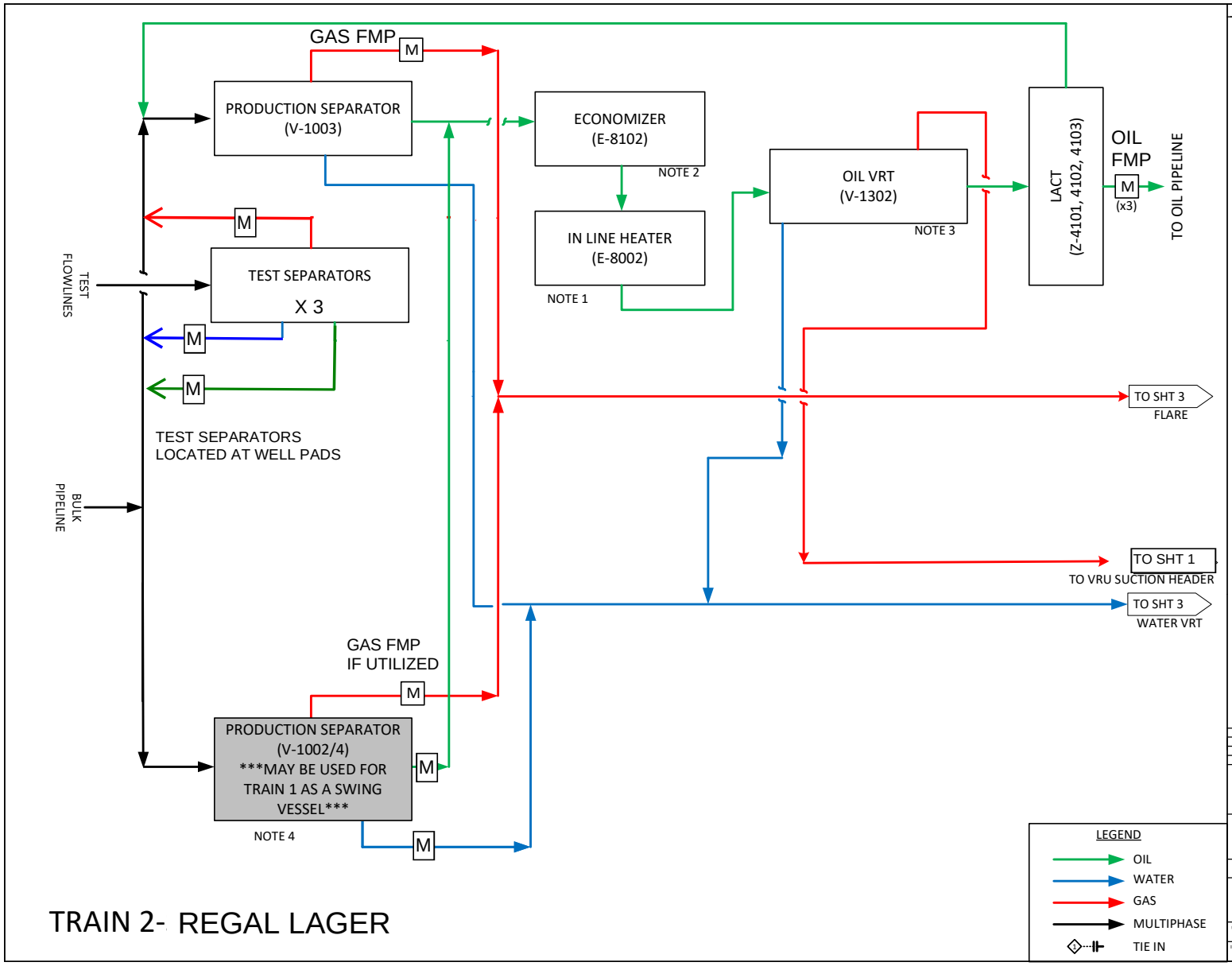

TRAIN 2- REGAL LAGER

NOTES

1. FOR SIMPLICITY, THE HEAT MEDIA SYSTEM FOR THIS UNIT IS NOT DEPICTED
2. FOR SIMPLICITY, OIL EXITING VRT OUTLET BACK THRU ECONOMIZER THAT IS USED TO PREHEAT UNSTABILIZED OIL IS NOT SHOWN.
3. FOR SIMPLICITY, OIL RECYCLED FROM VRT OUTLET BACK TO INLET OF VRT, FOR PUMP RATE STABLIZATION IS NOT SHOWN.
4. THIS PRODUCTION VESSEL MAY BE USED AS A SWING VESSEL THAT WOULD BE DISCONNECTED AND RECONNECTED TO TRAIN 1 OR 2 TO HANDLE INCREASED PRODUCTION SINCE THE CAMPAIGNS HAVE TIMING SEPARATION (TO CONSERVE CAPITAL)

Oxy USA Inc
PERMIAN RESOURCES

LOST TANK 5 CPF

BLOCK FLOW DIAGRAM

UNIT NAME & UNIT NUMBER | JOB NUMBER | SHT. No. 2 OF 3

INDEX | DRAWING NUMBER | REV A

SHEET 3

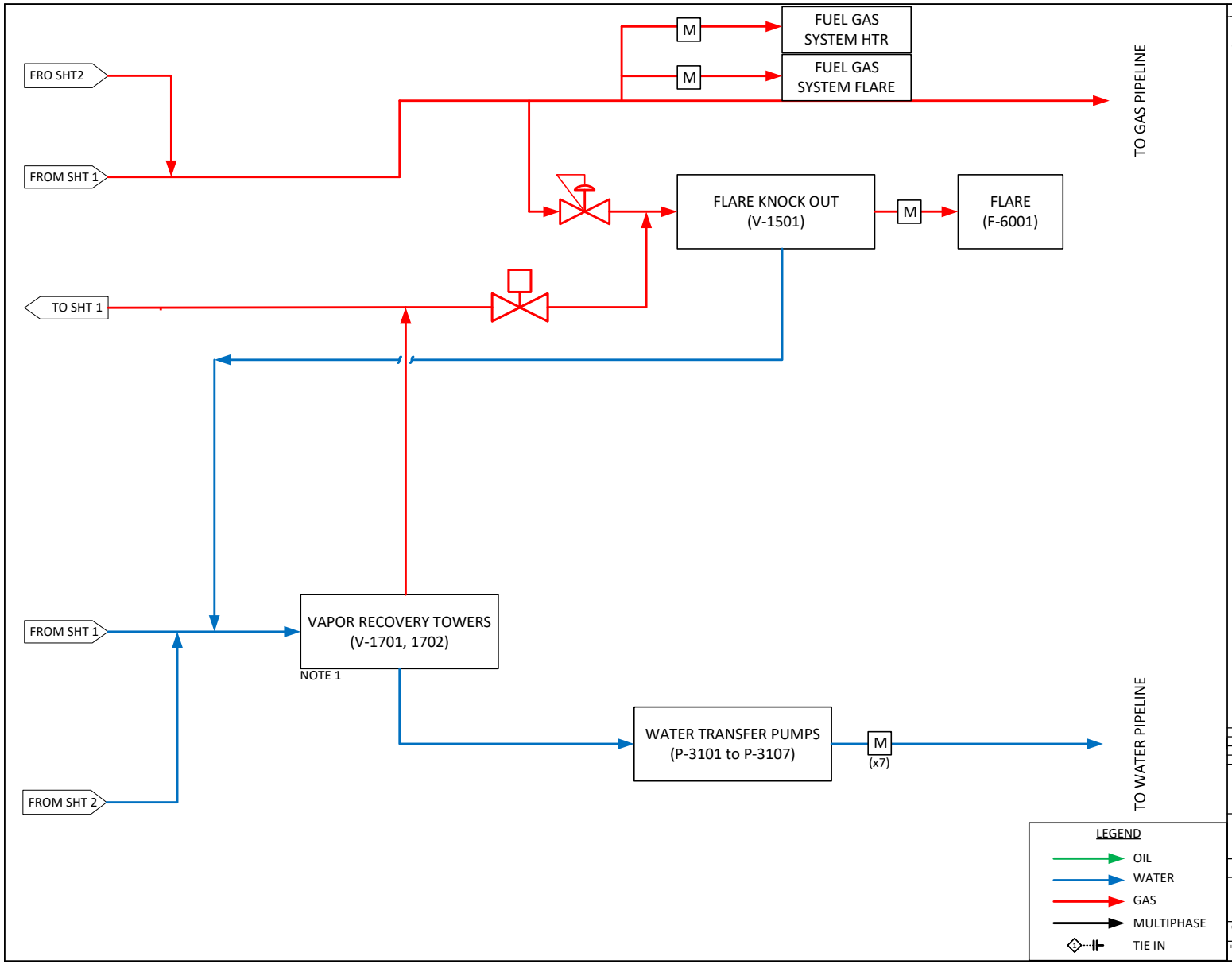

NOTES

1. NOTE THAT ALL SUMPS WILL ALSO TIE INTO THE VRT FOR DISPOSAL.

Oxy USA Inc
PERMIAN RESOURCES

LOST TANK 5 CPF

BLOCK FLOW DIAGRAM

UNIT NAME & UNIT NUMBER | JOB NUMBER | SHT. No. 3 OF 3

INDEX | DRAWING NUMBER | REV A

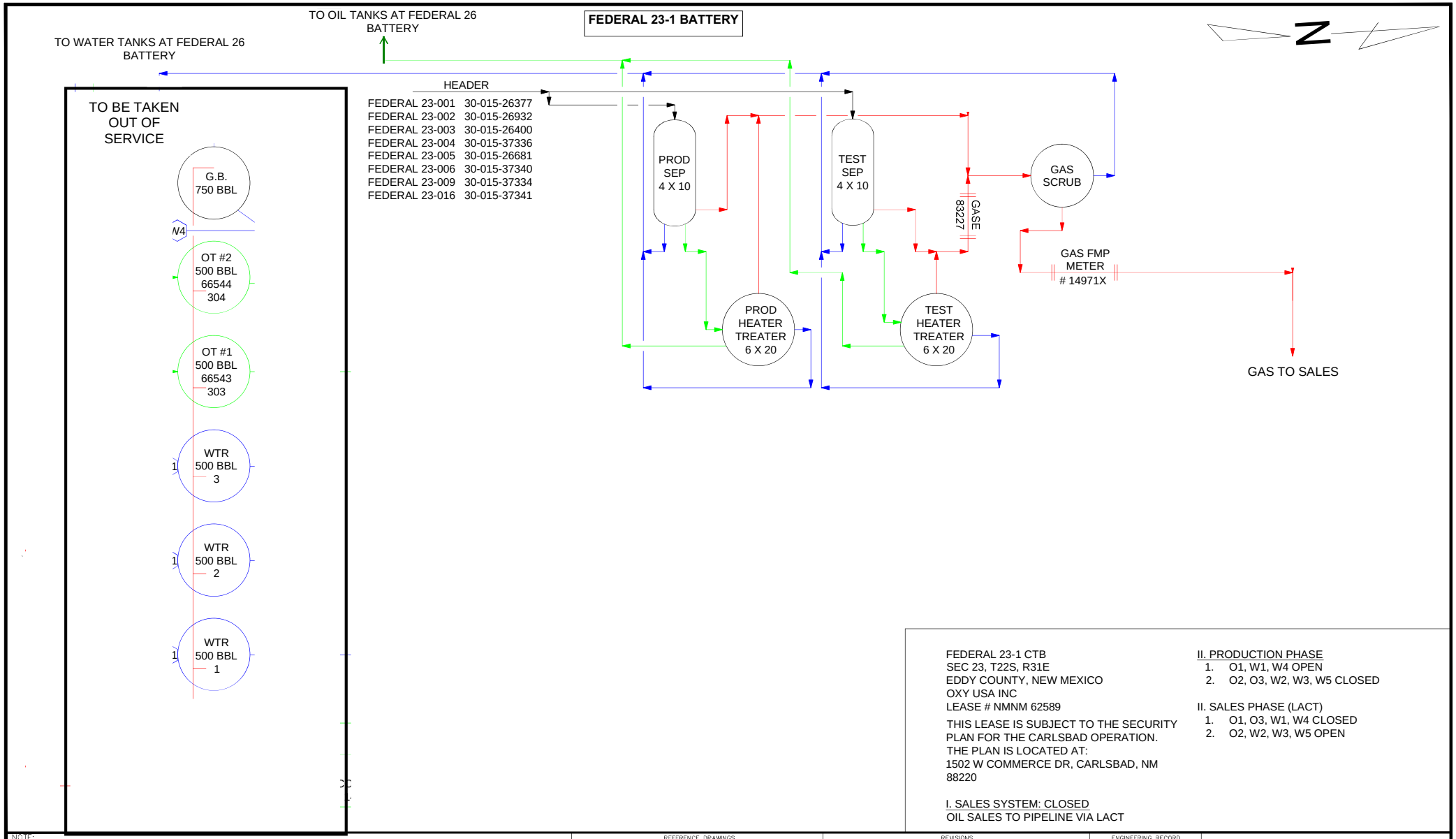

FEDERAL 23-1 CTB
SEC 23, T22S, R31E
EDDY COUNTY, NEW MEXICO
OXY USA INC
LEASE # NMNM 62589

THIS LEASE IS SUBJECT TO THE SECURITY PLAN FOR THE CARLSBAD OPERATION. THE PLAN IS LOCATED AT:
1502 W COMMERCE DR, CARLSBAD, NM 88220

I. SALES SYSTEM: CLOSED
OIL SALES TO PIPELINE VIA LACT

II. PRODUCTION PHASE
1. O1, W1, W4 OPEN
2. O2, O3, W2, W3, W5 CLOSED

II. SALES PHASE (LACT)
1. O1, O3, W1, W4 CLOSED
2. O2, W2, W3, W5 OPEN

NOTE:

REFERENCE DRAWINGS	
NO.	TITLE

REVISIONS					
NO.	DATE	DESCRIPTION	BY	CHK.	APP.
A	1-31-19	ISSUED FOR REVIEW	SHW	SM	

ENGINEERING RECORD		
	BY	DATE
DRN:	SHW	1-31-19
DES:		
CHK:		
APP:		
AFE No.		
OXY ENGR.		
PROJ. ENGR:	S. MUSALLA	
SCALE:	NONE	

Oxy USA INC
A subsidiary of Occidental Petroleum Corporation

SITE FACILITY DIAGRAM
FEDERAL 23-1 CTB
EDDY COUNTY, NEW MEXICO

PLOT SCALE
CAD NO.
DWG. NO. 001
REV A

S:\allsites\Primary F&C Folder\DESIGN AND DRAFTING\STD ENGINEERING INFORMATION\REGULATORY\TEMP FILE-STILLMAN\SEPARATED BY WEEK\WEEKFEDERAL 23-1 CTB.dwg20190204-15505411

File Path S:\allsites\Primary F&C Folder\DESIGN AND DRAFTING\STD ENGINEERING INFORMATION\REGULATORY\TEMP FILE-STILLMAN\SEPARATED BY WEEK\WEEK 7\FEDERAL 23-1 CTB.dwg Saved by: WHITAKS on: Feb. 4, 19 - 3:28 PM

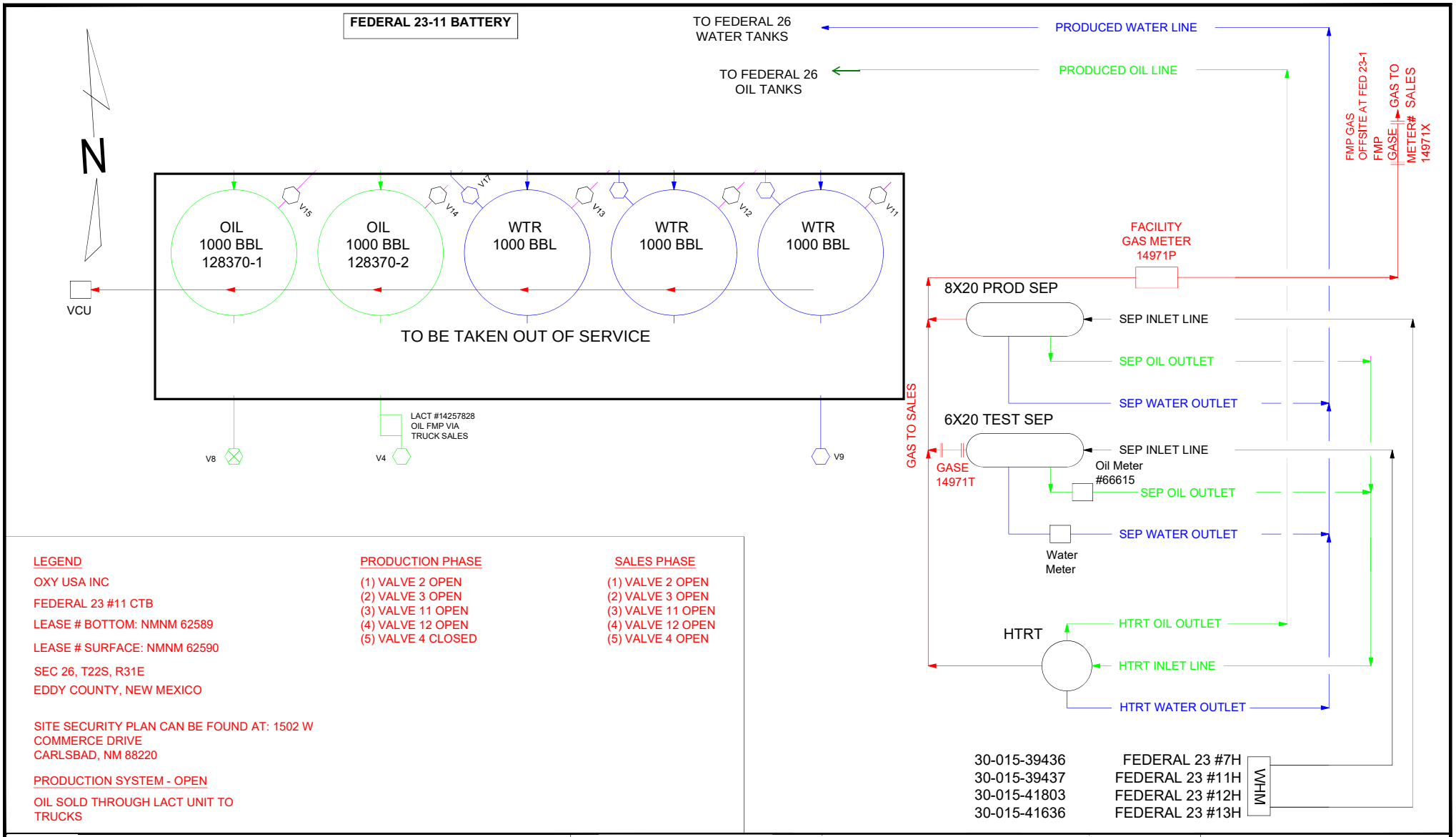

File Path C:\Users\whitaks\Desktop\WEEK 7\FEDERAL 23-11 CTB.dwg Saved by: WHITAKS on: Feb. 20, 19 - 8:56 AM

FEDERAL 26-1 BATTERY

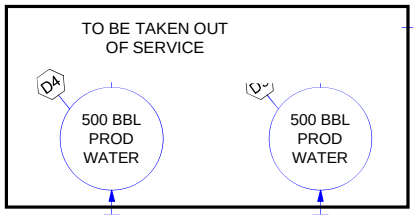

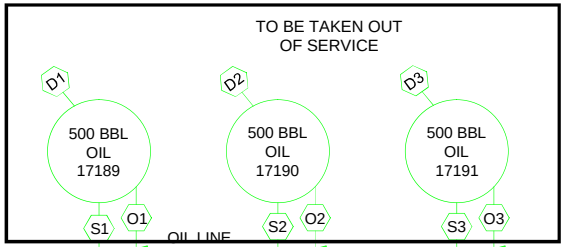

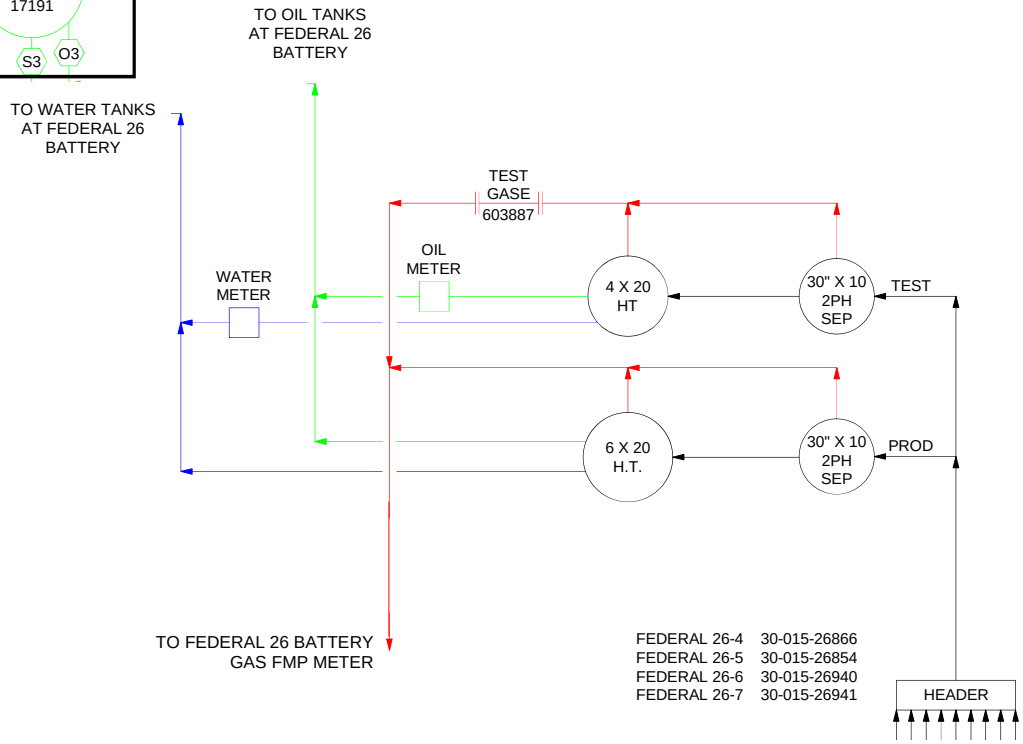

OXY
LEASE: FEDERAL 26-1 CTB
LEASE SERIAL #: USA NM62590
LOCATED AT: SECTION 26 T22S R31E
EDDY COUNTY, NM

THIS LEASE IS SUBJECT TO THE SECURITY PLAN FOR THE CARLSBAD OPERATION. THE PLAN IS LOCATED AT:
1502 W COMMERCE DR, CARLSBAD, NM 88220

I. SALES SYSTEM: CLOSED

OIL SALES TO PIPELINE LACT, HAND GAUGE AND TURN ON PUMP TO PLAINS PIPELINE

II. PRODUCTION PHASE
1. VALVE O1-O3, W1-W2 OPEN
2. VALVE S1-S3 OPEN
3. VALVES D1-D5 CLOSED

FEDERAL 26-4	30-015-26866
FEDERAL 26-5	30-015-26854
FEDERAL 26-6	30-015-26940
FEDERAL 26-7	30-015-26941

NOTE:

REFERENCE DRAWINGS	
NO.	TITLE

REVISIONS					
NO.	DATE	DESCRIPTION	BY	CHK.	APP.
A	1-31-19	ISSUED FOR REVIEW	SHW	SM	

ENGINEERING RECORD		
	BY	DATE
DRN:	SHW	1-31-19
DES:		
CHK:		
APP:		
AFE No.		
OXY ENGR.		
PROJ. ENGR:	S. MUSALLA	
SCALE:	NONE	

Oxy USA INC
A subsidiary of Occidental Petroleum Corporation

SITE FACILITY DIAGRAM
FEDERAL 26-1 CTB

EDDY COUNTY, NEW MEXICO

FLOT SCALE
CAD NO.
DWG. NO. 001
REV A

S:\allsites\Primary F&C Folder\DESIGN AND DRAFTING\STD ENGINEERING INFORMATION\REGULATORY\TEMP FILE-STILLMAN\SEPARATED BY WEEK\WEEKFEDERAL 26-1 CTB.dwg20190204.15555226

File Path S:\allsites\Primary F&C Folder\DESIGN AND DRAFTING\STD ENGINEERING INFORMATION\REGULATORY\TEMP FILE-STILLMAN\SEPARATED BY WEEK\WEEK 7\FEDERAL 26-1 CTB.dwg Saved by: WHITAKS on: Feb. 4, 19 - 3:29 PM

FEDERAL 26 CTB
SEC 26, T22S, R31E
EDDY COUNTY, NEW MEXICO
OXY USA INC
NMNM 62590

FEDERAL 26 12H 30-015-41573
FEDERAL 26 13H 30-015-41600

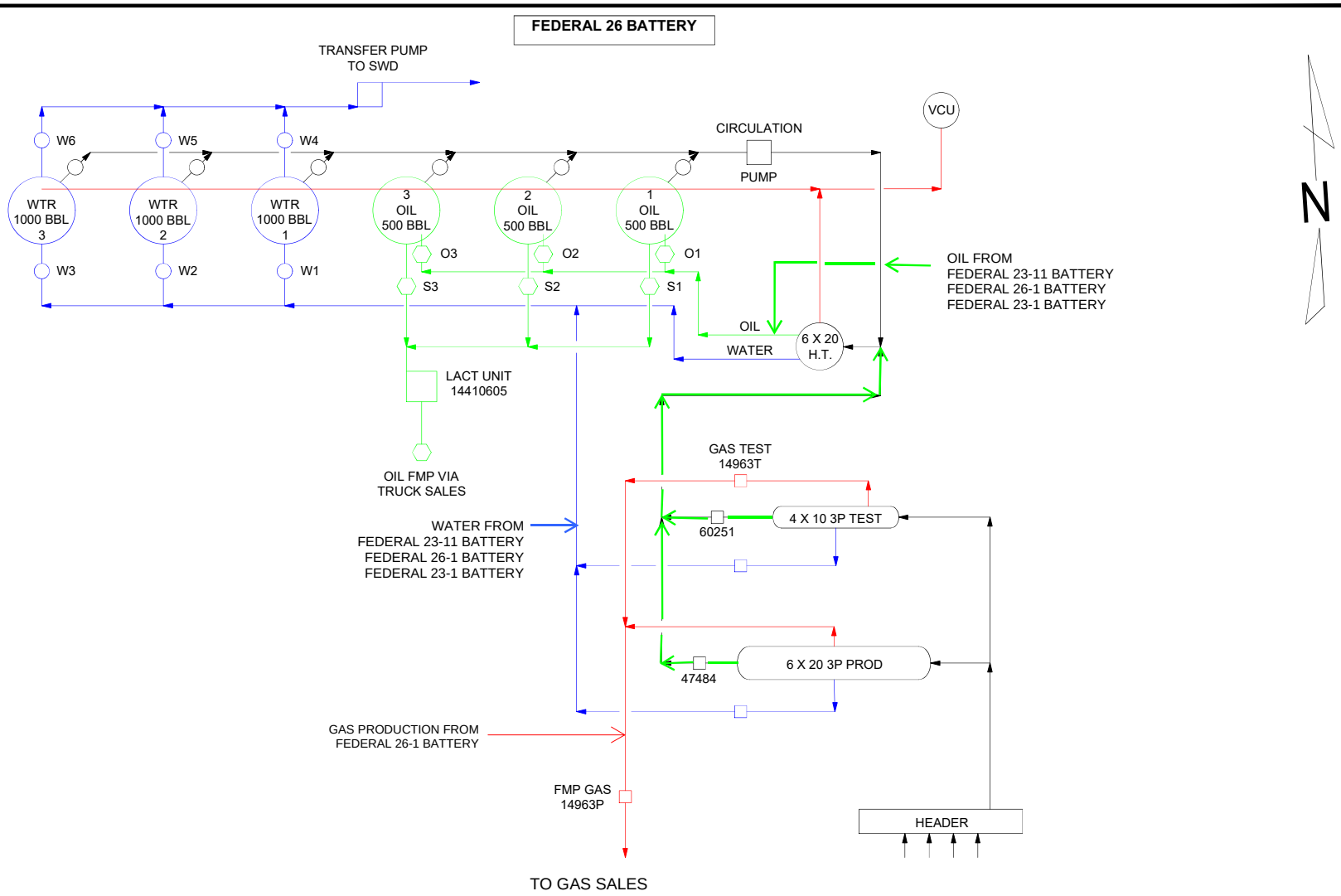

Oxy USA INC
A subsidiary of Occidental Petroleum Corporation

FEDERAL 26 BATTERY

C:\Users\whitaks\Desktop\WEEK 7\FEDERAL 26 CTB.dwg20190220.0859

File Path C:\Users\whitaks\Desktop\WEEK 7\FEDERAL 26 CTB.dwg Saved by: WHITAKS on: Feb. 20, 19 - 8:58 AM

CABIN LAKE 31 FEDERAL 6H
SEC 31, T21S, R32E
LEA COUNTY, NEW MEXICO
LEASE NO. NMNM 42814
CA NO. NMNM 132217

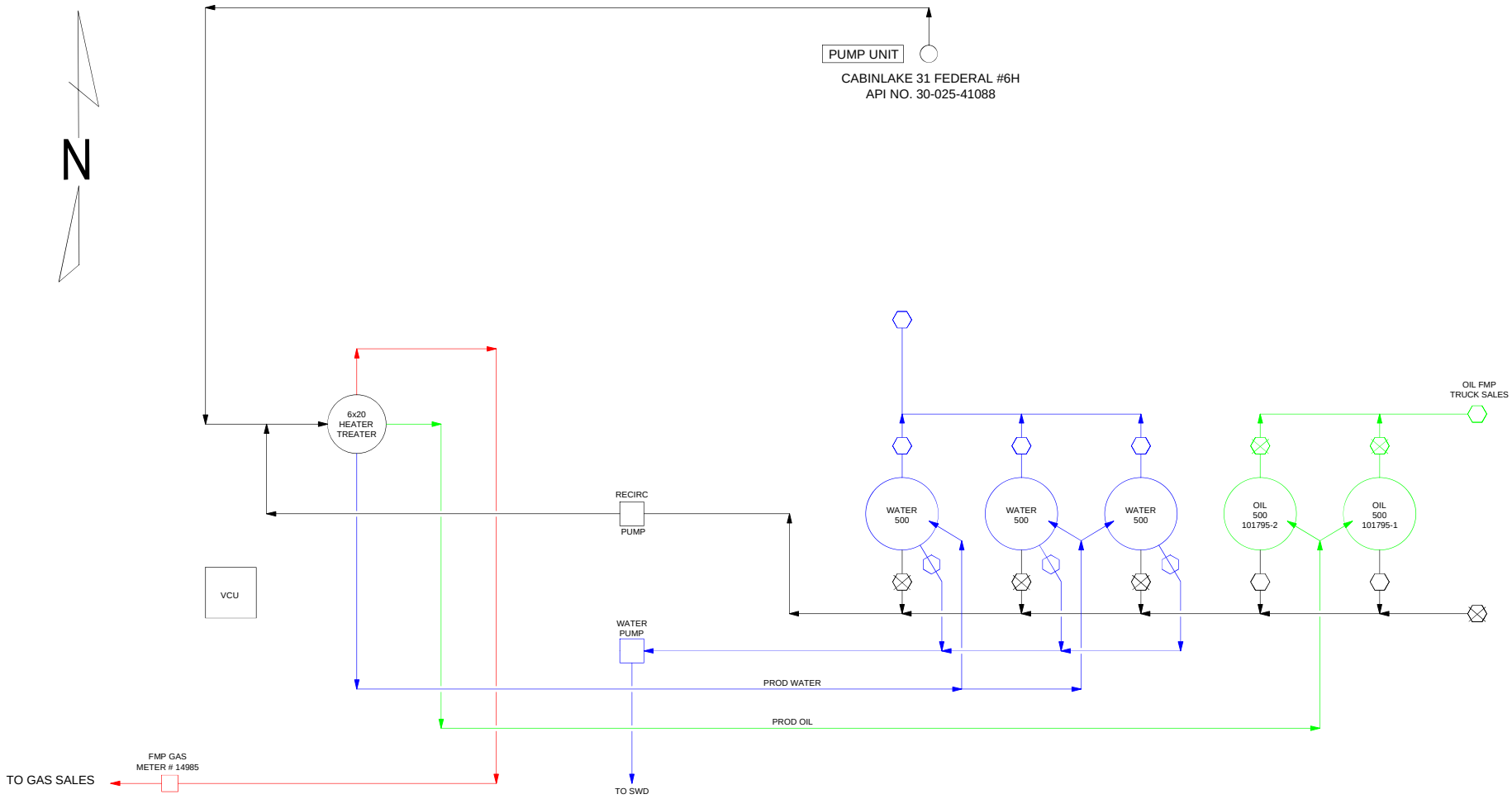

NOTE:

REFERENCE DRAWINGS	
NO.	TITLE

REVISIONS					
NO.	DATE	DESCRIPTION	BY	CHK.	APP.
A	11-29-18	ISSUED FOR REVIEW	JD	SM	

ENGINEERING RECORD		
	BY	DATE
DRN:	JD	11-29-18
DES:		
CHK:		
APP:		
AFE No.		
OXY ENGR.		
PROJ. ENGR:	S. MUSALLA	
SCALE:	NONE	

OXY USA INC

SITE SECURITY DIAGRAM
CABIN LAKE 31 FEDERAL 6H

PLOT SCALE
CAD NO.
DWG. NO. 001
REV A

S:\allsites\Primary F&C Folder\DESIGN AND DRAFTING\STD ENGINEERING INFORMATION\REGULATORY\TEMP FILE-STILLMAN\SEPARATED BY WEEK\weekCABIN LAKE 31 FEDERAL 6H.dwg20190117.10214075

File Path S:\allsites\Primary F&C Folder\DESIGN AND DRAFTING\STD ENGINEERING INFORMATION\REGULATORY\TEMP FILE-STILLMAN\SEPARATED BY WEEK\week 1\CABIN LAKE 31 FEDERAL 6H.dwg Saved by: DAUGHEJ on: Jan. 17, 19 - 10:21 AM

FEDERAL 12-4 NORTH CTB
SEC 12, T22S, R31E
EDDY COUNTY, NEW MEXICO
OXY USA INC
LEASE NO NMNM 29233

INLET WELLS
FEDERAL 12 #004 30-015-26859
FEDERAL 12 # 005 30-015-26860
FEDERAL 12 #008 30-015-26942
FEDERAL 12 #007 30-015-26918

SECURITY PLAN LOCATED AT:
1502 W COMMERCE DR.
CARLSBAD, NM 88220

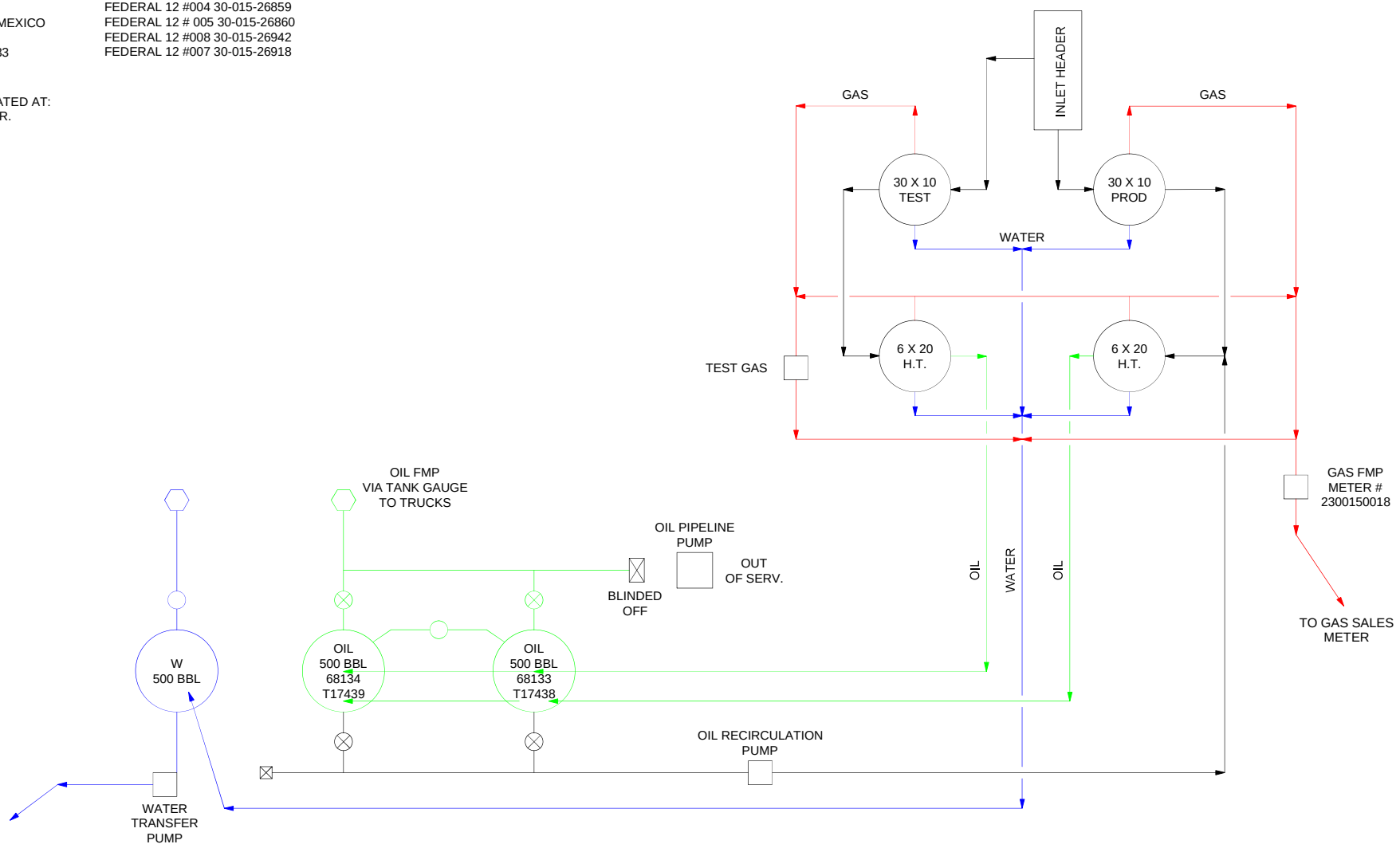

NOTE:

REFERENCE DRAWINGS	
NO.	TITLE

REVISIONS					
NO.	DATE	DESCRIPTION	BY	CHK.	APP.
A	1-31-19	ISSUED FOR REVIEW	SHW	SM	

ENGINEERING RECORD		
	BY	DATE
DRN:	SHW	1-31-19
DES:		
CHK:		
APP:		
AFE No.		
OXY ENGR.		
PROJ. ENGR:	S. MUSALLA	
SCALE:	NONE	

Oxy USA INC
A subsidiary of Occidental Petroleum Corporation

SITE FACILITY DIAGRAM
FEDERAL 12-4 NORTH CTB
EDDY COUNTY, NEW MEXICO

PLOT SCALE
CAD NO.
DWG. NO. 001
REV A

S:\allsites\Primary F&C Folder\DESIGN AND DRAFTING\STD ENGINEERING INFORMATION\REGULATORY\TEMP FILE-STILLMAN\SEPARATED BY WEEK\WEEKFEDERAL 12-4 NORTH CTB.dwg20190222.13482777

File Path S:\allsites\Primary F&C Folder\DESIGN AND DRAFTING\STD ENGINEERING INFORMATION\REGULATORY\TEMP FILE-STILLMAN\SEPARATED BY WEEK\WEEK 8\FEDERAL 12-4 NORTH CTB.dwg Saved by: WHITAKS on: Feb. 11, 19 - 10:25 AM

FEDERAL 1 BATTERY
OXY USA INC
SEC 1, T22S, R31E
EDDY COUNTY, NEW MEXICO
LEASE NO. NMNM 12845

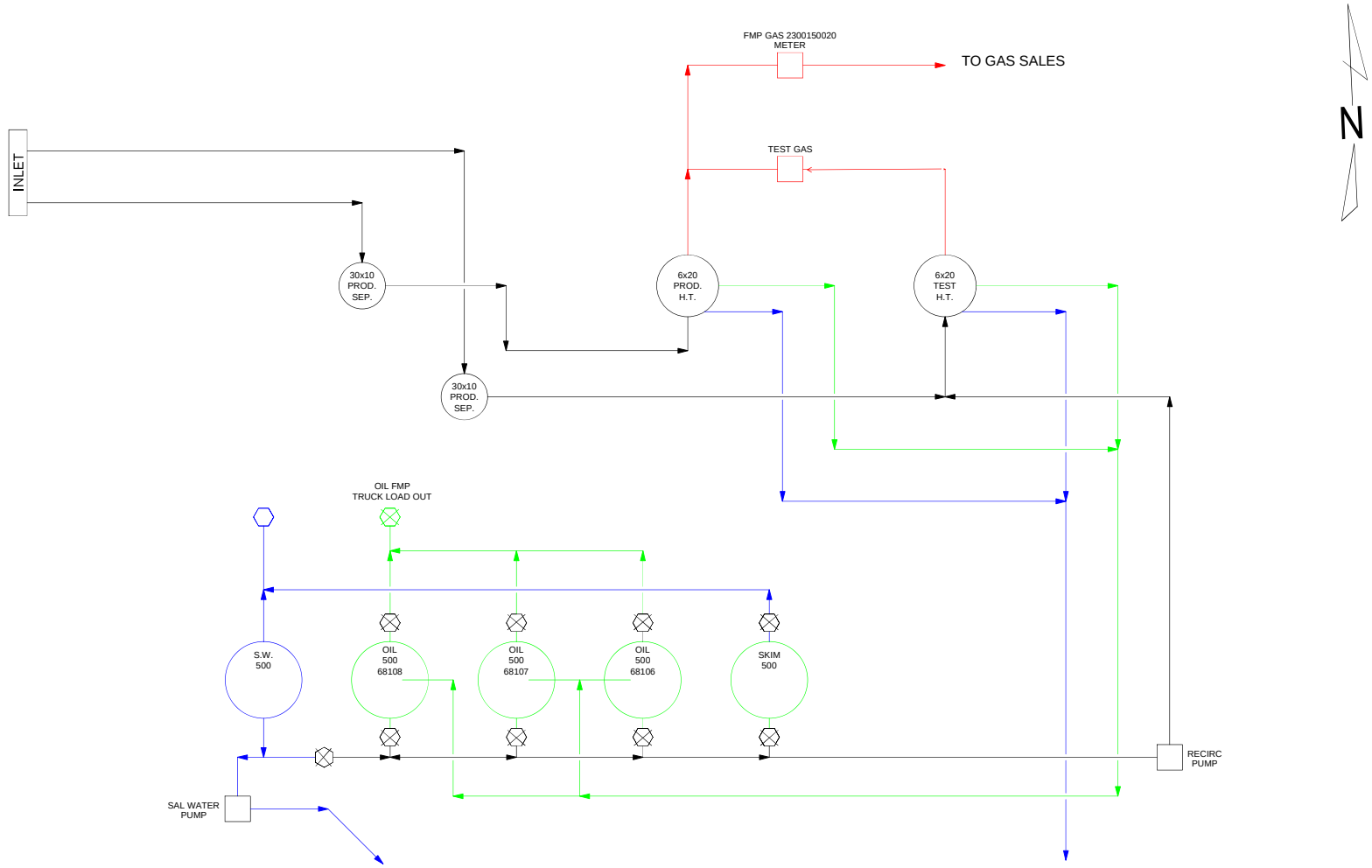

FEDERAL 1-4 30-015-26843
FEDERAL 1-5 30-015-26909
FEDERAL 1-6 30-015-26910
FEDERAL 1-7 30-015-26988

NOTE:

REFERENCE DRAWINGS		REVISIONS						ENGINEERING RECORD	
NO.	TITLE	NO.	DATE	DESCRIPTION	BY	CHK.	APP.	BY	DATE
		A	12-11-18	ISSUED FOR REVIEW	FNR	SM		DRN: FNR	12-11-18
								DES:	
								CHK:	
								APP:	
								AFE No.	
								OXY ENGR.	
								PROJ. ENGR: S. MUSALLA	
								SCALE: NONE	

OXY USA INC

SITE SECURITY DIAGRAM
FEDERAL 1 BATTERY

PLOT SCALE | DWG. NO. 001 | REV A
CAD NO.

S:\allsites\Primary F&C Folder\DESIGN AND DRAFTING\STD ENGINEERING INFORMATION\REGULATORY\TEMP FILE-STILLMAN\SEPARATED BY WEEK\WEEKFEDERAL 1 BATTERY.dwg20190117.134134

File Path S:\allsites\Primary F&C Folder\DESIGN AND DRAFTING\STD ENGINEERING INFORMATION\REGULATORY\TEMP FILE-STILLMAN\SEPARATED BY WEEK\WEEK 2\FEDERAL 1 BATTERY.dwg Saved by: DAUGHEJ on: Jan. 17, 19 - 1:41 PM

FEDERAL 12-1 BATTERY
NMNM29233
SEC 12 T22S R31E
EDDY COUNTY, NEW MEXICO

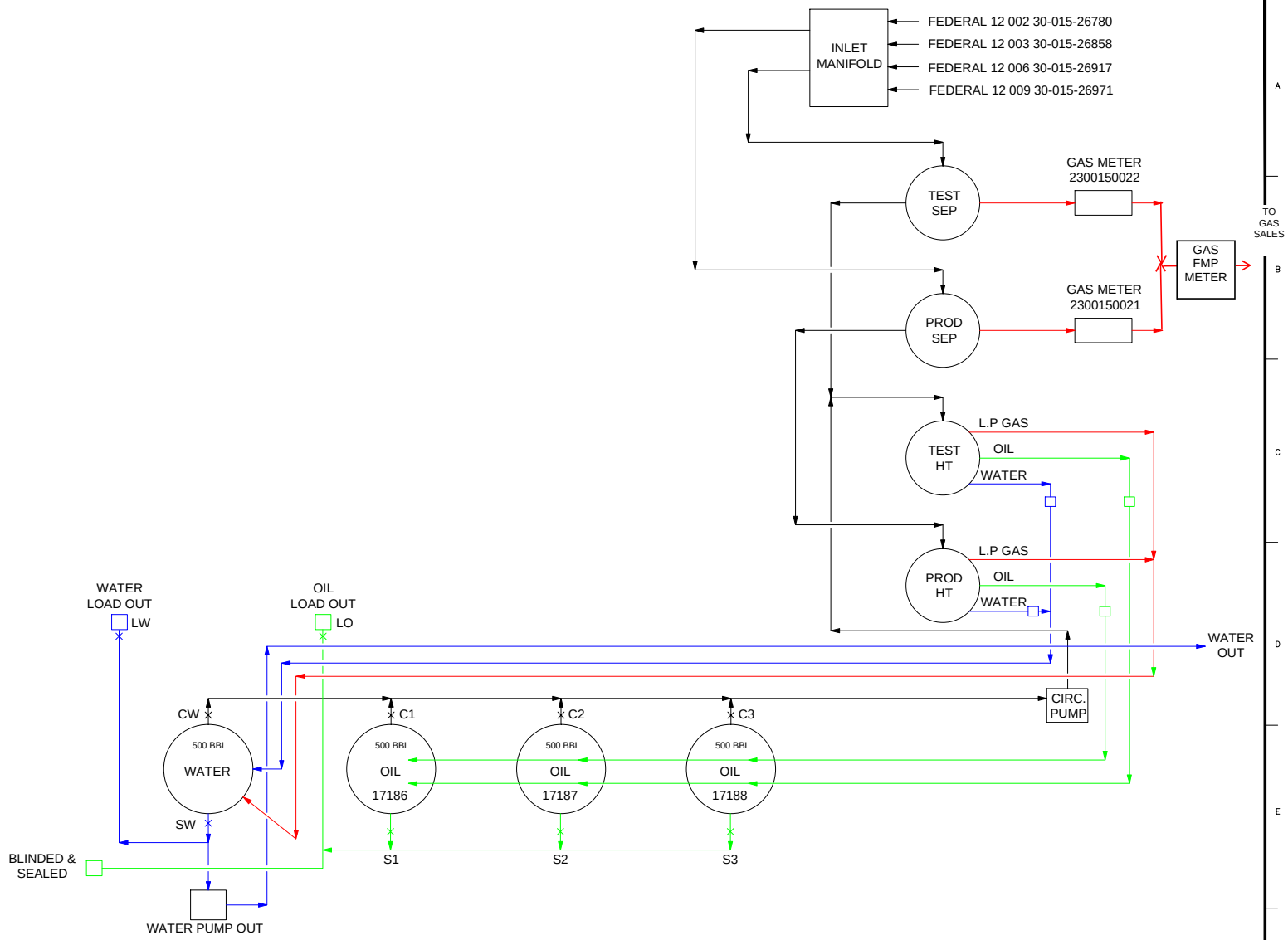

PRODUCTION INTO OIL TANK 3 AND ON CIRCULATION:
P3,T3 OPEN: P2, P1, T2, T1 CLOSED
C3 OPEN: C1, C2, CW CLOSED-SEALED
S1, S2, S3 CLO9SED-SEALED: SW OPEN

SALES FROM OIL TANK 3:
P3, T3, P2, P3 CLOSED: P1,T1 OPEN
S3 OPEN: S1, S2 CLOSED-SEALED
C3, C2, CW CLOWED-SEALED, C1 OPEN

NOTES

- GAS
- OIL
- WATER
- MIXED

REV	DATE	DRAWN BY	CHECKED BY	DESCRIPTION	ONEOXY PROJECT #	PROJ. ENG.	SIGNATURE
						OXY APPROVAL	

PROJECT DRAWING REVISION

IN CASE OF DEVIATIONS A MARKED UP PRINT SHALL BE SENT TO THE PROJECT ENGINEER

REV	DATE	APP. BY	DESCRIPTION	PROJECT NUMBER	PROJ.ENG.	SPEC.ENG.
0	01/22/2018	RW	APPROVED	–	RW	–
					OXY APPROVAL	

MASTER DRAWING REVISION

NOTES/REFERENCE DRAWINGS

FACILITY CODE: 30015BT0418
DISC. CODE: PRO
FACILITY TYPE: SWD
DWG. TYPE: LICENSE – PERMIT
FEDERAL 12–1
DESCRIPTION: PRODUCTION–SWD FACILITY

SCALE: NONE
CAD DRAWING

Oxy USA Inc.- Permian Resources
A subsidiary of Occidental Petroleum Corporation

DWG	ASSET	FACILITY CODE	DISC. CODE	SERIAL NUMBER	SHEET NUMBER	REV
NO	PER	30015BT0418	HES	00001	002	0

File Path S:\all\sites\Primary F&C Folder\DESIGN AND DRAFTING\STD ENGINEERING INFORMATION\REGULATORY\TEMP FILE-STILLMAN\PER-30015BT0418-HES-00001-002.dwg Saved by: DAUGHEJ on: Mar. 5, 18 - 9:16 AM

FEDERAL 12 NO. 14H BATTERY
SEC 12, T22S, R31E
EDDY COUNTY, NEW MEXICO
OXY USA INC
LEASE NO. NMNM 29233

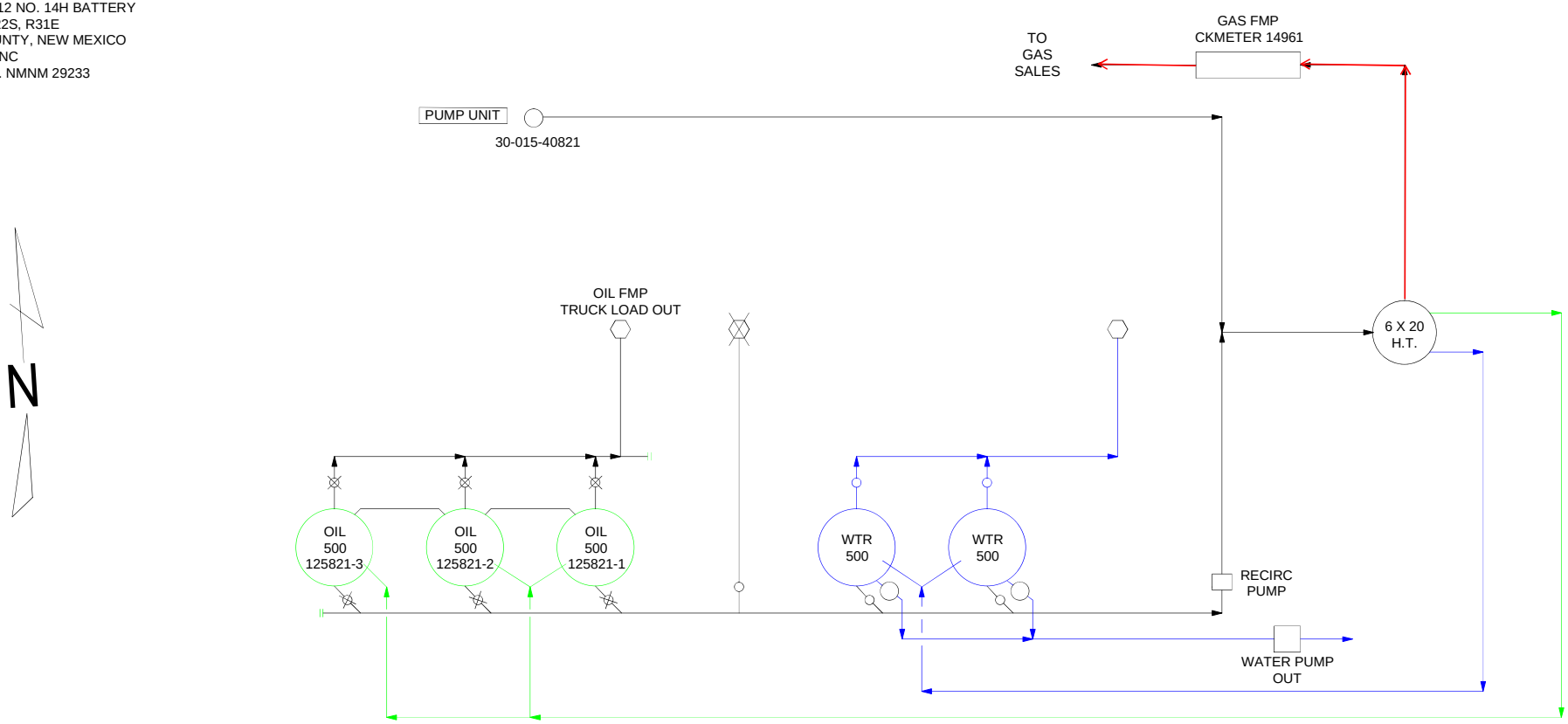

LEGEND
OPERATOR: OXY USA INC
FACILITY NAME: FEDERAL 12-14H BATTERY
LEASE SERIAL NO: NMNM29233
LOCATION: SECTION 12, TOWNSHIP 22 SOUTH, RANGE 31 EAST

COUNTY: EDDY

SITE SECURITY PLAN CAN BE FOUND AT: 1502 W COMMERCE DRIVE
CARLSBAD, NM 88220

PRODUCTION SYSTEM - OPEN
OIL SOLD BY TANK GAUGE VIA TANK TRUCK

PRODUCTION PHASE (3)
1. VALVE 19 OPEN
2. VALVE 1 CLOSED
3. VALVE 10 CLOSED
4. VALVE 20 CLOSED
5. VALVE 21 CLOSED

PRODUCTION PHASE (2)
1. VALVE 20 OPEN
2. VALVE 2 CLOSED
3. VALVE 11 CLOSED
4. VALVE 19 CLOSED
5. VALVE 21 CLOSED

PRODUCTION PHASE (1)
1. VALVE 21 OPEN
2. VALVE 3 CLOSED
3. VALVE 12 CLOSED
4. VALVE 19 CLOSED
5. VALVE 20 CLOSED

SALES PHASE (3)
1. VALVE 19 CLOSED
2. VALVE 1 OPEN
3. VALVE 10 CLOSED
4. VALVE 2 CLOSED
5. VALVE 3 CLOSED
6. VALVE 4 OPEN

SALES PHASE (2)
1. VALVE 20 CLOSED
2. VALVE 2 OPEN
3. VALVE 11 SEALED/CLOSED
4. VALVE 1 CLOSED
5. VALVE 3 CLOSED
6. VALVE 4 OPEN

SALES PHASE (1)
1. VALVE 21 CLOSED
2. VALVE 3 OPEN
3. VALVE 12 CLOSED
4. VALVE 1 CLOSED
5. VALVE 2 CLOSED
6. VALVE 4 OPEN

NOTE:

REFERENCE DRAWINGS	
NO.	TITLE

REVISIONS					
NO.	DATE	DESCRIPTION	BY	CHK.	APP.
A	12-20-18	ISSUED FOR REVIEW	SHW	SM	

ENGINEERING RECORD		
	BY	DATE
DRN:	SHW	12-20-18
DES:		
CHK:		
APP:		
AFE No.		
OXY ENGR.		
PROJ. ENGR:	S. MUSALLA	
SCALE:	NONE	

OXY USA INC

SITE FACILITY DIAGRAM
FEDERAL 12 NO 14H BATTERY

EDDY COUNTY, NEW MEXICO

PLOT SCALE
CAD NO.
DWG. NO. 001
REV A

S:\allsites\Primary F&C Folder\DESIGN AND DRAFTING\STD ENGINEERING INFORMATION\REGULATORY\TEMP FILE-STILLMAN\SEPARATED BY WEEK\WEEKFEDERAL 12 NO 14H BATTERY.dwg20190130.16212146

File Path S:\allsites\Primary F&C Folder\DESIGN AND DRAFTING\STD ENGINEERING INFORMATION\REGULATORY\TEMP FILE-STILLMAN\SEPARATED BY WEEK\WEEK 3\FEDERAL 12 NO 14H BATTERY.dwg Saved by: DAUGHEJ on: Jan. 17, 19 - 2:16 PM

NEFF 25 BATTERY

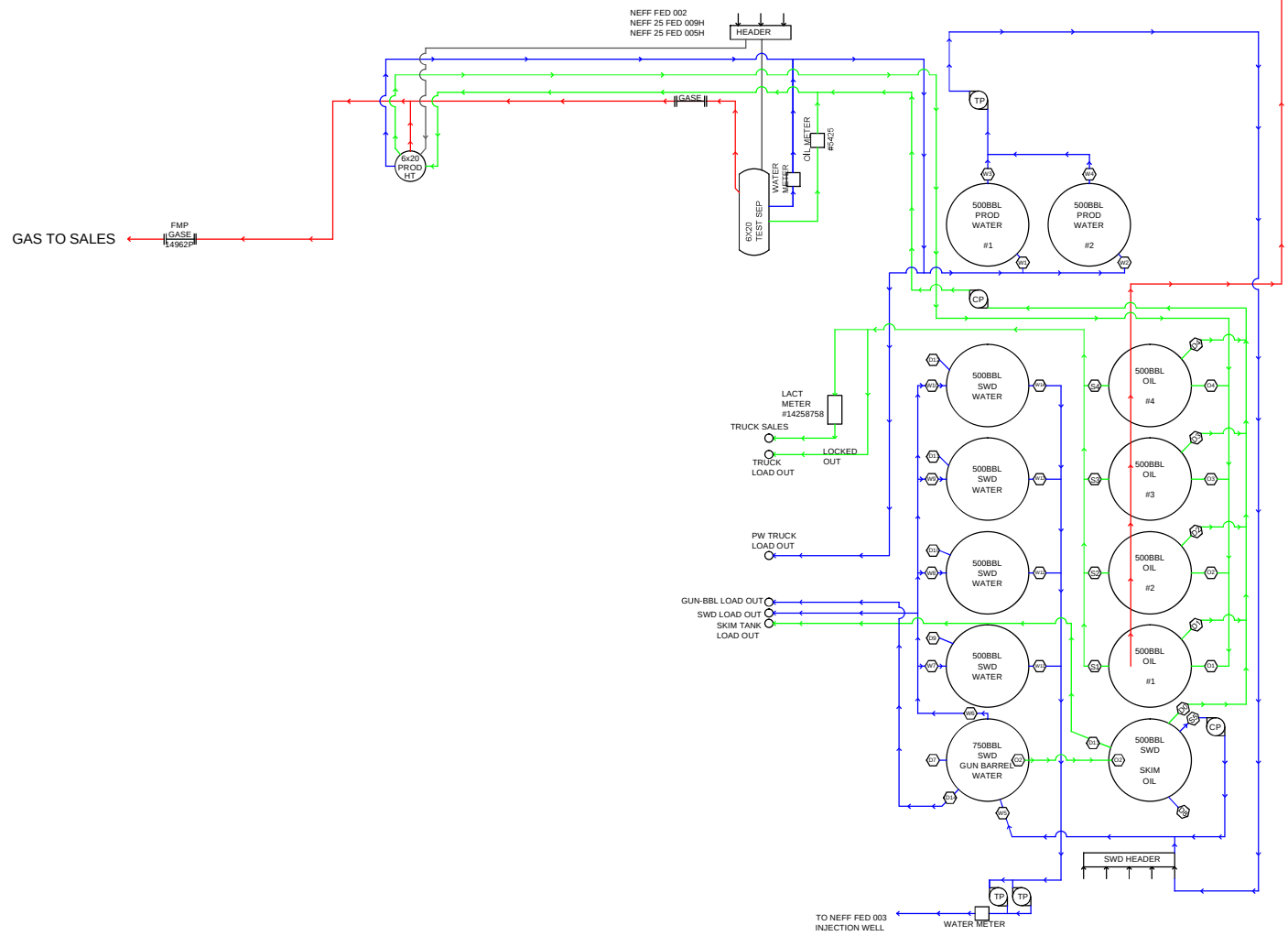

OXY
Lease: NEFF 25 FED 1 CTB
Lease Serial #: USA NMNM 25365
Located at: Section 25 T22S R31E
Eddy County, NM

This lease is subject to the security plan for the Carlsbad Operation. The plan is located at:
1502 W Commerce Dr, Carlsbad, NM 88220

I.Sales System: Closed
Oil sales to truck load out via LACT unit

II. Production Phase
1. Valve O2-O4, W1-W14 Open
2. Valve S1-S4 Open
3. Valves D1-D14 Closed

NOTE:

REFERENCE DRAWINGS		REVISIONS						ENGINEERING RECORD	
NO.	TITLE	NO.	DATE	DESCRIPTION	BY	CHK.	APP.	BY	DATE
								DRN: CV	4/12/2016
								DES:	
								CHK:	
								APP:	
								AFE No.	
								OXY ENGR.	
								PROJ. ENGR: C. VASQUEZ	
								SCALE: NONE	

S:\allsites\Primary F&C Folder\DESIGN AND DRAFTING\DRAFTING-TEAM\STILLMAN\LOST TANK DRAWINGS\NEFF 25 FED 1 CTB - SITE SECURITY DIAGRAM (2016.04.25).dwg20160602.10292639

OXY USA INC

SITE FACILITY DIAGRAM
NEFF 25 FED 1 BATTERY

EDDY COUNTY, NEW MEXICO

PLOT SCALE
CAD NO.
DWG. NO. 001
REV B

GETTY 24 FEDERAL NO. 11 BATTERY
SEC 24, T22S, R31E
OXY USA INC
EDDY COUNTY, NEW MEXICO
NMNM 25876

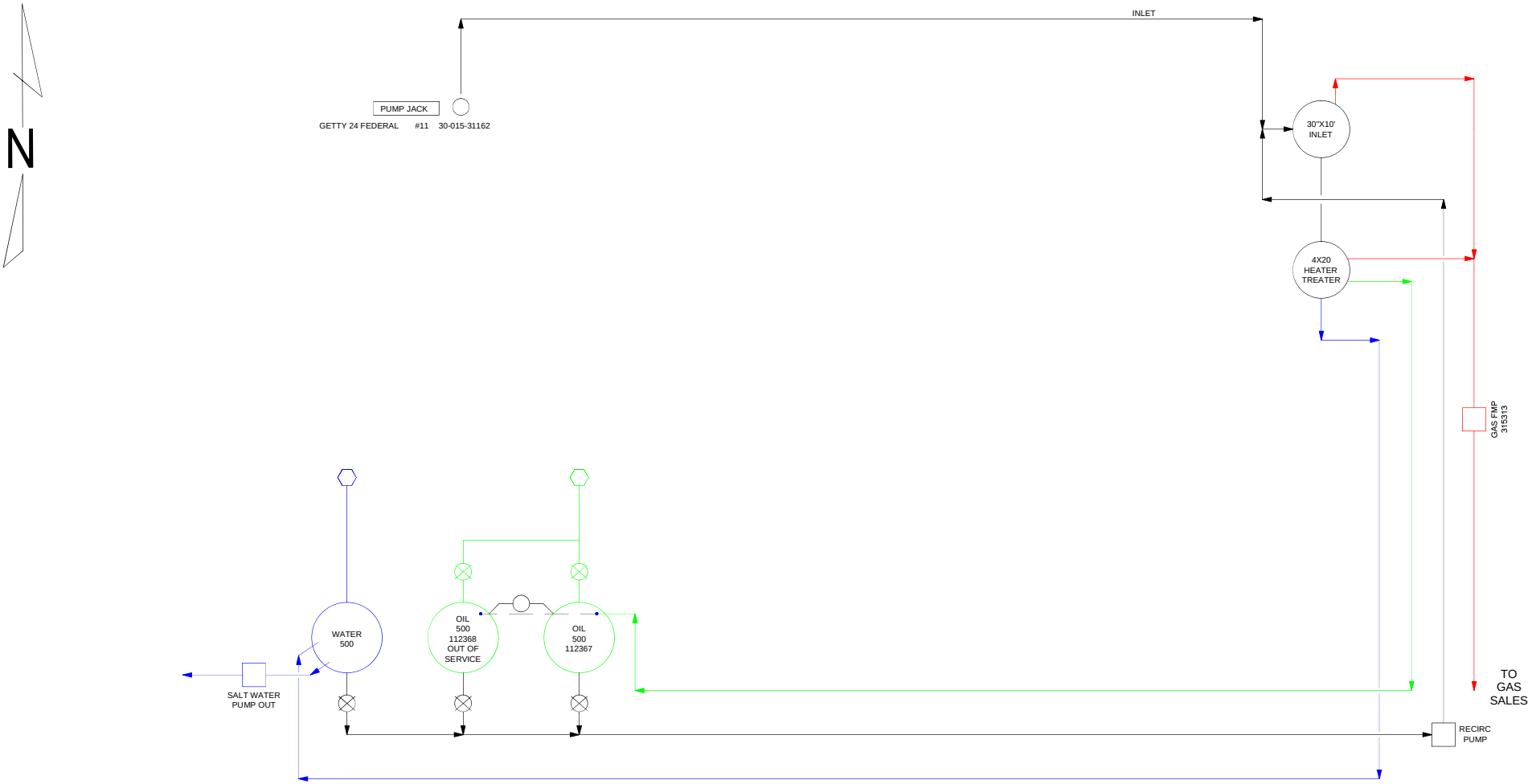

NOTE:

- GAS
- OIL
- WATER
- MIXED

REFERENCE DRAWINGS	
NO.	TITLE

REVISIONS					
NO.	DATE	DESCRIPTION	BY	CHK.	APP.
A	11-29-18	ISSUED FOR REVIEW	NN	SM	

ENGINEERING RECORD		
	BY	DATE
DRN:	NN	12-11-18
DES:		
CHK:		
APP:		
AFE No.		
OXY ENGR.		
PROJ. ENGR:	S. MUSALLA	
SCALE:	NONE	

OXY USA INC

SITE FACILITY DIAGRAM
GETTY 24 FEDERAL NO. 11 BATTERY
SEC 24, T22S, R31E
EDDY COUNTY, NEW MEXICO
NMNM 25876

PLOT SCALE | DWG. NO. 001 | REV A
CAD NO.

S:\allsites\Primary F&C Folder\DESIGN AND DRAFTING\STD ENGINEERING INFORMATION\REGULATORY\TEMP FILE-STILLMAN\SEPARATED BY WEEK\WEEKGETTY 24 FED NO.11 BATTERY.dwg20190117.13444261

File Path S:\allsites\Primary F&C Folder\DESIGN AND DRAFTING\STD ENGINEERING INFORMATION\REGULATORY\TEMP FILE-STILLMAN\SEPARATED BY WEEK\WEEK 2\GETTY 24 FED NO.11 BATTERY.dwg Saved by: DAUGHEJ on: Jan. 17, 19 - 1:44 PM

LIVINGSTON 19 BATTERY

OXY
Lease: LIVINGSTON RIDGE 19-1
Lease Serial #: NM 90587
Located at: 660' FNL & 330' FWL
SEC. 19, T22S, R32E
LEA County, NM

This lease is subject to the security plan for the Carlsbad Operation. The plan is located at:
1502 W Commerce Dr, Carlsbad, NM 88220

I.Sales System: OPEN

OIL SALES BY TANK GAUGE VIA TANK TRUCK

II. Production Phase (OT#1)
1. Valve 2 CLOSED
2. Valve 4 OPEN
3. Valve 5 CLOSED
4. Valve 6 CLOSED

III. Production Phase (OT#2)
1. Valve 3 CLOSED
2. Valve 5 OPEN
3. Valve 7 CLOSED
4. Valve 4 CLOSED

II. SALES Phase (OT#1)
1. Valve 1 OPEN
2. Valve 6 CLOSED
3. Valve 4 CLOSED
4. Valve 2 OPEN

III. SALES Phase (OT#2)
1. Valve 1 OPEN
2. Valve 3 OPEN
3. Valve 5 CLOSED
4. Valve 7 CLOSED

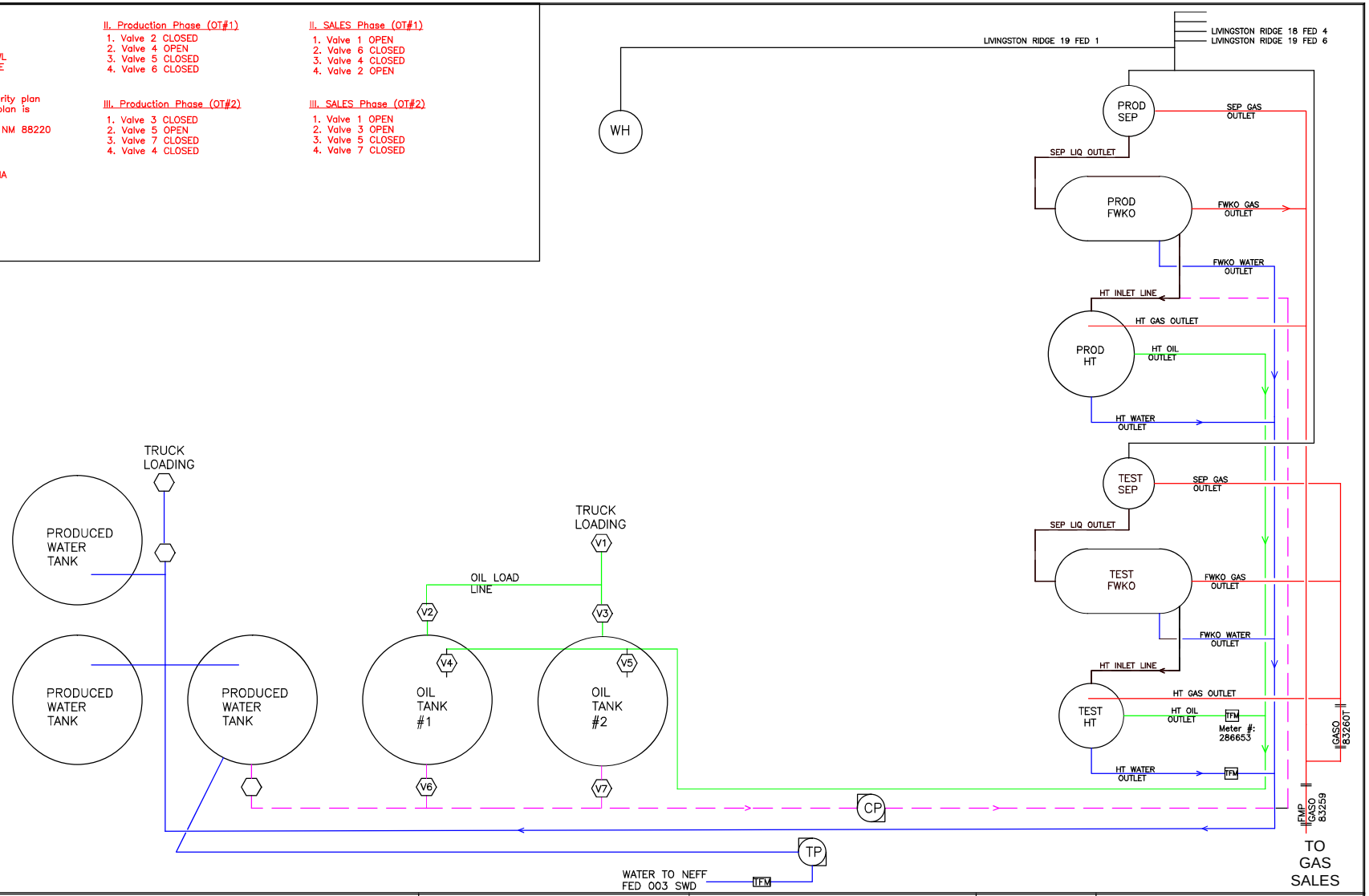

NOTE:

REFERENCE DRAWINGS		REVISIONS						ENGINEERING RECORD	
NO.	TITLE	NO.	DATE	DESCRIPTION	BY	CHK.	APP.	BY	DATE
		01	05/20/16	SITE SECURITY DIAGRAM (REV)	JC			DRN:	
								DES:	
								CHK:	
								APP:	
								AFE No.	
								OXY ENGR.	
								PROJ. ENGR:	
								SCALE: NONE	

OXY USA INC

SITE FACILITY DIAGRAM
LIVINGSTON RIDGE 19-1

LEA COUNTY, NEW MEXICO

PLOT SCALE | DWG. NO. 001 | REV 01
CAD NO.

\\Chowfap2\data\allsites\Permian Resources Facilities\Facilities Directory\LIVINGSTON RIDGE 19 FEDERAL 1 CTB BATTERY - 30025BT0106\LIVINGSTON RIDGE 19-1 - SITE DIAGRAM (2016.05.20).dwg20160527.1732034

LEASE: LOST TANK 3 FEDERAL #001 CTB
API #: 3001529638
LOCATED AT: SECTION 3 T22S R31E
EDDY COUNTY, NEW MEXICO
NMNM 0417696

THIS LEASE IS SUBJECT TO THE SECURITY PLAN FOR THE CARLSBAD OPERATION. THE PLAN IS LOCATED AT:
1502 W COMMERCE DR, CARLSBAD, NM 88220

I. SALES SYSTEM LOST TANK 3 FED 001:
OIL:
1. VALVE O2, O3 OPEN
2. VALVE O1, C1 CLOSED
OIL SALES TO TRUCK VIA LACT UNIT

WATER:
TO TRUCK:
1. VALVE W1, C2 CLOSED
2. VALVE W2, W3 OPEN

II. PRODUCTION PHASE LOST TANK 3 FED 001:
1. VALVE O1, W1, C1, *OR* C2 OPEN
2. VALVE O2, O3, W2, W3 CLOSED

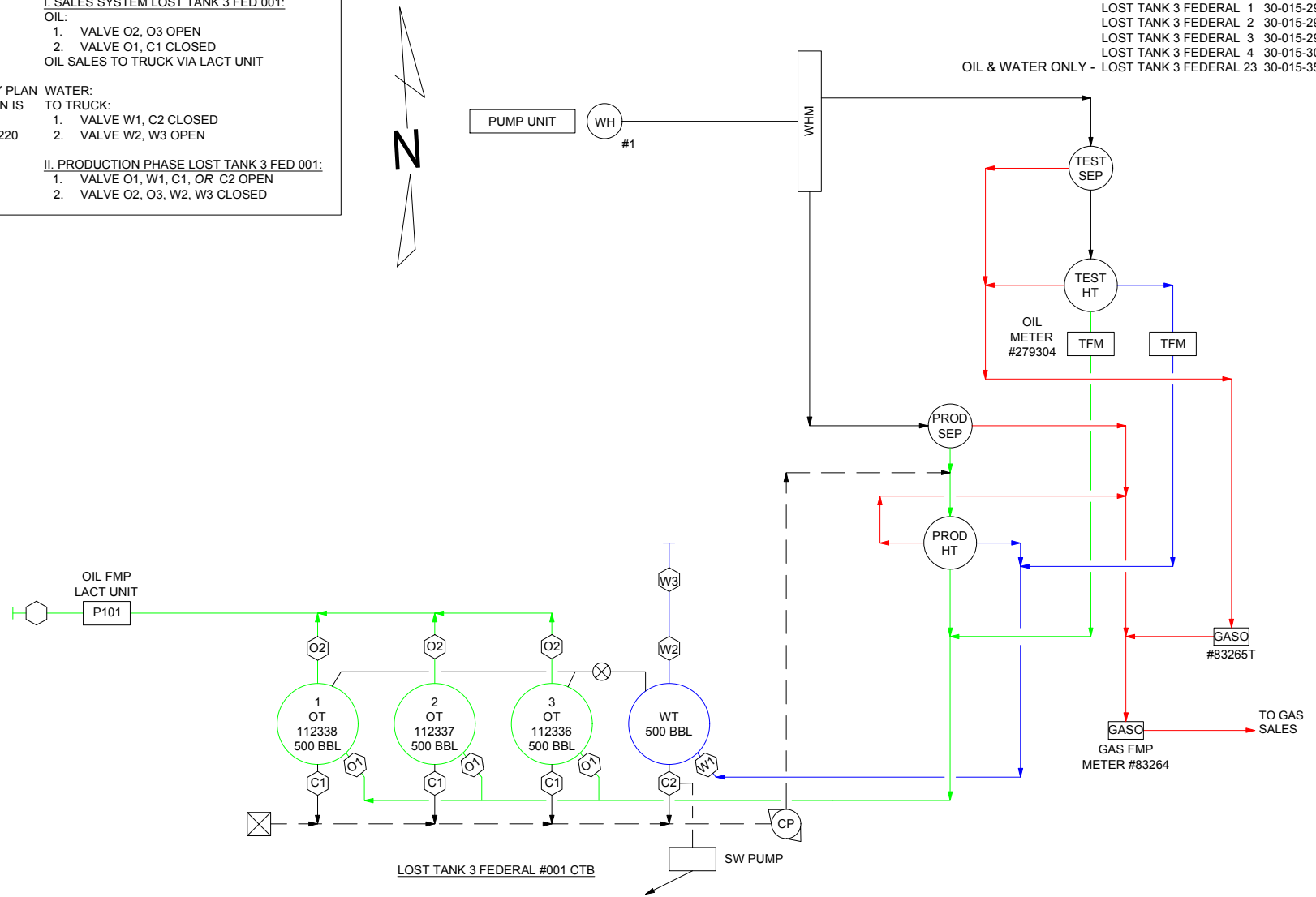

Oxy USA INC
A subsidiary of Occidental Petroleum Corp

LOST TANK 3 FEDERAL 001 BATTERY

LOST TANK 3 FEDERAL 23
SATELLITE
E 03 T22S R31E

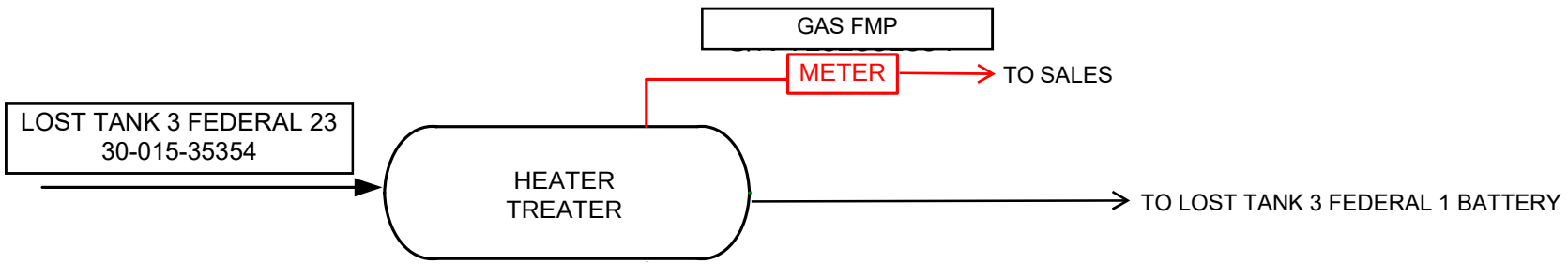

PRODUCTION MIX
OIL
GAS
WATER
EQUIPMENT

REVISION BLOCK

NO.	DATE	DESCRIPTION	BY
0		PRELIMINARY DRAFT	KAO
1		REVISION	JC
2		COMMINGLE APPLICATION	TS

OXY USA INC

PROCESS FLOW DIAGRAM
LOST TANK 3 FEDERAL 23

Lease: LOST TANK 3 FEDERAL #5 CTB
API #: 3001530586
Located at: Section 3 T22S R31E

This lease is subject to the security plan for the Carlsbad Operation. The plan is located at:
1502 W Commerce Dr, Carlsbad, NM 88220

I. Sales System LOST TANK 3 FED 5:

OIL:
1. Valve O2, O3, O4 Open
2. Valve O1, C1, Closed

Oil Sales to truck via LACT.

WATER:
To truck:
1. Valve W1, W2, C2 Closed
2. Valve W3, W4 Open

To SWD via Transfer Pump:
1. Valve W1, W2, W4, C2 Closed
2. Valve W3 Open.

II. Production Phase LOST TANK 3 FED 5:

1. Valve O1, W1, W2, C1 *or* C2 Open
2. Valve O2, O3, O4, W3, W4 Closed

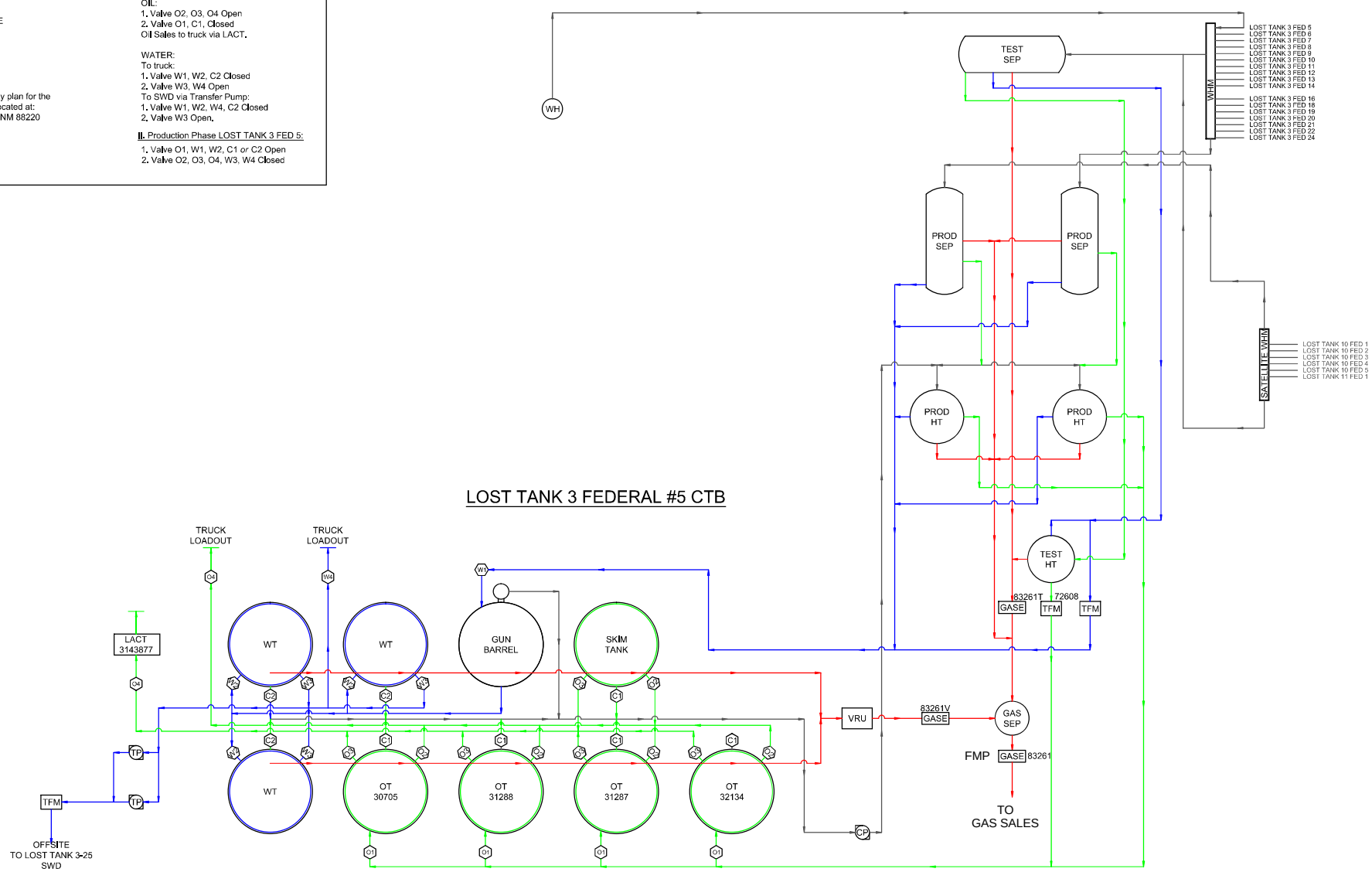

NOTE:

REFERENCE DRAWINGS		REVISIONS						ENGINEERING RECORD	
NO.	TITLE	NO.	DATE	DESCRIPTION	BY	CHK.	APP.	BY	DATE
								DRN: JDD	06/08/2016
								DES:	
								CHK:	
								APP:	
								AFE No.	
								OXY ENGR.	
								PROJ. ENGR:	
								SCALE: NONE	

OXY USA INC

SITE FACILITY DIAGRAM
LOST TANK 3 FEDERAL #5 CTB

EDDY COUNTY, NEW MEXICO

PLOT SCALE	DWG. NO.	REV
CAD NO.	001	6

LEASE: LOST TANK 4 FEDERAL #1 CTB
API #: 3001528727
LOCATED AT: SECTION 4 T22S R31E
EDDY COUNTY, NEW MEXICO
NMNM 0417696

THIS LEASE IS SUBJECT TO THE SECURITY PLAN FOR THE CARLSBAD OPERATION. THE PLAN IS LOCATED AT:
1502 W COMMERCE DR, CARLSBAD, NM 88220

I.SALES SYSTEM LOST TANK 4 FED 1:

OIL:
1. VALVE O3, O4 OPEN
2. VALVE O1, O2, C1, CLOSED
OIL SALES TO TRUCK VIA LACT.

WATER:
TO TRUCK:
1. VALVE W1, C2 CLOSED
2. VALVE W2, W4 OPEN
TO SWD VIA TRANSFER PUMP:
1. VALVE W1, C2 CLOSED
2. VALVE W2, W3 OPEN.

II. PRODUCTION PHASE LOST TANK 4 FED 1:

1. VALVE O1, O2, W1, W2, C1 *OR* C2 OPEN
2. VALVE O3, O4, W3, W4 CLOSED

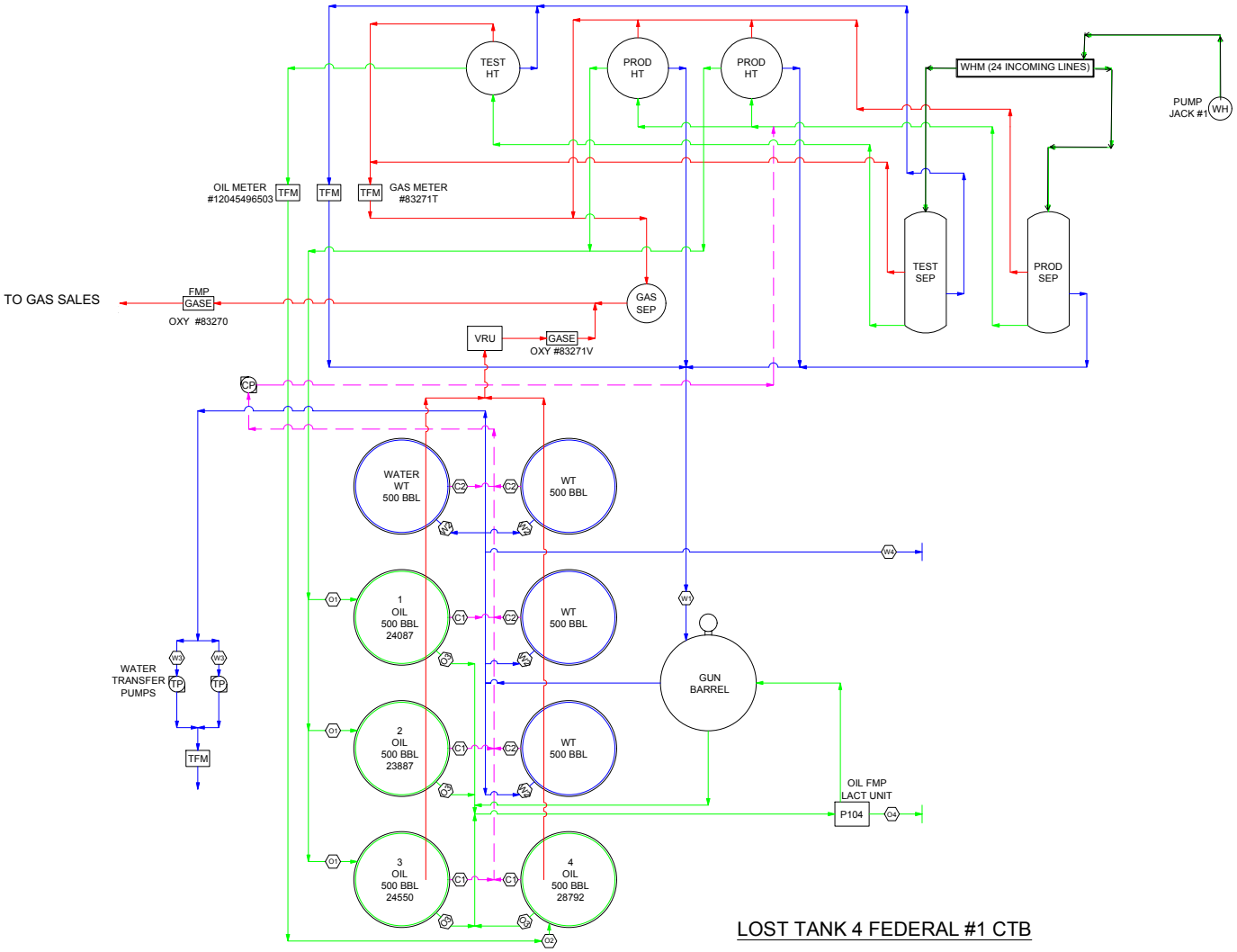

LOST TANK 4 FEDERAL #1 CTB

WELLS INTO HEADER

LOST TANK 4 FEDERAL #001 30-015-28727
LOST TANK 4 FEDERAL #002 30-015-29611
LOST TANK 4 FEDERAL #003 30-015-28617
LOST TANK 4 FEDERAL #005 30-015-28732
LOST TANK 4 FEDERAL #006 30-015-28733
LOST TANK 4 FEDERAL #007 30-015-30414
LOST TANK 4 FEDERAL #008 30-015-37923
LOST TANK 4 FEDERAL #009 30-015-37953
LOST TANK 4 FEDERAL #011 30-015-37954
LOST TANK 4 FEDERAL #012 30-015-37955
LOST TANK 4 FEDERAL #013 30-015-37956
LOST TANK 4 FEDERAL #014 30-015-37893
LOST TANK 4 FEDERAL #015 30-015-37894
LOST TANK 4 FEDERAL #016 30-015-37953
LOST TANK 4 FEDERAL #017 30-015-37598
LOST TANK 4 FEDERAL #018 30-015-37895
LOST TANK 4 FEDERAL #019 30-015-37896
LOST TANK 4 FEDERAL #020 30-015-34918 OIL & WATER ONLY

LOST TANK 4 FEDERAL #023 30-015-40755 OIL & WATER ONLY

Oxy USA INC
A subsidiary of Occidental Petroleum Corporation

LOST TANK 4 FEDERAL 1
BATTERY

LOST TANK 4 FEDERAL 20
SATELLITE
H 04 T22S R31E

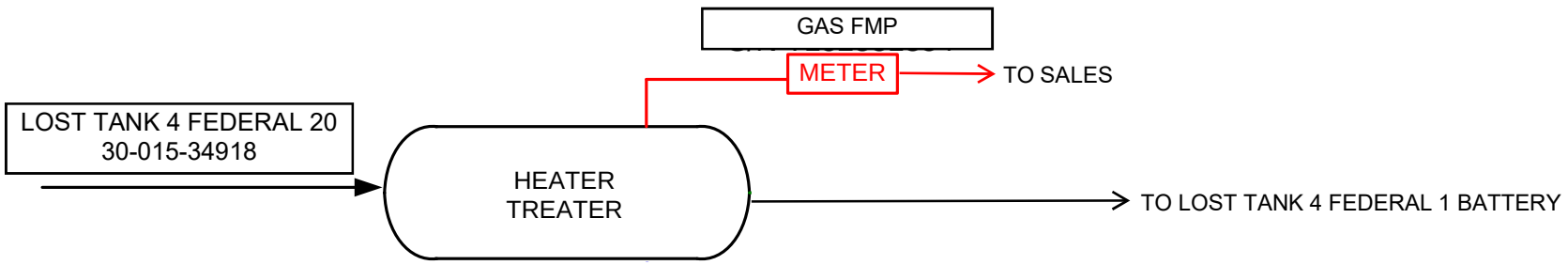

PRODUCTION MIX
OIL
GAS
WATER
EQUIPMENT

REVISION BLOCK

NO.	DATE	DESCRIPTION	BY
0		PRELIMINARY DRAFT	KAO
1		REVISION	JC
2		COMMINGLE APPLICATION	TS

OXY USA INC

PROCESS FLOW DIAGRAM
LOST TANK 4 FEDERAL 20

LOST TANK 4 FEDERAL 23
SATELLITE
G 04 T22S R31E

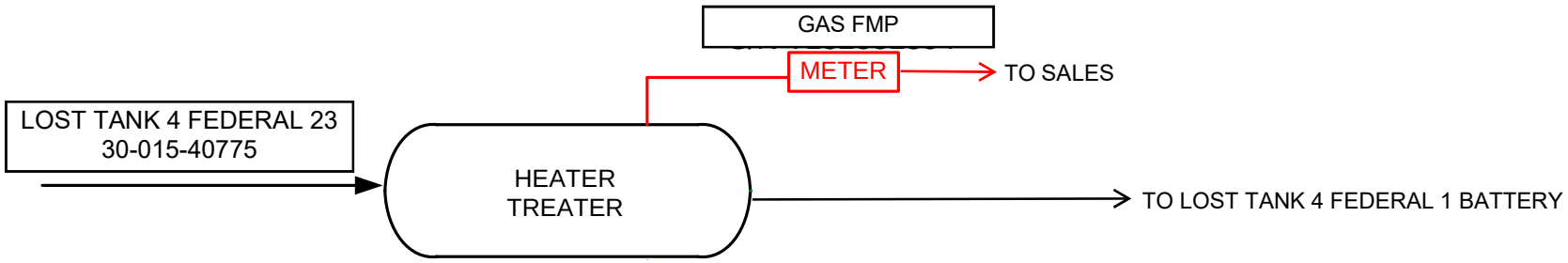

PRODUCTION MIX
OIL
GAS
WATER
EQUIPMENT

REVISION BLOCK

NO.	DATE	DESCRIPTION	BY
0		PRELIMINARY DRAFT	KAO
1		REVISION	JC
2		COMMINGLE APPLICATION	TS

OXY USA INC

PROCESS FLOW DIAGRAM
LOST TANK 4 FEDERAL 23

LOST TANK 33 FEDERAL 4 BATTERY

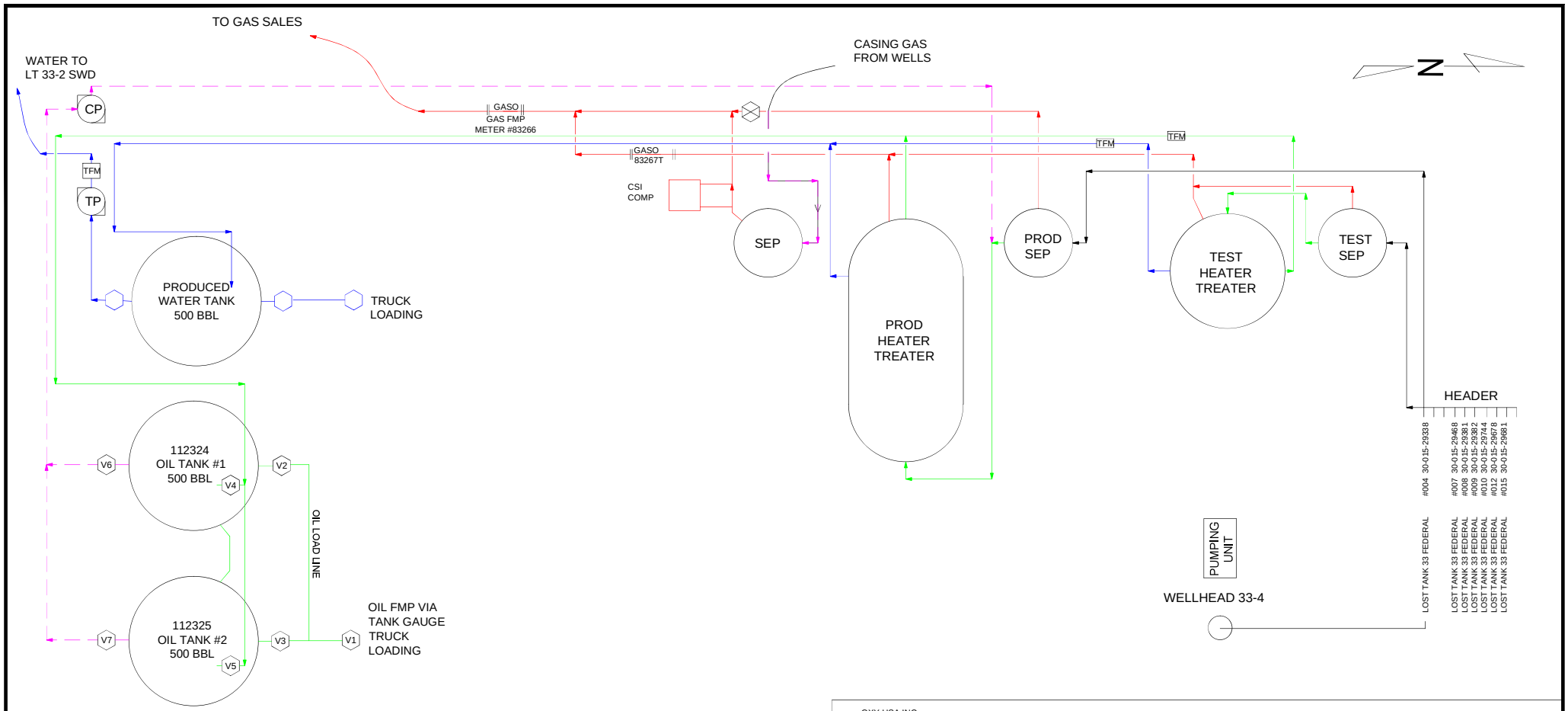

LOST TANK 33 FEDERAL #004 30-015-29338

LOST TANK 33 FEDERAL #007 30-015-29468
LOST TANK 33 FEDERAL #008 30-015-29381
LOST TANK 33 FEDERAL #009 30-015-29382
LOST TANK 33 FEDERAL #010 30-015-29744
LOST TANK 33 FEDERAL #012 30-015-29678
LOST TANK 33 FEDERAL #015 30-015-29681

OXY USA INC
LOST TANK 33 FEDERAL #4
SECTION 33 T21S R31E EDDY
COUNTY, NM
NMNM 096231

THIS LEASE IS SUBJECT TO THE SECURITY PLAN FOR THE CARLSBAD OPERATION. THE PLAN IS LOCATED AT:
1502 W COMMERCE DR, CARLSBAD, NM 88220

I.SALES SYSTEM: OPEN

OIL SALES BY TANK GAUGE VIA TANK TRUCK

II. PRODUCTION PHASE (OT#1)

1. VALVE 2 CLOSED
2. VALVE 4 OPEN
3. VALVE 5 CLOSED
4. VALVE 6 CLOSED

III. PRODUCTION PHASE (OT#2)

1. VALVE 3 CLOSED
2. VALVE 5 OPEN
3. VALVE 7 CLOSED
4. VALVE 4 CLOSED

II. SALES PHASE (OT#1)

1. VALVE 1 OPEN
2. VALVE 6 CLOSED
3. VALVE 4 CLOSED
4. VALVE 2 OPEN

III. SALES PHASE (OT#2)

1. VALVE 1 OPEN
2. VALVE 3 OPEN
3. VALVE 5 CLOSED
4. VALVE 7 CLOSED

NOTE:

REFERENCE DRAWINGS		REVISIONS						ENGINEERING RECORD	
NO.	TITLE	NO.	DATE	DESCRIPTION	BY	CHK.	APP.	BY	DATE
		A	02-05-19		NN	SM		DRN:	
								DES:	
								CHK:	
								APP:	
								AFE No.	
								OXY ENGR.	
								PROJ. ENGR:	
								SCALE: NONE	

Oxy USA INC
A subsidiary of Occidental Petroleum Corporation

SITE FACILITY DIAGRAM
LOST TANK 33-4

EDDY COUNTY, NEW MEXICO

PLOT SCALE | CAD NO. | DWG. NO. 001 | REV A

S:\allsites\Primary F&C Folder\DESIGN AND DRAFTING\STD ENGINEERING INFORMATION\REGULATORY\TEMP FILE-STILLMAN\SEPARATED BY WEEK\WEEKLOST TANK 33-4.dwg20190222.132419B

LOST TANK 35 STATE #4 BATTERY

OXY OIL & GAS

Lease: LOST TANK 35 STATE #4 BATTERY
API #: 3001531275
Located at: Section 33 T21S R31E
EDDY COUNTY, NM

This lease is subject to the security plan for the Carlsbad Operation. The plan is located at: 1502 W Commerce Dr, Carlsbad, NM 88220

I.Sales System I LOST TANK 35 STATE #4

OIL:
1. Valves C1 Open
2. Valves C2 Closed
Oil Sales to Blue Knight gathering system via LACT.

WATER:
1. Valves C1 Open
2. ValvesC2 Closed
To SWD gathering system via Transfer Pump.

GAS:
1. Test well flows through test equipment
2. Commingled wells flow through production equipment

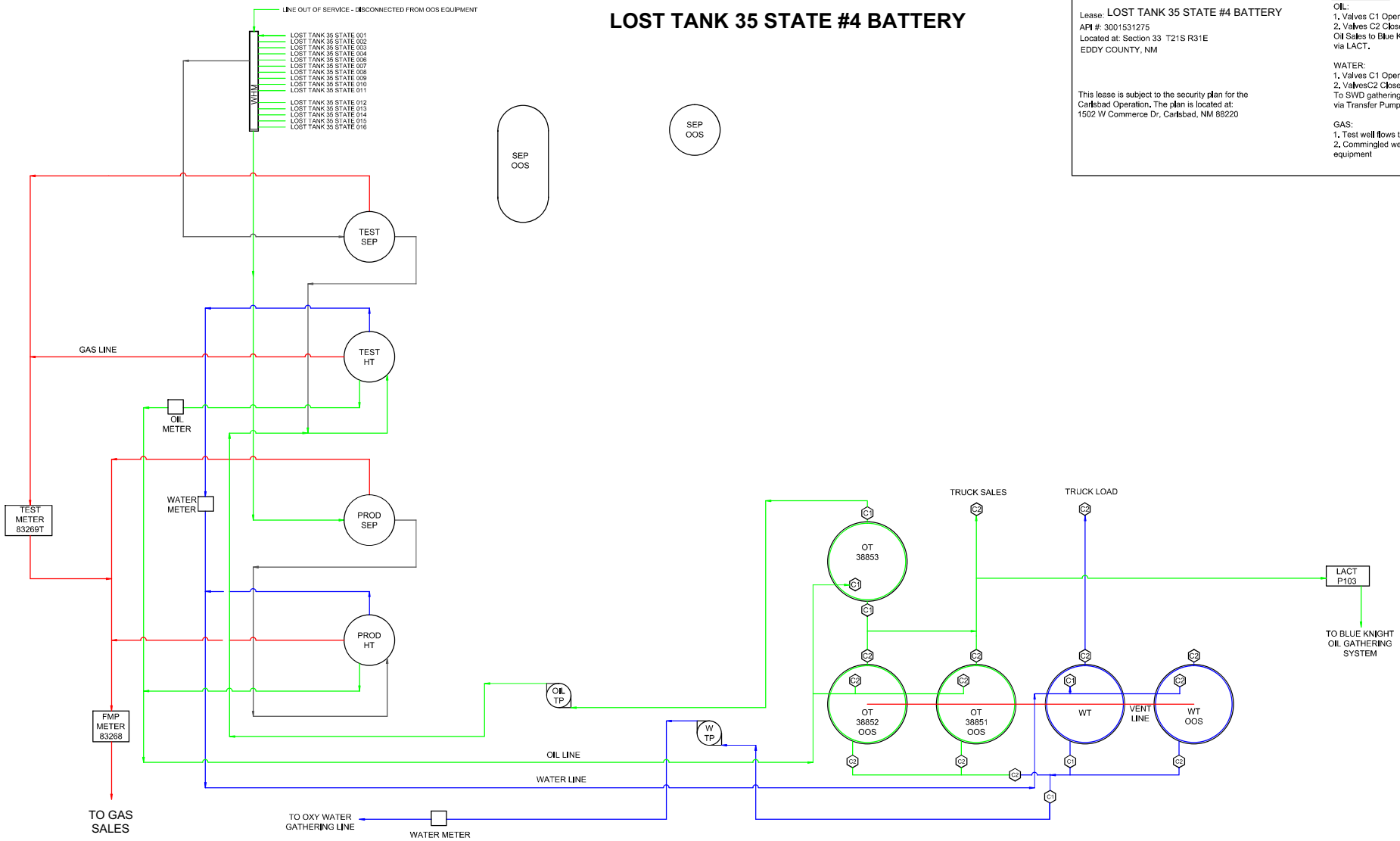

NOTE:

REFERENCE DRAWINGS		REVISIONS						ENGINEERING RECORD	
NO.	TITLE	NO.	DATE	DESCRIPTION	BY	CHK.	APP.	BY	DATE
								DRN: JDD	04/12/2016
								DES:	
								CHK:	
								APP:	
								AFE No.	
								OXY ENGR.	
								PROJ. ENGR:	
								SCALE: NONE	

OXY USA INC

SITE FACILITY DIAGRAM
LOST TANK 35 STATE #4 CTB

EDDY COUNTY, NEW MEXICO

PLOT SCALE	DWG. NO.	REV
CAD NO.	001	A

Lease: MIlls 19 state #1
API #: 30015BT0154
Located at: Section 19 T22S R32E

I. Normal operation setup
1. Valve C1 Open
2. Valve C2 Closed
Oil Sales to truck.
Water to OXY Gathering System
Gas to Oxy Gas Gathering System

This lease is subject to the security plan for the Carlsbad Operation. The plan is located at:
1502 W Commerce Dr, Carlsbad, NM 88220

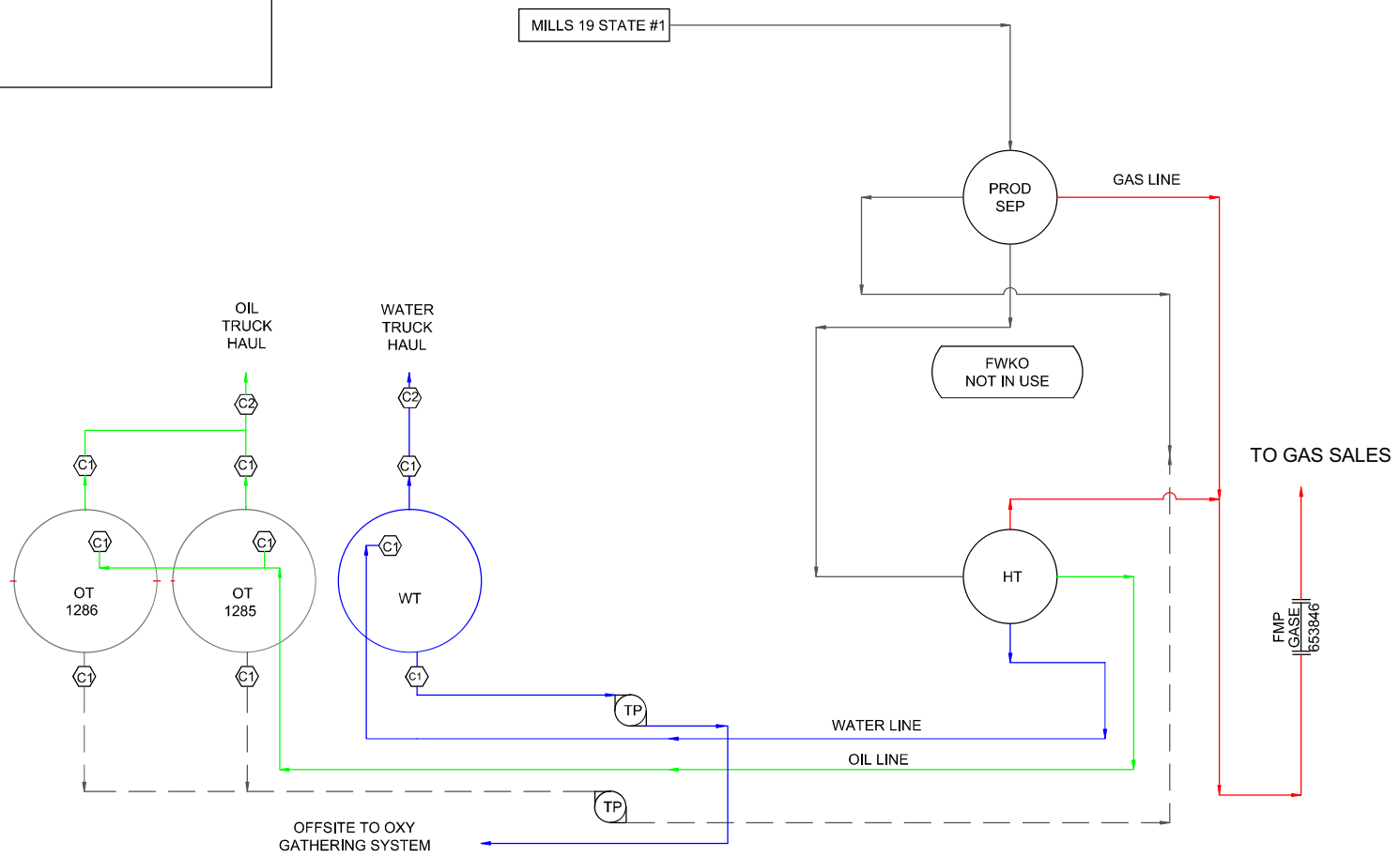

NOTE:
FACILITY SHOWN AS BUILT.

REFERENCE DRAWINGS	
NO.	TITLE

REVISIONS					
NO.	DATE	DESCRIPTION	BY	CHK.	APP.

ENGINEERING RECORD		
	BY	DATE
DRN:	JDD	4/15/2016
DES:		
CHK:		
APP:		
AFE No.		
OXY ENGR.		
PROJ. ENGR:		
SCALE:	NONE	

OXY USA INC

SITE FACILITY DIAGRAM
MILLS 19 STATE #1

EDDY COUNTY, NEW MEXICO

PLOT SCALE
CAD NO.
DWG. NO. 001
REV A

PROXIMITY 30 FEDERAL 3 BATTERY
SEC 30, T22S, R32E
LEA COUNTY, NEW MEXICO
OXY USA INC
NMNM 106915

PROXIMITY 30 FEDERAL #3 30-025-37184

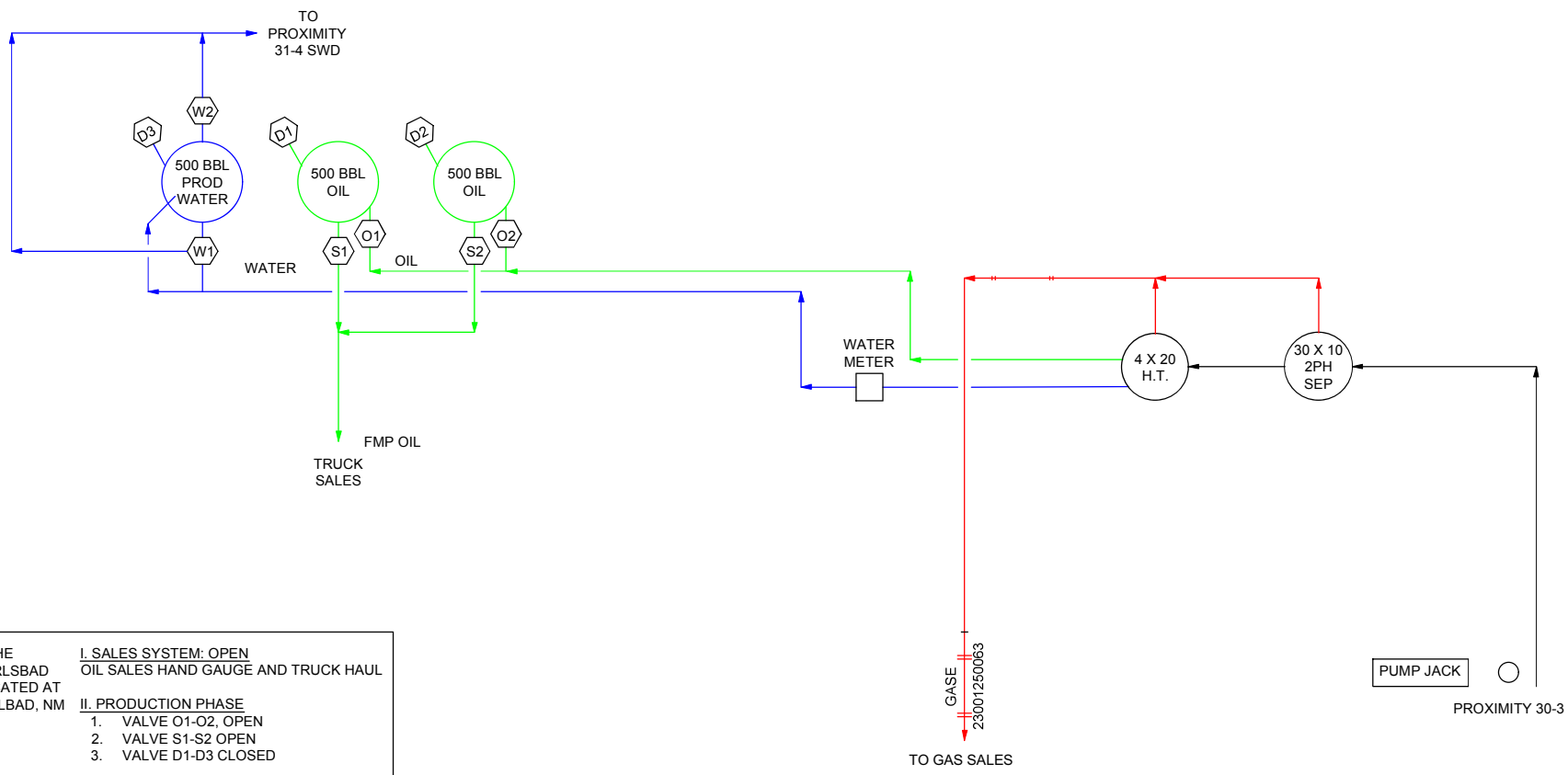

THIS LEASE IS SUBJECT TO THE SECURITY PLAN FOR THE CARLSBAD OPERATION. THE PLAN IS LOCATED AT 1502 W COMMERCE DR, CARSLBAD, NM 88220

I. SALES SYSTEM: OPEN
OIL SALES HAND GAUGE AND TRUCK HAUL

II. PRODUCTION PHASE
1. VALVE O1-O2, OPEN
2. VALVE S1-S2 OPEN
3. VALVE D1-D3 CLOSED

OXY USA INC

PROXIMITY 30 FEDERAL 3 BATTERY

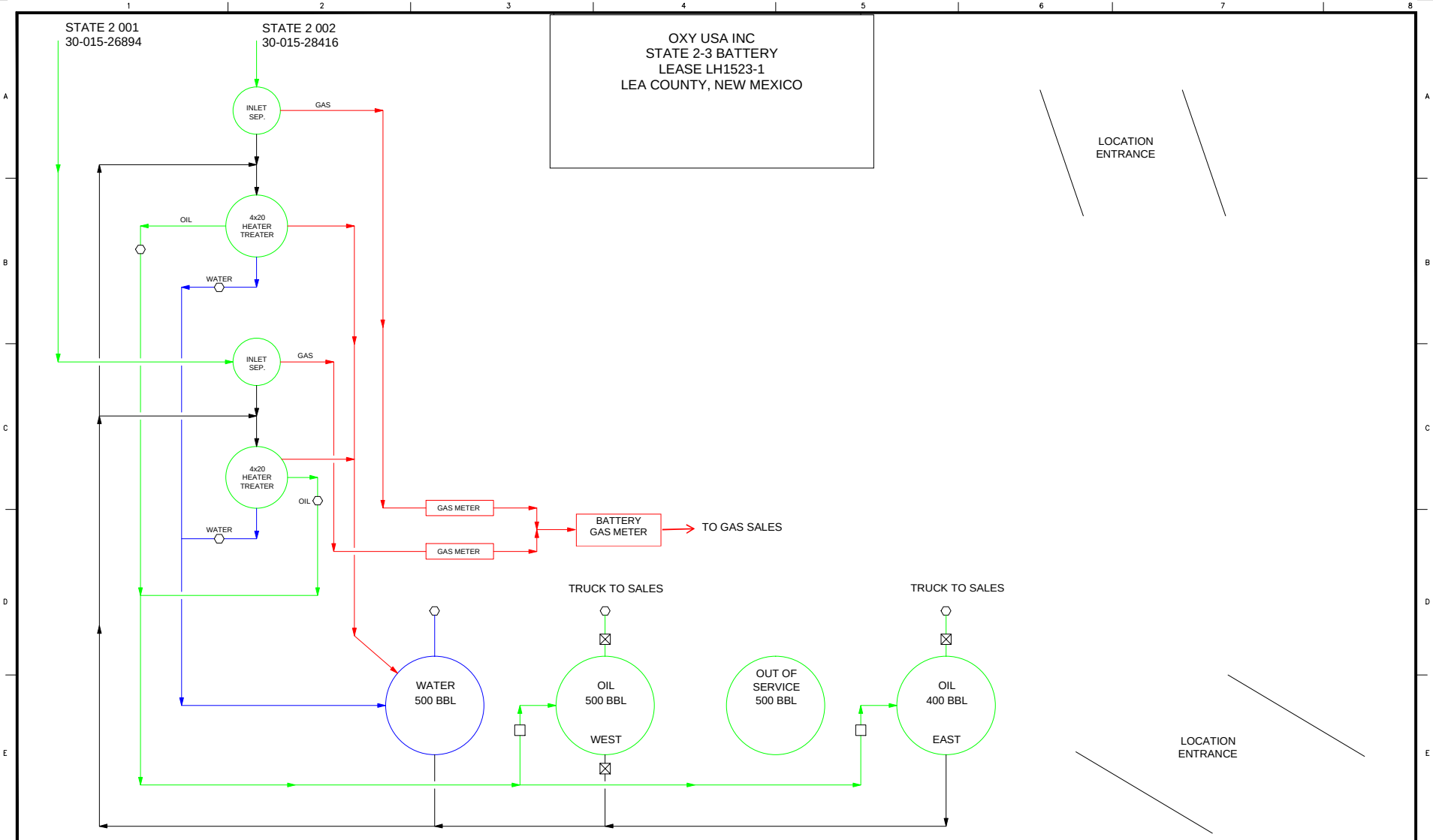

NOTES

- GAS
- OIL
- WATER
- MIXED

REV	DATE	DRAWN BY	CHECKED BY	DESCRIPTION	ONEOXY PROJECT #	PROJ. ENG.	SIGNATURE
						OXY APPROVAL	

PROJECT DRAWING REVISION

IN CASE OF DEVIATIONS A MARKED UP PRINT SHALL BE SENT TO THE PROJECT ENGINEER

REV	DATE	APP. BY	DESCRIPTION	PROJECT NUMBER	PROJ.ENG.	SPEC.ENG.
0	05/22/18	RW	APPROVED	–	SM	–
					OXY APPROVAL	

MASTER DRAWING REVISION

NOTES/REFERENCE DRAWINGS

FACILITY CODE: 30025BT0139

DISC. CODE: PRO

FACILITY TYPE: CTB

STATE 2-3 BATTERY

SCALE: NONE

CAD DRAWING

Oxy USA Inc.- Permian Resources
A subsidiary of Occidental Petroleum Corporation

DWG	ASSET	FACILITY CODE	DISC. CODE	SERIAL NUMBER	SHEET NUMBER	REV
NO	PER	30025BT0139	HES	00001	001	0

File Path: S:\Sites\Primary F&C Folder\DESIGN AND DRAFTING\STD ENGINEERING INFORMATION\REGULATORY\TEMP FILE-STILLMAN\PER-30025BT0139-HES-00001-001.dwg Saved by: DAUGHIEJ on: May, 22, 18 - 3:35 PM

LOPER 34 STATE BATTERY
PHASE 2
E 34 21S 31E
EDDY CO, NM

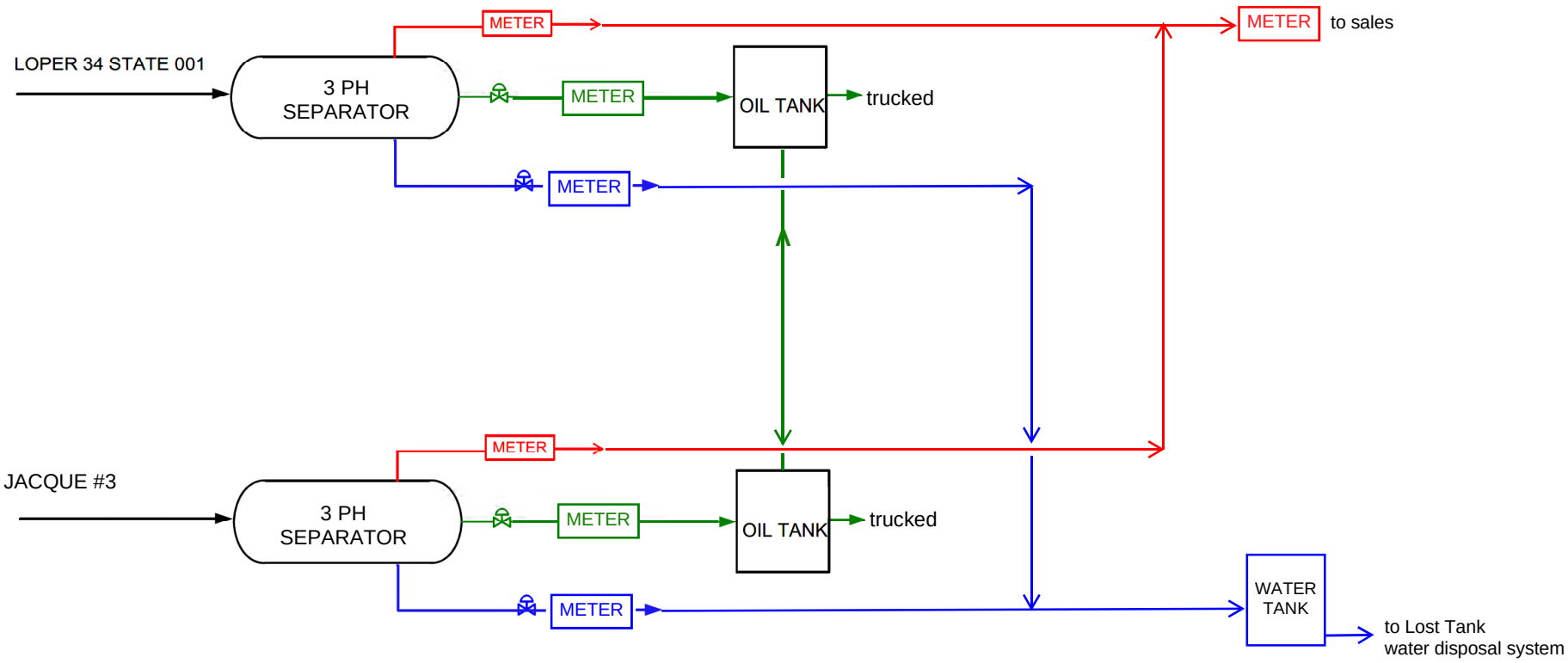

PRODUCTION MIX
OIL
GAS
WATER
EQUIPMENT

REVISION BLOCK

NO.	DATE	DESCRIPTION	BY
0		PRELIMINARY DRAFT	
1		REVISION	
2			

OXY Permian

PROCESS FLOW DIAGRAM
LOPER 34 STATE 001

C-102 Submit Electronically Via OCD Permitting	State of New Mexico Energy, Minerals & Natural Resources Department OIL CONSERVATION DIVISION	Revised July 9, 2024 Submittal Type: ☑ Initial Submittal ☐ Amended Report ☐ As Drilled

WELL LOCATION INFORMATION

API Number	Pool Code	Pool Name
30-015-56502	98123	WC-015 G-08 S233102C, WOLFCAMP

Property Code	Property Name	Well Number
335973	OLIVE WON UNIT	231H

OGRID No.	Operator Name	Ground Level Elevation
16696	OXY USA INC.	3512'

Surface Owner: ☐ State ☐ Fee ☐ Tribal ☑ Federal | Mineral Owner: ☐ State ☐ Fee ☐ Tribal ☑ Federal

Surface Location

UL	Section	Township	Range	Lot	Ft. from N/S	Ft. from E/W	Latitude	Longitude	County
K	26	22S	31E		2403' FSL	1972' FWL	32.36184291	-103.75077135	EDDY

Bottom Hole Location

UL	Section	Township	Range	Lot	Ft. from N/S	Ft. from E/W	Latitude	Longitude	County
D	23	22S	31E		20' FNL	430' FWL	32.38419317	-103.75576446	EDDY

Dedicated Acres	Infill or Defining Well	Defining Well API	Overlapping Spacing Unit (Y/N)	Consolidation Code
480.00	INFILL	32H - 30-015-56503	NO	N/A

Order Numbers. N/A | Well setbacks are under Common Ownership: ☐Yes ☒No

Kick Off Point (KOP)

UL	Section	Township	Range	Lot	Ft. from N/S	Ft. from E/W	Latitude	Longitude	County
L	26	22S	31E		2337' FSL	430' FWL	32.36166212	-103.75576561	EDDY

First Take Point (FTP)

UL	Section	Township	Range	Lot	Ft. from N/S	Ft. from E/W	Latitude	Longitude	County
E	26	22S	31E		2540' FNL	430' FWL	32.36276204	-103.75576519	EDDY

Last Take Point (LTP)

UL	Section	Township	Range	Lot	Ft. from N/S	Ft. from E/W	Latitude	Longitude	County
D	23	22S	31E		100' FNL	430' FWL	32.38397327	-103.75576438	EDDY

Unitized Area or Area of Uniform Interest	Spacing Unit Type	Ground Floor Elevation:
Y	☑ Horizontal ☐ Vertical	3512'

OPERATOR CERTIFICATIONS

I hereby certify that the information contained herein is true and complete to the best of my knowledge and belief, and, if the well is a vertical or directional well, that this organization either owns a working interest or unleased mineral interest in the land including the proposed bottom hole location or has a right to drill this well at this location pursuant to a contract with an owner of a working interest or unleased mineral interest, or to a voluntary pooling agreement or a compulsory pooling order heretofore entered by the division.

If this well is a horizontal well, I further certify that this organization has received the consent of at least one lessee or owner of a working interest or unleased mineral interest in each tract (in the target pool or formation) in which any part of the well's completed interval will be located or obtained a compulsory pooling order from the division.

Melissa Guidry 04/21/25

Signature Date

Melissa Guidry

Printed Name

melissa_guidry@oxy.com

Email Address

SURVEYOR CERTIFICATIONS

I hereby certify that the well location shown on this plat surveys made by me or under my supervision, and that the my belief.

18 **SURVEYOR CERTIFICATION**
I hereby certify that the well location shown on this plat was plotted from field notes of actual surveys made by me or under my supervision, and that the same is true and correct to the best of my belief.

Lloyd P. Short

Date of Survey: AUGUST 2, 2023

Signature and Seal of Professional Surveyor

LLOYD P. SHORT NEW MEXICO 21653 PROFESSIONAL SURVEYOR

Signature and Seal of Professional Surveyor

Certificate Number: 21653

Date of Survey: August 2, 2023

Released to Imaging: 8/15/2025 3:43:34 PM

Note: No allowable will be assigned to this completion until all interests have been consolidated or a non-standard unit has been approved by the division.

ACREAGE DEDICATION PLATS

This grid represents a standard section. You may superimpose a non-standard section, or larger area, over this grid. Operators must outline the dedicated acreage in a red box, clearly show the well surface location and bottom hole location, if it is directionally drilled, with the dimensions from the section lines in the cardinal directions. If this is a horizontal wellbore show on this plat the location of the First Take Point and Last Take Point, and the point within the Completed interval (other than the First Take Point or Last Take Point) that is closest to any outer boundary of the tract.

Surveyors shall use the latest United States government survey or dependent resurvey. Well locations will be in reference to the New Mexico Principal Meridian. If the land is not surveyed, contact the OCD Engineering Bureau. Independent subdivision surveys will not be acceptable.

16

BHL (NAD83)
X:719627.67' / Y:503982.29'
LAT:32.38419317 / LON:-103.75576446

BHL (NAD27)
X:678445.35' / Y:503921.89'
LAT:32.38407065 / LON:-103.75527502

LTP (NAD83)
X:719628.13' / Y:503902.30'
LAT:32.38397327 / LON:-103.75576438

LTP (NAD27)
X:678445.80' / Y:503841.89'
LAT:32.38385075 / LON:-103.75527495

PPP-1 (NAD83)
X:719655.90' / Y:498725.66'
LAT:32.36974385 / LON:-103.75576493

PPP-1 (NAD27)
X:678473.42' / Y:498665.39'
LAT:32.36962125 / LON:-103.75527608

FTP (NAD83)
X:719669.53' / Y:496185.70'
LAT:32.36276204 / LON:-103.75576519

FTP (NAD27)
X:678486.97' / Y:496125.50'
LAT:32.36263940 / LON:-103.75527662

KOP (NAD83)
X:719671.56' / Y:495785.55'
LAT:32.36166212 / LON:-103.75576561

KOP (NAD27)
X:678488.99' / Y:495725.36'
LAT:32.36153947 / LON:-103.75527708

SHL (NAD83)
X:721213.29' / Y:495859.68'
LAT:32.36184291 / LON:-103.75077135

SHL (NAD27)
X:680030.72' / Y:495799.49'
LAT:32.36172024 / LON:-103.75028293

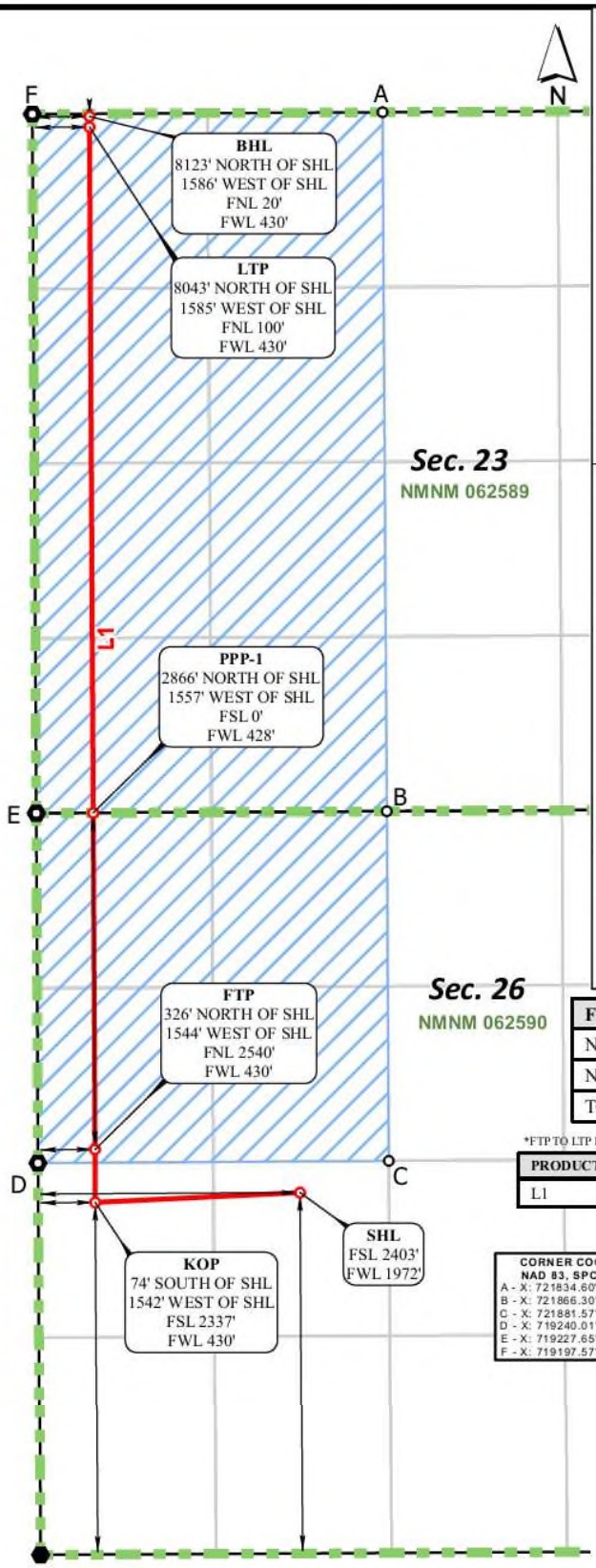

17 ***OPERATOR CERTIFICATION***

I hereby certify that the information contained herein is true and complete to the best of my knowledge and belief, and that this organization either owns a working interest or unleased mineral interest in the land including the proposed bottom hole location or has a right to drill this well at this location pursuant to a contract with an owner of such a mineral or working interest, or to a voluntary pooling agreement or a compulsory pooling order heretofore entered by the division.

Roni Mathew 3/26/24
Signature Date

RONI MATHEW
Printed Name

roni_mathew@oxy.com
E-mail Address

18 ***SURVEYOR CERTIFICATION***

I hereby certify that the well location shown on this plat was plotted from field notes of actual surveys made by me or under my supervision, and that the same is true and correct to the best of my belief.

Date of Survey: AUGUST 2, 2023
Signature and Seal of Professional Surveyor

LLOYD P. SHORT
NEW MEXICO
21653
PROFESSIONAL SURVEYOR

FEDERAL LEASE ID	LENGTH
NMNM062590	2540.00'
NMNM062589	5176.71'
TOTAL	7716.71'

*FTP TO LTP LINE BEARINGS

PRODUCTION LINE	BEARING/LENGTH
L1	N00°18'27"W ~ 7716.71'

CORNER COORDINATES NAD 83, SPCS NM EAST	CORNER COORDINATES NAD 27, SPCS NM EAST
A - X: 721834.60' / Y: 504014.16'	A - X: 680652.27' / Y: 503953.75'
B - X: 721866.30' / Y: 498738.37'	B - X: 680683.81' / Y: 498678.10'
C - X: 721881.57' / Y: 496099.59'	C - X: 680699.00' / Y: 496039.39'
D - X: 719240.01' / Y: 496083.00'	D - X: 678057.45' / Y: 496022.80'
E - X: 719227.65' / Y: 498723.20'	E - X: 678045.17' / Y: 498662.93'
F - X: 719197.57' / Y: 503999.98'	F - X: 678015.24' / Y: 503939.58'

Drill Line Events · Section Corners · Drill Line · Dimension Lines · Federal Leases · HSU · HSU Corners

SHEET 1 OF 1
JOB No. OXY_0032_OW_10753
REV 0 TCS 7/31/2023

All bearings and coordinates refer to New Mexico State Plane coordinate system, East Zone, U.S. Survey Feet.

Distances/areas relative to NAD 83 Combined Scale Factor: 0.99978405 Convergence Angle: 0.31759444°

C-102 Submit Electronically Via OCD Permitting	State of New Mexico Energy, Minerals & Natural Resources Department OIL CONSERVATION DIVISION	Revised July 9, 2024 Submittal Type: ☑ Initial Submittal ☐ Amended Report ☐ As Drilled

WELL LOCATION INFORMATION

API Number	Pool Code	Pool Name
30-015-56503	98123	WC-015 G-08 S233102C, WOLFCAMP

Property Code	Property Name	Well Number
335973	OLIVE WON UNIT	232H

OGRID No.	Operator Name	Ground Level Elevation
16696	OXY USA INC.	3512'

Surface Owner: ☐ State ☐ Fee ☐ Tribal ☑ Federal | Mineral Owner: ☐ State ☐ Fee ☐ Tribal ☑ Federal

Surface Location

UL	Section	Township	Range	Lot	Ft. from N/S	Ft. from E/W	Latitude	Longitude	County
K	26	22S	31E		2403' FSL	2002' FWL	32.36184256	-103.75067448	EDDY

Bottom Hole Location

UL	Section	Township	Range	Lot	Ft. from N/S	Ft. from E/W	Latitude	Longitude	County
D	23	22S	31E		20' FNL	1185' FWL	32.38419311	-103.75331872	EDDY

Dedicated Acres	Infill or Defining Well	Defining Well API	Overlapping Spacing Unit (Y/N)	Consolidation Code
480.00	DEFINING	30-015-56503	NO	N/A

Order Numbers. N/A | Well setbacks are under Common Ownership: ☐Yes ☒No

Kick Off Point (KOP)

UL	Section	Township	Range	Lot	Ft. from N/S	Ft. from E/W	Latitude	Longitude	County
L	26	22S	31E		2338' FSL	1185' FWL	32.36166489	-103.75332047	EDDY

First Take Point (FTP)

UL	Section	Township	Range	Lot	Ft. from N/S	Ft. from E/W	Latitude	Longitude	County
E	26	22S	31E		2540' FNL	1185' FWL	32.36276275	-103.75332003	EDDY

Last Take Point (LTP)

UL	Section	Township	Range	Lot	Ft. from N/S	Ft. from E/W	Latitude	Longitude	County
D	23	22S	31E		100' FNL	1185' FWL	32.38397321	-103.75331864	EDDY

Unitized Area or Area of Uniform Interest	Spacing Unit Type	Ground Floor Elevation:
N/A	☑ Horizontal ☐ Vertical	3512'

OPERATOR CERTIFICATIONS

I hereby certify that the information contained herein is true and complete to the best of my knowledge and belief, and, if the well is a vertical or directional well, that this organization either owns a working interest or unleased mineral interest in the land including the proposed bottom hole location or has a right to drill this well at this location pursuant to a contract with an owner of a working interest or unleased mineral interest, or to a voluntary pooling agreement or a compulsory pooling order heretofore entered by the division.

If this well is a horizontal well, I further certify that this organization has received the consent of at least one lessee or owner of a working interest or unleased mineral interest in each tract (in the target pool or formation) in which any part of the well's completed interval will be located or obtained a compulsory pooling order from the division.

Melissa Guidry 04/21/25

Signature Date

Melissa Guidry

Printed Name

melissa_guidry@oxy.com

Email Address

SURVEYOR CERTIFICATIONS

I hereby certify that the well location shown on this plat surveys made by me or under my supervision, and that the my belief.

Signature and Seal of Professional Surveyor

Certificate Number: 21653

Date of Survey: August 2, 2023

18 ***SURVEYOR CERTIFICATION***
I hereby certify that the well location shown on this plat was plotted from field notes of actual surveys made by me or under my supervision, and that the same is true and correct to the best of my belief.

Lloyd P. Short

Date of Survey: AUGUST 2, 2023
Signature and Seal of Professional Surveyor

LLOYD P. SHORT NEW MEXICO 21653 PROFESSIONAL SURVEYOR

Note: No allowable will be assigned to this completion until all interests have been consolidated or a non-standard unit has been approved by the division.

ACREAGE DEDICATION PLATS

This grid represents a standard section. You may superimpose a non-standard section, or larger area, over this grid. Operators must outline the dedicated acreage in a red box, clearly show the well surface location and bottom hole location, if it is directionally drilled, with the dimensions from the section lines in the cardinal directions. If this is a horizontal wellbore show on this plat the location of the First Take Point and Last Take Point, and the point within the Completed interval (other than the First Take Point or Last Take Point) that is closest to any outer boundary of the tract.

Surveyors shall use the latest United States government survey or dependent resurvey. Well locations will be in reference to the New Mexico Principal Meridian. If the land is not surveyed, contact the OCD Engineering Bureau. Independent subdivision surveys will not be acceptable.

16

BHL (NAD83)
X:720382.66' / Y:503986.35'
LAT:32.38419311 / LON:-103.75331872

BHL (NAD27)
X:679200.34' / Y:503925.95'
LAT:32.38407057 / LON:-103.75282934

LTP (NAD83)
X:720383.12' / Y:503906.36'
LAT:32.38397321 / LON:-103.75331864

LTP (NAD27)
X:679200.79' / Y:503845.95'
LAT:32.38385067 / LON:-103.75282927

PPP-1 (NAD83)
X:720410.89' / Y:498730.00'
LAT:32.36974456 / LON:-103.75331958

PPP-1 (NAD27)
X:679228.41' / Y:498669.73'
LAT:32.36962194 / LON:-103.75283078

FTP (NAD83)
X:720424.52' / Y:496190.04'
LAT:32.36276275 / LON:-103.75332003

FTP (NAD27)
X:679241.96' / Y:496129.84'
LAT:32.36264010 / LON:-103.75283151

KOP (NAD83)
X:720426.54' / Y:495790.64'
LAT:32.36166489 / LON:-103.75332047

KOP (NAD27)
X:679243.97' / Y:495730.45'
LAT:32.36154223 / LON:-103.75283200

SHL (NAD83)
X:721243.20' / Y:495859.72'
LAT:32.36184256 / LON:-103.75067448

SHL (NAD27)
X:680060.63' / Y:495799.52'
LAT:32.36171990 / LON:-103.75018606

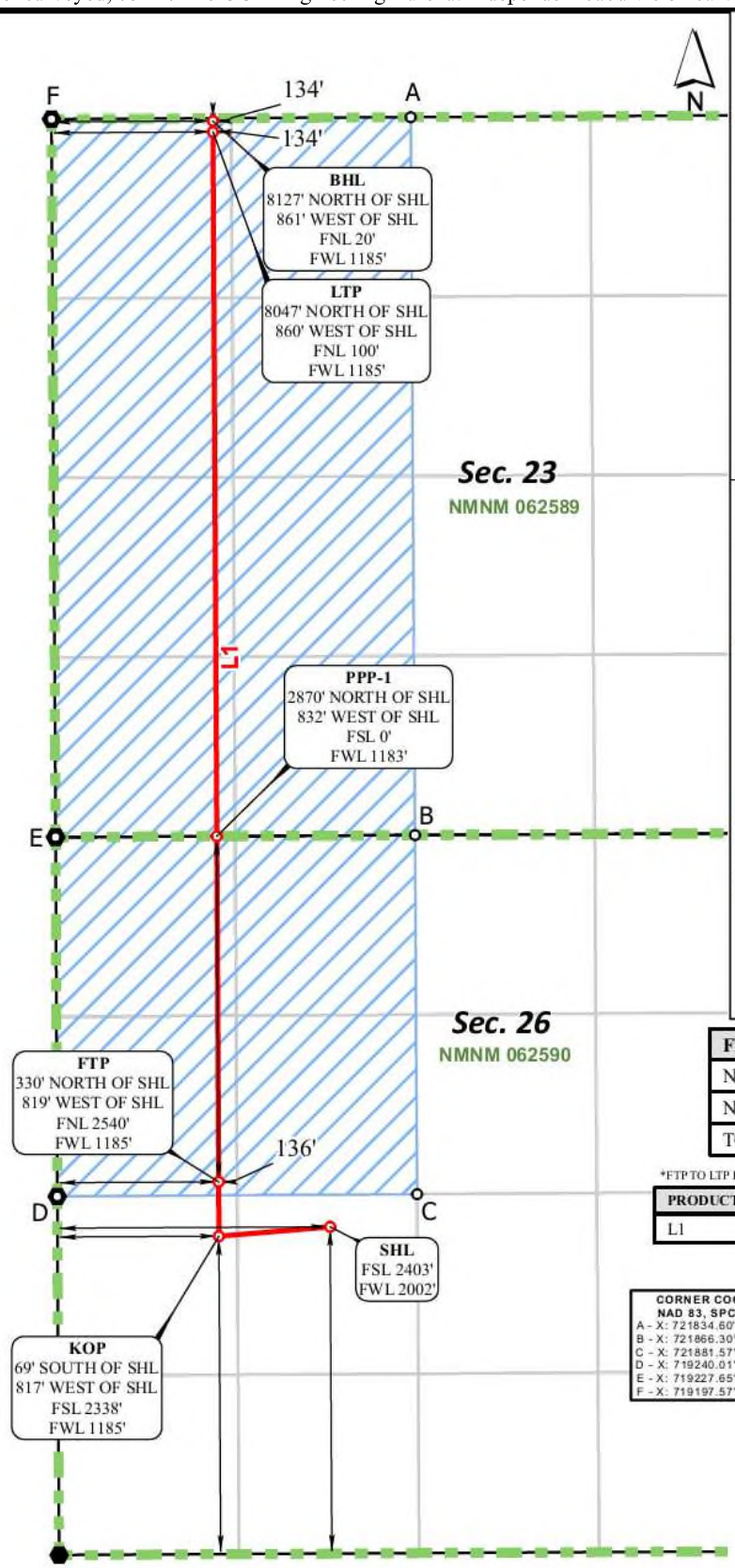

17 ***OPERATOR CERTIFICATION***

I hereby certify that the information contained herein is true and complete to the best of my knowledge and belief, and that this organization either owns a working interest or unleased mineral interest in the land including the proposed bottom hole location or has a right to drill this well at this location pursuant to a contract with an owner of such a mineral or working interest, or to a voluntary pooling agreement or a compulsory pooling order heretofore entered by the division.

Roni Mathew 3/26/2024
Signature Date

RONI MATHEW
Printed Name

roni_mathew@oxy.com
E-mail Address

18 ***SURVEYOR CERTIFICATION***

I hereby certify that the well location shown on this plat was plotted from field notes of actual surveys made by me or under my supervision, and that the same is true and correct to the best of my belief.

Lloyd P. Short

Date of Survey: AUGUST 2, 2023
Signature and Seal of Professional Surveyor

LLOYD P. SHORT
NEW MEXICO
21653
PROFESSIONAL SURVEYOR

FEDERAL LEASE ID	LENGTH
NMNM062590	2540.00'
NMNM062589	5176.43'
TOTAL	7716.43'

*FTP TO LTP LINE BEARINGS

PRODUCTION LINE	BEARING/LENGTH
L1	N00°18'27"W ~ 7716.43'

CORNER COORDINATES NAD 83, SPCS NM EAST	CORNER COORDINATES NAD 27, SPCS NM EAST
A - X: 721834.60' / Y: 504014.16'	A - X: 680652.27' / Y: 503953.75'
B - X: 721866.30' / Y: 498738.37'	B - X: 680683.81' / Y: 498678.10'
C - X: 721881.57' / Y: 496099.59'	C - X: 680699.00' / Y: 496039.39'
D - X: 719240.01' / Y: 496083.00'	D - X: 678057.45' / Y: 496022.80'
E - X: 719227.65' / Y: 498723.20'	E - X: 678045.17' / Y: 498662.93'
F - X: 719197.57' / Y: 503999.98'	F - X: 678015.24' / Y: 503939.58'

Drill Line Events · Section Corners · Drill Line · Dimension Lines · Federal Leases · HSU · HSU Corners

SHEET 1 OF 1
JOB No. OXY_0032_OW_10754
REV 0 TCS 7/31/2023

All bearings and coordinates refer to New Mexico State Plane coordinate system, East Zone, U.S. Survey Feet.

Released to Imaging: 10/7/2025 2:59:47 PM e Factor: 0.99978405 Convergence Angle: 0.31759444°

C-102 Submit Electronically Via OCD Permitting	State of New Mexico Energy, Minerals & Natural Resources Department OIL CONSERVATION DIVISION	Revised July 9, 2024 Submittal Type: ☐ Initial Submittal ☒ Amended Report ☐ As Drilled

WELL LOCATION INFORMATION

API Number	Pool Code	Pool Name
30-015-56509	98123	WC-015 G-08 S233102C, WOLFCAMP

Property Code	Property Name	Well Number
337187	OLIVE WON UNIT	233H

OGRID No.	Operator Name	Ground Level Elevation
16696	OXY USA INC.	3514'

Surface Owner: ☐ State ☐ Fee ☐ Tribal ☑ Federal | Mineral Owner: ☐ State ☐ Fee ☐ Tribal ☑ Federal

Surface Location

UL	Section	Township	Range	Lot	Ft. from N/S	Ft. from E/W	Latitude	Longitude	County
J	26	22S	31E		2238' FSL	2052' FEL	32.36138890	-103.74670804	EDDY

Bottom Hole Location

UL	Section	Township	Range	Lot	Ft. from N/S	Ft. from E/W	Latitude	Longitude	County
C	23	22S	31E		20' FNL	1940' FWL	32.38419299	-103.75087297	EDDY

Dedicated Acres	Infill or Defining Well	Defining Well API	Overlapping Spacing Unit (Y/N)	Consolidation Code
480.00	INFILL	32H - 30-15-56503	NO	N/A

Order Numbers. N/A | Well setbacks are under Common Ownership: ☐Yes ☒No

Kick Off Point (KOP)

UL	Section	Township	Range	Lot	Ft. from N/S	Ft. from E/W	Latitude	Longitude	County
K	26	22S	31E		2338' FSL	1940' FWL	32.36166486	-103.75087533	EDDY

First Take Point (FTP)

UL	Section	Township	Range	Lot	Ft. from N/S	Ft. from E/W	Latitude	Longitude	County
F	26	22S	31E		2539' FNL	1940' FWL	32.36276616	-103.75087486	EDDY

Last Take Point (LTP)

UL	Section	Township	Range	Lot	Ft. from N/S	Ft. from E/W	Latitude	Longitude	County
C	23	22S	31E		100' FNL	1940' FWL	32.38397309	-103.75087291	EDDY

Unitized Area or Area of Uniform Interest	Spacing Unit Type	Ground Floor Elevation:
Y	☑ Horizontal ☐ Vertical	3514'

OPERATOR CERTIFICATIONS

I hereby certify that the information contained herein is true and complete to the best of my knowledge and belief, and, if the well is a vertical or directional well, that this organization either owns a working interest or unleased mineral interest in the land including the proposed bottom hole location or has a right to drill this well at this location pursuant to a contract with an owner of a working interest or unleased mineral interest, or to a voluntary pooling agreement or a compulsory pooling order heretofore entered by the division.

If this well is a horizontal well, I further certify that this organization has received the consent of at least one lessee or owner of a working interest or unleased mineral interest in each tract (in the target pool or formation) in which any part of the well's completed interval will be located or obtained a compulsory pooling order from the division.

Melissa Guidry 04/22/25

Signature Date

Melissa Guidry

Printed Name

melissa_guidry@oxy.com

Email Address

SURVEYOR CERTIFICATIONS

I hereby certify that the well location shown on this plat was plotted from field notes of actual surveys made by me or under my supervision, and that the [illegible] of my belief.

18 **SURVEYOR CERTIFICATION**
I hereby certify that the well location shown on this plat was plotted from field notes of actual surveys made by me or under my supervision, and that the same is true and correct to the best of my belief.

Lloyd P. Short

Date of Survey: AUGUST 3, 2023

Signature and Seal of Professional Surveyor

LLOYD P. SHORT NEW MEXICO 21653 PROFESSIONAL SURVEYOR

Signature and Seal of Professional Surveyor

Certificate Number: 21653

Date of Survey: August 3, 2023

Note: No allowable will be assigned to this completion until all interests have been consolidated or a non-standard unit has been approved by the division.

ACREAGE DEDICATION PLATS

This grid represents a standard section. You may superimpose a non-standard section, or larger area, over this grid. Operators must outline the dedicated acreage in a red box, clearly show the well surface location and bottom hole location, if it is directionally drilled, with the dimensions from the section lines in the cardinal directions. If this is a horizontal wellbore show on this plat the location of the First Take Point and Last Take Point, and the point within the Completed interval (other than the First Take Point or Last Take Point) that is closest to any outer boundary of the tract.

Surveyors shall use the latest United States government survey or dependent resurvey. Well locations will be in reference to the New Mexico Principal Meridian. If the land is not surveyed, contact the OCD Engineering Bureau. Independent subdivision surveys will not be acceptable.

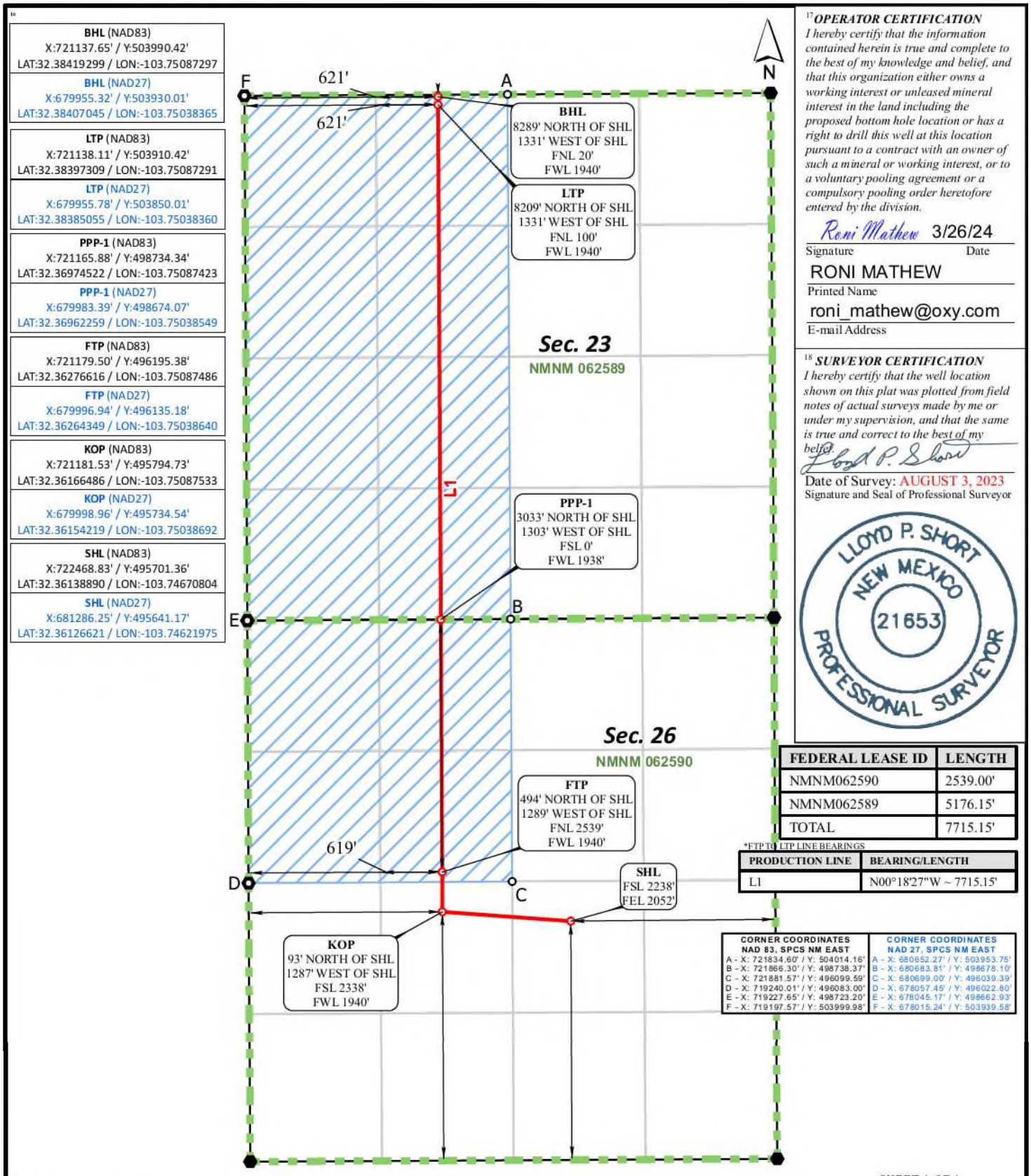

C-102 Submit Electronically Via OCD Permitting	State of New Mexico Energy, Minerals & Natural Resources Department OIL CONSERVATION DIVISION	Revised July 9, 2024 Submittal Type: ☑ Initial Submittal ☐ Amended Report ☐ As Drilled

WELL LOCATION INFORMATION

API Number	Pool Code	Pool Name	
30-015 -56510	98123	WC-015 G-08 S233102C, WOLFCAMP	
Property Code: 337187	Property Name: EVIL OLIVE 26-23 FEDERAL COM		Well Number: 34H
OGRID No.: 16696	Operator Name: OXY USA INC.		Ground Level Elevation: 3514'
Surface Owner: ☐ State ☐ Fee ☐ Tribal ☑ Federal		Mineral Owner: ☐ State ☐ Fee ☐ Tribal ☑ Federal	

Surface Location

UL	Section	Township	Range	Lot	Ft. from N/S	Ft. from E/W	Latitude	Longitude	County
J	26	22S	31E		2237' FSL	2022' FEL	32.36138826	-103.74661103	EDDY

Bottom Hole Location

UL	Section	Township	Range	Lot	Ft. from N/S	Ft. from E/W	Latitude	Longitude	County
B	23	22S	31E		20' FNL	2554' FEL	32.38419282	-103.74834576	EDDY

Dedicated Acres	Infill or Defining Well	Defining Well API	Overlapping Spacing Unit (Y/N)	Consolidation Code
480.00	INFILL	PENDING-EVIL OLIVE 26-23 FED COM 32H	NO	
Order Numbers.			Well setbacks are under Common Ownership: ☐Yes ☐No	

Kick Off Point (KOP)

UL	Section	Township	Range	Lot	Ft. from N/S	Ft. from E/W	Latitude	Longitude	County
J	26	22S	31E		2339' FSL	2554' FEL	32.36166753	-103.74833342	EDDY

First Take Point (FTP)

UL	Section	Township	Range	Lot	Ft. from N/S	Ft. from E/W	Latitude	Longitude	County
G	26	22S	31E		2539' FNL	2554' FEL	32.36276679	-103.74833605	EDDY

Last Take Point (LTP)

UL	Section	Township	Range	Lot	Ft. from N/S	Ft. from E/W	Latitude	Longitude	County
B	23	22S	31E		100' FNL	2554' FEL	32.38397292	-103.74834554	EDDY

Unitized Area or Area of Uniform Interest	Spacing Unit Type ☑ Horizontal ☐ Vertical	Ground Floor Elevation: 3514'

OPERATOR CERTIFICATIONS

I hereby certify that the information contained herein is true and complete to the best of my knowledge and belief, and, if the well is a vertical or directional well, that this organization either owns a working interest or unleased mineral interest in the land including the proposed bottom hole location or has a right to drill this well at this location pursuant to a contract with an owner of a working interest or unleased mineral interest, or to a voluntary pooling agreement or a compulsory pooling order heretofore entered by the division.

If this well is a horizontal well, I further certify that this organization has received the consent of at least one lessee or owner of a working interest or unleased mineral interest in each tract (in the target pool or formation) in which any part of the well's completed interval will be located or obtained a compulsory pooling order from the division.

Sara Guthrie — Signature
3/4/2025 — Date
Sara Guthrie — Printed Name
sara_guthrie@oxy.com — Email Address

SURVEYOR CERTIFICATIONS

I hereby certify that the well location shown on this plat surveys made by me or under my supervision, and that the my belief.

Signature and Seal of Professional Surveyor

Certificate Number: 21653

Date of Survey: August 3, 2023

18 **SURVEYOR CERTIFICATION**
I hereby certify that the well location shown on this plat was plotted from field notes of actual surveys made by me or under my supervision, and that the same is true and correct to the best of my belief.
Lloyd P. Short
Date of Survey: AUGUST 3, 2023
Signature and Seal of Professional Surveyor

LLOYD P. SHORT NEW MEXICO 21653 PROFESSIONAL SURVEYOR

Note: No allowable will be assigned to this completion until all interests have been consolidated or a non-standard unit has been approved by the division.

ACREAGE DEDICATION PLATS

This grid represents a standard section. You may superimpose a non-standard section, or larger area, over this grid. Operators must outline the dedicated acreage in a red box, clearly show the well surface location and bottom hole location, if it is directionally drilled, with the dimensions from the section lines in the cardinal directions. If this is a horizontal wellbore show on this plat the location of the First Take Point and Last Take Point, and the point within the Completed interval (other than the First Take Point or Last Take Point) that is closest to any outer boundary of the tract.

Surveyors shall use the latest United States government survey or dependent resurvey. Well locations will be in reference to the New Mexico Principal Meridian. If the land is not surveyed, contact the OCD Engineering Bureau. Independent subdivision surveys will not be acceptable.

[16]

BHL (NAD83)
X:721917.79' / Y:503994.61'
LAT:32.38419282 / LON:-103.74834576

BHL (NAD27)
X:680735.46' / Y:503934.20'
LAT:32.38407027 / LON:-103.74785651

LTP (NAD83)
X:721918.30' / Y:503914.61'
LAT:32.38397292 / LON:-103.74834554

LTP (NAD27)
X:680735.96' / Y:503854.21'
LAT:32.38385036 / LON:-103.74785629

PPP-1 (NAD83)
X:721948.56' / Y:498738.84'
LAT:32.36974585 / LON:-103.74833918

PPP-1 (NAD27)
X:680766.07' / Y:498678.57'
LAT:32.36962321 / LON:-103.74785051

FTP (NAD83)
X:721963.40' / Y:496199.89'
LAT:32.36276679 / LON:-103.74833605

FTP (NAD27)
X:680780.84' / Y:496139.68'
LAT:32.36264412 / LON:-103.74784766

KOP (NAD83)
X:721966.40' / Y:495799.98'
LAT:32.36166753 / LON:-103.74833342

KOP (NAD27)
X:680783.82' / Y:495739.79'
LAT:32.36154485 / LON:-103.74784508

SHL (NAD83)
X:722498.78' / Y:495701.30'
LAT:32.36138826 / LON:-103.74661103

SHL (NAD27)
X:681316.20' / Y:495641.10'
LAT:32.36126557 / LON:-103.74612274

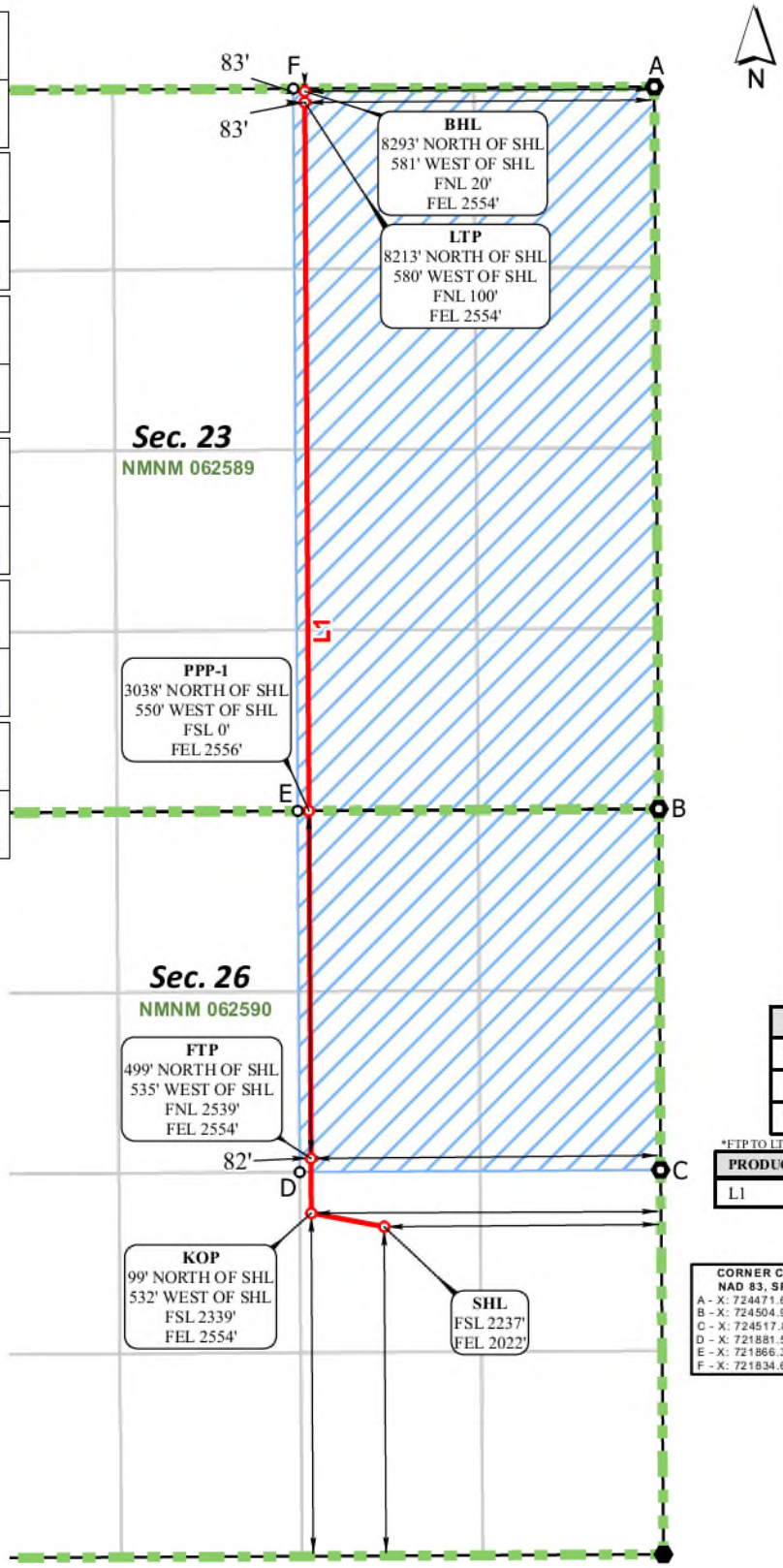

[17] ***OPERATOR CERTIFICATION***

I hereby certify that the information contained herein is true and complete to the best of my knowledge and belief, and that this organization either owns a working interest or unleased mineral interest in the land including the proposed bottom hole location or has a right to drill this well at this location pursuant to a contract with an owner of such a mineral or working interest, or to a voluntary pooling agreement or a compulsory pooling order heretofore entered by the division.

Roni Mathew 3/26/24
Signature Date

RONI MATHEW
Printed Name

roni_mathew@oxy.com
E-mail Address

[18] ***SURVEYOR CERTIFICATION***

I hereby certify that the well location shown on this plat was plotted from field notes of actual surveys made by me or under my supervision, and that the same is true and correct to the best of my belief.

Date of Survey: AUGUST 3, 2023
Signature and Seal of Professional Surveyor

LLOYD P. SHORT
NEW MEXICO
21653
PROFESSIONAL SURVEYOR

FEDERAL LEASE ID	LENGTH
NMNM062590	2539.00'
NMNM062589	5175.86'
TOTAL	7714.86'

*FTP TO LTP LINE BEARINGS

PRODUCTION LINE	BEARING/LENGTH
L1	N00°20'06"W ~ 7714.86'

CORNER COORDINATES NAD 83, SPCS NM EAST	CORNER COORDINATES NAD 27, SPCS NM EAST
A - X: 724471.63' / Y: 504028.35'	A - X: 683289.28' / Y: 503967.93'
B - X: 724504.95' / Y: 498753.54'	B - X: 683322.45' / Y: 498693.27'
C - X: 724517.84' / Y: 496116.14'	C - X: 683335.27' / Y: 496055.94'
D - X: 721881.57' / Y: 496099.59'	D - X: 680699.00' / Y: 496039.39'
E - X: 721866.30' / Y: 498738.37'	E - X: 680683.81' / Y: 498678.10'
F - X: 721834.60' / Y: 504014.16'	F - X: 680652.27' / Y: 503953.75'

Drill Line Events · Section Corners · Drill Line · Dimension Lines · Federal Leases · HSU · HSU Corners

SHEET 1 OF 1
JOB No. OXY_0032_OW01_10756
REV 0 TCS 8/3/2023

All bearings and coordinates refer to New Mexico State Plane coordinate system, East Zone, U.S. Survey Feet.

Distances/areas relative to NAD 83 Combined Scale Factor: 0.99978405 Convergence Angle: 0.31759444°

C-102 Submit Electronically Via OCD Permitting	State of New Mexico Energy, Minerals & Natural Resources Department OIL CONSERVATION DIVISION	Revised July 9, 2024 Submittal Type: ☐ Initial Submittal ☒ Amended Report ☐ As Drilled

WELL LOCATION INFORMATION

API Number	Pool Code	Pool Name
30-015-56510	98123	WC-015 G-08 S233102C, WOLFCAMP

Property Code	Property Name	Well Number
337187	OLIVE WON UNIT	234H

OGRID No.	Operator Name	Ground Level Elevation
16696	OXY USA INC.	3514'

Surface Owner: ☐ State ☐ Fee ☐ Tribal ☑ Federal | Mineral Owner: ☐ State ☐ Fee ☐ Tribal ☑ Federal

Surface Location

UL	Section	Township	Range	Lot	Ft. from N/S	Ft. from E/W	Latitude	Longitude	County
J	26	22S	31E		2237' FSL	2022' FEL	32.36138826	-103.74661103	EDDY

Bottom Hole Location

UL	Section	Township	Range	Lot	Ft. from N/S	Ft. from E/W	Latitude	Longitude	County
B	23	22S	31E		20' FNL	2554' FEL	32.38419282	-103.74834576	EDDY

Dedicated Acres	Infill or Defining Well	Defining Well API	Overlapping Spacing Unit (Y/N)	Consolidation Code
480.00	INFILL	32H - 30-015-56503	NO	N/A

Order Numbers. N/A | Well setbacks are under Common Ownership: ☐Yes ☒No

Kick Off Point (KOP)

UL	Section	Township	Range	Lot	Ft. from N/S	Ft. from E/W	Latitude	Longitude	County
J	26	22S	31E		2339' FSL	2554' FEL	32.36166753	-103.74833342	EDDY

First Take Point (FTP)

UL	Section	Township	Range	Lot	Ft. from N/S	Ft. from E/W	Latitude	Longitude	County
G	26	22S	31E		2539' FNL	2554' FEL	32.36276679	-103.74833605	EDDY

Last Take Point (LTP)

UL	Section	Township	Range	Lot	Ft. from N/S	Ft. from E/W	Latitude	Longitude	County
B	23	22S	31E		100' FNL	2554' FEL	32.38397292	-103.74834554	EDDY

Unitized Area or Area of Uniform Interest	Spacing Unit Type	Ground Floor Elevation:
Y	☑ Horizontal ☐ Vertical	3514'

OPERATOR CERTIFICATIONS

I hereby certify that the information contained herein is true and complete to the best of my knowledge and belief, and, if the well is a vertical or directional well, that this organization either owns a working interest or unleased mineral interest in the land including the proposed bottom hole location or has a right to drill this well at this location pursuant to a contract with an owner of a working interest or unleased mineral interest, or to a voluntary pooling agreement or a compulsory pooling order heretofore entered by the division.

If this well is a horizontal well, I further certify that this organization has received the consent of at least one lessee or owner of a working interest or unleased mineral interest in each tract (in the target pool or formation) in which any part of the well's completed interval will be located or obtained a compulsory pooling order from the division.

Melissa Guidry 04/22/25

Signature Date

Melissa Guidry

Printed Name

melissa_guidry@oxy.com

Email Address

SURVEYOR CERTIFICATIONS

I hereby certify that the well location shown on this plat surveys made by me or under my supervision, and that the my belief.

Signature and Seal of Professional Surveyor

Certificate Number: 21653

Date of Survey: August 3, 2023

18 ***SURVEYOR CERTIFICATION***

I hereby certify that the well location shown on this plat was plotted from field notes of actual surveys made by me or under my supervision, and that the same is true and correct to the best of my belief.

Lloyd P. Short

Date of Survey: AUGUST 3, 2023

Signature and Seal of Professional Surveyor

LLOYD P. SHORT NEW MEXICO 21653 PROFESSIONAL SURVEYOR

Note: No allowable will be assigned to this completion until all interests have been consolidated or a non-standard unit has been approved by the division.

ACREAGE DEDICATION PLATS

This grid represents a standard section. You may superimpose a non-standard section, or larger area, over this grid. Operators must outline the dedicated acreage in a red box, clearly show the well surface location and bottom hole location, if it is directionally drilled, with the dimensions from the section lines in the cardinal directions. If this is a horizontal wellbore show on this plat the location of the First Take Point and Last Take Point, and the point within the Completed interval (other than the First Take Point or Last Take Point) that is closest to any outer boundary of the tract.

Surveyors shall use the latest United States government survey or dependent resurvey. Well locations will be in reference to the New Mexico Principal Meridian. If the land is not surveyed, contact the OCD Engineering Bureau. Independent subdivision surveys will not be acceptable.

16

BHL (NAD83)
X:721917.79' / Y:503994.61'
LAT:32.38419282 / LON:-103.74834576

BHL (NAD27)
X:680735.46' / Y:503934.20'
LAT:32.38407027 / LON:-103.74785651

LTP (NAD83)
X:721918.30' / Y:503914.61'
LAT:32.38397292 / LON:-103.74834554

LTP (NAD27)
X:680735.96' / Y:503854.21'
LAT:32.38385036 / LON:-103.74785629

PPP-1 (NAD83)
X:721948.56' / Y:498738.84'
LAT:32.36974585 / LON:-103.74833918

PPP-1 (NAD27)
X:680766.07' / Y:498678.57'
LAT:32.36962321 / LON:-103.74785051

FTP (NAD83)
X:721963.40' / Y:496199.89'
LAT:32.36276679 / LON:-103.74833605

FTP (NAD27)
X:680780.84' / Y:496139.68'
LAT:32.36264412 / LON:-103.74784766

KOP (NAD83)
X:721966.40' / Y:495799.98'
LAT:32.36166753 / LON:-103.74833342

KOP (NAD27)
X:680783.82' / Y:495739.79'
LAT:32.36154485 / LON:-103.74784508

SHL (NAD83)
X:722498.78' / Y:495701.30'
LAT:32.36138826 / LON:-103.74661103

SHL (NAD27)
X:681316.20' / Y:495641.10'
LAT:32.36126557 / LON:-103.74612274

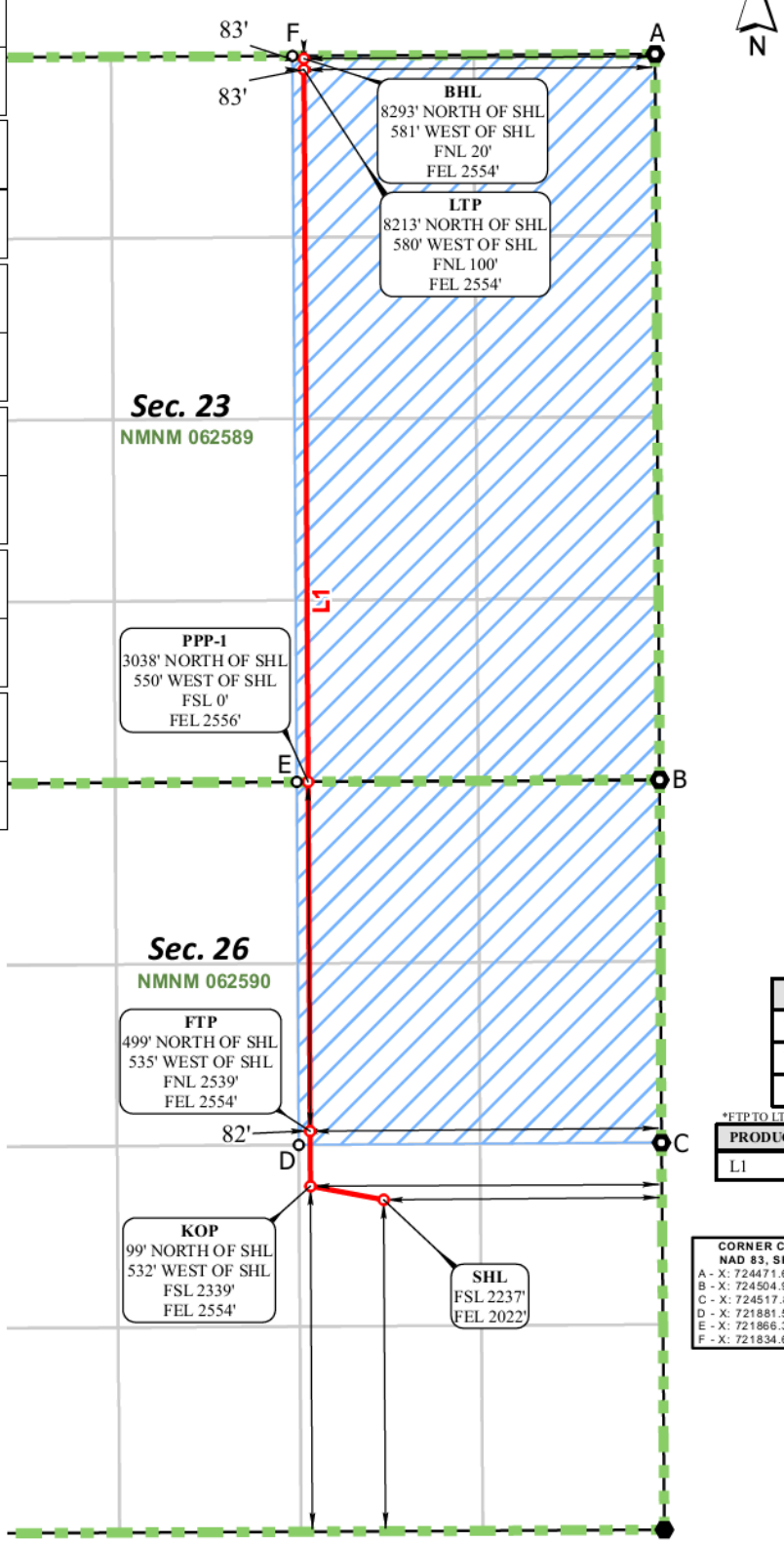

N

17 ***OPERATOR CERTIFICATION***

I hereby certify that the information contained herein is true and complete to the best of my knowledge and belief, and that this organization either owns a working interest or unleased mineral interest in the land including the proposed bottom hole location or has a right to drill this well at this location pursuant to a contract with an owner of such a mineral or working interest, or to a voluntary pooling agreement or a compulsory pooling order heretofore entered by the division.

Roni Mathew 3/26/24
Signature Date

RONI MATHEW
Printed Name

roni_mathew@oxy.com
E-mail Address

18 ***SURVEYOR CERTIFICATION***

I hereby certify that the well location shown on this plat was plotted from field notes of actual surveys made by me or under my supervision, and that the same is true and correct to the best of my belief.

Date of Survey: AUGUST 3, 2023
Signature and Seal of Professional Surveyor

LLOYD P. SHORT
NEW MEXICO
21653
PROFESSIONAL SURVEYOR

FEDERAL LEASE ID	LENGTH
NMNM062590	2539.00'
NMNM062589	5175.86'
TOTAL	7714.86'

*FTP TO LTP LINE BEARINGS

PRODUCTION LINE	BEARING/LENGTH
L1	N00°20'06"W ~ 7714.86'

CORNER COORDINATES NAD 83, SPCS NM EAST	CORNER COORDINATES NAD 27, SPCS NM EAST
A - X: 724471.63' / Y: 504028.35'	A - X: 683289.28' / Y: 503967.93'
B - X: 724504.95' / Y: 498753.54'	B - X: 683322.45' / Y: 498693.27'
C - X: 724517.84' / Y: 496116.14'	C - X: 683335.27' / Y: 496055.94'
D - X: 721881.57' / Y: 496099.59'	D - X: 680699.00' / Y: 496039.39'
E - X: 721866.30' / Y: 498738.37'	E - X: 680683.81' / Y: 498678.10'
F - X: 721834.60' / Y: 504014.16'	F - X: 680652.27' / Y: 503953.75'

Drill Line Events · Section Corners · Drill Line · Dimension Lines · Federal Leases · HSU · HSU Corners

SHEET 1 OF 1
JOB No. OXY_0032_OW01_10756
REV 0 TCS 8/3/2023

All bearings and coordinates refer to New Mexico State Plane coordinate system, East Zone, U.S. Survey Feet.

Distances/areas relative to NAD 83 Combined Scale Factor: 0.99978405 Convergence Angle: 0.31759444°

C-102 Submit Electronically Via OCD Permitting	State of New Mexico Energy, Minerals & Natural Resources Department OIL CONSERVATION DIVISION	Revised July 9, 2024 Submittal Type: ☑ Initial Submittal ☐ Amended Report ☐ As Drilled

WELL LOCATION INFORMATION

API Number	Pool Code	Pool Name	
30-015 -56521	98123	WC-015 G-08 S233102C, WOLFCAMP	
Property Code: 337187	Property Name: EVIL OLIVE 26-23 FEDERAL COM		Well Number: 35H
OGRID No.: 16696	Operator Name: OXY USA INC.		Ground Level Elevation: 3515'
Surface Owner: ☐ State ☐ Fee ☐ Tribal ☑ Federal		Mineral Owner: ☐ State ☐ Fee ☐ Tribal ☑ Federal	

Surface Location

UL	Section	Township	Range	Lot	Ft. from N/S	Ft. from E/W	Latitude	Longitude	County
J	26	22S	31E		2237' FSL	1992' FEL	32.36138778	-103.74651397	EDDY

Bottom Hole Location

UL	Section	Township	Range	Lot	Ft. from N/S	Ft. from E/W	Latitude	Longitude	County
B	23	22S	31E		20' FNL	1830' FEL	32.38419262	-103.74600044	EDDY

Dedicated Acres	Infill or Defining Well	Defining Well API	Overlapping Spacing Unit (Y/N)	Consolidation Code
480.00	INFILL	PENDING-EVIL OLIVE 26-23 FED COM 36H	NO	
Order Numbers.			Well setbacks are under Common Ownership: ☐Yes ☐No	

Kick Off Point (KOP)

UL	Section	Township	Range	Lot	Ft. from N/S	Ft. from E/W	Latitude	Longitude	County
J	26	22S	31E		2339' FSL	1830' FEL	32.36166741	-103.74598868	EDDY

First Take Point (FTP)

UL	Section	Township	Range	Lot	Ft. from N/S	Ft. from E/W	Latitude	Longitude	County
G	26	22S	31E		2539' FNL	1830' FEL	32.36276734	-103.74599128	EDDY

Last Take Point (LTP)

UL	Section	Township	Range	Lot	Ft. from N/S	Ft. from E/W	Latitude	Longitude	County
B	23	22S	31E		100' FNL	1830' FEL	32.38397272	-103.74600022	EDDY

Unitized Area or Area of Uniform Interest	Spacing Unit Type ☑ Horizontal ☐ Vertical	Ground Floor Elevation: 3515'

OPERATOR CERTIFICATIONS

I hereby certify that the information contained herein is true and complete to the best of my knowledge and belief, and, if the well is a vertical or directional well, that this organization either owns a working interest or unleased mineral interest in the land including the proposed bottom hole location or has a right to drill this well at this location pursuant to a contract with an owner of a working interest or unleased mineral interest, or to a voluntary pooling agreement or a compulsory pooling order heretofore entered by the division.

If this well is a horizontal well, I further certify that this organization has received the consent of at least one lessee or owner of a working interest or unleased mineral interest in each tract (in the target pool or formation) in which any part of the well's completed interval will be located or obtained a compulsory pooling order from the division.

Sara Guthrie 3/4/2025

Signature Date

Sara Guthrie

Printed Name

sara_guthrie@oxy.com

Email Address

SURVEYOR CERTIFICATIONS

I hereby certify that the well location shown on this plat surveys made by me or under my supervision, and that the my belief.

18 **SURVEYOR CERTIFICATION**
I hereby certify that the well location shown on this plat was plotted from field notes of actual surveys made by me or under my supervision, and that the same is true and correct to the best of my belief.

Date of Survey: AUGUST 3, 2023
Signature and Seal of Professional Surveyor

LLOYD P. SHORT NEW MEXICO 21653 PROFESSIONAL SURVEYOR

Signature and Seal of Professional Surveyor

Certificate Number	Date of Survey
21653	August 3, 2023

Note: No allowable will be assigned to this completion until all interests have been consolidated or a non-standard unit has been approved by the division.

ACREAGE DEDICATION PLATS

This grid represents a standard section. You may superimpose a non-standard section, or larger area, over this grid. Operators must outline the dedicated acreage in a red box, clearly show the well surface location and bottom hole location, if it is directionally drilled, with the dimensions from the section lines in the cardinal directions. If this is a horizontal wellbore show on this plat the location of the First Take Point and Last Take Point, and the point within the Completed interval (other than the First Take Point or Last Take Point) that is closest to any outer boundary of the tract.

Surveyors shall use the latest United States government survey or dependent resurvey. Well locations will be in reference to the New Mexico Principal Meridian. If the land is not surveyed, contact the OCD Engineering Bureau. Independent subdivision surveys will not be acceptable.

16

BHL (NAD83)
X:722641.78' / Y:503998.51'
LAT:32.38419262 / LON:-103.74600044

BHL (NAD27)
X:681459.45' / Y:503938.09'
LAT:32.38407005 / LON:-103.74551125

LTP (NAD83)
X:722642.29' / Y:503918.51'
LAT:32.38397272 / LON:-103.74600022

LTP (NAD27)
X:681459.95' / Y:503858.10'
LAT:32.38385015 / LON:-103.74551105

PPP-1 (NAD83)
X:722672.55' / Y:498743.01'
LAT:32.36974639 / LON:-103.74599423

PPP-1 (NAD27)
X:681490.06' / Y:498682.73'
LAT:32.36962374 / LON:-103.74550563

FTP (NAD83)
X:722687.39' / Y:496204.05'
LAT:32.36276734 / LON:-103.74599128

FTP (NAD27)
X:681504.83' / Y:496143.84'
LAT:32.36264465 / LON:-103.74550296

KOP (NAD83)
X:722690.39' / Y:495803.90'
LAT:32.36166741 / LON:-103.74598868

KOP (NAD27)
X:681507.81' / Y:495743.71'
LAT:32.36154472 / LON:-103.74550040

SHL (NAD83)
X:722528.76' / Y:495701.28'
LAT:32.36138778 / LON:-103.74651397

SHL (NAD27)
X:681346.17' / Y:495641.09'
LAT:32.36126509 / LON:-103.74602568

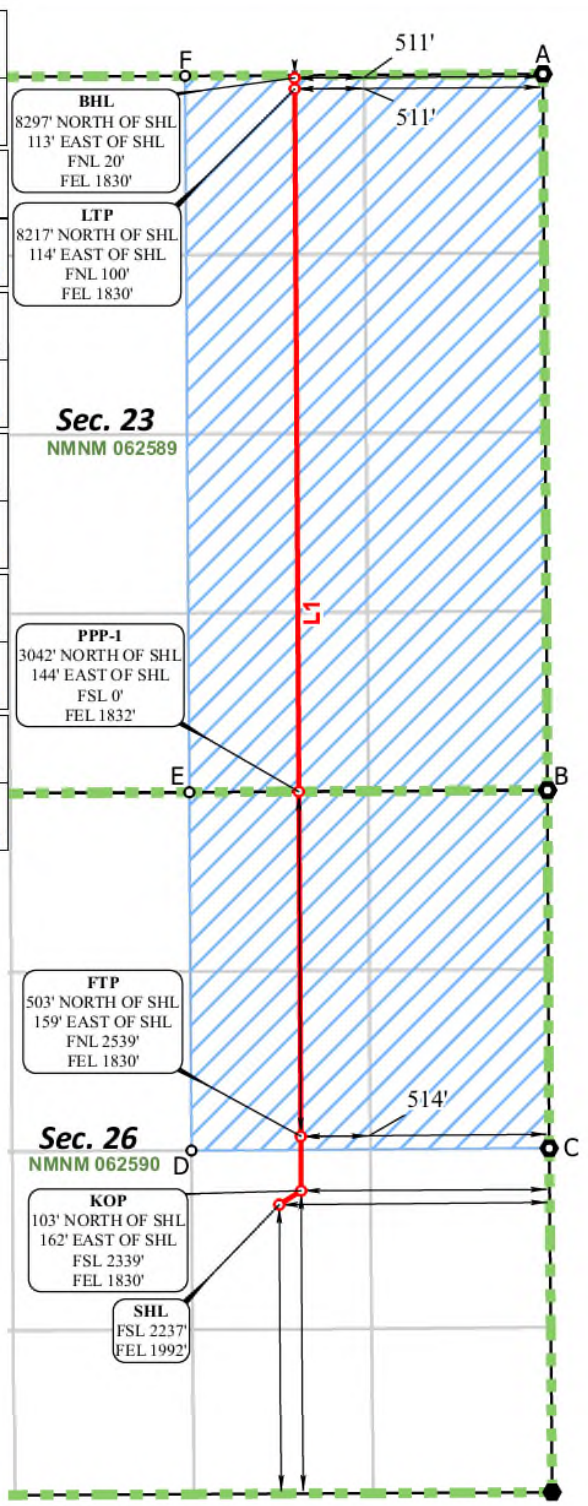

N

17 ***OPERATOR CERTIFICATION***
I hereby certify that the information contained herein is true and complete to the best of my knowledge and belief, and that this organization either owns a working interest or unleased mineral interest in the land including the proposed bottom hole location or has a right to drill this well at this location pursuant to a contract with an owner of such a mineral or working interest, or to a voluntary pooling agreement or a compulsory pooling order heretofore entered by the division.

Roni Mathew 3/26/24
Signature Date

RONI MATHEW
Printed Name

roni_mathew@oxy.com
E-mail Address

18 ***SURVEYOR CERTIFICATION***
I hereby certify that the well location shown on this plat was plotted from field notes of actual surveys made by me or under my supervision, and that the same is true and correct to the best of my belief.

Lloyd P. Short

Date of Survey: AUGUST 3, 2023
Signature and Seal of Professional Surveyor

LLOYD P. SHORT
NEW MEXICO
21653
PROFESSIONAL SURVEYOR

FEDERAL LEASE ID	LENGTH
NMNM062590	2539.00'
NMNM062589	5175.59'
TOTAL	7714.59'

*FTP TO LTP LINE BEARINGS

PRODUCTION LINE	BEARING/LENGTH
L1	N00°20'06"W ~ 7714.59'

CORNER COORDINATES NAD 83, SPCS NM EAST	CORNER COORDINATES NAD 27, SPCS NM EAST
A - X: 724471.63' / Y: 504028.35'	A - X: 683289.28' / Y: 503967.93'
B - X: 724504.95' / Y: 498753.54'	B - X: 683322.45' / Y: 498693.27'
C - X: 724517.84' / Y: 496116.14'	C - X: 683335.27' / Y: 496055.94'
D - X: 721881.57' / Y: 496099.59'	D - X: 680699.00' / Y: 496039.39'
E - X: 721866.30' / Y: 498738.37'	E - X: 680683.81' / Y: 498678.10'
F - X: 721834.60' / Y: 504014.16'	F - X: 680652.27' / Y: 503953.75'

Drill Line Events · Section Corners · Drill Line · Dimension Lines · Federal Leases · HSU · HSU Corners

SHEET 1 OF 1
JOB No. OXY_0032_OW01_10757
REV 0 TCS 8/3/2023

All bearings and coordinates refer to New Mexico State Plane coordinate system, East Zone, U.S. Survey Feet.

Distances/areas relative to NAD 83 Combined Scale Factor: 0.99978405 Convergence Angle: 0.31759444°

C-102 Submit Electronically Via OCD Permitting	State of New Mexico Energy, Minerals & Natural Resources Department OIL CONSERVATION DIVISION	Revised July 9, 2024 Submittal Type: ☐ Initial Submittal ☒ Amended Report ☐ As Drilled

WELL LOCATION INFORMATION

API Number	Pool Code	Pool Name
30-015-56521	98123	WC-015 G-08 S233102C, WOLFCAMP

Property Code	Property Name	Well Number
	OLIVE WON UNIT	235H

OGRID No.	Operator Name	Ground Level Elevation
16696	OXY USA INC.	3515'

Surface Owner: ☐ State ☐ Fee ☐ Tribal ☒ Federal | Mineral Owner: ☐ State ☐ Fee ☐ Tribal ☒ Federal

Surface Location

UL	Section	Township	Range	Lot	Ft. from N/S	Ft. from E/W	Latitude	Longitude	County
J	26	22S	31E		2237' FSL	1992' FEL	32.36138778	-103.74651397	EDDY

Bottom Hole Location

UL	Section	Township	Range	Lot	Ft. from N/S	Ft. from E/W	Latitude	Longitude	County
B	23	22S	31E		20' FNL	1830' FEL	32.38419262	-103.74600044	EDDY

Dedicated Acres	Infill or Defining Well	Defining Well API	Overlapping Spacing Unit (Y/N)	Consolidation Code
480.00	INFILL	PENDING-EVIL OLIVE 26-23 FED COM 36H	NO	N/A

Order Numbers. N/A | Well setbacks are under Common Ownership: ☐Yes ☒No

Kick Off Point (KOP)

UL	Section	Township	Range	Lot	Ft. from N/S	Ft. from E/W	Latitude	Longitude	County
J	26	22S	31E		2339' FSL	1830' FEL	32.36166741	-103.74598868	EDDY

First Take Point (FTP)

UL	Section	Township	Range	Lot	Ft. from N/S	Ft. from E/W	Latitude	Longitude	County
G	26	22S	31E		2539' FNL	1830' FEL	32.36276734	-103.74599128	EDDY

Last Take Point (LTP)

UL	Section	Township	Range	Lot	Ft. from N/S	Ft. from E/W	Latitude	Longitude	County
B	23	22S	31E		100' FNL	1830' FEL	32.38397272	-103.74600022	EDDY

Unitized Area or Area of Uniform Interest	Spacing Unit Type	Ground Floor Elevation:
Y	☒ Horizontal ☐ Vertical	3515'

OPERATOR CERTIFICATIONS

I hereby certify that the information contained herein is true and complete to the best of my knowledge and belief, and, if the well is a vertical or directional well, that this organization either owns a working interest or unleased mineral interest in the land including the proposed bottom hole location or has a right to drill this well at this location pursuant to a contract with an owner of a working interest or unleased mineral interest, or to a voluntary pooling agreement or a compulsory pooling order heretofore entered by the division.

If this well is a horizontal well, I further certify that this organization has received the consent of at least one lessee or owner of a working interest or unleased mineral interest in each tract (in the target pool or formation) in which any part of the well's completed interval will be located or obtained a compulsory pooling order from the division.

Melissa Guidry 04/23/25

Signature | Date

Melissa Guidry

Printed Name

melissa_guidry@oxy.com

Email Address

SURVEYOR CERTIFICATIONS

I hereby certify that the well location shown on this plat surveys made by me or under my supervision, and that the my belief.

18 SURVEYOR CERTIFICATION
I hereby certify that the well location shown on this plat was plotted from field notes of actual surveys made by me or under my supervision, and that the same is true and correct to the best of my belief.

Date of Survey: AUGUST 3, 2023
Signature and Seal of Professional Surveyor

LLOYD P. SHORT NEW MEXICO 21653 PROFESSIONAL SURVEYOR

Signature and Seal of Professional Surveyor

Certificate Number	Date of Survey
21653	August 3, 2023

Note: No allowable will be assigned to this completion until all interests have been consolidated or a non-standard unit has been approved by the division.

ACREAGE DEDICATION PLATS

This grid represents a standard section. You may superimpose a non-standard section, or larger area, over this grid. Operators must outline the dedicated acreage in a red box, clearly show the well surface location and bottom hole location, if it is directionally drilled, with the dimensions from the section lines in the cardinal directions. If this is a horizontal wellbore show on this plat the location of the First Take Point and Last Take Point, and the point within the Completed interval (other than the First Take Point or Last Take Point) that is closest to any outer boundary of the tract.

Surveyors shall use the latest United States government survey or dependent resurvey. Well locations will be in reference to the New Mexico Principal Meridian. If the land is not surveyed, contact the OCD Engineering Bureau. Independent subdivision surveys will not be acceptable.

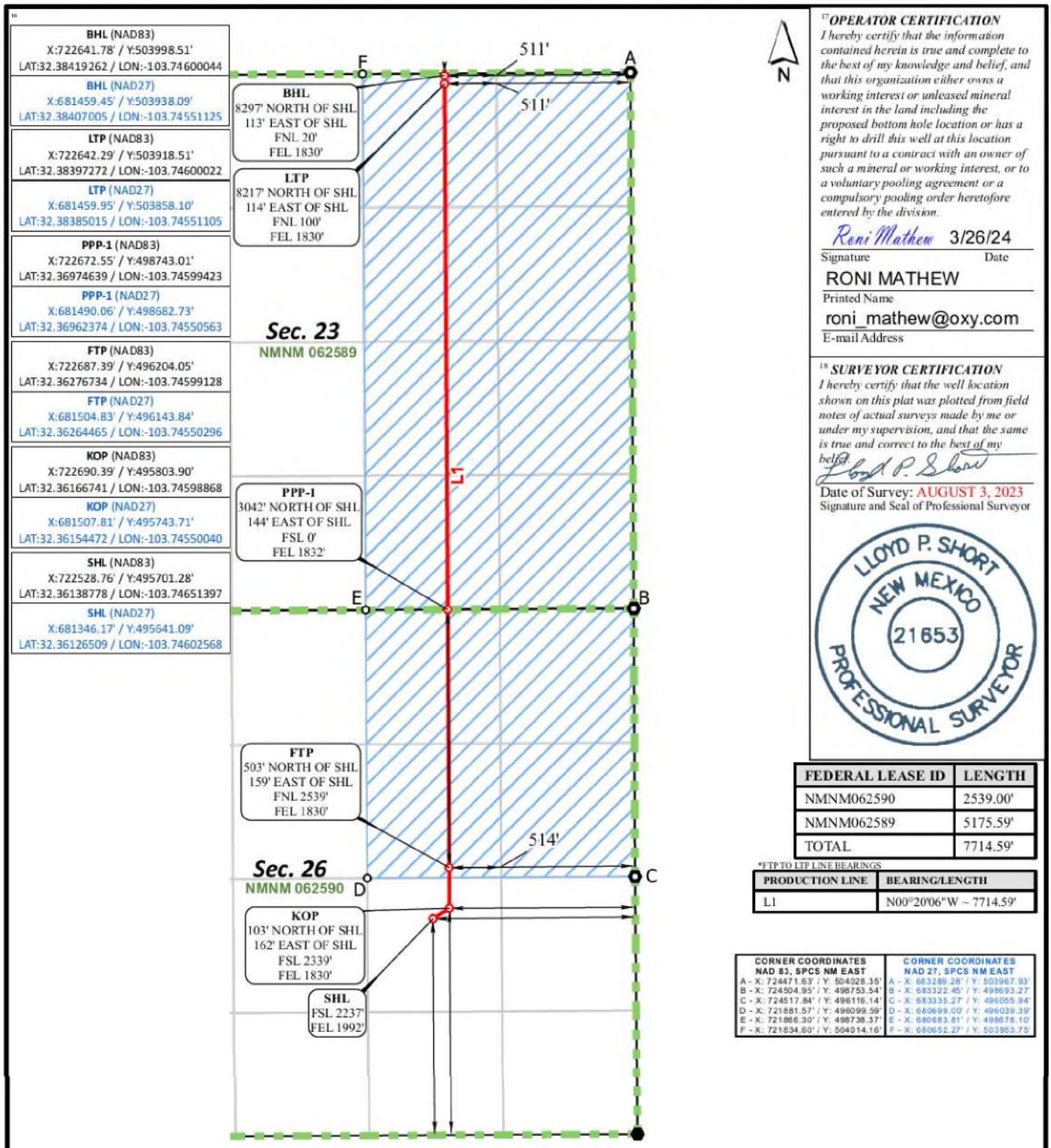

17 OPERATOR CERTIFICATION

I hereby certify that the information contained herein is true and complete to the best of my knowledge and belief, and that this organization either owns a working interest or unleased mineral interest in the land including the proposed bottom hole location or has a right to drill this well at this location pursuant to a contract with an owner of such a mineral or working interest, or to a voluntary pooling agreement or a compulsory pooling order heretofore entered by the division.

Roni Mathew 3/26/24

Signature Date

RONI MATHEW

Printed Name

roni_mathew@oxy.com

E-mail Address

18 SURVEYOR CERTIFICATION

I hereby certify that the well location shown on this plat was plotted from field notes of actual surveys made by me or under my supervision, and that the same is true and correct to the best of my belief.

Date of Survey: AUGUST 3, 2023

Signature and Seal of Professional Surveyor

LLOYD P. SHORT NEW MEXICO 21653 PROFESSIONAL SURVEYOR

FEDERAL LEASE ID	LENGTH
NMNM062590	2539.00'
NMNM062589	5175.59'
TOTAL	7714.59'

*FTP TO LTP LINE BEARINGS

PRODUCTION LINE	BEARING/LENGTH
L1	N00°20'06"W ~ 7714.59'

CORNER COORDINATES NAD 83, SPCS NM EAST	CORNER COORDINATES NAD 27, SPCS NM EAST
A - X: 724471.63' / Y: 504028.35'	A - X: 683289.28' / Y: 503967.93'
B - X: 724504.95' / Y: 498753.54'	B - X: 683322.45' / Y: 498693.27'
C - X: 724517.84' / Y: 496116.14'	C - X: 683335.27' / Y: 496055.94'
D - X: 721881.57' / Y: 496099.59'	D - X: 680699.00' / Y: 496039.39'
E - X: 721866.30' / Y: 498738.37'	E - X: 680683.81' / Y: 498678.10'
F - X: 721834.60' / Y: 504014.16'	F - X: 680652.27' / Y: 503953.75'

Drill Line Events · Section Corners · Drill Line · Dimension Lines · Federal Leases · HSU · HSU Corners

SHEET 1 OF 1
JOB No. OXY_0032_OW01_10757
REV 0 TCS 8/3/2023

All bearings and coordinates refer to New Mexico State Plane coordinate system, East Zone, U.S. Survey Feet.

Distances/areas relative to NAD 83 Combined Scale Factor: 0.99978405 Convergence Angle: 0.31759444°

C-102 Submit Electronically Via OCD Permitting	State of New Mexico Energy, Minerals & Natural Resources Department OIL CONSERVATION DIVISION	Revised July 9, 2024 Submittal Type: ☑ Initial Submittal ☐ Amended Report ☐ As Drilled

WELL LOCATION INFORMATION

API Number	Pool Code	Pool Name
30-015 -56522	98123	WC-015 G-08 S233102C, WOLFCAMP

Property Code	Property Name	Well Number
337187	EVIL OLIVE 26-23 FEDERAL COM	36H

OGRID No.	Operator Name	Ground Level Elevation
16696	OXY USA INC.	3516'

Surface Owner: ☐ State ☐ Fee ☐ Tribal ☑ Federal | Mineral Owner: ☐ State ☐ Fee ☐ Tribal ☑ Federal

Surface Location

UL	Section	Township	Range	Lot	Ft. from N/S	Ft. from E/W	Latitude	Longitude	County
I	26	22S	31E		2235' FSL	1049' FEL	32.36138068	-103.74345840	EDDY

Bottom Hole Location

UL	Section	Township	Range	Lot	Ft. from N/S	Ft. from E/W	Latitude	Longitude	County
A	23	22S	31E		20' FNL	1075' FEL	32.38419237	-103.74355470	EDDY

Dedicated Acres	Infill or Defining Well	Defining Well API	Overlapping Spacing Unit (Y/N)	Consolidation Code
480.00	DEFINING		NO	

Order Numbers. | Well setbacks are under Common Ownership: ☐Yes ☐No

Kick Off Point (KOP)

UL	Section	Township	Range	Lot	Ft. from N/S	Ft. from E/W	Latitude	Longitude	County
I	26	22S	31E		2340' FSL	1075' FEL	32.36166999	-103.74354354	EDDY

First Take Point (FTP)

UL	Section	Township	Range	Lot	Ft. from N/S	Ft. from E/W	Latitude	Longitude	County
H	26	22S	31E		2538' FNL	1075' FEL	32.36277060	-103.74354612	EDDY

Last Take Point (LTP)

UL	Section	Township	Range	Lot	Ft. from N/S	Ft. from E/W	Latitude	Longitude	County
A	23	22S	31E		100' FNL	1075' FEL	32.38397247	-103.74355449	EDDY

Unitized Area or Area of Uniform Interest	Spacing Unit Type ☑ Horizontal ☐ Vertical	Ground Floor Elevation: 3516'

OPERATOR CERTIFICATIONS

I hereby certify that the information contained herein is true and complete to the best of my knowledge and belief, and, if the well is a vertical or directional well, that this organization either owns a working interest or unleased mineral interest in the land including the proposed bottom hole location or has a right to drill this well at this location pursuant to a contract with an owner of a working interest or unleased mineral interest, or to a voluntary pooling agreement or a compulsory pooling order heretofore entered by the division.

If this well is a horizontal well, I further certify that this organization has received the consent of at least one lessee or owner of a working interest or unleased mineral interest in each tract (in the target pool or formation) in which any part of the well's completed interval will be located or obtained a compulsory pooling order from the division.

Sara Guthrie 3/4/2025

Signature Date

Sara Guthrie

Printed Name

sara_guthrie@oxy.com

Email Address

SURVEYOR CERTIFICATIONS

I hereby certify that the well location shown on this plat surveys made by me or under my supervision, and that th my belief.

18 **SURVEYOR CERTIFICATION**
I hereby certify that the well location shown on this plat was plotted from field notes of actual surveys made by me or under my supervision, and that the same is true and correct to the best of my belief.

Lloyd P. Short

Date of Survey: AUGUST 2, 2023
Signature and Seal of Professional Surveyor

LLOYD P. SHORT NEW MEXICO 21653 PROFESSIONAL SURVEYOR

Signature and Seal of Professional Surveyor

Certificate Number	Date of Survey
21653	August 3, 2023

Note: No allowable will be assigned to this completion until all interests have been consolidated or a non-standard unit has been approved by the division.

ACREAGE DEDICATION PLATS

This grid represents a standard section. You may superimpose a non-standard section, or larger area, over this grid. Operators must outline the dedicated acreage in a red box, clearly show the well surface location and bottom hole location, if it is directionally drilled, with the dimensions from the section lines in the cardinal directions. If this is a horizontal wellbore show on this plat the location of the First Take Point and Last Take Point, and the point within the Completed interval (other than the First Take Point or Last Take Point) that is closest to any outer boundary of the tract.

Surveyors shall use the latest United States government survey or dependent resurvey. Well locations will be in reference to the New Mexico Principal Meridian. If the land is not surveyed, contact the OCD Engineering Bureau. Independent subdivision surveys will not be acceptable.

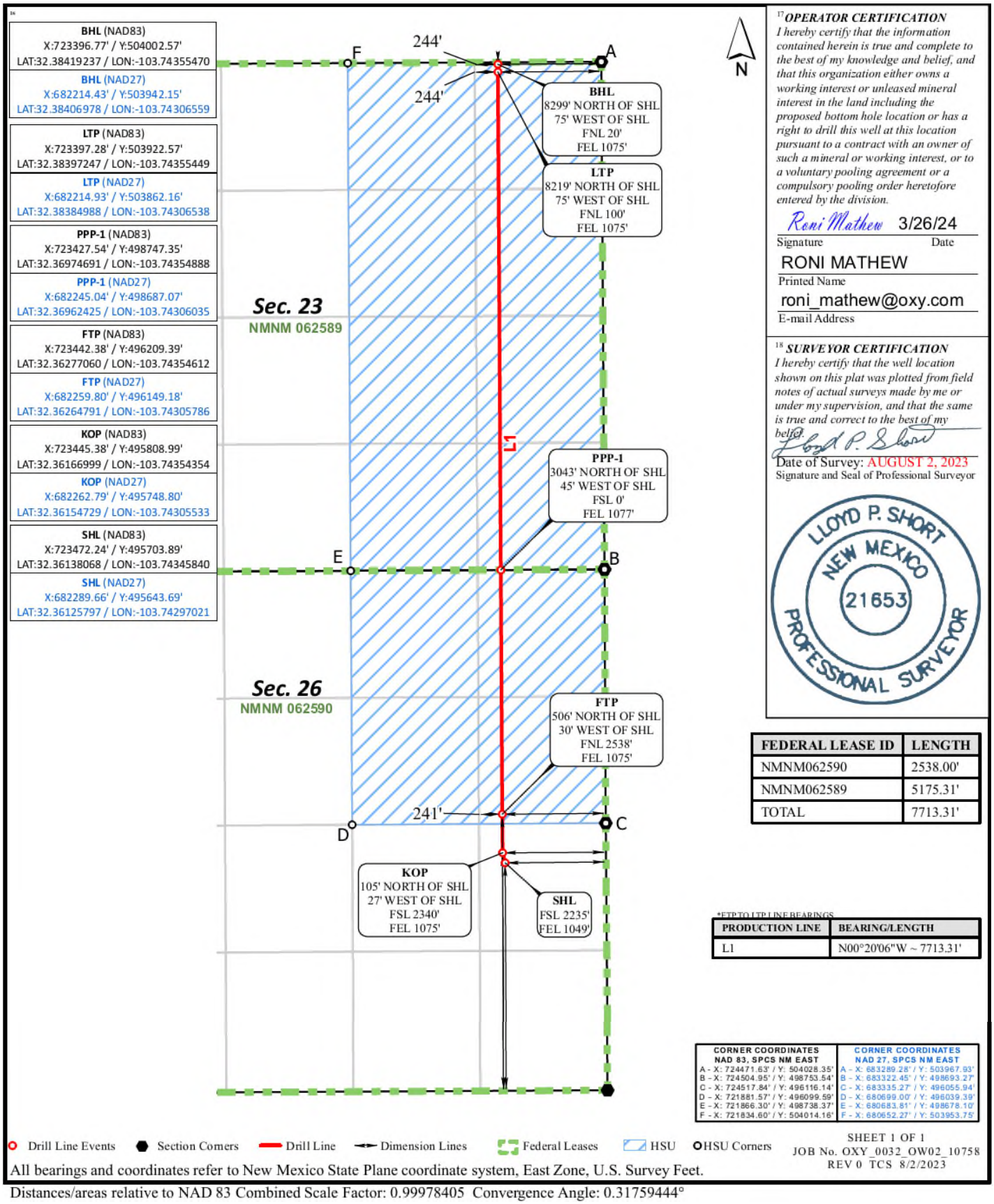

[17] **OPERATOR CERTIFICATION**

I hereby certify that the information contained herein is true and complete to the best of my knowledge and belief, and that this organization either owns a working interest or unleased mineral interest in the land including the proposed bottom hole location or has a right to drill this well at this location pursuant to a contract with an owner of such a mineral or working interest, or to a voluntary pooling agreement or a compulsory pooling order heretofore entered by the division.

Roni Mathew 3/26/24

Signature Date

RONI MATHEW

Printed Name

roni_mathew@oxy.com

E-mail Address

[18] **SURVEYOR CERTIFICATION**

I hereby certify that the well location shown on this plat was plotted from field notes of actual surveys made by me or under my supervision, and that the same is true and correct to the best of my belief.

Lloyd P. Short

Date of Survey: AUGUST 2, 2023

Signature and Seal of Professional Surveyor

LLOYD P. SHORT
NEW MEXICO
21653
PROFESSIONAL SURVEYOR

FEDERAL LEASE ID	LENGTH
NMNM062590	2538.00'
NMNM062589	5175.31'
TOTAL	7713.31'

*FTP TO LTP LINE BEARINGS

PRODUCTION LINE	BEARING/LENGTH
L1	N00°20'06"W ~ 7713.31'

CORNER COORDINATES NAD 83, SPCS NM EAST	CORNER COORDINATES NAD 27, SPCS NM EAST
A - X: 724471.63' / Y: 504028.35'	A - X: 683289.28' / Y: 503967.93'
B - X: 724504.95' / Y: 498753.54'	B - X: 683322.45' / Y: 498693.27'
C - X: 724517.84' / Y: 496116.14'	C - X: 683335.27' / Y: 496055.94'
D - X: 721881.57' / Y: 496099.59'	D - X: 680699.00' / Y: 496039.39'
E - X: 721866.30' / Y: 498738.37'	E - X: 680683.81' / Y: 498678.10'
F - X: 721834.60' / Y: 504014.16'	F - X: 680652.27' / Y: 503953.75'

SHEET 1 OF 1
JOB No. OXY_0032_OW02_10758
REV 0 TCS 8/2/2023

All bearings and coordinates refer to New Mexico State Plane coordinate system, East Zone, U.S. Survey Feet.

Distances/areas relative to NAD 83 Combined Scale Factor: 0.99978405 Convergence Angle: 0.31759444°

C-102 Submit Electronically Via OCD Permitting	State of New Mexico Energy, Minerals & Natural Resources Department OIL CONSERVATION DIVISION	Revised July 9, 2024 Submittal Type: ☐ Initial Submittal ☒ Amended Report ☐ As Drilled

WELL LOCATION INFORMATION

API Number	Pool Code	Pool Name
30-015-56522	98123	WC-015 G-08 S233102C, WOLFCAMP

Property Code	Property Name	Well Number
337187	OLIVE WON UNIT	236H

OGRID No.	Operator Name	Ground Level Elevation
16696	OXY USA INC.	3516'

Surface Owner: ☐ State ☐ Fee ☐ Tribal ☒ Federal | Mineral Owner: ☐ State ☐ Fee ☐ Tribal ☒ Federal

Surface Location

UL	Section	Township	Range	Lot	Ft. from N/S	Ft. from E/W	Latitude	Longitude	County
I	26	22S	31E		2235' FSL	1049' FEL	32.36138068	-103.74345840	EDDY

Bottom Hole Location

UL	Section	Township	Range	Lot	Ft. from N/S	Ft. from E/W	Latitude	Longitude	County
A	23	22S	31E		20' FNL	1075' FEL	32.38419237	-103.74355470	EDDY

Dedicated Acres	Infill or Defining Well	Defining Well API	Overlapping Spacing Unit (Y/N)	Consolidation Code
480.00	DEFINING	236H - 30-015-56522	NO	N/A

Order Numbers. N/A | Well setbacks are under Common Ownership: ☐Yes ☒No

Kick Off Point (KOP)

UL	Section	Township	Range	Lot	Ft. from N/S	Ft. from E/W	Latitude	Longitude	County
I	26	22S	31E		2340' FSL	1075' FEL	32.36166999	-103.74354354	EDDY

First Take Point (FTP)

UL	Section	Township	Range	Lot	Ft. from N/S	Ft. from E/W	Latitude	Longitude	County
H	26	22S	31E		2538' FNL	1075' FEL	32.36277060	-103.74354612	EDDY

Last Take Point (LTP)

UL	Section	Township	Range	Lot	Ft. from N/S	Ft. from E/W	Latitude	Longitude	County
A	23	22S	31E		100' FNL	1075' FEL	32.38397247	-103.74355449	EDDY

Unitized Area or Area of Uniform Interest	Spacing Unit Type	Ground Floor Elevation:
Y	☒ Horizontal ☐ Vertical	3516'

OPERATOR CERTIFICATIONS

I hereby certify that the information contained herein is true and complete to the best of my knowledge and belief, and, if the well is a vertical or directional well, that this organization either owns a working interest or unleased mineral interest in the land including the proposed bottom hole location or has a right to drill this well at this location pursuant to a contract with an owner of a working interest or unleased mineral interest, or to a voluntary pooling agreement or a compulsory pooling order heretofore entered by the division.

If this well is a horizontal well, I further certify that this organization has received the consent of at least one lessee or owner of a working interest or unleased mineral interest in each tract (in the target pool or formation) in which any part of the well's completed interval will be located or obtained a compulsory pooling order from the division.

Melissa Guidry 04/24/25

Signature Date

Melissa Guidry

Printed Name

melissa_guidry@oxy.com

Email Address

SURVEYOR CERTIFICATIONS

I hereby certify that the well location shown on this plat surveys made by me or under my supervision, and that th my belief.

Signature and Seal of Professional Surveyor

Certificate Number: 21653

Date of Survey: August 3, 2023

18 *SURVEYOR CERTIFICATION*
I hereby certify that the well location shown on this plat was plotted from field notes of actual surveys made by me or under my supervision, and that the same is true and correct to the best of my belief.

Lloyd P. Short

Date of Survey: AUGUST 2, 2023
Signature and Seal of Professional Surveyor

LLOYD P. SHORT NEW MEXICO 21653 PROFESSIONAL SURVEYOR

Note: No allowable will be assigned to this completion until all interests have been consolidated or a non-standard unit has been approved by the division.

ACREAGE DEDICATION PLATS

This grid represents a standard section. You may superimpose a non-standard section, or larger area, over this grid. Operators must outline the dedicated acreage in a red box, clearly show the well surface location and bottom hole location, if it is directionally drilled, with the dimensions from the section lines in the cardinal directions. If this is a horizontal wellbore show on this plat the location of the First Take Point and Last Take Point, and the point within the Completed interval (other than the First Take Point or Last Take Point) that is closest to any outer boundary of the tract.

Surveyors shall use the latest United States government survey or dependent resurvey. Well locations will be in reference to the New Mexico Principal Meridian. If the land is not surveyed, contact the OCD Engineering Bureau. Independent subdivision surveys will not be acceptable.

16

BHL (NAD83)
X:723396.77' / Y:504002.57'
LAT:32.38419237 / LON:-103.74355470

BHL (NAD27)
X:682214.43' / Y:503942.15'
LAT:32.38406978 / LON:-103.74306559

LTP (NAD83)
X:723397.28' / Y:503922.57'
LAT:32.38397247 / LON:-103.74355449

LTP (NAD27)
X:682214.93' / Y:503862.16'
LAT:32.38384988 / LON:-103.74306538

PPP-1 (NAD83)
X:723427.54' / Y:498747.35'
LAT:32.36974691 / LON:-103.74354888

PPP-1 (NAD27)
X:682245.04' / Y:498687.07'
LAT:32.36962425 / LON:-103.74306035

FTP (NAD83)
X:723442.38' / Y:496209.39'
LAT:32.36277060 / LON:-103.74354612

FTP (NAD27)
X:682259.80' / Y:496149.18'
LAT:32.36264791 / LON:-103.74305786

KOP (NAD83)
X:723445.38' / Y:495808.99'
LAT:32.36166999 / LON:-103.74354354

KOP (NAD27)
X:682262.79' / Y:495748.80'
LAT:32.36154729 / LON:-103.74305533

SHL (NAD83)
X:723472.24' / Y:495703.89'
LAT:32.36138068 / LON:-103.74345840

SHL (NAD27)
X:682289.66' / Y:495643.69'
LAT:32.36125797 / LON:-103.74297021

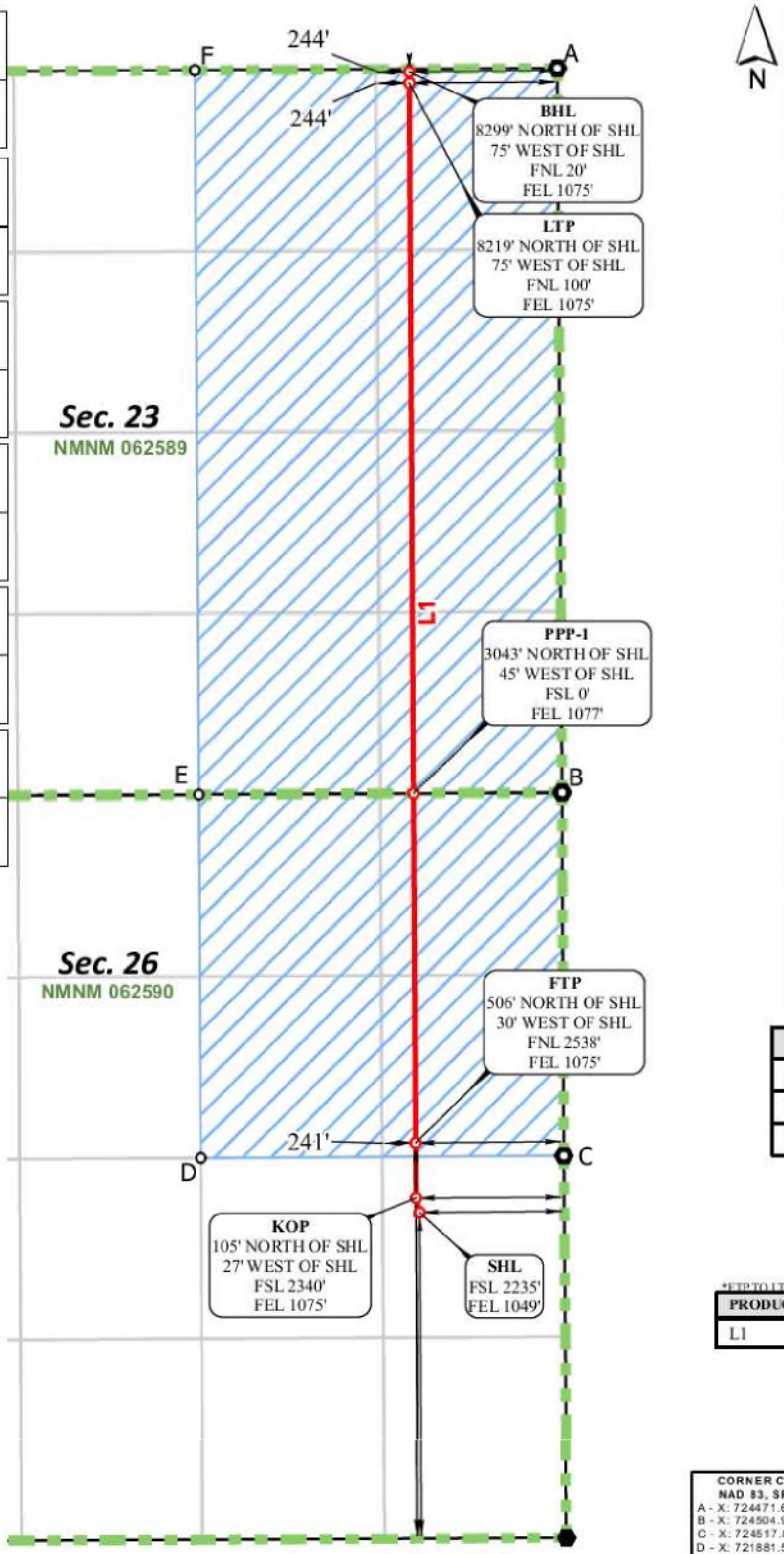

N

17 ***OPERATOR CERTIFICATION***

I hereby certify that the information contained herein is true and complete to the best of my knowledge and belief, and that this organization either owns a working interest or unleased mineral interest in the land including the proposed bottom hole location or has a right to drill this well at this location pursuant to a contract with an owner of such a mineral or working interest, or to a voluntary pooling agreement or a compulsory pooling order heretofore entered by the division.

Roni Mathew 3/26/24
Signature Date

RONI MATHEW
Printed Name

roni_mathew@oxy.com
E-mail Address

18 ***SURVEYOR CERTIFICATION***

I hereby certify that the well location shown on this plat was plotted from field notes of actual surveys made by me or under my supervision, and that the same is true and correct to the best of my belief.

Lloyd P. Short

Date of Survey: AUGUST 2, 2023
Signature and Seal of Professional Surveyor

LLOYD P. SHORT
NEW MEXICO
21653
PROFESSIONAL SURVEYOR

FEDERAL LEASE ID	LENGTH
NMNM062590	2538.00'
NMNM062589	5175.31'
TOTAL	7713.31'

*FTP TO LTP LINE BEARINGS

PRODUCTION LINE	BEARING/LENGTH
L1	N00°20'06"W ~ 7713.31'

CORNER COORDINATES NAD 83, SPCS NM EAST	CORNER COORDINATES NAD 27, SPCS NM EAST
A - X: 724471.63' / Y: 504028.35'	A - X: 683289.28' / Y: 503967.93'
B - X: 724504.95' / Y: 498753.54'	B - X: 683322.45' / Y: 498693.27'
C - X: 724517.84' / Y: 496116.14'	C - X: 683335.27' / Y: 496055.94'
D - X: 721881.57' / Y: 496099.59'	D - X: 680699.00' / Y: 496039.39'
E - X: 721866.30' / Y: 498738.37'	E - X: 680683.81' / Y: 498678.10'
F - X: 721834.60' / Y: 504014.16'	F - X: 680652.27' / Y: 503953.75'

Drill Line Events · Section Corners · Drill Line · Dimension Lines · Federal Leases · HSU · HSU Corners

SHEET 1 OF 1
JOB No. OXY_0032_OW02_10758
REV 0 TCS 8/2/2023

All bearings and coordinates refer to New Mexico State Plane coordinate system, East Zone, U.S. Survey Feet.

Distances/areas relative to NAD 83 Combined Scale Factor: 0.99978405 Convergence Angle: 0.31759444°

C-102 Submit Electronically Via OCD Permitting	State of New Mexico Energy, Minerals & Natural Resources Department OIL CONSERVATION DIVISION	Revised July 9, 2024 Submittal Type: ☑ Initial Submittal ☐ Amended Report ☐ As Drilled

WELL LOCATION INFORMATION

API Number	Pool Code	Pool Name	
30-015 -56524	98123	WC-015 G-08 S233102C, WOLFCAMP	
Property Code: 337187	Property Name: EVIL OLIVE 26-23 FEDERAL COM		Well Number: 37H
OGRID No.: 16696	Operator Name: OXY USA INC.		Ground Level Elevation: 3517'
Surface Owner: ☐ State ☐ Fee ☐ Tribal ☑ Federal		Mineral Owner: ☐ State ☐ Fee ☐ Tribal ☑ Federal	

Surface Location

UL	Section	Township	Range	Lot	Ft. from N/S	Ft. from E/W	Latitude	Longitude	County
I	26	22S	31E		2235' FSL	1019' FEL	32.36138013	-103.74336141	EDDY

Bottom Hole Location

UL	Section	Township	Range	Lot	Ft. from N/S	Ft. from E/W	Latitude	Longitude	County
A	23	22S	31E		20' FNL	330' FEL	32.38419207	-103.74114135	EDDY

Dedicated Acres	Infill or Defining Well	Defining Well API	Overlapping Spacing Unit (Y/N)	Consolidation Code
480.00	INFILL	PENDING-EVIL OLIVE 26-23 FED COM 36H	NO	
Order Numbers.			Well setbacks are under Common Ownership: ☐Yes ☐No	

Kick Off Point (KOP)

UL	Section	Township	Range	Lot	Ft. from N/S	Ft. from E/W	Latitude	Longitude	County
I	26	22S	31E		2340' FSL	330' FEL	32.36166978	-103.74113079	EDDY

First Take Point (FTP)

UL	Section	Township	Range	Lot	Ft. from N/S	Ft. from E/W	Latitude	Longitude	County
H	26	22S	31E		2538' FNL	330' FEL	32.36277107	-103.74113334	EDDY

Last Take Point (LTP)

UL	Section	Township	Range	Lot	Ft. from N/S	Ft. from E/W	Latitude	Longitude	County
A	23	22S	31E		100' FNL	330' FEL	32.38397217	-103.74114115	EDDY

Unitized Area or Area of Uniform Interest	Spacing Unit Type ☑ Horizontal ☐ Vertical	Ground Floor Elevation: 3517'

OPERATOR CERTIFICATIONS

I hereby certify that the information contained herein is true and complete to the best of my knowledge and belief, and, if the well is a vertical or directional well, that this organization either owns a working interest or unleased mineral interest in the land including the proposed bottom hole location or has a right to drill this well at this location pursuant to a contract with an owner of a working interest or unleased mineral interest, or to a voluntary pooling agreement or a compulsory pooling order heretofore entered by the division.

If this well is a horizontal well, I further certify that this organization has received the consent of at least one lessee or owner of a working interest or unleased mineral interest in each tract (in the target pool or formation) in which any part of the well's completed interval will be located or obtained a compulsory pooling order from the division.

Sara Guthrie 3/4/2025

Signature Date

Sara Guthrie

Printed Name

sara_guthrie@oxy.com

Email Address

SURVEYOR CERTIFICATIONS

I hereby certify that the well location shown on this plat surveys made by me or under my supervision, and that th my belief.

SURVEYOR CERTIFICATION
I hereby certify that the well location shown on this plat was plotted from field notes of actual surveys made by me or under my supervision, and that the same is true and correct to the best of my belief.

Lloyd P. Short

Date of Survey: AUGUST 2, 2023

Signature and Seal of Professional Surveyor

LLOYD P. SHORT NEW MEXICO 21653 PROFESSIONAL SURVEYOR

Signature and Seal of Professional Surveyor

Certificate Number: 21653

Date of Survey: August 3, 2023

Note: No allowable will be assigned to this completion until all interests have been consolidated or a non-standard unit has been approved by the division.

ACREAGE DEDICATION PLATS

This grid represents a standard section. You may superimpose a non-standard section, or larger area, over this grid. Operators must outline the dedicated acreage in a red box, clearly show the well surface location and bottom hole location, if it is directionally drilled, with the dimensions from the section lines in the cardinal directions. If this is a horizontal wellbore show on this plat the location of the First Take Point and Last Take Point, and the point within the Completed interval (other than the First Take Point or Last Take Point) that is closest to any outer boundary of the tract.

Surveyors shall use the latest United States government survey or dependent resurvey. Well locations will be in reference to the New Mexico Principal Meridian. If the land is not surveyed, contact the OCD Engineering Bureau. Independent subdivision surveys will not be acceptable.

BHL (NAD83)
X:724141.76' / Y:504006.57'
LAT:32.38419207 / LON:-103.74114135

BHL (NAD27)
X:682959.42' / Y:503946.16'
LAT:32.38406947 / LON:-103.74065231

LTP (NAD83)
X:724142.27' / Y:503926.57'
LAT:32.38397217 / LON:-103.74114115

LTP (NAD27)
X:682959.92' / Y:503866.16'
LAT:32.38384957 / LON:-103.74065212

PPP-1/PI-1 (NAD83)
X:724174.96' / Y:498751.64'
LAT:32.36974737 / LON:-103.74112804

PPP-1/PI-1 (NAD27)
X:682992.46' / Y:498691.37'
LAT:32.36962470 / LON:-103.74063958

FTP (NAD83)
X:724187.36' / Y:496213.67'
LAT:32.36277107 / LON:-103.74113334

FTP (NAD27)
X:683004.79' / Y:496153.47'
LAT:32.36264836 / LON:-103.74064515

KOP (NAD83)
X:724190.37' / Y:495813.03'
LAT:32.36166978 / LON:-103.74113079

KOP (NAD27)
X:683007.78' / Y:495752.84'
LAT:32.36154707 / LON:-103.74064264

SHL (NAD83)
X:723502.19' / Y:495703.85'
LAT:32.36138013 / LON:-103.74336141

SHL (NAD27)
X:682319.61' / Y:495643.66'
LAT:32.36125743 / LON:-103.74287322

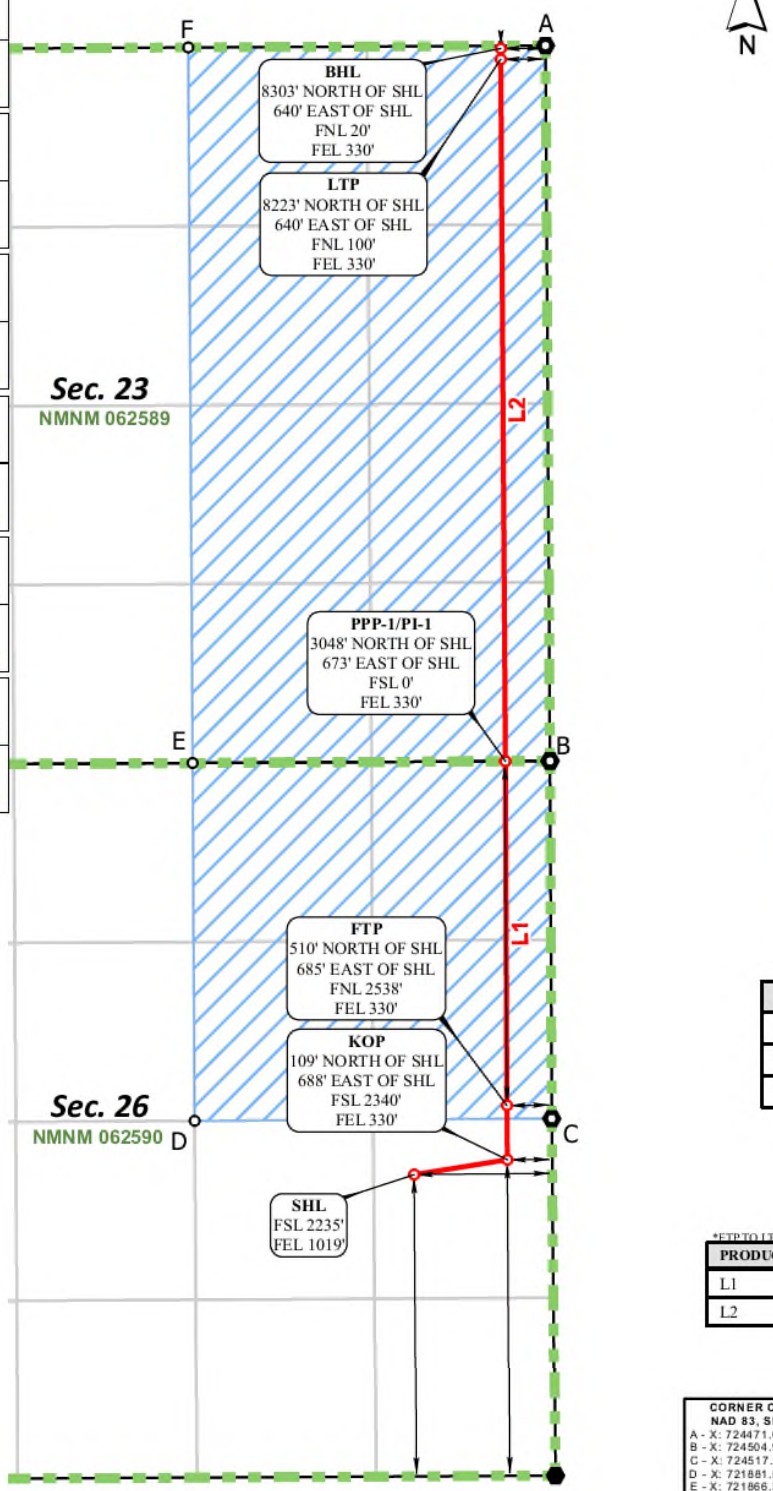

N

17 OPERATOR CERTIFICATION
I hereby certify that the information contained herein is true and complete to the best of my knowledge and belief, and that this organization either owns a working interest or unleased mineral interest in the land including the proposed bottom hole location or has a right to drill this well at this location pursuant to a contract with an owner of such a mineral or working interest, or to a voluntary pooling agreement or a compulsory pooling order heretofore entered by the division.

Roni Mathew 3/26/24
Signature Date

RONI MATHEW
Printed Name

roni_mathew@oxy.com
E-mail Address

18 SURVEYOR CERTIFICATION
I hereby certify that the well location shown on this plat was plotted from field notes of actual surveys made by me or under my supervision, and that the same is true and correct to the best of my belief.

Lloyd P. Short
Date of Survey: AUGUST 2, 2023
Signature and Seal of Professional Surveyor

LLOYD P. SHORT
NEW MEXICO
21653
PROFESSIONAL SURVEYOR

FEDERAL LEASE ID	LENGTH
NMNM062590	2538.05'
NMNM062589	5174.99'
TOTAL	7713.04'

*FTP TO LTP LINE BEARINGS

PRODUCTION LINE	BEARING/LENGTH
L1	N00°16'48"W ~ 2538.05'
L2	N00°21'43"W ~ 5174.99'

CORNER COORDINATES NAD 83, SPCS NM EAST	CORNER COORDINATES NAD 27, SPCS NM EAST
A - X: 724471.63' / Y: 504028.35'	A - X: 683289.28' / Y: 503967.93'
B - X: 724504.95' / Y: 498753.54'	B - X: 683322.45' / Y: 498693.27'
C - X: 724517.84' / Y: 496116.14'	C - X: 683335.27' / Y: 496055.94'
D - X: 721881.57' / Y: 496099.59'	D - X: 680699.00' / Y: 496039.39'
E - X: 721866.30' / Y: 498738.37'	E - X: 680683.81' / Y: 498678.10'
F - X: 721834.60' / Y: 504014.16'	F - X: 680652.27' / Y: 503953.75'

Drill Line Events · Section Corners · Drill Line · Dimension Lines · Federal Leases · HSU · HSU Corners

SHEET 1 OF 1
JOB No. OXY_0032_OW02_10759
REV 0 TCS 8/1/2023

All bearings and coordinates refer to New Mexico State Plane coordinate system, East Zone, U.S. Survey Feet.

Distances/areas relative to NAD 83 Combined Scale Factor: 0.99978405 Convergence Angle: 0.31759444°

C-102 Submit Electronically Via OCD Permitting	State of New Mexico Energy, Minerals & Natural Resources Department OIL CONSERVATION DIVISION	Revised July 9, 2024 Submittal Type: ☐ Initial Submittal ☒ Amended Report ☐ As Drilled

WELL LOCATION INFORMATION

API Number	Pool Code	Pool Name
30-015-56524	98123	WC-015 G-08 S233102C, WOLFCAMP

Property Code	Property Name	Well Number
337187	OLIVE WON UNIT	237H

OGRID No.	Operator Name	Ground Level Elevation
16696	OXY USA INC.	3517'

Surface Owner: ☐ State ☐ Fee ☐ Tribal ☒ Federal | Mineral Owner: ☐ State ☐ Fee ☐ Tribal ☒ Federal

Surface Location

UL	Section	Township	Range	Lot	Ft. from N/S	Ft. from E/W	Latitude	Longitude	County
I	26	22S	31E		2235' FSL	1019' FEL	32.36138013	-103.74336141	EDDY

Bottom Hole Location

UL	Section	Township	Range	Lot	Ft. from N/S	Ft. from E/W	Latitude	Longitude	County
A	23	22S	31E		20' FNL	330' FEL	32.38419207	-103.74114135	EDDY

Dedicated Acres	Infill or Defining Well	Defining Well API	Overlapping Spacing Unit (Y/N)	Consolidation Code
480.00	INFILL	36H - 30-015-56522	NO	N/A

Order Numbers. N/A | Well setbacks are under Common Ownership: ☐Yes ☒No

Kick Off Point (KOP)

UL	Section	Township	Range	Lot	Ft. from N/S	Ft. from E/W	Latitude	Longitude	County
I	26	22S	31E		2340' FSL	330' FEL	32.36166978	-103.74113079	EDDY

First Take Point (FTP)

UL	Section	Township	Range	Lot	Ft. from N/S	Ft. from E/W	Latitude	Longitude	County
H	26	22S	31E		2538' FNL	330' FEL	32.36277107	-103.74113334	EDDY

Last Take Point (LTP)

UL	Section	Township	Range	Lot	Ft. from N/S	Ft. from E/W	Latitude	Longitude	County
A	23	22S	31E		100' FNL	330' FEL	32.38397217	-103.74114115	EDDY

Unitized Area or Area of Uniform Interest	Spacing Unit Type	Ground Floor Elevation:
Y	☒ Horizontal ☐ Vertical	3517'

OPERATOR CERTIFICATIONS

I hereby certify that the information contained herein is true and complete to the best of my knowledge and belief, and, if the well is a vertical or directional well, that this organization either owns a working interest or unleased mineral interest in the land including the proposed bottom hole location or has a right to drill this well at this location pursuant to a contract with an owner of a working interest or unleased mineral interest, or to a voluntary pooling agreement or a compulsory pooling order heretofore entered by the division.

If this well is a horizontal well, I further certify that this organization has received the consent of at least one lessee or owner of a working interest or unleased mineral interest in each tract (in the target pool or formation) in which any part of the well's completed interval will be located or obtained a compulsory pooling order from the division.

Melissa Guidry 04/24/25

Signature Date

Melissa Guidry

Printed Name

melissa_guidry@oxy.com

Email Address

SURVEYOR CERTIFICATIONS

I hereby certify that the well location shown on this plat surveys made by me or under my supervision, and that th my belief.

Signature and Seal of Professional Surveyor

Certificate Number 21653

Date of Survey August 3, 2023

SURVEYOR CERTIFICATION

I hereby certify that the well location shown on this plat was plotted from field notes of actual surveys made by me or under my supervision, and that the same is true and correct to the best of my belief.

Lloyd P. Short

Date of Survey: AUGUST 2, 2023

Signature and Seal of Professional Surveyor

LLOYD P. SHORT NEW MEXICO 21653 PROFESSIONAL SURVEYOR

Note: No allowable will be assigned to this completion until all interests have been consolidated or a non-standard unit has been approved by the division.

ACREAGE DEDICATION PLATS

This grid represents a standard section. You may superimpose a non-standard section, or larger area, over this grid. Operators must outline the dedicated acreage in a red box, clearly show the well surface location and bottom hole location, if it is directionally drilled, with the dimensions from the section lines in the cardinal directions. If this is a horizontal wellbore show on this plat the location of the First Take Point and Last Take Point, and the point within the Completed interval (other than the First Take Point or Last Take Point) that is closest to any outer boundary of the tract.

Surveyors shall use the latest United States government survey or dependent resurvey. Well locations will be in reference to the New Mexico Principal Meridian. If the land is not surveyed, contact the OCD Engineering Bureau. Independent subdivision surveys will not be acceptable.

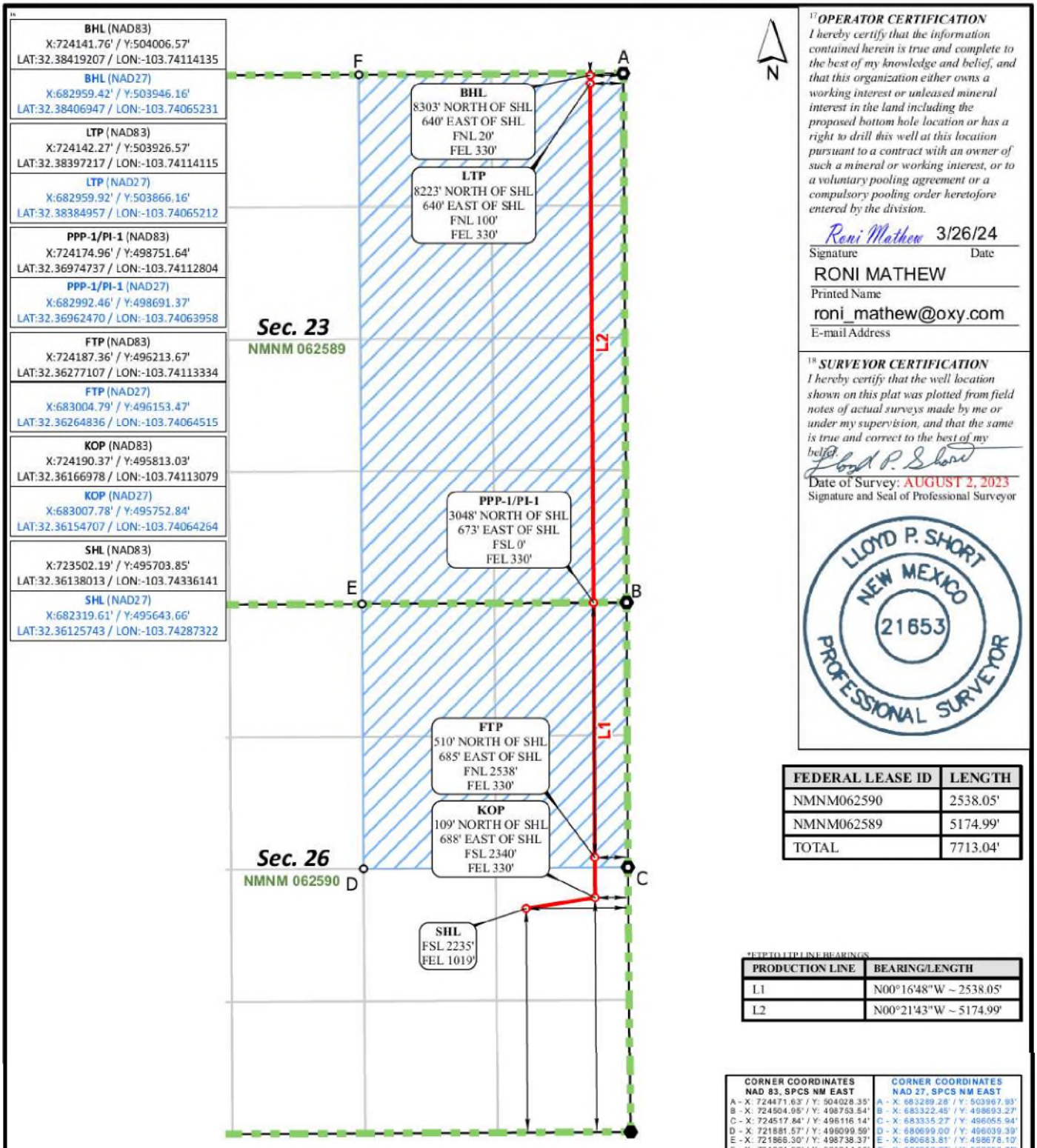

17 *OPERATOR CERTIFICATION*

I hereby certify that the information contained herein is true and complete to the best of my knowledge and belief, and that this organization either owns a working interest or unleased mineral interest in the land including the proposed bottom hole location or has a right to drill this well at this location pursuant to a contract with an owner of such a mineral or working interest, or to a voluntary pooling agreement or a compulsory pooling order heretofore entered by the division.

Roni Mathew 3/26/24
Signature Date

RONI MATHEW
Printed Name

roni_mathew@oxy.com
E-mail Address

18 *SURVEYOR CERTIFICATION*

I hereby certify that the well location shown on this plat was plotted from field notes of actual surveys made by me or under my supervision, and that the same is true and correct to the best of my belief.

Lloyd P. Short

Date of Survey: AUGUST 2, 2023
Signature and Seal of Professional Surveyor

LLOYD P. SHORT
NEW MEXICO
21653
PROFESSIONAL SURVEYOR

FEDERAL LEASE ID	LENGTH
NMNM062590	2538.05'
NMNM062589	5174.99'
TOTAL	7713.04'

*FTP TO LTP LINE BEARINGS

PRODUCTION LINE	BEARING/LENGTH
L1	N00°16'48"W ~ 2538.05'
L2	N00°21'43"W ~ 5174.99'

CORNER COORDINATES NAD 83, SPCS NM EAST	CORNER COORDINATES NAD 27, SPCS NM EAST
A - X: 724471.63' / Y: 504028.35'	A - X: 683289.28' / Y: 503967.93'
B - X: 724504.95' / Y: 498753.54'	B - X: 683322.45' / Y: 498693.27'
C - X: 724517.84' / Y: 496116.14'	C - X: 683335.27' / Y: 496055.94'
D - X: 721881.57' / Y: 496099.59'	D - X: 680699.00' / Y: 496039.39'
E - X: 721866.30' / Y: 498738.37'	E - X: 680683.81' / Y: 498678.10'
F - X: 721834.60' / Y: 504014.16'	F - X: 680652.27' / Y: 503953.75'

SHEET 1 OF 1
JOB No. OXY_0032_OW02_10759
REV 0 TCS 8/1/2023

All bearings and coordinates refer to New Mexico State Plane coordinate system, East Zone, U.S. Survey Feet.

Distances/areas relative to NAD 83 Combined Scale Factor: 0.99978405 Convergence Angle: 0.31759444°

LOST TANK AREA BATTERIES

BATTERY	AVG DRY BTU
*LOPER 34 STATE BATTERY	1290
FEDERAL 23-1 BATTERY	1319
FEDERAL 23-11 BATTERY	1277
FEDERAL 26 BATTERY	1238
FEDERAL 26-1 BATTERY	1332
CABIN LAKE 31 FEDERAL 6 BATTERY	1315
FEDERAL 12-04 BATTERY	1308
FEDERAL 1 BATTERY	1329
FEDERAL 12-01 BATTERY	1278
FEDERAL 12-14H BATTERY	1300
FEDERAL NEFF 25 BATTERY	1243
GETTY 24 FEDERAL 011 BATTERY	1329
LIVINGSTON 19 BATTERY	1278
LOST TANK 3 FEDERAL 1 BATTERY	1327
LOST TANK 3 FEDERAL 5 BATTERY	1323
LOST TANK 3 FEDERAL 23 SATELLITE	1257
LOST TANK 4 FEDERAL 1 BATTERY	1297
LOST TANK 4 FEDERAL 20 SATELLITE	1252
LOST TANK 4 FEDERAL 23 SATELLITE	1249
LOST TANK 33 FEDERAL 4 BATTERY	1278
LOST TANK 35 STATE 4 BATTERY	1263
MILLS 19-01 BATTERY	1287
PROXIMITY 30 FEDERAL 3 BATTERY	1268
STATE 2-3 BATTERY	1384
LOST TANK 30-19 BATTERY	1237
LOST TANK 18 CPF TRAIN #1	1248
LOST TANK 18 CPF TRAIN #2	1256
LOST TANK 18 CPF TRAIN #3	1324
*LOST TANK 25 CPF	1264
LOST TANK 5 CPF TRAIN #1	1292
LOST TANK 5 CPF TRAIN #2	1306

*estimated

MAILED 09/10/2025

To Company Name	To Name	To Address Line 1	To City	To State	To ZIP	Tracking Number
	MARSHALL AND WINSTON INC	PO BOX 50880	MIDLAND	TX	79710	_9414811898765479192274
	CIBOLO OIL AND GAS LLC	3600 BEE CAVE ROAD STE 102	WEST LAKE HILLS	TX	78746	_9414811898765479192816
ATTN COMMINGLING MANAGER	COG OPERATING LLC	600 W ILLINOIS AVE	MIDLAND	TX	79701	_9414811898765479192854
ATTN COMMINGLING MANAGER	BLM	620 E GREENE STREET	CARLSBAD	NM	88220	_9414811898765479192861
	LANELL JOY HONEYMAN	26 MEADOW BROOK PL	WOODLANDS	TX	77382	_9414811898765479192823
TRSTEE OF LESLIE ROBERT HONEYMAN TST	LANELL JOY HONEYMAN	406 SKYWOOD CIRCLE	MIDLAND	TX	79705	_9414811898765479192892
	VERITAS PERMIAN RESOURCES III LLC	PO BOX 10850	FORT WORTH	TX	76114	_9414811898765479192847
	White Horse Investments I LLC	3600 BEE CAVE ROAD STE 102	WEST LAKE HILLS	TX	78746	_9414811898765479192885
	Curlew Investments I LLC	3600 BEE CAVE ROAD STE 102	WEST LAKE HILLS	TX	78746	_9414811898765479192830
	Cibolo Brigham Oil and Gas LLC	3600 BEE CAVE ROAD STE 102	WEST LAKE HILLS	TX	78746	_9414811898765479192878
	LMB Properties I LLC	3600 BEE CAVE ROAD STE 102	WEST LAKE HILLS	TX	78746	_9414811898765479192717

OXY USA WTP Limited Partnership / OXY USA INC / OCCIDENTAL PERMIAN LTD
A subsidiary of Occidental Petroleum Corporation

5 Greenway Plaza, Suite 110, Houston, Texas 77046
P.O. Box 4294, Houston, Texas 77210-4294
Direct: 713.366.5106
Sandra_Musallam@oxy.com

September 10, 2025

Re: Request for Pool and Lease Commingling and Off-lease Measurement for Gas Production at Facilities in Lost Tank Area

Dear Interest Owner:

This is to advise you that OXY USA INC is filing an application with the NMOCD to amend PLC 844F for surface commingling for gas production at facilities in the Lost Tank area. A copy of the application submitted to the Division is attached. This commingle request includes the future wells within the same leases/CAs/PAs and pools of the wells listed in the attached application.

Each facility has a sales-quality orifice meter (BLM gas FMP or equivalent meter) that continuously measures gas volume before it leaves the facility. Any commingling of wells upstream of these meters has been approved according to the Orders for each individual facility (listed in the attached application).

Any objections or requests for a hearing regarding this application must be submitted to the New Mexico Oil Conservation Division Santa Fe Office within 20 Days from the date of this letter. Pursuant to Statewide rule 19.15.12.10(C)(4)(g) OXY USA INC requests the option to include additional pools or leases within the defined parameters set forth in the Order for future additions.

For questions regarding this application, please contact Sandra Musallam at (713) 366-5106.

Respectfully,

OXY USA INC
Sandra Musallam
Regulatory Engineer
Sandra_Musallam@oxy.com

Affidavit of Publication

STATE OF NEW MEXICO
COUNTY OF LEA

I, Daniel Russell, Publisher of the Hobbs News-Sun, a newspaper published at Hobbs, New Mexico, solemnly swear that the clipping attached hereto was published in the regular and entire issue of said newspaper, and not a supplement thereof for a period of 1 issue(s).

Beginning with the issue dated
August 17, 2025
and ending with the issue dated
August 17, 2025.

Publisher

Sworn and subscribed to before me this
17th day of August 2025.

Business Manager

My commission expires
January 29, 2027
(Seal)

STATE OF NEW MEXICO
NOTARY PUBLIC
GUSSIE RUTH BLACK
COMMISSION # 1087526
COMMISSION EXPIRES 01/29/2027

This newspaper is duly qualified to publish legal notices or advertisements within the meaning of Section 3, Chapter 167, Laws of 1937 and payment of fees for said publication has been made.

LEGAL NOTICE
August 17, 2025

Notice of Application for Surface Commingling

OXY USA INC located at 5 Greenway Plaza, Suite 110 Houston TX 77046 is applying to the NMOCD to amend the surface commingle permit PLC 844F for gas production for batteries in the Lost Tank area. The facilities are located in Eddy County in Sections 01, 02, 03, 04, 12, 13, 23, 24, 25, 26 and 35 in T22S R31E and Sections 33, 34 and 35 in T21S R31E and in Lea County in Sections 18, 19 and 30 in T22S R32E and Section 31 in T21S R32E. Wells going to the batteries are located in Eddy County in Sections 01, 02, 03, 04, 10, 11, 12, 23, 24, 25 and 26 in T22S R31E and Sections 33, 34 and 35 in T21S R31E and in Lea County in Sections 7, 8, 12, 13, 17, 18, 19 and 30 in T22S R32E and Sections 30 and 31 in T21S R32E. Production is from the Livingston Ridge;Delaware, Livingston Ridge;Bone Spring, Livingston Ridge;Delaware East, Lost Tank;Delaware, Lost Tank;Delaware West, Lost Tank;Wolfcamp, WC-015 G-07 S223112P;Bone Spring, Bilbrey Basin; Bone Spring South, Bilbrey Basin; Bone Spring, WC-025 G-09 S223219D; Wolfcamp, WC-025 G-09 S233216K; UPR Wolfcamp, WC 22S31E13;Wolfcamp, WC-025 G-08 S243217P; UPR Wolfcamp, WC-015 G-08 S233102C;Wolfcamp and Los Medanos;Wolfcamp pools.

Pursuant to Statewide Rule 19.15.12.10, interested parties must file objections or requests for hearing in writing with the division's Santa Fe office within 20 days after publication, or the NMOCD may approve the application.

For questions pertaining to the application, please contact Sandra Musallam at (713) 366-5106.
#00303619

67111848 00303619

TALENT ACQUISITION
OCCIDENTAL PERMIAN
5 GREENWAY PLAZA, STE 110
HOUSTON, TX 77046

Affidavit of Publication

No. 59470

State of New Mexico Publisher

County of Eddy:

Adrian Hedden

being duly sworn, sayes that he is the **Publisher**

of the Carlsbad Current Argus, a weekly newspaper of general circulation, published in English at Carlsbad, said county and state, and that the hereto attached

Legal Ad

was published in a regular and entire issue of the said Carlsbad Current Argus, a weekly newspaper duly qualified for that purpose within the meaning of Chapter 167 of the 1937 Session Laws of the state of New Mexico for

1 Consecutive weeks/day on the same day as follows:

First Publication August 21, 2025

Second Publication

Third Publication

Fourth Publication

Fifth Publication

Sixth Publication

Seventh Publication

Eighth Publication

Subscribed ans sworn before me this

25th day of September 2025

LATISHA ROMINE
Notary Public, State of New Mexico
Commission No. 1076338
My Commission Expires
05-12-2027

Latisha Romine

Latisha Romine

Notary Public, Eddy County, New Mexico

Copy of Publication:

Notice of Application for Surface Commingling

OXY USA INC located at 5 Greenway Plaza, Suite 110 Houston TX 77046 is applying to the NMOCD to amend the surface commingle permit PLC 844F for gas production for batteries in the Lost Tank area. The facilities are located in Eddy County in Sections 01, 02, 03, 04, 12, 13, 23, 24, 25, 26 and 35 in T22S R31E and Sections 33, 34 and 35 in T21S R31E and in Lea County in Sections 5, 18, 19 and 30 in T22S R32E and Section 31 in T21S R32E. Wells going to the batteries are located in Eddy County in Sections 01, 02, 03, 04, 10, 11, 12, 23, 24, 25 and 26 in T22S R31E and Sections 33, 34 and 35 in T21S R31E and in Lea County in Sections 6, 7, 8, 12, 13, 17, 18, 19 and 30 in T22S R32E and Sections 19, 30 and 31 in T21S R32E. Production is from the Livingston Ridge;Delaware, Livingston Ridge;Bone Spring, Livingston Ridge;Delaware East, Lost Tank:Delaware, Lost Tank;Delaware West, Lost Tank;Wolfcamp, WC-015 G-07 S223112P;Bone Spring, Bilbrey Basin; Bone Spring South, Bilbrey Basin; Bone Spring, WC-025 G-09 S223219D; Wolfcamp, WC-025 G-09 S233216K; UPR Wolfcamp, WC 22S31E13;Wolfcamp, WC-025 G-08 S243217P; UPR Wolfcamp, WC-015 G-08 S233102C;Wolfcamp, WC-025 G-09 S213232A; UPR Wolfcamp and Los Medanos;Wolfcamp pools.

Pursuant to Statewide Rule 19.15.12.10, interested parties must file objections or requests for hearing in writing with the divisions Santa Fe office within 20 days after publication, or the NMOCD may approve the application.

For questions pertaining to the application, please contact Sandra Musallam at (713) 366-5106.
59470-Published in Carlsbad Current Argus Aug. 21, 2025.

WELL NAME	API	SURFACE LOCATION	POOL	POOL CODE	COMMENTS
OLIVE WON UNIT 231H	30-015-56502	K-26-22S-31E	WC-015 G-08 S233102C; WOLFCAMP	98123	ADD
OLIVE WON UNIT 232H	30-015-56503	K-26-22S-31E	WC-015 G-08 S233102C; WOLFCAMP	98123	ADD
OLIVE WON UNIT 233H	30-015-56509	J-26-22S-31E	WC-015 G-08 S233102C; WOLFCAMP	98123	ADD
OLIVE WON UNIT 234H (name change pending from EVIL OLIVE 26_23 FED COM 34H)	30-015-56510	J-26-22S-31E	WC-015 G-08 S233102C; WOLFCAMP	98123	ADD
OLIVE WON UNIT 235H (name change pending from EVIL OLIVE 26_23 FED COM 35H)	30-015-56521	J-26-22S-31E	WC-015 G-08 S233102C; WOLFCAMP	98123	ADD
OLIVE WON UNIT 236H (name change pending from EVIL OLIVE 26_23 FED COM 36H)	30-015-56522	I-26-22S-31E	WC-015 G-08 S233102C; WOLFCAMP	98123	ADD
OLIVE WON UNIT 237H (name change pending from EVIL OLIVE 26_23 FED COM 37H)	30-015-56524	I-26-22S-31E	WC-015 G-08 S233102C; WOLFCAMP	98123	ADD
OLIVE WON UNIT 33H	30-015-55187	J-26-22S-31E	WC-015 G-08 S233102C; WOLFCAMP	98123	
OLIVE WON UNIT 32H	30-015-55179	K-26-22S-31E	WC-015 G-08 S233102C; WOLFCAMP	98123	
OLIVE WON UNIT 34H	30-015-55189	J-26-22S-31E	WC-015 G-08 S233102C; WOLFCAMP	98123	
OLIVE WON UNIT 31H	30-015-55177	K-26-22S-31E	WC-015 G-08 S233102C; WOLFCAMP	98123	
OLIVE WON UNIT 35H	30-015-55215	J-26-22S-31E	WC-015 G-08 S233102C; WOLFCAMP	98123	
OLIVE WON UNIT 36H	30-015-55180	I-26-22S-31E	WC-015 G-08 S233102C; WOLFCAMP	98123	
OLIVE WON UNIT 37H	30-015-55181	I-26-22S-31E	WC-015 G-08 S233102C; WOLFCAMP	98123	
OLIVE WON UNIT 4H	30-015-55182	I-26-22S-31E	LIVINGSTON RIDGE; BONE SPRING	39350	
OLIVE WON UNIT 71H	30-015-55183	K-26-22S-31E	LIVINGSTON RIDGE; BONE SPRING	39350	
OLIVE WON UNIT 131H	30-015-54746	N-25-22S-31E	WC 22S31E13; WOLFCAMP	98351	
OLIVE WON UNIT 132H	30-015-54747	N-25-22S-31E	WC 22S31E13; WOLFCAMP	98351	
OLIVE WON UNIT133H	30-015-54748	O-25-22S-31E	WC 22S31E13; WOLFCAMP	98351	
OLIVE WON UNIT 134H	30-015-54749	O-25-22S-31E	WC 22S31E13; WOLFCAMP	98351	
OLIVE WON UNIT 135H	30-015-54755	P-25-22S-31E	WC 22S31E13; WOLFCAMP	98351	
OLIVE WON UNIT 136H	30-015-54756	P-25-22S-31E	LIVINGSTON RIDGE; BONE SPRING	39350	
OLIVE WON UNIT 137H	30-015-54757	O-25-22S-31E	WC 22S31E13; WOLFCAMP	98351	
OLIVE WON UNIT 174H	30-015-54734	P-25-22S-31E	WC 22S31E13; WOLFCAMP	98351	
OLIVE WON UNIT 101H	30-015-56138	N-25-22S-31E	LIVINGSTON RIDGE; BONE SPRING	39350	
OLIVE WON UNIT 102H	30-015-56139	N-25-22S-31E	LIVINGSTON RIDGE; BONE SPRING	39350	
OLIVE WON UNIT 103H	30-015-56140	P-25-22S-31E	LIVINGSTON RIDGE; BONE SPRING	39350	
OLIVE WON UNIT 104H	30-015-56142	P-25-22S-31E	LIVINGSTON RIDGE; BONE SPRING	39350	
OLIVE WON UNIT 105H	30-015-54655	P-25-22S-31E	LIVINGSTON RIDGE; BONE SPRING	39350	
JACQUE AQJ STATE 003	30-015-30635	N-34-21S-31E	LOST TANK; DELAWARE, WEST	96582	Will submit sundry for PLC 844F/G with copy c
LOPER 34 STATE 001	30-015-29988	E-34-21S-31E	LOST TANK; DELAWARE, WEST	96582	
GOLD LOG 4_9 FED COM 71H	30-025-52224	D-04-22S-32E	BILBREY BASIN; BONE SPRING	5695	
GOLD LOG 4_9 FED COM 72H	30-025-52190	D-04-22S-32E	BILBREY BASIN; BONE SPRING	5695	
GOLD LOG 4_9 FED COM 73H	30-025-52208	B-04-22S-32E	BILBREY BASIN; BONE SPRING	5695	
GOLD LOG 4_9 FED COM 74H	30-025-52191	B-04-22S-32E	BILBREY BASIN; BONE SPRING	5695	
GOLD LOG 4_9 FED COM 311H	30-025-52225	D-04-22S-32E	WC-025 G-09 S233216K;UPR WOLFCAMP	98166	
GOLD LOG 4_9 FED COM 313H	30-025-52192	B-04-22S-32E	WC-025 G-09 S233216K;UPR WOLFCAMP	98166	
GOLD LOG 4_9 FED COM 32H	30-025-52187	D-04-22S-32E	WC-025 G-09 S233216K;UPR WOLFCAMP	98166	
GOLD LOG 4_9 FED COM 33H	30-025-52188	D-04-22S-32E	WC-025 G-09 S233216K;UPR WOLFCAMP	98166	
GOLD LOG 4_9 FED COM 34H	30-025-52189	B-04-22S-32E	WC-025 G-09 S233216K;UPR WOLFCAMP	98166	
GOLD LOG 4_9 FED COM 35H	30-025-52186	B-04-22S-32E	WC-025 G-09 S233216K;UPR WOLFCAMP	98166	
GOLD LOG 4_9 FED COM 22H	30-025-53818	D-04-22S-32E	BILBREY BASIN; BONE SPRING	5695	
GOLD LOG 4_9 FED COM 12H	30-025-53809	D-04-22S-32E	BILBREY BASIN; BONE SPRING	5695	
GOLD LOG 4_9 FED COM 23H	30-025-53812	D-04-22S-32E	BILBREY BASIN; BONE SPRING	5695	
GOLD LOG 4_9 FED COM 01H	30-025-53815	D-04-22S-32E	BILBREY BASIN; BONE SPRING	5695	
GOLD LOG 4_9 FED COM 26H	30-025-53814	B-04-22S-32E	BILBREY BASIN; BONE SPRING	5695	
GOLD LOG 4_9 FED COM 16H	30-025-53811	D-04-22S-32E	BILBREY BASIN; BONE SPRING	5695	
GOLD LOG 4_9 FED COM 02H	30-025-53807	D-04-22S-32E	BILBREY BASIN; BONE SPRING	5695	
GOLD LOG 4_9 FED COM 13H	30-025-53817	D-04-22S-32E	BILBREY BASIN; BONE SPRING	5695	
GOLD LOG 4_9 FED COM 04H	30-025-53816	B-04-22S-32E	BILBREY BASIN; BONE SPRING	5695	
GOLD LOG 4_9 FED COM 25H	30-025-53813	B-04-22S-32E	BILBREY BASIN; BONE SPRING	5695	
GOLD LOG 4_9 FED COM 03H	30-025-53808	B-04-22S-32E	BILBREY BASIN; BONE SPRING	5695	
REGAL LAGER 31 19 FEDERAL COM 34H	30-025-52491	A-06-22S-32E	WC-025 G-09 S213232A; UPR WOLFCAMP	98313	
REGAL LAGER 31 19 FEDERAL COM 35H	30-025-52492	A-06-22S-32E	WC-025 G-09 S213232A; UPR WOLFCAMP	98313	
REGAL LAGER 31 19 FEDERAL COM 36H	30-025-52493	A-06-22S-32E	WC-025 G-09 S213232A; UPR WOLFCAMP	98313	
REGAL LAGER 31 19 FEDERAL COM 31H	30-025-52488	N-31-21S-32E	WC-025 G-09 S213232A; UPR WOLFCAMP	98313	
REGAL LAGER 31 19 FEDERAL COM 32H	30-025-52489	N-31-21S-32E	WC-025 G-09 S213232A; UPR WOLFCAMP	98313	
REGAL LAGER 31 19 FEDERAL COM 33H	30-025-52490	N-31-21S-32E	WC-025 G-09 S213232A; UPR WOLFCAMP	98313	
REGAL LAGER 31 19 FEDERAL COM 71H	30-025-52620	N-31-21S-32E	BILBREY BASIN; BONE SPRING	5695	
REGAL LAGER 31 19 FEDERAL COM 72H	30-025-52513	N-31-21S-32E	BILBREY BASIN; BONE SPRING	5695	
REGAL LAGER 31 19 FEDERAL COM 73H	30-025-52514	A-06-22S-32E	BILBREY BASIN; BONE SPRING	5695	
REGAL LAGER 31 19 FEDERAL COM 74H	30-025-52515	A-06-22S-32E	BILBREY BASIN; BONE SPRING	5695	
LOST TANK 30_19 FEDERAL COM 22H	30-025-47543	C-19-22S-32E	BILBREY BASIN;BONE SPRING, SOUTH	97366	
LOST TANK 30_19 FEDERAL COM 11H	30-025-47941	D-19-22S-32E	BILBREY BASIN;BONE SPRING, SOUTH	97366	
LOST TANK 30_19 FEDERAL COM 21H	30-025-47942	C-19-22S-32E	BILBREY BASIN;BONE SPRING, SOUTH	97366	
LOST TANK 30_19 FEDERAL COM 32H	30-025-47944	D-19-22S-32E	BILBREY BASIN;BONE SPRING, SOUTH	97366	
LOST TANK 30_19 FEDERAL COM 71H	30-025-47945	D-19-22S-32E	BILBREY BASIN;BONE SPRING, SOUTH	97366	
LOST TANK 30_19 FEDERAL COM 33H	30-025-48464	D-19-22S-32E	WC-025 G-09 S223219D;WOLFCAMP	98296	
LOST TANK 30_19 FEDERAL COM 41H	30-025-48691	D-19-22S-32E	WC-025 G-09 S223219D;WOLFCAMP	98296	
TOP SPOT 12_13 FED COM 22H	30-015-47889	N-13-22S-31E	BILBREY BASIN; BONE SPRING	5695	
TOP SPOT 12_13 FED COM 23H	30-015-47885	N-13-22S-31E	BILBREY BASIN; BONE SPRING	5695	
TOP SPOT 12_13 FED COM 24H	30-015-47954	P-13-22S-31E	BILBREY BASIN; BONE SPRING	5695	
TOP SPOT 12_13 FED COM 25H	30-015-47639	O-13-22S-31E	BILBREY BASIN; BONE SPRING	5695	
TOP SPOT 12_13 FED COM 26H	30-015-47888	O-13-22S-31E	BILBREY BASIN; BONE SPRING	5695	
TOP SPOT 12_13 FED COM 33H	30-015-47953	P-13-22S-31E	BILBREY BASIN; BONE SPRING	5695	
TOP SPOT 12_13 FED COM 1H	30-015-48594	N-13-22S-31E	BILBREY BASIN;BONE SPRING	5695	
TOP SPOT 12_13 FED COM 11H	30-015-48595	N-13-22S-31E	BILBREY BASIN;BONE SPRING	5695	
TOP SPOT 12_13 FED COM 21H	30-015-47771	N-13-22S-31E	BILBREY BASIN;BONE SPRING	5695	
TOP SPOT 12_13 FED COM 31H	30-015-48597	N-13-22S-31E	WC 22S31E13;WOLFCAMP	98351	
TOP SPOT 12_13 FED COM 32H	30-015-48596	N-13-22S-31E	WC 22S31E13;WOLFCAMP	98351	
TOP SPOT 12_13 FED COM 34H	30-015-47949	O-13-22S-31E	WC 22S31E13;WOLFCAMP	98351	
TOP SPOT 12_13 FED COM 35H	30-015-47887	P-13-22S-31E	WC 22S31E13;WOLFCAMP	98351	
TOP SPOT 12_13 FED COM 311H	30-015-47627	N-13-22S-31E	WC 22S31E13;WOLFCAMP	98351	
TOP SPOT 12_13 FED COM 312H	30-015-47626	O-13-22S-31E	WC 22S31E13;WOLFCAMP	98351	
TOP SPOT 12_13 FED COM 313H	30-015-47625	P-13-22S-31E	WC 22S31E13;WOLFCAMP	98351	
LOST TANK 30-19 FEDERAL COM #001H	30-025-46474	D-19-22S-32E	BILBREY BASIN;BONE SPRING, SOUTH	97366	
LOST TANK 30-19 FEDERAL COM #031H	30-025-45182	D-19-22S-32E	WC-025 G-09 S223219D;WOLFCAMP	98296	
DR PI FEDERAL UNIT 17_8 021H	30-025-48282	M-17-22S-32E	BILBREY BASIN;BONE SPRING, SOUTH	97366	
DR PI FEDERAL UNIT 17_8 023H	30-025-48947	M-17-22S-32E	BILBREY BASIN;BONE SPRING, SOUTH	97366	
DR PI FEDERAL UNIT 17_8 025H	30-025-48949	O-17-22S-32E	BILBREY BASIN;BONE SPRING, SOUTH	97366	
DR PI FEDERAL UNIT 17_8 026H	30-025-48950	O-17-22S-32E	BILBREY BASIN;BONE SPRING, SOUTH	97366	
DR PI FEDERAL UNIT 17_8 031H	30-025-49147	M-17-22S-32E	WC-025 G-09 S233216K;UPR WOLFCAMP	98166	
DR PI FEDERAL UNIT 17_8 032H	30-025-49148	M-17-22S-32E	WC-025 G-09 S233216K;UPR WOLFCAMP	98166	
DR PI FEDERAL UNIT 17_8 034H	30-025-48951	O-17-22S-32E	WC-025 G-09 S233216K;UPR WOLFCAMP	98166	
DR PI FEDERAL UNIT 17_8 035H	30-025-48952	O-17-22S-32E	BILBREY BASIN;BONE SPRING, SOUTH	97366	
DR PI FEDERAL UNIT 17_8 311H	30-025-49152	M-17-22S-32E	BILBREY BASIN;BONE SPRING, SOUTH	97366	
DR PI FEDERAL UNIT 17_8 312H	30-025-48955	O-17-22S-32E	BILBREY BASIN;BONE SPRING, SOUTH	97366	
DR PI FEDERAL UNIT 17_8 11H	30-025-48944	N-17-22S-32E	BILBREY BASIN;BONE SPRING, SOUTH	97366	
DR PI FEDERAL UNIT 17_8 12H	30-025-48945	N-17-22S-32E	BILBREY BASIN;BONE SPRING, SOUTH	97366	
DR PI FEDERAL UNIT 17_8 24H	30-025-48948	O-17-22S-32E	BILBREY BASIN;BONE SPRING, SOUTH	97366	

DR PI FEDERAL UNIT 17_8 71H	30-025-49150	N-17-22S-32E	BILBREY BASIN;BONE SPRING, SOUTH	97366
DR PI FEDERAL UNIT 17_8 72H	30-025-49151	N-17-22S-32E	BILBREY BASIN;BONE SPRING, SOUTH	97366
DR PI FEDERAL UNIT 17_8 73H	30-025-48953	P-17-22S-32E	BILBREY BASIN;BONE SPRING, SOUTH	97366
DR PI FEDERAL UNIT 17_8 74H	30-025-48954	P-17-22S-32E	BILBREY BASIN;BONE SPRING, SOUTH	97366
DR PI FEDERAL UNIT 18-7 021H	30-025-47835	M-18-22S-32E	BILBREY BASIN;BONE SPRING	5695
DR PI FEDERAL UNIT 18-7 025H	30-025-48159	P-18-22S-32E	BILBREY BASIN;BONE SPRING	5695
DR PI FEDERAL UNIT 18-7 031H	30-025-48160	N-18-22S-32E	WC-025 G-09 S223219D;WOLFCAMP	98296
DR PI FEDERAL UNIT 18-7 032H	30-025-48024	N-18-22S-32E	WC-025 G-09 S223219D;WOLFCAMP	98296
DR PI FEDERAL UNIT 18-7 034H	30-025-48025	O-18-22S-32E	WC-025 G-09 S223219D;WOLFCAMP	98296
DR PI FEDERAL UNIT 18-7 311H	30-025-48166	N-18-22S-32E	BILBREY BASIN;BONE SPRING	5695
DR PI FEDERAL UNIT 18-7 312H	30-025-48167	O-18-22S-32E	BILBREY BASIN;BONE SPRING	5695
DR PI FEDERAL UNIT 18-7 313H	30-025-48168	O-18-22S-32E	BILBREY BASIN;BONE SPRING	5695
DR PI FEDERAL UNIT 18-7 22H	30-025-48157	M-18-22S-32E	BILBREY BASIN;BONE SPRING	5695
DR PI FEDERAL UNIT 18-7 24H	30-025-47867	P-18-22S-32E	BILBREY BASIN;BONE SPRING	5695
DR PI FEDERAL UNIT 18-7 71H	30-025-48162	M-18-22S-32E	BILBREY BASIN;BONE SPRING	5695
DR PI FEDERAL UNIT 18-7 72H	30-025-48163	M-18-22S-32E	BILBREY BASIN;BONE SPRING	5695
DR PI FEDERAL UNIT 18_7 IPP 11H	30-025-54178	N-18-22S-32E	BILBREY BASIN;BONE SPRING, SOUTH	97366
DR PI FEDERAL UNIT 18_7 IPP 01H	30-025-54209	N-18-22S-32E	BILBREY BASIN;BONE SPRING, SOUTH	97366
DR PI FEDERAL UNIT 18_7 IPP 12H	30-025-54179	N-18-22S-32E	BILBREY BASIN;BONE SPRING, SOUTH	97366
DR PI FEDERAL UNIT 18_7 IPP 04H	30-025-54177	P-18-22S-32E	BILBREY BASIN;BONE SPRING, SOUTH	97366
DR PI FEDERAL UNIT 18_7 IPP 02H	30-025-54175	N-18-22S-32E	BILBREY BASIN;BONE SPRING, SOUTH	97366
DR PI FEDERAL UNIT 18_7 IPP 03H	30-025-54176	P-18-22S-32E	BILBREY BASIN;BONE SPRING, SOUTH	97366
DR PI FEDERAL UNIT 18_7 IPP 15H	30-025-54180	P-18-22S-32E	BILBREY BASIN;BONE SPRING, SOUTH	97366
LOST TANK 3 FEDERAL 001	3001529638	D-03-22S-31E	LOST TANK; DELAWARE, WEST	96582
LOST TANK 3 FEDERAL 002	3001529682	C-03-22S-31E	LOST TANK; DELAWARE, WEST	96582
LOST TANK 3 FEDERAL 003	3001529859	F-03-22S-31E	LOST TANK; DELAWARE, WEST	96582
LOST TANK 3 FEDERAL 004	3001530418	E-03-22S-31E	LOST TANK; DELAWARE, WEST	96582
LOST TANK 3 FEDERAL 023	30-015-35354	E-19-22S-32E	LOST TANK; WOLFCAMP	97573
LOST TANK 4 FEDERAL 001	3001528727	C-04-22S-31E	LOST TANK; DELAWARE, WEST	96582
LOST TANK 4 FEDERAL 002	3001529611	B-04-22S-31E	LOST TANK; DELAWARE, WEST	96582
LOST TANK 4 FEDERAL 003	3001529617	A-04-22S-31E	LOST TANK; DELAWARE, WEST	96582
LOST TANK 4 FEDERAL 005	3001529732	F-04-22S-31E	LOST TANK; DELAWARE, WEST	96582
LOST TANK 4 FEDERAL 006	3001529733	G-04-22S-31E	LOST TANK; DELAWARE, WEST	96582
LOST TANK 4 FEDERAL 007	3001530414	H-04-22S-31E	LOST TANK; DELAWARE, WEST	96582
LOST TANK 4 FEDERAL 008	3001537923	H-04-22S-31E	LOST TANK; DELAWARE, WEST	96582
LOST TANK 4 FEDERAL 011	3001537954	F-04-22S-31E	LOST TANK; DELAWARE, WEST	96582
LOST TANK 4 FEDERAL 012	3001537955	K-04-22S-31E	LOST TANK; DELAWARE, WEST	96582
LOST TANK 4 FEDERAL 013	3001537956	K-04-22S-31E	LOST TANK; DELAWARE, WEST	96582
LOST TANK 4 FEDERAL 015	3001537894	I-04-22S-31E	LOST TANK; DELAWARE, WEST	96582
LOST TANK 4 FEDERAL 016	3001537957	I-04-22S-31E	LOST TANK; DELAWARE, WEST	96582
LOST TANK 4 FEDERAL 017	3001537958	I-04-22S-31E	LOST TANK; DELAWARE, WEST	96582
LOST TANK 4 FEDERAL 018	3001537895	K-04-22S-31E	LOST TANK; DELAWARE, WEST	96582
LOST TANK 4 FEDERAL 019	3001537896	K-04-22S-31E	LOST TANK; DELAWARE, WEST	96582
LOST TANK 4 FEDERAL 020	30-015-34918	E-19-22S-32E	LOST TANK; WOLFCAMP	97573
LOST TANK 4 FEDERAL 023	30-015-40775	E-19-22S-32E	LOST TANK; WOLFCAMP	97573
STATE 2 001	3001526894	P-02-22S-31E	LOST TANK; DELAWARE	40299
STATE 2 002	3001528416	O-02-22S-31E	LOST TANK; DELAWARE	40299
STATE 2 004	30-015-28456	J-02-22S-31E	LOST TANK; DELAWARE	40299
FEDERAL 23 001	3001526377	P-23-22S-31E	LIVINGSTON RIDGE;DELAWARE	39360
FEDERAL 23 002	3001526932	I-23-22S-31E	LIVINGSTON RIDGE;DELAWARE	39360
FEDERAL 23 003	3001526400	H-23-22S-31E	LIVINGSTON RIDGE;DELAWARE	39360
FEDERAL 23 004	3001537336	P-23-22S-31E	LIVINGSTON RIDGE;DELAWARE	39360
FEDERAL 23 005	3001526681	A-23-22S-31E	LIVINGSTON RIDGE;DELAWARE	39360
FEDERAL 23 006	3001537340	I-23-22S-31E	LIVINGSTON RIDGE;DELAWARE	39360
FEDERAL 23 009	3001537334	H-23-22S-31E	LIVINGSTON RIDGE;DELAWARE	39360
FEDERAL 23 016	3001537341	A-23-22S-31E	LIVINGSTON RIDGE;DELAWARE	39360
FEDERAL 23 007H	3001539436	C-26-22S-31E	LIVINGSTON RIDGE;DELAWARE	39360
FEDERAL 23 011H	3001539437	D-26-22S-31E	LIVINGSTON RIDGE;DELAWARE	39360
FEDERAL 23 012H	3001541803	D-26-22S-31E	LIVINGSTON RIDGE;DELAWARE	39360
FEDERAL 23 013H	3001541636	C-26-22S-31E	LIVINGSTON RIDGE;DELAWARE	39360
FEDERAL 26 12H	3001541573	P-23-22S-31E	LIVINGSTON RIDGE;DELAWARE	39360
FEDERAL 26 13H	3001541600	B-26-22S-31E	LIVINGSTON RIDGE;DELAWARE	39360
FEDERAL 26 004	3001526866	D-26-22S-31E	LIVINGSTON RIDGE;DELAWARE	39360
FEDERAL 26 005	3001526854	B-26-22S-31E	LIVINGSTON RIDGE;DELAWARE	39360
FEDERAL 26 006	3001526940	E-26-22S-31E	LIVINGSTON RIDGE;DELAWARE	39360
FEDERAL 26 007	3001526941	F-26-22S-31E	LIVINGSTON RIDGE;DELAWARE	39360
CABIN LAKE 31 FED COM 6H	3002541088	M-31-21S-32E	LOST TANK; DELAWARE	40299
FEDERAL 12 004	3001526859	E-12-22S-31E	LIVINGSTON RIDGE; DELAWARE	39360
FEDERAL 12 005	3001526860	D-12-22S-31E	LIVINGSTON RIDGE; DELAWARE	39360
FEDERAL 12 008	3001526942	C-12-22S-31E	LIVINGSTON RIDGE; DELAWARE	39360
FEDERAL 1 005	3001526909	M-01-22S-31E	LOST TANK; DELAWARE	40299
FEDERAL 1 006	3001526910	N-01-22S-31E	LOST TANK; DELAWARE	40299
FEDERAL 1 007	3001526988	O-01-22S-31E	LOST TANK; DELAWARE	40299
FEDERAL 12 002	3001526780	L-12-22S-31E	LIVINGSTON RIDGE; DELAWARE	39360
FEDERAL 12 003	3001526858	N-12-22S-31E	LIVINGSTON RIDGE; DELAWARE	39360
FEDERAL 12 009	3001526971	O-12-22S-31E	LIVINGSTON RIDGE; DELAWARE	39360
FEDERAL 12-14H	3001540821	P-12-22S-31E	WC-015 G-07 S223112P; BONE SPRING	98034
NEFF 25 FEDERAL 5H	3001541031	C-25-22S-31E	LIVINGSTON RIDGE; DELAWARE	39360
NEFF 25 FEDERAL 9H	3001541459	E-25-22S-31E	LIVINGSTON RIDGE; BONESPRING	39350
NEFF FEDERAL 002	3001526639	E-25-22S-31E	LIVINGSTON RIDGE; DELAWARE	39360
GETTY 24 FEDERAL 011	3001531162	I-24-22S-31E	LIVINGSTON RIDGE; DELAWARE	39360
LIVINGSTON RIDGE 18 FEDERAL 004	3002536012	M-18-22S-32E	LIVINGSTON RIDGE; DELAWARE, EAST	39366
LIVINGSTON RIDGE 18 FEDERAL 006	3002536295	L-18-22S-32E	LIVINGSTON RIDGE; DELAWARE, EAST	39366
LIVINGSTON RIDGE 19 FEDERAL 001	3002535960	D-19-22S-32E	LIVINGSTON RIDGE; DELAWARE, EAST	39366
LOST TANK 10 FEDERAL 001	3001537959	P-03-22S-31E	LOST TANK; DELAWARE, WEST	96582
LOST TANK 10 FEDERAL 002	3001537960	O-03-22S-31E	LOST TANK; DELAWARE, WEST	96582
LOST TANK 10 FEDERAL 003	3001537897	O-03-22S-31E	LOST TANK; DELAWARE, WEST	96582
LOST TANK 10 FEDERAL 004	3001537961	P-03-22S-31E	LOST TANK; DELAWARE, WEST	96582
LOST TANK 10 FEDERAL 005	3001537924	P-03-22S-31E	LOST TANK; DELAWARE, WEST	96582
LOST TANK 11 FEDERAL 001	3001537962	P-03-22S-31E	LOST TANK; DELAWARE, WEST	96582
LOST TANK 3 FEDERAL 005	3001530586	H-03-22S-31E	LOST TANK; DELAWARE, WEST	96582
LOST TANK 3 FEDERAL 006	3001531887	A-03-22S-31E	LOST TANK; DELAWARE, WEST	96582
LOST TANK 3 FEDERAL 007	3001532167	B-03-22S-31E	LOST TANK; DELAWARE, WEST	96582
LOST TANK 3 FEDERAL 008	3001532168	H-03-22S-31E	LOST TANK; DELAWARE, WEST	96582
LOST TANK 3 FEDERAL 009	3001532169	G-03-22S-31E	LOST TANK; DELAWARE, WEST	96582
LOST TANK 3 FEDERAL 010	3001532345	B-03-22S-31E	LOST TANK; DELAWARE, WEST	96582
LOST TANK 3 FEDERAL 011	3001532725	I-03-22S-31E	LOST TANK; DELAWARE, WEST	96582
LOST TANK 3 FEDERAL 012	3001532726	P-03-22S-31E	LOST TANK; DELAWARE, WEST	96582
LOST TANK 3 FEDERAL 013	3001537950	J-03-22S-31E	LOST TANK; DELAWARE, WEST	96582
LOST TANK 3 FEDERAL 014	3001537918	J-03-22S-31E	LOST TANK; DELAWARE, WEST	96582
LOST TANK 3 FEDERAL 015	3001537951	E-03-22S-31E	LOST TANK; DELAWARE, WEST	96582
LOST TANK 3 FEDERAL 016	3001537907	O-03-22S-31E	LOST TANK; DELAWARE, WEST	96582
LOST TANK 3 FEDERAL 018	3001537908	O-03-22S-31E	LOST TANK; DELAWARE, WEST	96582
LOST TANK 3 FEDERAL 019	3001537952	E-03-22S-31E	LOST TANK; DELAWARE, WEST	96582
LOST TANK 3 FEDERAL 020	3001537919	J-03-22S-31E	LOST TANK; DELAWARE, WEST	96582
LOST TANK 3 FEDERAL 021	3001537920	E-03-22S-31E	LOST TANK; DELAWARE, WEST	96582
LOST TANK 33 FEDERAL 004	3001529338	P-33-21S-31E	LOST TANK; DELAWARE, WEST	96582
LOST TANK 33 FEDERAL 007	3001529468	H-33-21S-31E	LOST TANK; DELAWARE, WEST	96582
LOST TANK 33 FEDERAL 008	3001529381	N-33-21S-31E	LOST TANK; DELAWARE, WEST	96582
LOST TANK 33 FEDERAL 009	3001529382	O-33-21S-31E	LOST TANK; DELAWARE, WEST	96582
LOST TANK 33 FEDERAL 010	3001529744	A-33-21S-31E	LOST TANK; DELAWARE, WEST	96582

LOST TANK 33 FEDERAL 012	3001529678	B-33-21S-31E	LOST TANK; DELAWARE, WEST	96582
LOST TANK 33 FEDERAL 015	3001529681	K-33-21S-31E	LOST TANK; DELAWARE, WEST	96582
LOST TANK 35 STATE 001	3001531361	P-35-21S-31E	LOST TANK; DELAWARE	40299
LOST TANK 35 STATE 002	3001532354	O-35-21S-31E	LOST TANK; DELAWARE	40299
LOST TANK 35 STATE 003	3001531608	N-35-21S-31E	LOST TANK; DELAWARE	40299
LOST TANK 35 STATE 004	3001531275	M-35-21S-31E	LOST TANK; DELAWARE	40299
LOST TANK 35 STATE 007	3001531640	K-35-21S-31E	LOST TANK; DELAWARE	40299
LOST TANK 35 STATE 008	3001531641	L-35-21S-31E	LOST TANK; DELAWARE	40299
LOST TANK 35 STATE 009	3001532511	H-35-21S-31E	LOST TANK; DELAWARE	40299
LOST TANK 35 STATE 010	3001532512	G-35-21S-31E	LOST TANK; DELAWARE	40299
LOST TANK 35 STATE 011	3001532240	F-35-21S-31E	LOST TANK; DELAWARE	40299
LOST TANK 35 STATE 012	3001531851	N-35-21S-31E	LOST TANK; DELAWARE	40299
LOST TANK 35 STATE 013	3001533445	A-35-21S-31E	LOST TANK; DELAWARE	40299
LOST TANK 35 STATE 014	3001533434	B-35-21S-31E	LOST TANK; DELAWARE	40299
LOST TANK 35 STATE 016	3001531926	D-35-21S-31E	LOST TANK; DELAWARE	40299
MILLS 19 001	3002535918	E-19-22S-32E	LIVINGSTON RIDGE; DELAWARE, EAST	39366
PROXIMITY 30 FEDERAL 3	3002537184	F-30-22S-32E	LIVINGSTON RIDGE; DELAWARE, EAST	39366

REMOVED - APD Canceled

DR PI FEDERAL UNIT 18-7 023H	30-025-48158	M-18-22S-32E	BILBREY BASIN;BONE SPRING	5695

of signed C-145 once sale to OXY is complete

Lost Tank Gas Commingle BLM Notification Confirmation

USPS Tracking®

Tracking / FAQs >

Track Packages Anytime, Anywhere

Get the free Informed Delivery® feature to receive automated notifications on your packages

Learn More

Remove ✕

Tracking Number:

9414811898765479192861

Copy Add to Informed Delivery

Latest Update

Your item was delivered to an individual at the address at 11:51 am on September 12, 2025 in CARLSBAD, NM 88220.

Get More Out of USPS Tracking:

USPS Tracking Plus®

Delivered

Delivered, Left with Individual

CARLSBAD, NM 88220
September 12, 2025, 11:51 am

See All Tracking History

What Do USPS Tracking Statuses Mean?

From: Musallam, Sandra C
To: Clelland, Sarah, EMNRD
Cc: McClure, Dean, EMNRD; Leung, Steven A
Subject: [EXTERNAL] Re: Supplemental Documents Action ID 508678 Lost Tank Area Gas Commingle
Date: Thursday, September 25, 2025 12:58:32 PM
Attachments: image.png

CAUTION: This email originated outside of our organization. Exercise caution prior to clicking on links or opening attachments.

Hello Sarah,
Also please note that the following wells are being removed from PLC 844F. These wells are listed in the spreadsheet as being removed.

REMOVED - APD Canceled				
DR PI FEDERAL UNIT 18-7 023H	30-025-48158	M-18-22S-32E	BILBREY BASIN;BONE SPRING	5695
DR PI FEDERAL UNIT 18-7 026H	30-025-47868	P-18-22S-32E	BILBREY BASIN;BONE SPRING	5695
DR PI FEDERAL UNIT 18-7 73H	30-025-48164	P-18-22S-32E	BILBREY BASIN;BONE SPRING	5695
DR PI FEDERAL UNIT 18-7 74H	30-025-48165	P-18-22S-32E	BILBREY BASIN;BONE SPRING	5695
LOST TANK 30_19 FEDERAL COM 02H	30-025-47540	C-19-22S-32E	BILBREY BASIN;BONE SPRING, SOUTH	97366
LOST TANK 30_19 FEDERAL COM 12H	30-025-47541	C-19-22S-32E	BILBREY BASIN;BONE SPRING, SOUTH	97366
LOST TANK 30_19 FEDERAL COM 72H	30-025-47946	D-19-22S-32E	BILBREY BASIN;BONE SPRING, SOUTH	97366
LOST TANK 30_19 FEDERAL COM 42H	30-025-48169	C-19-22S-32E	WC-025 G-09 S223219D;WOLFCAMP	98296
REMOVED - PLUGGED				
FEDERAL 12 007	30-015-26918	F-12-22S-31E	LIVINGSTON RIDGE; DELAWARE	39360
LOST TANK 3 FEDERAL 022	30-015-37921	E-03-22S-31E	LOST TANK; DELAWARE, WEST	96582
LOST TANK 3 FEDERAL 024	30-015-37922	P-03-22S-31E	LOST TANK; DELAWARE, WEST	96582
LOST TANK 4 FEDERAL 009	30-015-37953	G-04-22S-31E	LOST TANK; DELAWARE, WEST	96582
LOST TANK 4 FEDERAL 014	30-015-37893	I-04-22S-31E	LOST TANK; DELAWARE, WEST	96582
LOST TANK 35 STATE 006	30-015-32352	J-35-21S-31E	LOST TANK; DELAWARE	40299
DR PI FEDERAL UNIT 17_8 313H	30-025-48956	O-17-22S-32E	BILBREY BASIN;BONE SPRING, SOUTH	97366

Thank you,
Sandra Musallam

Regulatory Engineer
713-366-5106 (office)
713-504-8577 (cell)

From: Musallam, Sandra C <Sandra_Musallam@oxy.com>
Sent: Wednesday, September 24, 2025 5:11 PM
To: Clelland, Sarah, EMNRD <sarah.clelland@emnrd.nm.gov>
Cc: McClure, Dean, EMNRD <dean.mcclure@emnrd.nm.gov>; Leung, Steven A <Steven_Leung@oxy.com>
Subject: Supplemental Documents Action ID 508678 Lost Tank Area Gas Commingle

Hello Sarah,
Attached are the supplemental documents for Action ID 508678 Lost Tank Area Gas Commingle.

1). Spreadsheet with well name, API, surface location, pool and pool code
2). CONFIDENTIAL economic justification
3). BLM notification confirmation

To be submitted:
4). SLO application will be mailed next week after filing fee check is processed internally. I will send you that confirmation of delivery next week.

Thank you!
Sandra Musallam

Regulatory Engineer
713-366-5106 (office)
713-504-8577 (cell)

From: Musallam, Sandra C
To: Clelland, Sarah, EMNRD
Subject: Re: [EXTERNAL] Action ID 508678 PLC-844-G
Date: Tuesday, September 30, 2025 8:59:22 AM

Hi Sarah,
Yes - please use the new API for 235H.

Thank you!
Sandra Musallam

Regulatory Engineer
713-366-5106 (office)
713-504-8577 (cell)

From: Clelland, Sarah, EMNRD <Sarah.Clelland@emnrd.nm.gov>
Sent: Tuesday, September 30, 2025 9:56 AM
To: Musallam, Sandra C <Sandra_Musallam@oxy.com>
Subject: RE: [EXTERNAL] Action ID 508678 PLC-844-G

WARNING - This message is from an EXTERNAL SENDER - be CAUTIOUS, particularly with links and attachments.

Hi Sandra,

Same issue with the Gas Only application. I assume we are using the same new well?

Thanks,
Sarah Clelland

Petroleum Specialist
State of New Mexico
Energy, Minerals, and Natural Resources Department
Oil Conservation Division
Cell: (505) 537-0627
Sarah.Clelland@emnrd.nm.gov

From: Musallam, Sandra C <Sandra_Musallam@oxy.com>
Sent: Monday, September 29, 2025 4:55 PM
To: Clelland, Sarah, EMNRD <Sarah.Clelland@emnrd.nm.gov>
Subject: Re: [EXTERNAL] Action ID 508677 PLC-929-B

Hello Sarah,
Apologies - I see where a sundry was filed with OCD on 9/26/25 for Olive Won Unit 235Y (name

change of 30-015-56521) for a skid over and replacement well. 235Y encountered problems during drilling and will be plugged.

The replacement well is Olive Won 235H (30-015-57294) in pool WC-015 G-08 S233102C; Wolfcamp (98123), which is the same pool as the to-be plugged well 235Y 30-015-56521. The new BLM-approved APD for replacement well 235H 30-015-57294 was filed with the 09/26/25 OCD sundry for 235Y. Attached is the new C-102 with that sundry for replacement well 235H (30-015-57294).

Would it be possible to just replace old API number of 30-015-56521 with redrill 235H API of 30-015-57294 for the commingle permit submittal? HSU and pool are identical for to-be plugged well and the planned redrill.

Thank you!
Sandra Musallam
Regulatory Engineer
713-366-5106 (office)
713-504-8577 (cell)

From: Clelland, Sarah, EMNRD <Sarah.Clelland@emnrd.nm.gov>
Sent: Monday, September 29, 2025 4:16 PM
To: Musallam, Sandra C <sandra_musallam@oxy.com>
Subject: [EXTERNAL] Action ID 508677 PLC-929-B

WARNING - This message is from an EXTERNAL SENDER - be CAUTIOUS, particularly with links and attachments.

To whom it may concern (c/o Sandra Musallam for Oxy USA Inc),

The Division is reviewing the following application:

Action ID	**508677**
Admin No.	PLC-929-B
Applicant	Oxy USA Inc
Title	Lost Tank 25 CPF (Oil Only)
Sub. Date	09/24/2025

Please provide the following additional supplemental documents:

-

Please provide additional information regarding the following:

- Please verify API for Olive Won Unit #235H. Application shows API as 30-015-56521 but that shows as a Dry Hole. Please advise how Oxy would like to proceed.

Additional notes:

-

All additional supplemental documents and information may be provided via email and should be done by replying to this email. The produced email chain will be uploaded to the file for this application.

Please note that failure to take steps to address each of the requests made in this email within 10 business days of receipt of this email may result in the Division rejecting the application requiring the submittal of a new application by the applicant once it is prepared to address each of the topics raised.

COMMENT

Approval from Division is required prior to conducting work which modifies the well design.

Please contact the Environmental Bureau at OCD.Enviro@emnrd.nm.gov for instructions regarding the submittal process for applications of this type.

Thanks,

Sarah Clelland

Petroleum Specialist
State of New Mexico
Energy, Minerals, and Natural Resources Department
Oil Conservation Division
Cell: (505) 537-0627
Sarah.Clelland@emnrd.nm.gov

STATE OF NEW MEXICO
ENERGY, MINERALS AND NATURAL RESOURCES DEPARTMENT
OIL CONSERVATION DIVISION

APPLICATION FOR SURFACE COMMINGLING
SUBMITTED BY OXY USA, INC **ORDER NO. PLC-844-G**

ORDER

The Director of the New Mexico Oil Conservation Division ("OCD"), having considered the application and the recommendation of the OCD Engineering Bureau, issues the following Order.

FINDINGS OF FACT

1. Oxy USA, Inc ("Applicant") submitted a complete application to surface commingle the gas production from the pools, leases, and wells as described in Exhibit A ("Application").
2. Applicant proposed a method to allocate the gas production to the pools, leases, and wells to be commingled.
3. Applicant intends to segregate the gas production from each lease and from each pool within that lease as identified in Exhibit B from the gas production from all other pools and leases prior to measuring the production from each pool and lease with an allocation meter.
4. Applicant stated that it intends to keep the gas production from one or more group(s) of wells identified in Exhibit C segregated from the gas production from all other wells prior to measuring that production with an allocation meter.
5. Applicant provided notice of the Application to all persons owning an interest in the gas production to be commingled, including the owners of royalty and overriding royalty interests, regardless of whether they have a right or option to take their interests in kind, and those persons either submitted a written waiver or did not file an objection to the Application.
6. Applicant provided notice of the Application to the Bureau of Land Management ("BLM") or New Mexico State Land Office ("NMSLO"), as applicable.
7. Applicant certified the commingling of gas production from the pools, leases, and wells will not in reasonable probability reduce the value of the gas production to less than if it had remained segregated.
8. Applicant in the notice for the Application stated that it sought authorization to prospectively include additional pools, leases, and wells in accordance with 19.15.12.10 C.(4)(g) NMAC.
9. Applicant stated that it sought authorization to surface commingle and off-lease measure, as applicable, gas production from wells which have not yet been approved to be drilled, but will produce from a pool and lease as described in Exhibit A.

10. Applicant is seeking pre-approval to commingle gas production from the Jacque AGJ State No. 3 (API No. 30-015-30635) which is currently operated by EOG Resources, Inc.

11. Applicant submitted or intends to submit one or more application(s) to the BLM or NMSLO, as applicable, to form or revise a participating area ("PA") and has identified the acreage of each lease within each spacing unit ("PA Pooled Area") to be included in the application(s), as described in Exhibit A.

12. This Order is associated with Order CTB-1046, CTB-1075, CTB-1129, PC-1273, PC-1404, PLC-657-B, PLC-834, PLC-878-A, PLC-929-A, PLC-929-B, PLC-922, PLC-930, PLC-932 and PLC-937 which authorizes in-full or in-part the commingling of Oil production from the pools, leases, and wells as described in Exhibit A.

CONCLUSIONS OF LAW

13. OCD has jurisdiction to issue this Order pursuant to the Oil and Gas Act, NMSA 1978, §§ 70-2-6, 70-2-11, 70-2-12, 70-2-16, and 70-2-17, 19.15.12. NMAC, and 19.15.23. NMAC.

14. Applicant satisfied the notice requirements for the Application in accordance with 19.15.12.10 A.(2) NMAC, 19.15.12.10 C.(4)(c) NMAC, and 19.15.12.10 C.(4)(e) NMAC, as applicable.

15. Applicant satisfied the notice requirements for the Application in accordance with 19.15.23.9 A.(5) NMAC and 19.15.23.9 A.(6) NMAC, as applicable.

16. Applicant's proposed method of allocation, as modified herein, complies with 19.15.12.10 B.(1) NMAC or 19.15.12.10 C.(1) NMAC, as applicable.

17. Commingling of gas production from state, federal, or tribal leases shall not commence until approved by the BLM or NMSLO, as applicable, in accordance with 19.15.12.10 B.(3) NMAC and 19.15.12.10 C.(4)(h) NMAC.

18. Applicant satisfied the notice requirements for the subsequent addition of pools, leases, and wells in the notice for the Application, in accordance with 19.15.12.10 C.(4)(g) NMAC. Subsequent additions of pools, leases, and wells within Applicant's defined parameters, as modified herein, will not, in reasonable probability, reduce the commingled production's value or otherwise adversely affect the interest owners in the production to be added.

19. By granting the Application with the conditions specified below, this Order prevents waste and protects correlative rights, public health, and the environment.

ORDER

1. Applicant is authorized to surface commingle gas production from the pools, leases, and wells as described in Exhibit A provided Applicant shall not commingle gas production from the Jacque AGJ State No. 3 (API No. 30-015-30635) until it is the operator of record.

   Applicant is authorized to store and measure gas production off-lease from the pools, leases, and wells as described in Exhibit A at a central tank battery or gas title transfer meter

described in Exhibit A provided Applicant shall not store or measure gas production off-lease from the Jacque AGJ State No. 3 (API No. 30-015-30635) until it is the operator of record.

Applicant is authorized to surface commingle gas production from wells not included in Exhibit A but that produce from a pool and lease as described in Exhibit A.

Applicant is authorized to store and measure gas production off-lease from wells not included in Exhibit A but that produce from a pool and lease as described in Exhibit A at a central tank battery or gas title transfer meter described in Exhibit A.

2. This Order supersedes Order PLC-844-F.

3. No later than sixty (60) days after the BLM or NMSLO, as applicable, approves Applicant's paying well determination for a well, Applicant shall submit to the BLM or NMSLO an application to form or revise a PA that includes the PA Pooled Area as defined in Applicant's Form C-102 ("PA Application"). If Applicant fails to submit the PA Application, this Order shall terminate on the following day. No later than sixty (60) days after the BLM or NMSLO approves or denies the PA Application, Applicant shall submit a Form C-103 to OCD with a copy of the decision. If Applicant withdraws or the BLM or NMSLO denies the PA Application, this Order shall terminate on the date of such action. If the BLM or NMSLO approves but modifies the PA Application, Applicant shall comply with the approved PA, and no later than sixty (60) days after such decision, Applicant shall submit a new surface commingling application to OCD to conform this Order with the approved PA if the formation or dedicated lands are modified or if a modification is made that will affect this Order. If Applicant fails to submit the new surface commingling application or OCD denies the new surface commingling application, this Order shall terminate on the date of such action.

   Applicant shall allocate the gas production to each lease within a PA Pooled Area in proportion to the acreage that each lease bears to the entire acreage of the PA Pooled Area until the PA Pooled Area is included in a PA. After a PA Pooled Area is included in a PA, the gas production from the PA Pooled Area shall be allocated as required by the BLM's or NMSLO's, as applicable, approval of the PA, including any production that had been allocated previously in accordance with this Order.

4. The allocation of gas production to each pool and lease identified in Exhibit B shall be determined by separating and metering the production from each pool and lease as described by Group ID in Exhibit B prior to commingling that production with production from any other pool and lease.

   Each well identified in Exhibit B shall be exempt from the well test allocation requirements of this Order.

5. The allocation of gas production to wells not included in Exhibit A but that produce from a pool and lease as described in Exhibit A shall be determined in the same manner as to wells identified in Exhibit A that produce from that pool and lease, provided that if more than one

allocation method is being used or if there are no wells identified in Exhibit A that produce from the pool and lease, then allocation of gas production to each well not included in Exhibit A shall be determined by OCD prior to commingling production from it with the production from another well.

6. The allocation of gas production to each group of wells identified in Exhibit C shall be determined by separating and metering the production from each group as described by Train in Exhibit C prior to commingling that production with production from any other well.

7. The allocation of gas production shall be based on the production life of each well as measured for three periods: (a) the initial production period shall be measured from the first production until the earlier of either the peak production rate or thirty (30) days after the first production; (b) the plateau period shall be measured from the end of the initial production period to the peak decline rate; and (c) the decline period shall be measured from the end of the plateau period until the well is plugged and abandoned.

   During the initial production period, the gas production for each well identified in Exhibit A shall be allocated using a production curve calculated from a minimum of ten (10) well tests per month, except that any day in which a well test cannot achieve an accurate result due to a temporary change in gas production shall not be included in the computation of time determining the well test schedule. The production curve shall be calculated by interpolating daily production for each day using the known daily production obtained by well tests and shall use a method of interpolation that is at minimum as accurate as maintaining a constant rate of change for each day's production between the known daily production values.

   During the plateau period, the gas production for each well identified in Exhibit A shall be allocated using a minimum of three (3) well tests per month.

   During the decline period, the gas production for each well identified in Exhibit A shall be allocated as follows: (a) a minimum of three (3) well tests per month when the decline rate is greater than twenty-two percent (22%) per month; (b) a minimum of two (2) well tests per month when the decline rate is between twenty-two percent (22%) and ten percent (10%) per month; and (c) a minimum of one (1) well test per month when the decline rate is less than ten percent (10%) per month.

   Upon OCD's request, Applicant shall submit a Form C-103 to the OCD Engineering Bureau that contains the decline rate curve and other relevant information demonstrating the production life of a well.

   Applicant shall conduct a well test by separating and metering the gas production from that well for either (a) a minimum of twenty-four (24) consecutive hours; or (b) a combination of nonconsecutive periods that meet the following conditions: (i) each period shall be a minimum of six (6) hours; and (ii) the total duration of the nonconsecutive periods shall be a minimum of eighteen (18) hours.

   The well test requirements of this Order shall be suspended for any well shut-in for a period that continues for more than fifteen (15) days until the well commences production.

8. Applicant shall measure and market the commingled gas at a well pad, central delivery point, central tank battery, or gas title transfer meter described in Exhibit A in accordance with this Order and 19.15.19.9. NMAC, provided however that if the gas is vented or flared, and regardless of the reason or authorization pursuant to 19.15.28.8 B. NMAC for such venting or flaring, Applicant shall measure or estimate the gas in accordance with 19.15.28.8 E. NMAC.

9. Applicant shall calibrate the meters used to measure or allocate gas production in accordance with 19.15.12.10 C.(2) NMAC.

10. If the commingling of gas production from any pool, lease, or well reduces the value of the commingled gas production to less than if it had remained segregated, no later than sixty (60) days after the decrease in value has occurred Applicant shall submit a new surface commingling application to OCD to amend this Order to remove the pool, lease, or well whose gas production caused the decrease in value. If Applicant fails to submit a new application, this Order shall terminate on the following day, and if OCD denies the application, this Order shall terminate on the date of such action.

11. Applicant may submit an application to amend this Order to add pools, leases, and subsequently drilled wells with spacing units adjacent to or within the tracts commingled by this Order by submitting a Form C-107-B in accordance with 19.15.12.10 C.(4)(g) NMAC, provided the pools, leases, and subsequently drilled wells are within the identified parameters included in the Application.

12. If a well is not included in Exhibit A but produces from a pool and lease as described in Exhibit A, then Applicant shall submit Forms C-102 and C-103 to the OCD Engineering Bureau after the well has been approved to be drilled and prior to off-lease measuring or commingling oil or gas production from it with the production from another well. The Form C-103 shall reference this Order and identify the well, proposed method to determine the allocation of gas production to it, and the location(s) that commingling of its production will occur.

13. Applicant shall submit Form C-103 to the OCD Engineering Bureau after it is the operator of record and prior to off-lease measurement or commingling oil or gas production from the Jacque AGJ State No. 3 (API No. 30-015-30635). The Form C-103 shall reference this Order, identify the well, and confirm that Applicant is the operator of record for the well.

14. Applicant shall not commence commingling oil or gas production from state, federal, or tribal leases until approved by the BLM or NMSLO, as applicable.

15. If OCD determines that Applicant has failed to comply with any provision of this Order, OCD may take any action authorized by the Oil and Gas Act or the New Mexico Administrative Code (NMAC).

16. OCD retains jurisdiction of this matter and reserves the right to modify or revoke this Order as it deems necessary.

STATE OF NEW MEXICO
OIL CONSERVATION DIVISION

Albert Chang

ALBERT C. S. CHANG
DIRECTOR

DATE: 10/3/2025

State of New Mexico
Energy, Minerals and Natural Resources Department

Exhibit A

Order: PLC-844-G
Operator: Oxy USA, Inc. (16696)
Central Tank Battery: Federal 23 1 Central Tank Battery (GAS ONLY)
Central Tank Battery Location: UL P, Section 23, Township 22 South, Range 31 East
Central Tank Battery: Federal 23 11 Battery
Central Tank Battery Location: UL D, Section 26, Township 22 South, Range 31 East
Central Tank Battery: Federal 26 Battery
Central Tank Battery Location: UL I P, Section 23, Township 22 South, Range 31 East
Central Tank Battery: Federal 26 1 Central Tank Battery
Central Tank Battery Location: UL A, Section 26, Township 22 South, Range 31 East
Central Tank Battery: Cabin Lake 31 Federal 6 Battery
Central Tank Battery Location: UL M, Section 31, Township 21 South, Range 32 East
Central Tank Battery: Federal 12 04 Battery
Central Tank Battery Location: UL E, Section 12, Township 22 South, Range 31 East
Central Tank Battery: Federal 1 Battery
Central Tank Battery Location: UL K, Section 1, Township 22 South, Range 31 East
Central Tank Battery: Federal 12 01 Battery
Central Tank Battery Location: UL M, Section 12, Township 22 South, Range 31 East
Central Tank Battery: Federal 12 14H Battery
Central Tank Battery Location: UL P, Section 12, Township 22 South, Range 31 East
Central Tank Battery: Federal Neff 25 Battery
Central Tank Battery Location: UL C, Section 25, Township 22 South, Range 31 East
Central Tank Battery: Getty 24 Federal 011 Battery
Central Tank Battery Location: UL I, Section 24, Township 22 South, Range 31 East
Central Tank Battery: Livingston 19 Battery
Central Tank Battery Location: UL D, Section 19, Township 22 South, Range 32 East
Central Tank Battery: Lost Tank 3 Federal 1 Battery
Central Tank Battery Location: UL D, Section 3, Township 22 South, Range 31 East
Central Tank Battery: Lost Tank 3 Federal 5 Battery
Central Tank Battery Location: UL H, Section 3, Township 22 South, Range 31 East
Central Tank Battery: Lost Tank 4 Federal 1 Battery
Central Tank Battery Location: UL C, Section 4, Township 22 South, Range 31 East
Central Tank Battery: Lost Tank 33 Federal 4 Battery
Central Tank Battery Location: UL P, Section 33, Township 21 South, Range 31 East
Central Tank Battery: Lost Tank 35 State 4 Battery
Central Tank Battery Location: UL M, Section 35, Township 21 South, Range 31 East
Central Tank Battery: Mills 19 01 Battery
Central Tank Battery Location: UL E, Section 19, Township 22 South, Range 32 East
Central Tank Battery: Proximity 30 3 Battery
Central Tank Battery Location: UL F, Section 30, Township 22 South, Range 32 East
Central Tank Battery: State 2 3 Battery
Central Tank Battery Location: UL I, Section 2, Township 22 South, Range 31 East
Central Tank Battery: Lost Tank 30 19 Battery
Central Tank Battery Location: UL D, Section 19, Township 22 South, Range 32 East

Central Tank Battery: Lost Tank 18 Central Processing Facility
Central Tank Battery Location: UL M, Section 18, Township 22 South, Range 32 East
Central Tank Battery: Lost Tank 25 Central Processing Facility
Central Tank Battery Location: UL K, Section 25, Township 22 South, Range 31 East
Central Tank Battery: Lost Tank 18 Central Processing Facility Train 3
Central Tank Battery Location: UL M, Section 18, Township 22 South, Range 32 East
Central Tank Battery: Loper 34 State Battery
Central Tank Battery Location: UL E, Section 34, Township 21 South, Range 31 East
Central Tank Battery: Lost Tank 5 Central Processing Facility
Central Tank Battery Location: UL F, Section 5, Township 22 South, Range 32 East
Gas Title Transfer Meter Location: UL C, Section 1, Township 22 South, Range 31 East
Gas Title Transfer Meter Location: UL I, Section 13, Township 22 South, Range 31 East
Gas Title Transfer Meter Location: UL F, Section 5, Township 22 South, Range 32 East
Gas Title Transfer Meter Location: UL I, Section 13, Township 22 South, Range 31 East
Gas Title Transfer Meter Location: UL F, Section 5, Township 22 South, Range 32 East

Pools

Pool Name	Pool Code
BILBREY BASIN; BONE SPRING	5695
LIVINGSTON RIDGE; BONE SPRING	39350
LIVINGSTON RIDGE; DELAWARE	39360
LIVINGSTON RIDGE; DELAWARE, EAST	39366
LOST TANK; DELAWARE	40299
LOST TANK; DELAWARE, WEST	96582
BILBREY BASIN; BONE SPRING, SOUTH	97366
LOST TANK; WOLFCAMP	97573
WC-015 G-07 S223112P; BONE SPRING	98034
WC-015 G-08 S233102C; WOLFCAMP	98123
WC-025 G-09 S233216K; UPR WOLFCAMP	98166
WC-025 G-09 S223219D; WOLFCAMP	98296
WC-025 G-09 S213232A; UPR WOLFCAMP	98313
WC 22S31E13;WOLFCAMP	98351

Leases as defined in 19.15.12.7(C) NMAC

Lease	UL or Q/Q	S-T-R
NMNM 105557206 (062589)	All	23-22S-31E
NMNM 105416455 (062590)	All	26-22S-31E
CA Delaware NMNM 105380712 (132217)	S2S2	31-21S-32E
NMNM 105450395 (012845)	S2	1-22S-31E
NMNM 105464093 (025365)	All	25-22S-31E
NMNM 105700127 (025876)	All	24-22S-31E
NMNM 105731097 (090587)	L M P	18-22S-32E
	C D F L M	19-22S-32E
NMNM 105445222 (0417696)	All	3-22S-31E
	All minus D	4-22S-31E
NMNM 105445222 (0417696) [Lost Tank 4 Federal #8]	H	4-22S-31E

NMNM 105320836 (417506)	A B C H	10-22S-31E
	D	11-22S-31E
NMNM 105444758 (096231)	All	33-21S-31E
VO 3604 0002	All	35-21S-31E
Fee A	E	19-22S-32E
NMNM 105478656 (106915)	W2	30-22S-32E
LH 1523 0001	SE4	2-22S-31E
CA Wolfcamp NMNM 105693341 (139009)	W2W2	19-22S-32E
	W2W2	30-22S-32E
CA Bone Spring NMNM 10572844 (140586)	W2W2	19-22S-32E
	W2W2	30-22S-32E
NMNM 105312805 (029233)	W2, SE4	12-22S-31E
	All	13-22S-31E
PROPOSED CA Wolfcamp NMNM 105810902	E2	12-22S-31E
	E2	13-22S-31E
PROPOSED CA Bone Spring BLM I	W2E2	12-22S-31E
	W2E2	13-22S-31E
PROPOSED CA Bone Spring BLM J	E2E2	12-22S-31E
	E2E2	13-22S-31E
PROPOSED PA Bone Spring Dr Pi Unit H	E2	7-22S-32E
	E2	18-22S-32E
PA Bone Spring Olive Won Unit NMNM 106725931 Unit "A"	ALL	24-22S-31E
	ALL	25-22S-31E
	S2	26-22S-31E
	ALL	35-22S-31E
PA Wolfcamp Olive Won Unit NMNM 106725933 Unit "A"	ALL	24-22S-31E
	ALL	25-22S-31E
	S2	26-22S-31E
	ALL	35-22S-31E
PROPOSED PA Wolfcamp Olive Won Unit B	ALL	23-22S-31E
	ALL	26-22S-31E
PROPOSED PA Bone Spring Olive Won Unit B	ALL	23-22S-31E
	ALL	26-22S-31E
BLM Lease NMNM 105413455 (062590)	ALL	26-22S-31E
BLM Lease NMNM 105557206 (062589)	ALL	23-22S-31E
PROPOSED CA Bone Spring NMNM 106368131	W2	19-22S-32E
	W2	30-22S-32E
PROPOSED CA Wolfcamp NMNM 106368122	W2	19-22S-32E
	W2	30-22S-32E
B0 6869 0047	E	34-21S-31E
V0 4100 0001	N	34-21S-31E
CA Wolfcamp NMNM 106307077	W2	19-21S-32E
	W2	30-21S-32E
	W2	31-21S-32E
PROPOSED CA Wolfcamp NMNM 106317773	E2	19-21S-32E
	E2	30-21S-32E
	E2	31-21S-32E
	W2W2	19-21S-32E

PROPOSED CA Bone Spring NMNM C	W2W2	30-21S-32E
	W2W2	31-21S-32E
PROPOSED CA Bone Spring NMNM D	E2W2	19-21S-32E
	E2W2	30-21S-32E
	E2W2	31-21S-32E
PROPOSED CA Bone Spring NMNM E	W2E2	19-21S-32E
	W2E2	30-21S-32E
	W2E2	31-21S-32E
PROPOSED CA Bone Spring NMNM F	E2E2	19-21S-32E
	E2E2	30-21S-32E
	E2E2	31-21S-32E
PROPOSED CA Bone Spring NMNM 106320513	All	4-22S-32E
	All	9-22S-32E
PROPOSED CA Wolfcamp NMNM 106320515	All	4-22S-32E
	All	9-22S-32E
PA Bone Spring Dr Pi Unit NMNM 105825907	All	7-22S-32E
	All	8-22S-32E
	All	17-22S-32E
	All	18-22S-32E
PA Wolfcamp Dr Pi Unit NMNM 105825906	All	7-22S-32E
	All	8-22S-32E
	All	17-22S-32E
	All	18-22S-32E

Wells

Well API	Well Name	UL or Q/Q	S-T-R	Pool
30-015-26377	Federal 23 #1	O P	23-22S-31E	39360
30-015-26932	Federal 23 #2	I J	23-22S-31E	39360
30-015-26400	Federal 23 #3	G H	23-22S-31E	39360
30-015-37336	Federal 23 #4	O P	23-22S-31E	39360
30-015-26681	Federal 23 #5	A B	23-22S-31E	39360
30-015-37340	Federal 23 #6	I J	23-22S-31E	39360
30-015-37334	Federal 23 #9	G H	23-22S-31E	39360
30-015-37341	Federal 23 #16	A B	23-22S-31E	39360
30-015-39436	Federal 23 #7H	E2W2	23-22S-31E	39360
30-015-39437	Federal 23 #11H	W2W2	23-22S-31E	39360
30-015-41803	Federal 23 #12H	W2W2	23-22S-31E	39360
30-015-41636	Federal 23 #13H	E2W2	23-22S-31E	39360
30-015-41573	Federal 26 12H	E2E2	26-22S-31E	39360
30-015-41600	Federal 26 13H	W2E2	26-22S-31E	39360
30-015-26866	Federal 26 #4	D	26-22S-31E	39360
30-015-26854	Federal 26 #5	B	26-22S-31E	39360
30-015-26940	Federal 26 #6	E	26-22S-31E	39360
30-015-26941	Federal 26 #7	F	26-22S-31E	39360
30-025-41088	Cabin Lake 31 Federal Com #6H	S2S2	31-21S-32E	40299
30-015-26859	Federal 12 #4	E	12-22S-31E	39360
30-015-26860	Federal 12 #5	D	12-22S-31E	39360

30-015-26942	Federal 12 #8	C	12-22S-31E	39360
30-015-26909	Federal 1 #5	M	1-22S-31E	40299
30-015-26910	Federal 1 #6	N	1-22S-31E	40299
30-015-26988	Federal 1 #7	O	1-22S-31E	40299
30-015-26780	Federal 12 #2	L	12-22S-31E	39360
30-015-26858	Federal 12 #3	N	12-22S-31E	39360
30-015-26971	Federal 12 #9	O	12-22S-31E	39360
30-015-40821	Federal 12 #14H	S2S2	12-22S-31E	98034
30-015-41031	Neff 25 Federal #5H	E2W2	25-22S-31E	39360
30-015-41459	Neff 25 Federal #9H	S2N2	25-22S-31E	39350
30-015-26639	Neff Federal #2	E	25-22S-31E	39360
30-015-31162	Getty 24 Federal #11	I	24-22S-31E	39360
30-025-36012	Livingston Ridge 18 Federal #4	M	18-22S-32E	39366
30-025-36295	Livingston Ridge 18 Federal #6	L	18-22S-32E	39366
30-025-35960	Livingston Ridge 19 Federal #1	D	19-22S-32E	39366
30-015-29638	Lost Tank 3 Federal #1	All	3-22S-31E	96582
30-015-29682	Lost Tank 3 Federal #2	All	3-22S-31E	96582
30-015-29859	Lost Tank 3 Federal #3	All	3-22S-31E	96582
30-015-30418	Lost Tank 3 Federal #4	All	3-22S-31E	96582
30-015-35354	Lost Tank 3 Federal Deep #23	E	3-22S-31E	97573
30-015-37959	Lost Tank 10 Federal #1	A B C H	10-22S-31E	96582
30-015-37960	Lost Tank 10 Federal #2	A B C H	10-22S-31E	96582
30-015-37897	Lost Tank 10 Federal #3	A B C H	10-22S-31E	96582
30-015-37961	Lost Tank 10 Federal #4	A B C H	10-22S-31E	96582
30-015-37924	Lost Tank 10 Federal #5	A B C H	10-22S-31E	96582
30-015-37962	Lost Tank 11 Federal #1	D	11-22S-31E	96582
30-015-30586	Lost Tank 3 Federal #5	All	3-22S-31E	96582
30-015-31887	Lost Tank 3 Federal #6	All	3-22S-31E	96582
30-015-32167	Lost Tank 3 Federal #7	All	3-22S-31E	96582
30-015-32168	Lost Tank 3 Federal #8	All	3-22S-31E	96582
30-015-32169	Lost Tank 3 Federal #9	All	3-22S-31E	96582
30-015-32345	Lost Tank 3 Federal #10	All	3-22S-31E	96582
30-015-32725	Lost Tank 3 Federal #11	All	3-22S-31E	96582
30-015-32726	Lost Tank 3 Federal #12	All	3-22S-31E	96582
30-015-37950	Lost Tank 3 Federal #13	All	3-22S-31E	96582
30-015-37918	Lost Tank 3 Federal #14	All	3-22S-31E	96582
30-015-37951	Lost Tank 3 Federal #15	All	3-22S-31E	96582
30-015-37907	Lost Tank 3 Federal #16	All	3-22S-31E	96582
30-015-37908	Lost Tank 3 Federal #18	All	3-22S-31E	96582
30-015-37952	Lost Tank 3 Federal #19	All	3-22S-31E	96582
30-015-37919	Lost Tank 3 Federal #20	All	3-22S-31E	96582
30-015-37920	Lost Tank 3 Federal #21	All	3-22S-31E	96582
30-015-28727	Lost Tank 4 Federal #1	C	4-22S-31E	96582
30-015-29611	Lost Tank 4 Federal #2	B	4-22S-31E	96582
30-015-29617	Lost Tank 4 Federal #3	A	4-22S-31E	96582
30-015-29732	Lost Tank 4 Federal #5	F	4-22S-31E	96582
30-015-29733	Lost Tank 4 Federal #6	G	4-22S-31E	96582
30-015-30414	Lost Tank 4 Federal #7	H	4-22S-31E	96582

30-015-37923	Lost Tank 4 Federal #8	H	4-22S-31E	96582
30-015-37954	Lost Tank 4 Federal #11	E	4-22S-31E	96582
30-015-37955	Lost Tank 4 Federal #12	L	4-22S-31E	96582
30-015-37956	Lost Tank 4 Federal #13	K	4-22S-31E	96582
30-015-37894	Lost Tank 4 Federal #15	I	4-22S-31E	96582
30-015-37957	Lost Tank 4 Federal #16	P	4-22S-31E	96582
30-015-37958	Lost Tank 4 Federal #17	O	4-22S-31E	96582
30-015-37895	Lost Tank 4 Federal #18	N	4-22S-31E	96582
30-015-37896	Lost Tank 4 Federal #19	M	4-22S-31E	96582
30-015-34918	Lost Tank 4 Federal #20	H	4-22S-31E	97573
30-015-40775	Lost Tank 4 Federal #23	F G K L M	4-22S-31E	97573
30-015-29338	Lost Tank 33 Federal #4	P	33-21S-31E	96582
30-015-29468	Lost Tank 33 Federal #7	H	33-21S-31E	96582
30-015-29381	Lost Tank 33 Federal #8	N	33-21S-31E	96582
30-015-29382	Lost Tank 33 Federal #9	O	33-21S-31E	96582
30-015-29744	Lost Tank 33 Federal #10	A	33-21S-31E	96582
30-015-29678	Lost Tank 33 Federal #12	C	33-21S-31E	96582
30-015-29681	Lost Tank 33 Federal #15	K	33-21S-31E	96582
30-015-31361	Lost Tank 35 State #1	P	35-21S-31E	40299
30-015-32354	Lost Tank 35 State #2	O	35-21S-31E	40299
30-015-31608	Lost Tank 35 State #3	N	35-21S-31E	40299
30-015-31275	Lost Tank 35 State #4	M	35-21S-31E	40299
30-015-31640	Lost Tank 35 State #7	K	35-21S-31E	40299
30-015-31641	Lost Tank 35 State #8	L	35-21S-31E	40299
30-015-32511	Lost Tank 35 State #9	H	35-21S-31E	40299
30-015-32512	Lost Tank 35 State #10	G	35-21S-31E	40299
30-015-32240	Lost Tank 35 State #11	F	35-21S-31E	40299
30-015-31851	Lost Tank 35 State #12	E	35-21S-31E	40299
30-015-33445	Lost Tank 35 State #13Q	A	35-21S-31E	40299
30-015-33434	Lost Tank 35 State #14	B	35-21S-31E	40299
30-015-31926	Lost Tank 35 State #16	D	35-21S-31E	40299
30-025-35918	Mills 19 #1	E	19-22S-32E	39366
30-025-37184	Proximity 30 Federal #3	F	30-22S-32E	39366
30-015-26894	State 2 #1	P	2-22S-31E	40299
30-015-28416	State 2 #2	O	2-22S-31E	40299
30-015-28456	State 2 #4	J	2-22S-31E	40299
30-025-46474	Lost Tank 30 19 Federal Com #1H	W2W2 W2W2	19-22S-32E 30-22S-32E	97366
30-025-45182	Lost Tank 30 19 Federal Com #31H	W2W2 W2W2	19-22S-32E 30-22S-32E	98296
30-025-49147	Dr Pi Unit #31H	W2W2 W2W2	8-22S-32E 17-22S-32E	98166
30-025-49148	Dr Pi Unit #32H	E2W2 E2W2	8-22S-32E 17-22S-32E	98166
30-025-48951	Dr Pi Unit #34H	E2 E2	8-22S-32E 17-22S-32E	98166
30-025-48952	Dr Pi Unit #35H	E2E2 E2E2	8-22S-32E 17-22S-32E	97366

30-025-49152	Dr Pi Unit #311H	W2 W2	8-22S-32E 17-22S-32E	97366

30-025-48955	Dr Pi Unit #312H	W2E2 W2E2	8-22S-32E 17-22S-32E	97366
30-025-48160	Dr Pi Unit #31H	W2W2 W2W2	7-22S-32E 18-22S-32E	98296
30-025-48024	Dr Pi Unit #32H	E2W2 E2W2	7-22S-32E 18-22S-32E	98296
30-025-48025	Dr Pi Unit #34H	E2 E2	7-22S-32E 18-22S-32E	98296
30-025-48166	Dr Pi Unit #311H	W2 W2	7-22S-32E 18-22S-32E	97366
30-025-48167	Dr Pi Unit #312H	W2E2 W2E2	7-22S-32E 18-22S-32E	97366
30-025-48168	Dr Pi Unit #313H	E2E2 E2E2	7-22S-32E 18-22S-32E	97366
30-025-48282	Dr Pi Unit #21H	W2 W2	8-22S-32E 17-22S-32E	97366
30-025-48947	Dr Pi Unit #23H	W2 W2	8-22S-32E 17-22S-32E	97366
30-025-48949	Dr Pi Unit #25H	E2 E2	8-22S-32E 17-22S-32E	97366
30-025-48950	Dr Pi Unit #26H	E2 E2	8-22S-32E 17-22S-32E	97366
30-025-47835	Dr Pi Unit #21H	W2 W2	7-22S-32E 18-22S-32E	97366
30-025-48159	Dr Pi Unit #25H	E2 E2	7-22S-32E 18-22S-32E	97366
30-025-48163	Dr Pi Unit #72H	W2 W2	7-22S-32E 18-22S-32E	97366
30-025-48162	Dr Pi Unit #71H	W2 W2	7-22S-32E 18-22S-32E	97366
30-025-47867	Dr Pi Unit #24H	E2 E2	7-22S-32E 18-22S-32E	97366
30-025-48157	Dr Pi Unit #22H	W2 W2	7-22S-32E 18-22S-32E	97366
30-025-54180	Dr Pi Unit #15H	E2E2 E2E2	7-22S-32E 18-22S-32E	97366
30-025-54176	Dr Pi Unit #3H	W2E2 W2E2	7-22S-32E 18-22S-32E	97366
30-025-54175	Dr Pi Unit #2H	W2 W2	7-22S-32E 18-22S-32E	97366
30-025-54177	Dr Pi Unit #4H	E2E2 E2E2	7-22S-32E 18-22S-32E	97366
30-025-54179	Dr Pi Unit #12H	W2 W2	7-22S-32E 18-22S-32E	97366
30-025-54209	Dr Pi Unit #1H	W2 W2	7-22S-32E 18-22S-32E	97366
30-025-54178	Dr Pi Unit #11H	W2 W2	7-22S-32E 18-22S-32E	97366

30-025-48954	Dr Pi Unit #74H	E2 E2	8-22S-32E 17-22S-32E	97366
30-025-48953	Dr Pi Unit #73H	E2 E2	8-22S-32E 17-22S-32E	97366
30-025-49151	Dr Pi Unit #72H	W2 W2	8-22S-32E 17-22S-32E	97366
30-025-49150	Dr Pi Unit #71H	W2 W2	8-22S-32E 17-22S-32E	97366
30-025-48948	Dr Pi Unit #24H	E2 E2	8-22S-32E 17-22S-32E	97366
30-025-48945	Dr Pi Unit #12H	E2 E2	8-22S-32E 17-22S-32E	97366
30-025-48944	Dr Pi Unit #11H	W2 W2	8-22S-32E 17-22S-32E	97366
30-015-47949	Top Spot 12 13 Federal Com #34H	E2 E2	12-22S-31E 13-22S-31E	98351
30-015-47887	Top Spot 12 13 Federal Com #35H	E2 E2	12-22S-31E 13-22S-31E	98351
30-015-47625	Top Spot 12 13 Federal Com #313H	E2 E2	12-22S-31E 13-22S-31E	98351
30-015-48594	Top Spot 12 13 Federal Com #1H	W2W2 W2W2	12-22S-31E 13-22S-31E	5695
30-015-48595	Top Spot 12 13 Federal Com #11H	W2W2 W2W2	12-22S-31E 13-22S-31E	5695
30-015-47771	Top Spot 12 13 Federal Com #21H	W2W2 W2W2	12-22S-31E 13-22S-31E	5695
30-015-48597	Top Spot 12 13 Federal Com #31H	W2 W2	12-22S-31E 13-22S-31E	98351
30-015-48596	Top Spot 12 13 Federal Com #32H	W2 W2	12-22S-31E 13-22S-31E	98351
30-015-47627	Top Spot 12 13 Federal Com #311H	W2 W2	12-22S-31E 13-22S-31E	98351
30-015-47626	Top Spot 12 13 Federal Com #312H	W2 W2	12-22S-31E 13-22S-31E	98351
30-015-47639	Top Spot 12 13 Federal Com #25H	W2E2 W2E2	12-22S-31E 13-22S-31E	5695
30-015-47885	Top Spot 12 13 Federal Com #23H	E2W2 E2W2	12-22S-31E 13-22S-31E	5695
30-015-47888	Top Spot 12 13 Federal Com #26H	E2E2 E2E2	12-22S-31E 13-22S-31E	5695
30-015-47889	Top Spot 12 13 Federal Com #22H	E2W2 E2W2	12-22S-31E 13-22S-31E	5695
30-015-47953	Top Spot 12 13 Federal Com #33H	E2E2 E2E2	12-22S-31E 13-22S-31E	5695
30-015-47954	Top Spot 12 13 Federal Com #24H	W2E2 W2E2	12-22S-31E 13-22S-31E	5695
30-015-54756	Olive Won Unit #136H	E2E2 E2E2	24-22S-31E 25-22S-31E	39350

30-015-54746	Olive Won Unit #131H	W2W2 W2W2	24-22S-31E 25-22S-31E	98351
30-015-54747	Olive Won Unit #132H	W2W2 W2W2	24-22S-31E 25-22S-31E	98351
30-015-56138	Olive Won Unit #101H	W2 W2	24-22S-31E 25-22S-31E	39350
30-015-56139	Olive Won Unit #102H	W2 W2	24-22S-31E 25-22S-31E	39350
30-015-56140	Olive Won Unit #103H	E2 E2	24-22S-31E 25-22S-31E	39350
30-015-56142	Olive Won Unit #104H	E2 E2	24-22S-31E 25-22S-31E	39350
30-015-54655	Olive Won Unit #105H	E2 E2	24-22S-31E 25-22S-31E	39350
30-015-54748	Olive Won Unit #133H	E2W2 E2W2	24-22S-31E 25-22S-31E	98351
30-015-54757	Olive Won Unit #137H	E2W2 E2W2	24-22S-31E 25-22S-31E	98351
30-015-54749	Olive Won Unit #134H	W2E2 W2E2	24-22S-31E 25-22S-31E	98351
30-015-54734	Olive Won Unit #174H	W2E2 W2E2	24-22S-31E 25-22S-31E	98351
30-015-54755	Olive Won Unit #135H	E2E2 E2E2	24-22S-31E 25-22S-31E	98351
30-015-55187	Olive Won Unit #33H	S2 All	26-22S-31E 35-22S-31E	98123
30-015-55179	Olive Won Unit #32H	S2 All	26-22S-31E 35-22S-31E	98123
30-015-55189	Olive Won Unit #34H	S2 All	26-22S-31E 35-22S-31E	98123
30-015-55177	Olive Won Unit #31H	S2 All	26-22S-31E 35-22S-31E	98123
30-015-55215	Olive Won Unit #35H	S2 All	26-22S-31E 35-22S-31E	98123
30-015-55180	Olive Won Unit #36H	S2 All	26-22S-31E 35-22S-31E	98123
30-015-55181	Olive Won Unit #37H	S2 All	26-22S-31E 35-22S-31E	98123
30-015-55182	Olive Won Unit #4H	S2 All	26-22S-31E 35-22S-31E	39350
30-015-55183	Olive Won Unit #71H	S2 All	26-22S-31E 35-22S-31E	39350
30-025-48464	Lost Tank 30 19 Federal Com #33H	W2 W2	19-22S-32E 30-22S-32E	98296
30-025-48691	Lost Tank 30 19 Federal Com #41H	W2 W2	19-22S-32E 30-22S-32E	98296
30-025-47543	Lost Tank 30 19 Federal Com #22H	W2 W2	19-22S-32E 30-22S-32E	97366

30-025-47941	Lost Tank 30 19 Federal Com #11H	W2 W2	19-22S-32E 30-22S-32E	97366
30-025-47942	Lost Tank 30 19 Federal Com #21H	W2 W2	19-22S-32E 30-22S-32E	97366
30-025-47944	Lost Tank 30 19 Federal Com #32H	W2 W2	19-22S-32E 30-22S-32E	97366
30-025-47945	Lost Tank 30 19 Federal Com #71H	W2 W2	19-22S-32E 30-22S-32E	97366
30-015-30635	Jacque AQJ State #3	N	34-21S-31E	96582
30-015-29988	Loper 34 State #1	E	34-21S-31E	96582
30-025-52491	Regal Lager 31 19 Federal Com #34H	E/2 E/2 E/2	19-21S-32E 30-21S-32E 31-21S-32E	98313
30-025-52492	Regal Lager 31 19 Federal Com #35H	E/2 E/2 E/2	19-21S-32E 30-21S-32E 31-21S-32E	98313
30-025-52493	Regal Lager 31 19 Federal Com #36H	E/2 E/2 E/2	19-21S-32E 30-21S-32E 31-21S-32E	98313
30-025-52488	Regal Lager 31 19 Federal Com #31H	W2 W2 W2	19-21S-32E 30-21S-32E 31-21S-32E	98313
30-025-52489	Regal Lager 31 19 Federal Com #32H	W2 W2 W2	19-21S-32E 30-21S-32E 31-21S-32E	98313
30-025-52490	Regal Lager 31 19 Federal Com #33H	W2 W2 W2	19-21S-32E 30-21S-32E 31-21S-32E	98313
30-025-52620	Regal Lager 31 19 Federal Com #71H	W2W2 W2W2 W2W2	19-21S-32E 30-21S-32E 31-21S-32E	5695
30-025-52513	Regal Lager 31 19 Federal Com #72H	E2W2 E2W2 E2W2	19-21S-32E 30-21S-32E 31-21S-32E	5695
30-025-52514	Regal Lager 31 19 Federal Com #73H	W2E2 W2E2 W2E2	19-21S-32E 30-21S-32E 31-21S-32E	5695
30-025-52515	Regal Lager 31 19 Federal Com #74H	E2E2 E2E2 E2E2	19-21S-32E 30-21S-32E 31-21S-32E	5695
30-025-52224	Gold Log 4 9 Federal Com #71H	All All	4-22S-32E 9-22S-32E	5695
30-025-52190	Gold Log 4 9 Federal Com #72H	All All	4-22S-32E 9-22S-32E	5695
30-025-52208	Gold Log 4 9 Federal Com #73H	All All	4-22S-32E 9-22S-32E	5695
30-025-52191	Gold Log 4 9 Federal Com #74H	All All	4-22S-32E 9-22S-32E	5695

30-025-53818	Gold Log 4 9 Federal Com #22H	All All	4-22S-32E 9-22S-32E	5695
30-025-53809	Gold Log 4 9 Federal Com #12H	All All	4-22S-32E 9-22S-32E	5695
30-025-53812	Gold Log 4 9 Federal Com #23H	All All	4-22S-32E 9-22S-32E	5695
30-025-53815	Gold Log 4 9 Federal Com #1H	All All	4-22S-32E 9-22S-32E	5695
30-025-53814	Gold Log 4 9 Federal Com #26H	All All	4-22S-32E 9-22S-32E	5695
30-025-53811	Gold Log 4 9 Federal Com #16H	All All	4-22S-32E 9-22S-32E	5695
30-025-53807	Gold Log 4 9 Federal Com #2H	All All	4-22S-32E 9-22S-32E	5695
30-025-53817	Gold Log 4 9 Federal Com #13H	All All	4-22S-32E 9-22S-32E	5695
30-025-53816	Gold Log 4 9 Federal Com #4H	All All	4-22S-32E 9-22S-32E	5695
30-025-53813	Gold Log 4 9 Federal Com #25H	All All	4-22S-32E 9-22S-32E	5695
30-025-53808	Gold Log 4 9 Federal Com #3H	All All	4-22S-32E 9-22S-32E	5695
30-025-52225	Gold Log 4 9 Federal Com #311H	All All	4-22S-32E 9-22S-32E	98296
30-025-52192	Gold Log 4 9 Federal Com #313H	All All	4-22S-32E 9-22S-32E	98296
30-025-52187	Gold Log 4 9 Federal Com #32H	All All	4-22S-32E 9-22S-32E	98296
30-025-52188	Gold Log 4 9 Federal Com #33H	All All	4-22S-32E 9-22S-32E	98296
30-025-52189	Gold Log 4 9 Federal Com #34H	All All	4-22S-32E 9-22S-32E	98296
30-025-52186	Gold Log 4 9 Federal Com #35H	All All	4-22S-32E 9-22S-32E	98296
30-015-56502	Olive Won Unit #231H	W2 NW4	23-22S-31E 26-22S-31E	98123
30-015-56503	Olive Won Unit #232H	W2 NW4	23-22S-31E 26-22S-31E	98123
30-015-56509	Olive Won Unit #233H	W2 NW4	23-22S-31E 26-22S-31E	98123
30-015-56510	Olive Won Unit #234H	E2 NE4	23-22S-31E 26-22S-31E	98123
30-015-57294	Olive Won Unit #235H	E2 NE4	23-22S-31E 26-22S-31E	98123
30-015-56522	Olive Won Unit #236H	E2 NE4	23-22S-31E 26-22S-31E	98123
30-015-56524	Olive Won Unit #237H	E2 NE4	23-22S-31E 26-22S-31E	98123

State of New Mexico
Energy, Minerals and Natural Resources Department

Exhibit B

Order: PLC-844-G
Operator: Oxy USA, Inc. (16696)

Pools

Pool Name	Pool Code
LIVINGSTON RIDGE; DELAWARE	39360
LIVINGSTON RIDGE; DELAWARE, EAST	39366
LOST TANK; DELAWARE	40299
LOST TANK; DELAWARE, WEST	96582
WC-015 G-07 S223112P; BONE SPRING	98034

Leases as defined in 19.15.12.7(C) NMAC

Lease	UL or Q/Q	S-T-R
CA Delaware NMNM 105380712 (132217)	S/2 S/2	31-21S-32E
NMNM 105312805 (029233)	W/2, SE/4	12-22S-31E
NMNM 105450395 (012845)	S/2	1-22S-31E
NMNM 105700127 (025876)	All	24-22S-31E
NMNM 105731097 (090587)	L M	18-22S-32E
	C D F	19-22S-32E
NMNM 105444758 (096231)	All	33-21S-31E
VO 3604 0002	All	35-21S-31E
Fee A	E	19-22S-32E
NMNM 105478656 (106915)	W/2	30-22S-32E
LH 1523 0001	SE/4	2-22S-31E

Pools within each Lease

Lease	Pool Code	Group ID
CA Delaware NMNM 105380712 (132217)	40299	AA
NMNM 105312805 (029233)	39360	BB
NMNM 105450395 (012845)	40299	CC
NMNM 105312805 (029233)	39360	DD
NMNM 105312805 (029233)	98034	EE
NMNM 105700127 (025876)	39360	FF
NMNM 105731097 (090587)	39366	GG
NMNM 105444758 (096231)	96582	JJ
VO 3604 0002	40299	KK
Fee A	39366	LL
NMNM 105478656 (106915)	39366	MM
LH 1523 0001	40299	NN

Wells

Well API	Well Name	UL or Q/Q	S-T-R	Group ID
30-025-41088	Cabin Lake 31 Federal Com #6H	S/2 S/2	31-21S-32E	AA
30-015-26859	Federal 12 #4	E	12-22S-31E	BB
30-015-26860	Federal 12 #5	D	12-22S-31E	BB
30-015-26918	Federal 12 #7	F	12-22S-31E	BB
30-015-26942	Federal 12 #8	C	12-22S-31E	BB
30-015-26909	Federal 1 #5	M	1-22S-31E	CC
30-015-26910	Federal 1 #6	N	1-22S-31E	CC
30-015-26988	Federal 1 #7	O	1-22S-31E	CC
30-015-26780	Federal 12 #2	L	12-22S-31E	DD
30-015-26858	Federal 12 #3	N	12-22S-31E	DD
30-015-26971	Federal 12 #9	O	12-22S-31E	DD
30-015-40821	Federal 12 #14H	S/2 S/2	12-22S-31E	EE
30-015-31162	Getty 24 Federal #11	I	24-22S-31E	FF
30-025-36012	Livingston Ridge 18 Federal #4	M	18-22S-32E	GG
30-025-36295	Livingston Ridge 18 Federal #6	L	18-22S-32E	GG
30-025-35960	Livingston Ridge 19 Federal #1	D	19-22S-32E	GG
30-015-29338	Lost Tank 33 Federal #4	P	33-21S-31E	JJ
30-015-29468	Lost Tank 33 Federal #7	H	33-21S-31E	JJ
30-015-29381	Lost Tank 33 Federal #8	N	33-21S-31E	JJ
30-015-29382	Lost Tank 33 Federal #9	O	33-21S-31E	JJ
30-015-29744	Lost Tank 33 Federal #10	A	33-21S-31E	JJ
30-015-29678	Lost Tank 33 Federal #12	C	33-21S-31E	JJ
30-015-29681	Lost Tank 33 Federal #15	K	33-21S-31E	JJ
30-015-31361	Lost Tank 35 State #1	P	35-21S-31E	KK
30-015-32354	Lost Tank 35 State #2	O	35-21S-31E	KK
30-015-31608	Lost Tank 35 State #3	N	35-21S-31E	KK
30-015-31275	Lost Tank 35 State #4	M	35-21S-31E	KK
30-015-32352	Lost Tank 35 State #6	J	35-21S-31E	KK
30-015-31640	Lost Tank 35 State #7	K	35-21S-31E	KK
30-015-31641	Lost Tank 35 State #8	L	35-21S-31E	KK
30-015-32511	Lost Tank 35 State #9	H	35-21S-31E	KK
30-015-32512	Lost Tank 35 State #10	G	35-21S-31E	KK
30-015-32240	Lost Tank 35 State #11	F	35-21S-31E	KK
30-015-31851	Lost Tank 35 State #12	E	35-21S-31E	KK
30-015-33445	Lost Tank 35 State #13Q	A	35-21S-31E	KK
30-015-33434	Lost Tank 35 State #14	B	35-21S-31E	KK
30-015-31926	Lost Tank 35 State #16	D	35-21S-31E	KK
30-025-35918	Mills 19 #1	E	19-22S-32E	LL
30-025-37184	Proximity 30 Federal #3	F	30-22S-32E	MM
30-015-26894	State 2 #1	P	2-22S-31E	NN
30-015-28416	State 2 #2	O	2-22S-31E	NN
30-015-28456	State 2 #4	J	2-22S-31E	NN

State of New Mexico
Energy, Minerals and Natural Resources Department

Exhibit C

Order: PLC-844-G
Operator: Oxy USA, Inc. (16696)

Wells

Well API	Well Name	UL or Q/Q	S-T-R	Train
30-015-26377	Federal 23 #1	O P	23-22S-31E	A1
30-015-26932	Federal 23 #2	I J	23-22S-31E	A1
30-015-26400	Federal 23 #3	G H	23-22S-31E	A1
30-015-37336	Federal 23 #4	O P	23-22S-31E	A1
30-015-26681	Federal 23 #5	A B	23-22S-31E	A1
30-015-37340	Federal 23 #6	I J	23-22S-31E	A1
30-015-37334	Federal 23 #9	G H	23-22S-31E	A1
30-015-37341	Federal 23 #16	A B	23-22S-31E	A1
30-015-39436	Federal 23 #7H	E/2 W/2	23-22S-31E	B1
30-015-39437	Federal 23 #11H	W/2 W/2	23-22S-31E	B1
30-015-41803	Federal 23 #12H	W/2 W/2	23-22S-31E	B1
30-015-41636	Federal 23 #13H	E/2 W/2	23-22S-31E	B1
30-015-41573	Federal 26 12H	E/2 E/2	26-22S-31E	C1
30-015-41600	Federal 26 13H	W/2 E/2	26-22S-31E	C1
30-015-26866	Federal 26 #4	D	26-22S-31E	C1
30-015-26854	Federal 26 #5	B	26-22S-31E	C1
30-015-26940	Federal 26 #6	E	26-22S-31E	C1
30-015-26941	Federal 26 #7	F	26-22S-31E	C1
30-025-41088	Cabin Lake 31 Federal Com #6H	S/2 S/2	31-21S-32E	E1
30-015-26859	Federal 12 #4	E	12-22S-31E	F1
30-015-26860	Federal 12 #5	D	12-22S-31E	F1
30-015-26942	Federal 12 #8	C	12-22S-31E	F1
30-015-26909	Federal 1 #5	M	1-22S-31E	G1
30-015-26910	Federal 1 #6	N	1-22S-31E	G1
30-015-26988	Federal 1 #7	O	1-22S-31E	G1
30-015-26780	Federal 12 #2	L	12-22S-31E	H1
30-015-26858	Federal 12 #3	N	12-22S-31E	H1
30-015-26971	Federal 12 #9	O	12-22S-31E	H1
30-015-40821	Federal 12 #14H	S/2 S/2	12-22S-31E	I1
30-015-41031	Neff 25 Federal #5H	E/2 W/2	25-22S-31E	J1
30-015-41459	Neff 25 Federal #9H	S/2 N/2	25-22S-31E	J1
30-015-26639	Neff Federal #2	E	25-22S-31E	J1
30-015-31162	Getty 24 Federal #11	I	24-22S-31E	K1
30-025-36012	Livingston Ridge 18 Federal #4	M	18-22S-32E	L1
30-025-36295	Livingston Ridge 18 Federal #6	L	18-22S-32E	L1
30-025-35960	Livingston Ridge 19 Federal #1	D	19-22S-32E	L1
30-015-29638	Lost Tank 3 Federal #1	All	3-22S-31E	M1
30-015-29682	Lost Tank 3 Federal #2	All	3-22S-31E	M1
30-015-29859	Lost Tank 3 Federal #3	All	3-22S-31E	M1

30-015-30418	Lost Tank 3 Federal #4	All	3-22S-31E	M1
30-015-35354	Lost Tank 3 Federal Deep #23	E	3-22S-31E	M1
30-015-37959	Lost Tank 10 Federal #1	A B C H	10-22S-31E	N1
30-015-37960	Lost Tank 10 Federal #2	A B C H	10-22S-31E	N1
30-015-37897	Lost Tank 10 Federal #3	A B C H	10-22S-31E	N1
30-015-37961	Lost Tank 10 Federal #4	A B C H	10-22S-31E	N1
30-015-37924	Lost Tank 10 Federal #5	A B C H	10-22S-31E	N1
30-015-37962	Lost Tank 11 Federal #1	D	11-22S-31E	N1
30-015-30586	Lost Tank 3 Federal #5	All	3-22S-31E	N1
30-015-31887	Lost Tank 3 Federal #6	All	3-22S-31E	N1
30-015-32167	Lost Tank 3 Federal #7	All	3-22S-31E	N1
30-015-32168	Lost Tank 3 Federal #8	All	3-22S-31E	N1
30-015-32169	Lost Tank 3 Federal #9	All	3-22S-31E	N1
30-015-32345	Lost Tank 3 Federal #10	All	3-22S-31E	N1
30-015-32725	Lost Tank 3 Federal #11	All	3-22S-31E	N1
30-015-32726	Lost Tank 3 Federal #12	All	3-22S-31E	N1
30-015-37950	Lost Tank 3 Federal #13	All	3-22S-31E	N1
30-015-37918	Lost Tank 3 Federal #14	All	3-22S-31E	N1
30-015-37951	Lost Tank 3 Federal #15	All	3-22S-31E	N1
30-015-37907	Lost Tank 3 Federal #16	All	3-22S-31E	N1
30-015-37908	Lost Tank 3 Federal #18	All	3-22S-31E	N1
30-015-37952	Lost Tank 3 Federal #19	All	3-22S-31E	N1
30-015-37919	Lost Tank 3 Federal #20	All	3-22S-31E	N1
30-015-37920	Lost Tank 3 Federal #21	All	3-22S-31E	N1
30-015-28727	Lost Tank 4 Federal #1	All	4-22S-31E	O1
30-015-29611	Lost Tank 4 Federal #2	All	4-22S-31E	O1
30-015-29617	Lost Tank 4 Federal #3	All	4-22S-31E	O1
30-015-29732	Lost Tank 4 Federal #5	All	4-22S-31E	O1
30-015-29733	Lost Tank 4 Federal #6	All	4-22S-31E	O1
30-015-30414	Lost Tank 4 Federal #7	All	4-22S-31E	O1
30-015-37923	Lost Tank 4 Federal #8	All	4-22S-31E	O1
30-015-37954	Lost Tank 4 Federal #11	All	4-22S-31E	O1
30-015-37955	Lost Tank 4 Federal #12	All	4-22S-31E	O1
30-015-37956	Lost Tank 4 Federal #13	All	4-22S-31E	O1
30-015-37894	Lost Tank 4 Federal #15	All	4-22S-31E	O1
30-015-37957	Lost Tank 4 Federal #16	All	4-22S-31E	O1
30-015-37958	Lost Tank 4 Federal #17	All	4-22S-31E	O1
30-015-37895	Lost Tank 4 Federal #18	All	4-22S-31E	O1
30-015-37896	Lost Tank 4 Federal #19	All	4-22S-31E	O1
30-015-34918	Lost Tank 4 Federal #20	H	4-22S-31E	O1
30-015-40775	Lost Tank 4 Federal #23	F G K L M	4-22S-31E	O1
30-015-29338	Lost Tank 33 Federal #4	P	33-21S-31E	P1
30-015-29468	Lost Tank 33 Federal #7	H	33-21S-31E	P1
30-015-29381	Lost Tank 33 Federal #8	N	33-21S-31E	P1
30-015-29382	Lost Tank 33 Federal #9	O	33-21S-31E	P1
30-015-29744	Lost Tank 33 Federal #10	A	33-21S-31E	P1
30-015-29678	Lost Tank 33 Federal #12	C	33-21S-31E	P1
30-015-29681	Lost Tank 33 Federal #15	K	33-21S-31E	P1

30-015-31361	Lost Tank 35 State #1	P	35-21S-31E	Q1
30-015-32354	Lost Tank 35 State #2	O	35-21S-31E	Q1
30-015-31608	Lost Tank 35 State #3	N	35-21S-31E	Q1
30-015-31275	Lost Tank 35 State #4	M	35-21S-31E	Q1
30-015-31640	Lost Tank 35 State #7	K	35-21S-31E	Q1
30-015-31641	Lost Tank 35 State #8	L	35-21S-31E	Q1
30-015-32511	Lost Tank 35 State #9	H	35-21S-31E	Q1
30-015-32512	Lost Tank 35 State #10	G	35-21S-31E	Q1
30-015-32240	Lost Tank 35 State #11	F	35-21S-31E	Q1
30-015-31851	Lost Tank 35 State #12	E	35-21S-31E	Q1
30-015-33445	Lost Tank 35 State #13Q	A	35-21S-31E	Q1
30-015-33434	Lost Tank 35 State #14	B	35-21S-31E	Q1
30-015-31926	Lost Tank 35 State #16	D	35-21S-31E	Q1
30-025-35918	Mills 19 #1	E	19-22S-32E	R1
30-025-37184	Proximity 30 Federal #3	F	30-22S-32E	S1
30-015-26894	State 2 #1	P	2-22S-31E	T1
30-015-28416	State 2 #2	O	2-22S-31E	T1
30-015-28456	State 2 #4	J	2-22S-31E	T1
30-025-46474	Lost Tank 30 19 Federal Com #1H	W/2 W/2 W/2 W/2	19-22S-32E 30-22S-32E	U1
30-025-45182	Lost Tank 30 19 Federal Com #31H	W/2 W/2 W/2 W/2	19-22S-32E 30-22S-32E	U1
30-025-49147	Dr Pi Unit #31H	W/2 W/2 W/2 W/2	8-22S-32E 17-22S-32E	V1
30-025-49148	Dr Pi Unit #32H	E/2 W/2 E/2 W/2	8-22S-32E 17-22S-32E	V1
30-025-48951	Dr Pi Unit #34H	E/2 E/2	8-22S-32E 17-22S-32E	V1
30-025-48952	Dr Pi Unit #35H	E/2 E/2 E/2 E/2	8-22S-32E 17-22S-32E	V1
30-025-49152	Dr Pi Unit #311H	W/2 W/2	8-22S-32E 17-22S-32E	V1
30-025-48955	Dr Pi Unit #312H	W/2 E/2 W/2 E/2	8-22S-32E 17-22S-32E	V1
30-025-48160	Dr Pi Unit #31H	W/2 W/2 W/2 W/2	7-22S-32E 18-22S-32E	V1
30-025-48024	Dr Pi Unit #32H	E/2 W/2 E/2 W/2	7-22S-32E 18-22S-32E	V1
30-025-48025	Dr Pi Unit #34H	E/2 E/2	7-22S-32E 18-22S-32E	V1
30-025-48166	Dr Pi Unit #311H	W/2 W/2	7-22S-32E 18-22S-32E	V1
30-025-48167	Dr Pi Unit #312H	W/2 E/2 W/2 E/2	7-22S-32E 18-22S-32E	V1
30-025-48168	Dr Pi Unit #313H	E/2 E/2 E/2 E/2	7-22S-32E 18-22S-32E	V1
30-025-48282	Dr Pi Unit #21H	W/2 W/2	8-22S-32E 17-22S-32E	V1

30-025-48947	Dr Pi Unit #23H	W/2 W/2	8-22S-32E 17-22S-32E	V1
30-025-48949	Dr Pi Unit #25H	E/2 E/2	8-22S-32E 17-22S-32E	V1
30-025-48950	Dr Pi Unit #26H	E/2 E/2	8-22S-32E 17-22S-32E	V1
30-025-47835	Dr Pi Unit #21H	W/2 W/2	7-22S-32E 18-22S-32E	V1
30-025-48159	Dr Pi Unit #25H	E/2 E/2	7-22S-32E 18-22S-32E	V1
30-025-48163	Dr Pi Unit #72H	W/2 W/2	7-22S-32E 18-22S-32E	V1
30-025-48162	Dr Pi Unit #71H	W/2 W/2	7-22S-32E 18-22S-32E	V1
30-025-47867	Dr Pi Unit #24H	E/2 E/2	7-22S-32E 18-22S-32E	V1
30-025-48157	Dr Pi Unit #22H	W/2 W/2	7-22S-32E 18-22S-32E	V1
30-025-54180	Dr Pi Unit #15H	E/2 E/2 E/2 E/2	7-22S-32E 18-22S-32E	V1
30-025-54176	Dr Pi Unit #3H	W/2 E/2 W/2 E/2	7-22S-32E 18-22S-32E	V1
30-025-54175	Dr Pi Unit #2H	W/2 W/2	7-22S-32E 18-22S-32E	V1
30-025-54177	Dr Pi Unit #4H	E/2 E/2 E/2 E/2	7-22S-32E 18-22S-32E	V1
30-025-54179	Dr Pi Unit #12H	W/2 W/2	7-22S-32E 18-22S-32E	V1
30-025-54209	Dr Pi Unit #1H	W/2 W/2	7-22S-32E 18-22S-32E	V1
30-025-54178	Dr Pi Unit #11H	W/2 W/2	7-22S-32E 18-22S-32E	V1
30-025-48954	Dr Pi Unit #74H	E/2 E/2	8-22S-32E 17-22S-32E	V1
30-025-48953	Dr Pi Unit #73H	E/2 E/2	8-22S-32E 17-22S-32E	V1
30-025-49151	Dr Pi Unit #72H	W/2 W/2	8-22S-32E 17-22S-32E	V1
30-025-49150	Dr Pi Unit #71H	W/2 W/2	8-22S-32E 17-22S-32E	V1
30-025-48948	Dr Pi Unit #24H	E/2 E/2	8-22S-32E 17-22S-32E	V1
30-025-48945	Dr Pi Unit #12H	E/2 E/2	8-22S-32E 17-22S-32E	V1
30-025-48944	Dr Pi Unit #11H	W/2 W/2	8-22S-32E 17-22S-32E	V1
30-015-47949	Top Spot 12 13 Federal Com #34H	E/2 E/2	12-22S-31E 13-22S-31E	V2

30-015-47887	Top Spot 12 13 Federal Com #35H	E/2 E/2	12-22S-31E 13-22S-31E	V2
30-015-47625	Top Spot 12 13 Federal Com #313H	E/2 E/2	12-22S-31E 13-22S-31E	V2
30-015-48594	Top Spot 12 13 Federal Com #1H	W/2 W/2 W/2 W/2	12-22S-31E 13-22S-31E	V2
30-015-48595	Top Spot 12 13 Federal Com #11H	W/2 W/2 W/2 W/2	12-22S-31E 13-22S-31E	V2
30-015-47771	Top Spot 12 13 Federal Com #21H	W/2 W/2 W/2 W/2	12-22S-31E 13-22S-31E	V2
30-015-48597	Top Spot 12 13 Federal Com #31H	W/2 W/2	12-22S-31E 13-22S-31E	V2
30-015-48596	Top Spot 12 13 Federal Com #32H	W/2 W/2	12-22S-31E 13-22S-31E	V2
30-015-47627	Top Spot 12 13 Federal Com #311H	W/2 W/2	12-22S-31E 13-22S-31E	V2
30-015-47626	Top Spot 12 13 Federal Com #312H	W/2 W/2	12-22S-31E 13-22S-31E	V2
30-015-47639	Top Spot 12 13 Federal Com #25H	W/2 E/2 W/2 E/2	12-22S-31E 13-22S-31E	V2
30-015-47885	Top Spot 12 13 Federal Com #23H	E/2 W/2 E/2 W/2	12-22S-31E 13-22S-31E	V2
30-015-47888	Top Spot 12 13 Federal Com #26H	E/2 E/2 E/2 E/2	12-22S-31E 13-22S-31E	V2
30-015-47889	Top Spot 12 13 Federal Com #22H	E/2 W/2 E/2 W/2	12-22S-31E 13-22S-31E	V2
30-015-47953	Top Spot 12 13 Federal Com #33H	E/2 E/2 E/2 E/2	12-22S-31E 13-22S-31E	V2
30-015-47954	Top Spot 12 13 Federal Com #24H	W/2 E/2 W/2 E/2	12-22S-31E 13-22S-31E	V2
30-015-54756	Olive Won Unit #136H	E/2 E/2 E/2 E/2	24-22S-31E 25-22S-31E	W1
30-015-54746	Olive Won Unit #131H	W/2 W/2 W/2 W/2	24-22S-31E 25-22S-31E	W1
30-015-54747	Olive Won Unit #132H	W/2 W/2 W/2 W/2	24-22S-31E 25-22S-31E	W1
30-015-56138	Olive Won Unit #101H	W2 W2	24-22S-31E 25-22S-31E	W1
30-015-56139	Olive Won Unit #102H	W2 W2	24-22S-31E 25-22S-31E	W1
30-015-56140	Olive Won Unit #103H	E2 E2	24-22S-31E 25-22S-31E	W1
30-015-56142	Olive Won Unit #104H	E2 E2	24-22S-31E 25-22S-31E	W1
30-015-54655	Olive Won Unit #105H	E2 E2	24-22S-31E 25-22S-31E	W1
30-015-54748	Olive Won Unit #133H	E/2 W/2 E/2 W/2	24-22S-31E 25-22S-31E	W1

30-015-54757	Olive Won Unit #137H	E/2 W/2 E/2 W/2	24-22S-31E 25-22S-31E	W1
30-015-54749	Olive Won Unit #134H	W/2 E/2 W/2 E/2	24-22S-31E 25-22S-31E	W1
30-015-54734	Olive Won Unit #174H	W/2 E/2 W/2 E/2	24-22S-31E 25-22S-31E	W1
30-015-54755	Olive Won Unit #135H	E/2 E/2 E/2 E/2	24-22S-31E 25-22S-31E	W1
30-015-55187	Olive Won Unit #33H	S/2 All	26-22S-31E 35-22S-31E	W1
30-015-55179	Olive Won Unit #32H	S/2 All	26-22S-31E 35-22S-31E	W1
30-015-55189	Olive Won Unit #34H	S/2 All	26-22S-31E 35-22S-31E	W1
30-015-55177	Olive Won Unit #31H	S/2 All	26-22S-31E 35-22S-31E	W1
30-015-55215	Olive Won Unit #35H	S/2 All	26-22S-31E 35-22S-31E	W1
30-015-55180	Olive Won Unit #36H	S/2 All	26-22S-31E 35-22S-31E	W1
30-015-55181	Olive Won Unit #37H	S/2 All	26-22S-31E 35-22S-31E	W1
30-015-55182	Olive Won Unit #4H	S/2 All	26-22S-31E 35-22S-31E	W1
30-015-55183	Olive Won Unit #71H	S/2 All	26-22S-31E 35-22S-31E	W1
30-015-56502	Olive Won Unit #231H	W2 NW4	23-22S-31E 26-22S-31E	W1
30-015-56503	Olive Won Unit #232H	W2 NW4	23-22S-31E 26-22S-31E	W1
30-015-56509	Olive Won Unit #233H	W2 NW4	23-22S-31E 26-22S-31E	W1
30-015-56510	Olive Won Unit #234H	E2 NE4	23-22S-31E 26-22S-31E	W1
30-015-57294	Olive Won Unit #235H	E2 NE4	23-22S-31E 26-22S-31E	W1
30-015-56522	Olive Won Unit #236H	E2 NE4	23-22S-31E 26-22S-31E	W1
30-015-56524	Olive Won Unit #237H	E2 NE4	23-22S-31E 26-22S-31E	W1
30-025-48464	Lost Tank 30 19 Federal Com #33H	W/2 W/2	19-22S-32E 30-22S-32E	X1
30-025-48691	Lost Tank 30 19 Federal Com #41H	W/2 W/2	19-22S-32E 30-22S-32E	X1
30-025-47543	Lost Tank 30 19 Federal Com #22H	W/2 W/2	19-22S-32E 30-22S-32E	X1
30-025-47941	Lost Tank 30 19 Federal Com #11H	W/2 W/2	19-22S-32E 30-22S-32E	X1

30-025-47942	Lost Tank 30 19 Federal Com #21H	W/2 W/2	19-22S-32E 30-22S-32E	X1
30-025-47944	Lost Tank 30 19 Federal Com #32H	W/2 W/2	19-22S-32E 30-22S-32E	X1
30-025-47945	Lost Tank 30 19 Federal Com #71H	W/2 W/2	19-22S-32E 30-22S-32E	X1
30-015-30635	Jacque AQJ State #3	N	34-21S-31E	Y1
30-015-29988	Loper 34 State #1	E	34-21S-31E	Y1
30-025-52491	Regal Lager 31 19 Federal Com #34H	E/2 E/2 E/2	19-21S-32E 30-21S-32E 31-21S-32E	Z2
30-025-52492	Regal Lager 31 19 Federal Com #35H	E/2 E/2 E/2	19-21S-32E 30-21S-32E 31-21S-32E	Z2
30-025-52493	Regal Lager 31 19 Federal Com #36H	E/2 E/2 E/2	19-21S-32E 30-21S-32E 31-21S-32E	Z2
30-025-52488	Regal Lager 31 19 Federal Com #31H	W/2 W/2 W/2	19-21S-32E 30-21S-32E 31-21S-32E	Z2
30-025-52489	Regal Lager 31 19 Federal Com #32H	W/2 W/2 W/2	19-21S-32E 30-21S-32E 31-21S-32E	Z2
30-025-52490	Regal Lager 31 19 Federal Com #33H	W/2 W/2 W/2	19-21S-32E 30-21S-32E 31-21S-32E	Z2
30-025-52620	Regal Lager 31 19 Federal Com #71H	W/2 W/2 W/2 W/2 W/2 W/2	19-21S-32E 30-21S-32E 31-21S-32E	Z2
30-025-52513	Regal Lager 31 19 Federal Com #72H	E/2 W/2 E/2 W/2 E/2 W/2	19-21S-32E 30-21S-32E 31-21S-32E	Z2
30-025-52514	Regal Lager 31 19 Federal Com #73H	W/2 E/2 W/2 E/2 W/2 E/2	19-21S-32E 30-21S-32E 31-21S-32E	Z2
30-025-52515	Regal Lager 31 19 Federal Com #74H	E/2 E/2 E/2 E/2 E/2 E/2	19-21S-32E 30-21S-32E 31-21S-32E	Z2
30-025-52224	Gold Log 4 9 Federal Com #71H	All All	4-22S-32E 9-22S-32E	Z1
30-025-52190	Gold Log 4 9 Federal Com #72H	All All	4-22S-32E 9-22S-32E	Z1
30-025-52208	Gold Log 4 9 Federal Com #73H	All All	4-22S-32E 9-22S-32E	Z1
30-025-52191	Gold Log 4 9 Federal Com #74H	All All	4-22S-32E 9-22S-32E	Z1
30-025-53818	Gold Log 4 9 Federal Com #22H	All All	4-22S-32E 9-22S-32E	Z1

30-025-53809	Gold Log 4 9 Federal Com #12H	All All	4-22S-32E 9-22S-32E	Z1
30-025-53812	Gold Log 4 9 Federal Com #23H	All All	4-22S-32E 9-22S-32E	Z1
30-025-53815	Gold Log 4 9 Federal Com #1H	All All	4-22S-32E 9-22S-32E	Z1
30-025-53814	Gold Log 4 9 Federal Com #26H	All All	4-22S-32E 9-22S-32E	Z1
30-025-53811	Gold Log 4 9 Federal Com #16H	All All	4-22S-32E 9-22S-32E	Z1
30-025-53807	Gold Log 4 9 Federal Com #2H	All All	4-22S-32E 9-22S-32E	Z1
30-025-53817	Gold Log 4 9 Federal Com #13H	All All	4-22S-32E 9-22S-32E	Z1
30-025-53816	Gold Log 4 9 Federal Com #4H	All All	4-22S-32E 9-22S-32E	Z1
30-025-53813	Gold Log 4 9 Federal Com #25H	All All	4-22S-32E 9-22S-32E	Z1
30-025-53808	Gold Log 4 9 Federal Com #3H	All All	4-22S-32E 9-22S-32E	Z1
30-025-52225	Gold Log 4 9 Federal Com #311H	All All	4-22S-32E 9-22S-32E	Z1
30-025-52192	Gold Log 4 9 Federal Com #313H	All All	4-22S-32E 9-22S-32E	Z1
30-025-52187	Gold Log 4 9 Federal Com #32H	All All	4-22S-32E 9-22S-32E	Z1
30-025-52188	Gold Log 4 9 Federal Com #33H	All All	4-22S-32E 9-22S-32E	Z1
30-025-52189	Gold Log 4 9 Federal Com #34H	All All	4-22S-32E 9-22S-32E	Z1
30-025-52186	Gold Log 4 9 Federal Com #35H	All All	4-22S-32E 9-22S-32E	Z1

Sante Fe Main Office
Phone: (505) 476-3441

General Information
Phone: (505) 629-6116

Online Phone Directory
https://www.emnrd.nm.gov/ocd/contact-us

State of New Mexico
Energy, Minerals and Natural Resources
Oil Conservation Division
1220 S. St Francis Dr.
Santa Fe, NM 87505

CONDITIONS

Action 508678

CONDITIONS

Operator: OXY USA INC P.O. Box 4294 Houston, TX 772104294	OGRID: 16696
	Action Number: 508678
	Action Type: [C-107] Surface Commingle or Off-Lease (C-107B)

CONDITIONS

Created By	Condition	Condition Date
sarah.clelland	Please review the content of the order to ensure you are familiar with the authorities granted and any conditions of approval. If you have any questions regarding this matter, please email us at OCD.Engineer@emnrd.nm.gov.	10/7/2025