Revised March 23, 2017

| RECEIVED: | REVIEWER: | TYPE: | APP NO: |
|---|---|---|---|
| | | | |

ABOVE THIS TABLE FOR OCD DIVISION USE ONLY

**NEW MEXICO OIL CONSERVATION DIVISION**
- Geological & Engineering Bureau –
1220 South St. Francis Drive, Santa Fe, NM 87505

# ADMINISTRATIVE APPLICATION CHECKLIST

THIS CHECKLIST IS MANDATORY FOR ALL ADMINISTRATIVE APPLICATIONS FOR EXCEPTIONS TO DIVISION RULES AND REGULATIONS WHICH REQUIRE PROCESSING AT THE DIVISION LEVEL IN SANTA FE

**Applicant:** XTO Permian Operating **OGRID Number:** 373075
**Well Name:** Multiple Wells **API:** Multiple
**Pool:** WC Willimas Sink; Bone Spring **Pool Code:** 97650

**SUBMIT ACCURATE AND COMPLETE INFORMATION REQUIRED TO PROCESS THE TYPE OF APPLICATION INDICATED BELOW**

1) **TYPE OF APPLICATION:** Check those which apply for [A]
   A. Location – Spacing Unit – Simultaneous Dedication
   ☐ NSL ☐ NSP (PROJECT AREA) ☐ NSP (PRORATION UNIT) ☐ SD

   B. Check one only for [ I ] or [ II ]
   [ I ] Commingling – Storage – Measurement
   ☐ DHC ☐ CTB ☐ PLC ☐ PC ☐ OLS ☒ OLM
   [ II ] Injection – Disposal – Pressure Increase – Enhanced Oil Recovery
   ☐ WFX ☐ PMX ☐ SWD ☐ IPI ☐ EOR ☐ PPR

**FOR OCD ONLY**
☐ Notice Complete
☐ Application Content Complete

2) **NOTIFICATION REQUIRED TO:** Check those which apply.
   A. ☐ Offset operators or lease holders
   B. ☒ Royalty, overriding royalty owners, revenue owners
   C. ☐ Application requires published notice
   D. ☐ Notification and/or concurrent approval by SLO
   E. ☒ Notification and/or concurrent approval by BLM
   F. ☐ Surface owner
   G. ☒ For all of the above, proof of notification or publication is attached, and/or,
   H. ☐ No notice required

3) **CERTIFICATION:** I hereby certify that the information submitted with this application for administrative approval is **accurate** and **complete** to the best of my knowledge. I also understand that **no action** will be taken on this application until the required information and notifications are submitted to the Division.

**Note: Statement must be completed by an individual with managerial and/or supervisory capacity.**

Russell Young
Print or Type Name

10/15/2025
Date

832-302-5430
Phone Number

Russell Young
Signature

russell.young@exxonmobil.com
e-mail Address

October 15, 2025

**VIA ONLINE FILING**

Albert C.S. Chang, Division Director
Oil Conservation Division
New Mexico Department of Energy, Minerals and Natural Resources
1220 South Saint Francis Drive
Santa Fe, NM 87505

**Re: Application of XTO Permian Operating, LLC for administrative approval to surface commingle (lease) oil and gas production, off-lease storage and measure from participating area (PA) comprised of Sections 13, 14, 15, 23, and 24; Eddy County, New Mexico.**

Dear Mr. Chang:

XTO Permian Operating, LLC (OGRID No. 373075) ("XTO"), pursuant to 19.15.12.10 NMAC, seeks administrative approval to surface commingle (off lease) diversely owned oil and gas production at the Big Eddy Unit DI 30 Central Tank Battery ("CTB") *insofar as all existing and future wells drilled in the following spacing units:*

(a) The **9,355.64-acre**, of participating area (PA) comprised of Section 13: All; Section 14: All; Section 22: S2SE; Section 23: All; Section 24: All; Section 25: All; Section 26: All; Section 27: E2; Township 22 South, Range 31 East Section 17: ALL; Section 18: Lots 1,2,3,4, E2W2, E2; Section 19: Lots 1,2,3,4, E2W2, E2; Section 20: All; Section 21: All; Section 28: All; Section 29: All; Section 30: Lots 1,2,3,4, E2W2, E2, Township 20 South, Range 32 East, in the **[97650] WC WILLIAMS SINK; BONE SPRING** currently dedicated to the following well:

| | | |
|---|---|---|
| 30-015-46199 | BIG EDDY UNIT 30E QUI GON | 102H |
| 30-015-48159 | BIG EDDY UNIT 30E QUI-GON | 103H |
| 30-015-46244 | BIG EDDY UNIT 30 REY | 102H |
| 30-015-46196 | BIG EDDY UNIT 30E OBI WAN #102H | 102H |
| 30-015-48156 | BIG EDDY UNIT 30E REY | 103H |
| 30-015-46194 | BIG EDDY UNIT 30E SKYWALKER | 100H |
| 30-015-46195 | BIG EDDY UNIT 30E SKYWALKER | 101H |
| 30-015-46933 | BIG EDDY UNIT 30E SKYWALKER | 102H |
| 30-015-46935 | BIG EDDY UNIT 30E SKYWALKER | 103H |
| 30-015-46937 | BIG EDDY UNIT 30E SKYWALKER | 104H |
| 30-015-46938 | BIG EDDY UNIT 30E SKYWALKER | 105H |
| 30-015-46198 | BIG EDDY 30E JEDI FEDERAL COM #102H | 102H – Standalone Meter |
| | **REMOVE** | |
| 30-015-46243 | BIG EDDY UNIT 30E ANAKIN #203H | 203H Plugged & site released(remove) |
| 30-015-46197 | BIG EDDY UNIT 30E ANAKIN #102H | 102H Never drilled |

**XTO Permian Operating, LLC.**
**Russell Young**
**6401Holiday Hill Road, Bldg 5**
**Midland, TX 79707**
**832-302-5430**
**Russel.young@exxonmobil.com**

(b) Pursuant to 19.15.12.10.C(4)(g), *from all future additions of pools, leases or leases and pools to the Big Eddy Unit DI 30 Central Tank Battery* with notice provided only to the owners of interests to be added.

Oil and gas production from these spacing units will be commingled and sold at the CTB, located in the NESE of Section 15, T20S, R31E. XTO plans to use the well test method for allocation of production and measurement purposes. Production will flow from the wellbore to either a test separator or bulk (common) production separator. The test separator will separate the gas, oil, and water. Gas production from the test separator will be metered with a calibrated orifice meter that is manufactured to AGA specifications. Oil production from the test separator will be metered using a Coriolis meter. Gas and oil production will then be allocated daily based on the most recent individual well tests of oil, gas and water.

**Exhibit 1** is a land plat showing XTO's current development plan, well pads, and the central Tank battery ("CTB Site") in the subject area. The plat also identifies the wellbores and lease/spacing unit boundaries.

**Exhibit 2** is a completed Application for Surface Commingling (Diverse Ownership) Form C-107-B, that includes a statement from Steven D. Wolfe, Senior Facilities Engineer with XTO, explaining how XTO plans to utilize the well test method and the measurement devices to be utilized, along with a detailed schematic of the surface facilities (Attachment A to the statement).

**Exhibit 3** is a C-102 for each of the wells currently permitted or drilled within the existing spacing units.

Ownership is diverse between the above-described spacing units, each of which are either subject to a pooling agreement or a pooling order and are therefore considered "leases" as defined by 19.15.12.7(C) NMAC. **Exhibit 4** is a list of the interest owners (including any owners of royalty or overriding royalty interest) affected by this application, an example of the letters sent by certified mail advising the interest owners that any objections must be filed in writing with the Division within 20 days from the date the Division receives this application, and proof of mailing. A copy of this application has been provided to the Bureau of Land Management since federal lands are involved.

Thank you for your consideration of this application. Please feel free to contact me if you have any questions or need additional information.

Sincerely,

Russell Young

Russell Young
New Mexico Commingle Manager
Permian Business Unit

**XTO Permian Operating, LLC.**
**Russell Young**
**6401Holiday Hill Road, Bldg 5**
**Midland, TX 79707**
**832-302-5430**
**Russel.young@exxonmobil.com**

ExxonMobil

Date: 10/27/2025

# Big Eddy Unit DI 30 Battery Lease Map

EDDY COUNTY, NM

***Legend***

- Gas FMP/Sales Meter
- Oil FMP/Sales Meter
- BATTERY
- BIG EDDY UNIT
- BONESPRING PA NMNM105693911

FEDERAL SURFACE & MINERAL LEASE

- NMLC 0063667

***Wells***

3001546198 BIG EDDY 30E JEDI FEDERAL COM 102H
3001546199 BIG EDDY UNIT 30E QUI GON 102H
3001548159 BIG EDDY UNIT 30E QUI-GON 103H
3001546244 BIG EDDY UNIT 30 REY 102H
3001548156 BIG EDDY UNIT 30E REY 103H
3001546194 BIG EDDY UNIT 30E SKYWALKER 100H
3001546195 BIG EDDY UNIT 30E SKYWALKER 101H
3001546933 BIG EDDY UNIT 30E SKYWALKER 102H
3001546935 BIG EDDY UNIT 30E SKYWALKER 103H
3001546937 BIG EDDY UNIT 30E SKYWALKER 104H
3001546938 BIG EDDY UNIT 30E SKYWALKER 105H

***Location***

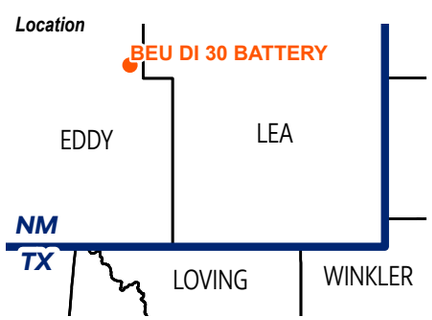


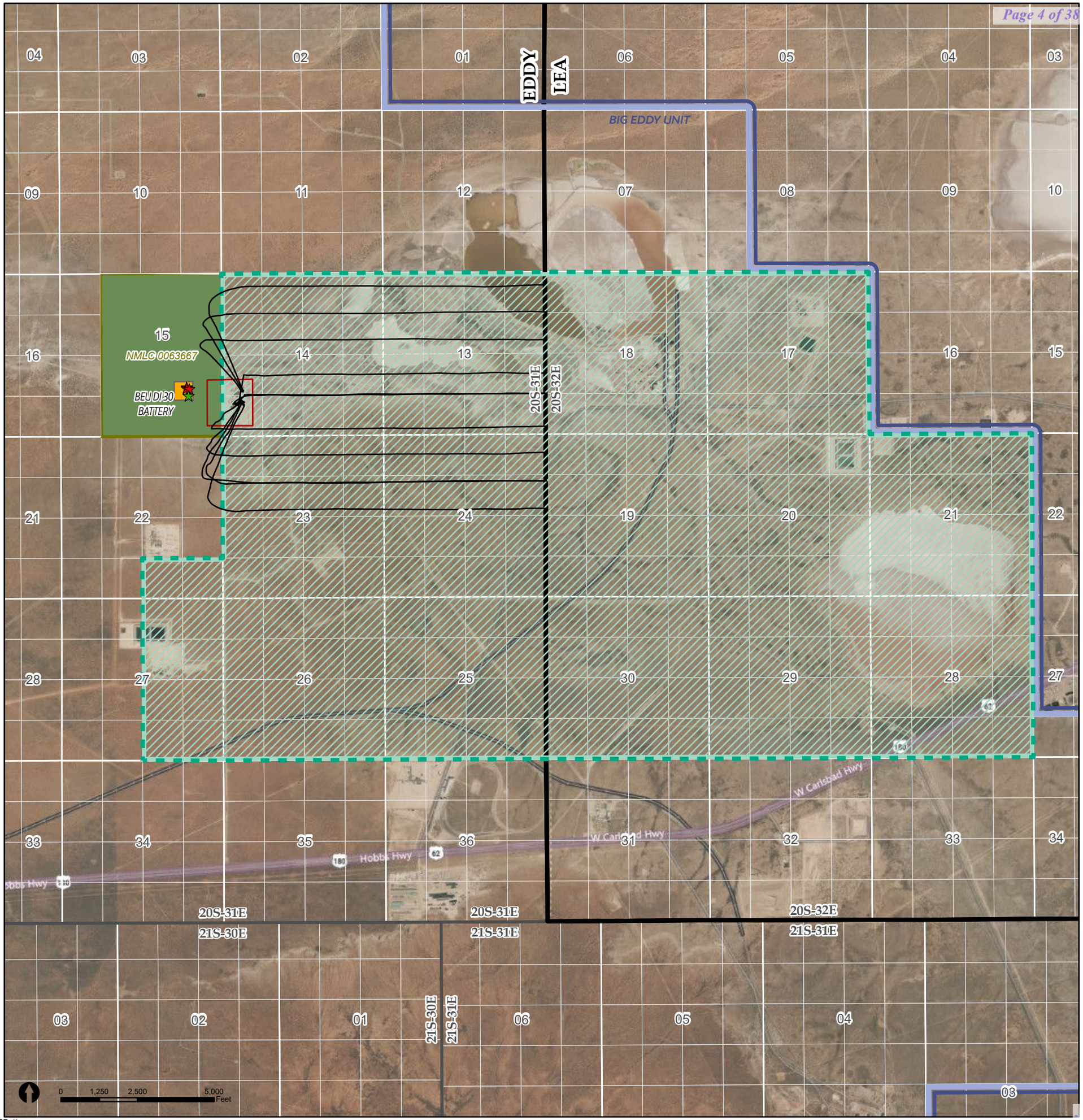




Path: O:\Arcview\Projects\Kelli_Project_APRXs\PD_HeatherRiley_Commingle_BEU_DI_30Battery.aprx

Santa Fe Main Office
Phone: (505) 476-3441
General Information
Phone: (505) 629-6116

Online Phone Directory Visit:
https://www.emnrd.nm.gov/ocd/contact-us/

State of New Mexico
Energy, Minerals and Natural Resources Department

**OIL CONSERVATION DIVISION**
1220 S. St Francis Drive
Santa Fe, New Mexico 87505

Form C-107-B
Revised August 1, 2011

Submit the original application to the Santa Fe office with one copy to the appropriate District Office.

# APPLICATION FOR SURFACE COMMINGLING (DIVERSE OWNERSHIP)

OPERATOR NAME: XTO Permian Operating, LLC
OPERATOR ADDRESS: 6401 Holiday Hill Midland, TX 79707
APPLICATION TYPE:

☐ Pool Commingling ☒ Lease Commingling ☐ Pool and Lease Commingling ☐ Off-Lease Storage and Measurement (Only if not Surface Commingled)

LEASE TYPE: ☐ Fee ☐ State ☒ Federal

Is this an Amendment to existing Order? ☒ Yes ☐ No If "Yes", please include the appropriate Order No. PLC-652
Have the Bureau of Land Management (BLM) and State Land office (SLO) been notified in writing of the proposed commingling
☒ Yes ☐ No

## (A) POOL COMMINGLING
**Please attach sheets with the following information**

| (1) Pool Names and Codes | Gravities / BTU of Non-Commingled Production | Calculated Gravities / BTU of Commingled Production | | Calculated Value of Commingled Production | Volumes |
|---|---|---|---|---|---|
| | | | | | |
| | | | | | |
| | | | | | |
| | | | | | |
| | | | | | |

(2) Are any wells producing at top allowables? ☐ Yes ☐ No
(3) Has all interest owners been notified by certified mail of the proposed commingling? ☐ Yes ☐ No.
(4) Measurement type: ☐ Metering ☐ Other (Specify)
(5) Will commingling decrease the value of production? ☐ Yes ☐ No If "yes", describe why commingling should be approved

## (B) LEASE COMMINGLING
**Please attach sheets with the following information**

(1) Pool Name and Code. WC Williams Sink; Bone Spring
(2) Is all production from same source of supply? ☒ Yes ☐ No
(3) Has all interest owners been notified by certified mail of the proposed commingling? ☒ Yes ☐ No
(4) Measurement type: ☐ Metering ☒ Other (Specify) Well Testing

## (C) POOL and LEASE COMMINGLING
**Please attach sheets with the following information**

(1) Complete Sections A and E.

## (D) OFF-LEASE STORAGE and MEASUREMENT
**Please attached sheets with the following information**

(1) Is all production from same source of supply? ☒ Yes ☐ No
(2) Include proof of notice to all interest owners.

## (E) ADDITIONAL INFORMATION (for all application types)
**Please attach sheets with the following information**

(1) A schematic diagram of facility, including legal location.
(2) A plat with lease boundaries showing all well and facility locations. Include lease numbers if Federal or State lands are involved.
(3) Lease Names, Lease and Well Numbers, and API Numbers.

I hereby certify that the information above is true and complete to the best of my knowledge and belief.

SIGNATURE: Russell Young TITLE: New Mexico Commingle Manager DATE: 10/16/2025

TYPE OR PRINT NAME Russell Young TELEPHONE NO.: 832-302-5430

E-MAIL ADDRESS: russell.young@exxonmobil.com

**Facility Process Flow and Measurement**

The production from each well will flow from its respective surface hole location through a flowline to an inlet header on the wellpad facility. The layout of the Facility is shown on the included Site Flow Diagram (SFD). The inlet header directs the well production into either a test separator or bulk (common) production separator. If a well is not directed to the test separator, the flow is directed into the bulk production separator.

The test separator is a horizontal vessel where the gas, oil, and water are separated and measured. The test separator has been designed to handle the Initial Production (IP) Rates of the wells and accurately measure the fluids. The gas flow is measured using an orifice meter following API Standard MPMS 14.3.2 and the flow is calculated using an electronic flow meter (EFM). The oil flow is measured using a Coriolis flow meter following the API Standard MPMS 5.6. The water flow is measured using a mag meter. One well can be tested every day. Well test by separating and metering the oil production from the well for either (a) a minimum of twenty-four (24) consecutive hours; or (b) a combination of nonconsecutive periods that meet the following conditions: (i) each period shall be a minimum of six (6) hours; and (ii) the total duration of the nonconsecutive periods shall be a minimum of eighteen (18) hours. The Well Test Method used follows the American Petroleum Institute's Manual of Petroleum Measurement Standards, Chapter 20 (API MPMS 20.1) and meets BLM, state, and federal regulations.

After separation at the wellpad, the gas from the test and bulk separators is recombined into a shared gas line. This gas is measured going to the FMP/Sales meter utilizing an orifice meter and the flow is calculated using an electronic flow meter (EFM). The gas meter is the gas FMP/Sales for the wellpad facility and complies with the calibration requirements specified in 43 CFR 3175.

Flash gas is also recovered with compression from heater treaters, VRTs, and low-pressure vessels. This gas is measured going to the FMP/Sales meter utilizing an orifice meter and the flow is calculated using an electronic flow meter (EFM). The shared gas line allows flow to either a gas sales line or to a flare on location. Gas flow is directed to the flare in the event of an emergency.

After separation, the oil from the test and bulk separators are combined into a shared line routed to a horizontal heater treater where heat is added to meet RVP requirements. From the heater treater the oil is routed to a Vapor Recovery Tower (VRT) and then transferred into the oil pipeline using a LACT unit. The LACT unit has a Coriolis flow meter that will be used as the FMP/Sales. The LACT unit Coriolis meter follows the proving requirements specified in 43 CFR 3174. The FMP/ Sales for the oil is located at the battery facility.

After separation, the water from the test and bulk separators is recombined into a shared line routed to a Surge (Skim) Vessel. The Surge vessel separates any remain gas and oil from the water. The water is pumped into the SWD system pipeline after being measured with a mag meter. The gas is recovered using compression and sent to the gas sales line. The skim oil is recovered and pumped back to the heater treater.

**Reservoir Forecasted Declines**

These wells may produce high volumes for a short three-month period and are then expected to decline for the remaining life of each well. After the initial period of hyperbolic decline, production stabilizes at a more predictable exponential decline rate.

**Production and Allocation**

Based on the decline rates, the wells will be tested at differing frequencies for optimum accuracy. Based on the production decline, the following three periods will be used to determine well test frequency:

- Range 1 – Initial Production Period – from the first production until the earlier of either the peak production rate or thirty (30) days after the first production; minimum 10 well tests/per month
- Range 2 – Plateau Period – the end of the initial production period to the peak decline rate; minimum 3 well tests/per month

- Range 3 – Decline Period – the end of plateau period until will is plugged and abandoned; minimum 3 well tests/ per month when the decline rate is >22% per month, 2 well tests/per month when the decline rate is between 22%-10% per month, and 1 well test/per month when the decline rate is <10% per month

Gas and oil production will then be allocated daily based on the most recent individual well tests of oil, gas, and water.

All the Test Data is collected into our Production Accounting System for Allocation. The allocation methodology is shown specifically in the attached spreadsheet. The time increment for reported sales through the FMP/Sales custody transfer meters is monthly.

Pursuant to Statewide rule 19.15.12.10(C)(4)(g) XTO requests the option to include all future wells drilled in these pools and leases to this commingle order.

**Commingle approval will allow XTO to efficiently and effectively market production from the subject acreage.**

ATTACHMENT A

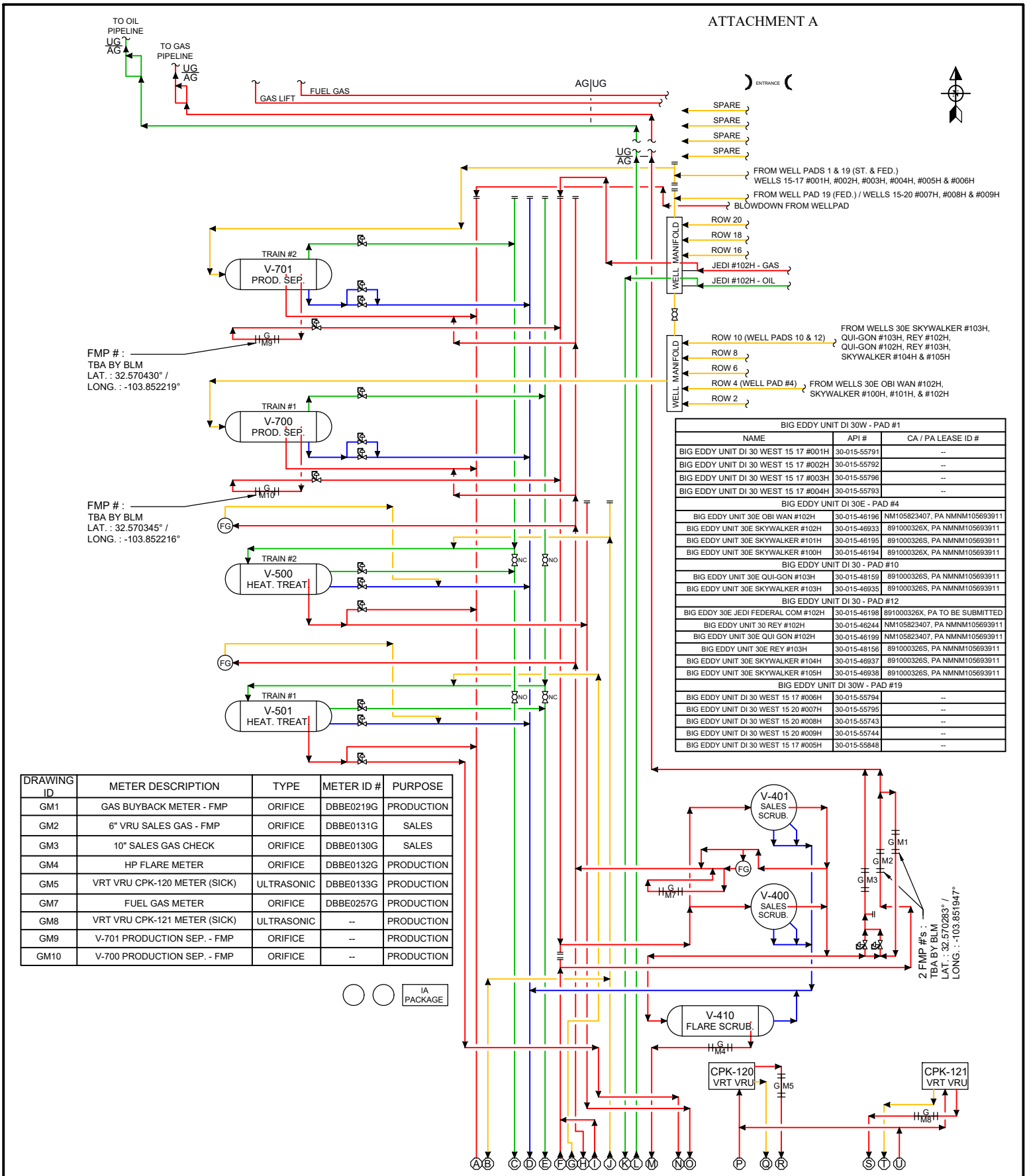


| BIG EDDY UNIT DI 30W - PAD #1 | | |
|---|---|---|
| NAME | API # | CA / PA LEASE ID # |
| BIG EDDY UNIT DI 30 WEST 15 17 #001H | 30-015-55791 | -- |
| BIG EDDY UNIT DI 30 WEST 15 17 #002H | 30-015-55792 | -- |
| BIG EDDY UNIT DI 30 WEST 15 17 #003H | 30-015-55796 | -- |
| BIG EDDY UNIT DI 30 WEST 15 17 #004H | 30-015-55793 | -- |
| BIG EDDY UNIT DI 30E - PAD #4 | | |
| BIG EDDY UNIT 30E OBI WAN #102H | 30-015-46196 | NM105823407, PA NMNM105693911 |
| BIG EDDY UNIT 30E SKYWALKER #102H | 30-015-46933 | 891000326X, PA NMNM105693911 |
| BIG EDDY UNIT 30E SKYWALKER #101H | 30-015-46195 | 891000326S, PA NMNM105693911 |
| BIG EDDY UNIT 30E SKYWALKER #100H | 30-015-46194 | 891000326X, PA NMNM105693911 |
| BIG EDDY UNIT DI 30 - PAD #10 | | |
| BIG EDDY UNIT 30E QUI-GON #103H | 30-015-48159 | 891000326S, PA NMNM105693911 |
| BIG EDDY UNIT 30E SKYWALKER #103H | 30-015-46935 | 891000326S, PA NMNM105693911 |
| BIG EDDY UNIT DI 30 - PAD #12 | | |
| BIG EDDY 30E JEDI FEDERAL COM #102H | 30-015-46198 | 891000326X, PA TO BE SUBMITTED |
| BIG EDDY UNIT 30 REY #102H | 30-015-46244 | NM105823407, PA NMNM105693911 |
| BIG EDDY UNIT 30E QUI GON #102H | 30-015-46199 | NM105823407, PA NMNM105693911 |
| BIG EDDY UNIT 30E REY #103H | 30-015-48156 | 891000326S, PA NMNM105693911 |
| BIG EDDY UNIT 30E SKYWALKER #104H | 30-015-46937 | 891000326S, PA NMNM105693911 |
| BIG EDDY UNIT 30E SKYWALKER #105H | 30-015-46938 | 891000326S, PA NMNM105693911 |
| BIG EDDY UNIT DI 30W - PAD #19 | | |
| BIG EDDY UNIT DI 30 WEST 15 17 #006H | 30-015-55794 | -- |
| BIG EDDY UNIT DI 30 WEST 15 20 #007H | 30-015-55795 | -- |
| BIG EDDY UNIT DI 30 WEST 15 20 #008H | 30-015-55743 | -- |
| BIG EDDY UNIT DI 30 WEST 15 20 #009H | 30-015-55744 | -- |
| BIG EDDY UNIT DI 30 WEST 15 17 #005H | 30-015-55848 | -- |

| DRAWING ID | METER DESCRIPTION | TYPE | METER ID # | PURPOSE |
|---|---|---|---|---|
| GM1 | GAS BUYBACK METER - FMP | ORIFICE | DBBE0219G | PRODUCTION |
| GM2 | 6" VRU SALES GAS - FMP | ORIFICE | DBBE0131G | SALES |
| GM3 | 10" SALES GAS CHECK | ORIFICE | DBBE0130G | SALES |
| GM4 | HP FLARE METER | ORIFICE | DBBE0132G | PRODUCTION |
| GM5 | VRT VRU CPK-120 METER (SICK) | ULTRASONIC | DBBE0133G | PRODUCTION |
| GM7 | FUEL GAS METER | ORIFICE | DBBE0257G | PRODUCTION |
| GM8 | VRT VRU CPK-121 METER (SICK) | ULTRASONIC | -- | PRODUCTION |
| GM9 | V-701 PRODUCTION SEP. - FMP | ORIFICE | -- | PRODUCTION |
| GM10 | V-700 PRODUCTION SEP. - FMP | ORIFICE | -- | PRODUCTION |

| Facility Gas Usage | |
|---|---|
| ROYALTY FREE EQUIPMENT | USAGE |
| V-500 HEAT. TREAT. | 66.7 MCFD |
| V-501 HEAT. TREAT. | 66.7 MCFD |
| HP & LP FLARE PILOTS | 0.6 MCFD |

NOTES:
1. HEATER TREATERS USAGE BASED ON MANUFACTURER'S RECOMMENDED SPECIFICATIONS.
2. FLARE PILOTS USAGE BASED ON MANUFACTURER'S RECOMMENDED SPECIFICATIONS.

EMULSION
WATER
OIL
GAS

| Revision | Description of Change | Date | By | ENG. APPD. By |
|---|---|---|---|---|
| 0 | AS BUILT | 10/21/2020 | LAD | |
| 1 | ADDED WTR PMPS & GUN BBRL. | 6/27/2023 | CK | |
| 2 | AS BUILT / UPDATED | 6/25/2025 | SB/JLF | |
| 2C | ISSUED FOR COMMINGLE | 10/2/2025 | JLF | |

ExxonMobil

BIG EDDY UNIT DI 30
CENTRAL TANK BATTERY - VESSELS
EDDY COUNTY, NEW MEXICO

LAT.: 32.570084° / LONG.: -103.852125°
USA NMLC0063667 / SEC. 15-T20S-R31E, NESE

SITE FACILITY DIAGRAM - SHEET 1 OF 2

FILE NO. BIG EDDY UNIT DI 30 CTB
REV. No. 2C

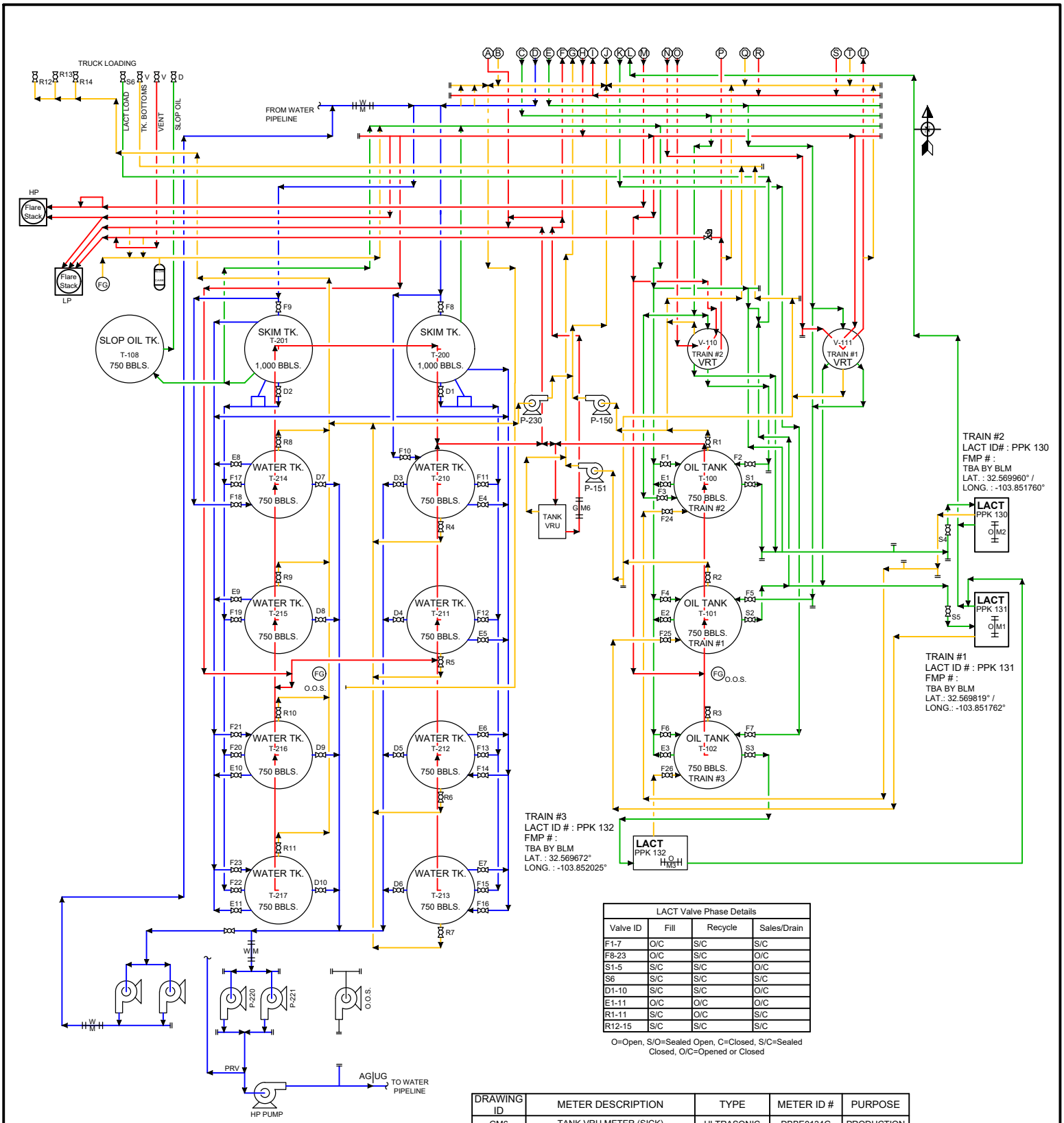


| LACT Valve Phase Details | | | |
|---|---|---|---|
| Valve ID | Fill | Recycle | Sales/Drain |
| F1-7 | O/C | S/C | S/C |
| F8-23 | O/C | S/C | O/C |
| S1-5 | S/C | S/C | O/C |
| S6 | S/C | S/C | S/C |
| D1-10 | S/C | S/C | O/C |
| E1-11 | O/C | O/C | O/C |
| R1-11 | S/C | O/C | S/C |
| R12-15 | S/C | S/C | S/C |

O=Open, S/O=Sealed Open, C=Closed, S/C=Sealed Closed, O/C=Opened or Closed

| DRAWING ID | METER DESCRIPTION | TYPE | METER ID # | PURPOSE |
|---|---|---|---|---|
| GM6 | TANK VRU METER (SICK) | ULTRASONIC | DBBE0134G | PRODUCTION |
| OM1 | TRAIN #2 LACT UNIT PPK-130 - FMP | CORIOLIS | DBBE0135OL | SALES |
| OM2 | TRAIN #1 LACT UNIT PPK-131 - FMP | CORIOLIS | DBBE0136OL | SALES |
| OM3 | TRAIN #3 LACT UNIT PPK-132 - FMP | CORIOLIS | -- | SALES |

| Facility Gas Usage | |
|---|---|
| ROYALTY FREE EQUIPMENT | USAGE |
| V-500 HEAT. TREAT. | 66.7 MCFD |
| V-501 HEAT. TREAT. | 66.7 MCFD |
| HP & LP FLARE PILOTS | 0.6 MCFD |

NOTES:
1. HEATER TREATERS USAGE BASED ON MANUFACTURER'S RECOMMENDED SPECIFICATIONS.
2. FLARE PILOTS USAGE BASED ON MANUFACTURER'S RECOMMENDED SPECIFICATIONS.

EMULSION
WATER
OIL
GAS

| Revision | Description of Change | Date | By | ENG. APPD. By |
|---|---|---|---|---|
| 0 | AS BUILT | 10/21/2020 | LAD | |
| 1 | ADDED WTR PMPS & GUN BBRL. | 6/27/2023 | CK | |
| 2 | AS BUILT / UPDATED | 6/25/2025 | SB/JLF | |
| 2C | ISSUED FOR COMMINGLE | 10/2/2025 | JLF | |

ExxonMobil

BIG EDDY UNIT DI 30
CENTRAL TANK BATTERY - TANKS
EDDY COUNTY, NEW MEXICO

LAT.: 32.570084° / LONG.: -103.852125°
USA NMLC0063667 / SEC. 15-T20S-R31E, NESE

SITE FACILITY DIAGRAM - SHEET 2 OF 2

FILE NO. BIG EDDY UNIT DI 30 CTB
REV. No. 2C

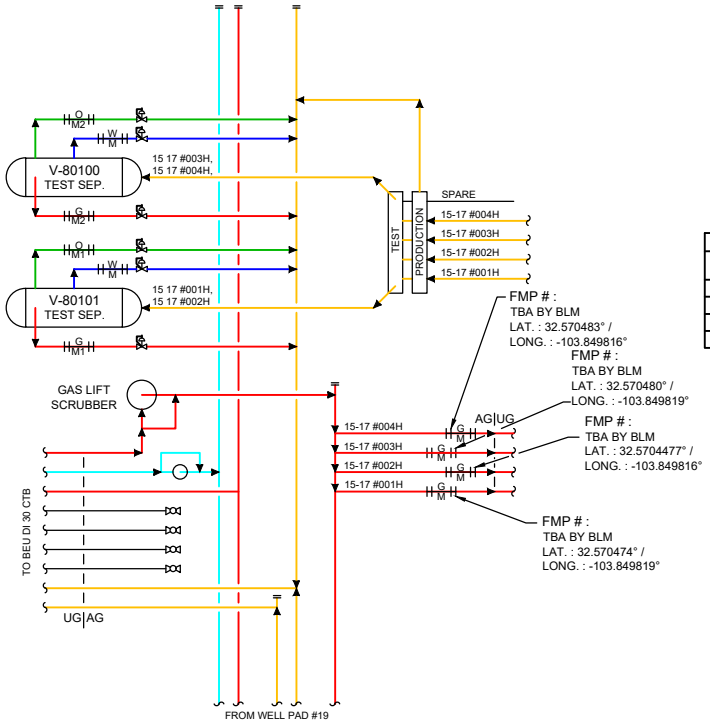


| BIG EDDY UNIT DI 30E - PAD 12 | | | | |
|---|---|---|---|---|
| NAME | API # | GAS LIFT METER # | LEASE ID # | CA/PA/LEASE ID # |
| BIG EDDY UNIT 30 WEST 15 17 #001H | 30-015-55791 | -- FMP | NMNM068294X | -- |
| BIG EDDY UNIT 30 WEST 15 17 #002H | 30-015-55792 | -- FMP | NMNM068294X | -- |
| BIG EDDY UNIT 30 WEST 15 17 #003H | 30-015-55796 | -- FMP | NMNM068294X | -- |
| BIG EDDY UNIT 30 WEST 15 17 #004H | 30-015-55793 | -- FMP | NMNM068294X | -- |

| DRAWING ID | METER DESCRIPTION | TYPE | METER ID # | PURPOSE |
|---|---|---|---|---|
| GM1 | V-80101 TEST SEPARATOR | ORIFICE | -- | ALLOCATION |
| GM2 | V-80100 TEST SEPARATOR | ORIFICE | -- | ALLOCATION |
| OM1 | V-80101 TEST SEPARATOR | CORIOLIS | -- | ALLOCATION |
| OM2 | V-80100 TEST SEPARATOR | CORIOLIS | -- | ALLOCATION |

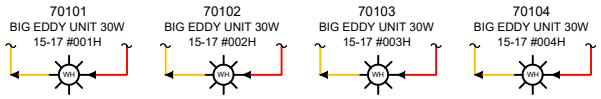


EMULSION
WATER
OIL
GAS
INSTR. AIR

| Revision | Description of Change | Date | By | ENG. APPD. By |
|---|---|---|---|---|
| 0 | ISSUED FOR COMMINGLE | 10/2/2025 | JLF | |

ExxonMobil

# BIG EDDY UNIT DI 30W PAD 1

WELL PAD #1 ROW A LAYOUT
EDDY COUNTY, NEW MEXICO

LAT.: 32.570311° / LONG.: -103.849067°
USA NMLC0063667 / SEC. 15-T20S-R31E,NESE

SITE FACILITY DIAGRAM - SHEET 1 OF 5

FILE NO. BIG EDDY UNIT DI 30 CTB
REV. No. 0

Received by OCD: 10/27/2025 2:49:37 PM
Released to Imaging: 12/23/2025 10:46:56 AM

Page 11 of 38

| BIG EDDY UNIT DI 30E - WELLPAD #4 | | | | |
|---|---|---|---|---|
| NAME | API # | GAS LIFT METER # | LEASE ID # | CA/PA/LEASE ID # |
| BIG EDDY UNIT 30E OBI WAN #102H | 30-015-46196 | DBBE0312G - FMP | NM105823407 | PA NMNM105693911 |
| BIG EDDY UNIT 30E SKYWALKER #102H | 30-015-46933 | DBBE0322G - FMP | 891000326X | PA NMNM105693911 |
| BIG EDDY UNIT 30E SKYWALKER #101H | 30-015-46195 | DBBE0321G - FMP | 891000326S | PA NMNM105693911 |
| BIG EDDY UNIT 30E SKYWALKER #100H | 30-015-46194 | DBBE0320G - FMP | 891000326X | PA NMNM105693911 |

| DRAWING ID | METER DESCRIPTION | TYPE | METER ID # | PURPOSE |
|---|---|---|---|---|
| GM1 | V-80401 TEST SEPARATOR | ORIFICE | DBBE0277G | ALLOCATION |
| GM2 | V-80405 TEST SEPARATOR | ORIFICE | DBBE0276G | ALLOCATION |
| GM3 | V-80406 TEST SEPARATOR | ORIFICE | DBBE0275G | ALLOCATION |
| GM4 | V-80407 TEST SEPARATOR | ORIFICE | DBBE0274G | ALLOCATION |
| OM1 | V-80401 TEST SEPARATOR | CORIOLIS | DBBE0277O | ALLOCATION |
| OM2 | V-80405 TEST SEPARATOR | CORIOLIS | DBBE0276O | ALLOCATION |
| OM3 | V-80406 TEST SEPARATOR | CORIOLIS | DBBE0275O | ALLOCATION |
| OM4 | V-80407 TEST SEPARATOR | CORIOLIS | DBBE0274O | ALLOCATION |

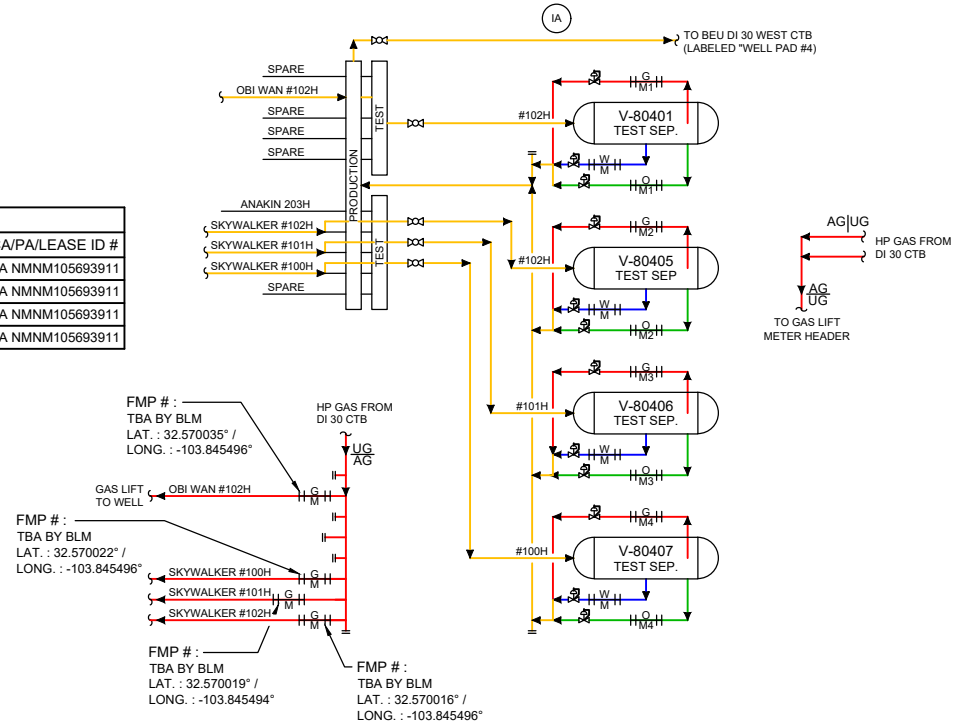


EMULSION
WATER
OIL
GAS

| Revision | Description of Change | Date | By | ENG. APPD. By |
|---|---|---|---|---|
| 0 | AS BUILT | 10/21/2020 | LAD | |
| 1 | ADDED TEST VESSELS | 6/27/2023 | CK | |
| 2 | AS BUILT / UPDATED | 6/25/2025 | SB/JLF | |
| 2C | ISSUED FOR COMMINGLE | 10/2/2025 | JLF | |

ExxonMobil

# BIG EDDY UNIT DI 30E PAD 4

WELL PAD #4 ROW B LAYOUT
EDDY COUNTY, NEW MEXICO

LAT.: 32.569107° / LONG.: -103.847641°
USA NMLC0063667 / SEC. 14-T20S-R31E, NWSW

SITE FACILITY DIAGRAM - SHEET 2 OF 5

FILE NO. BIG EDDY UNIT DI 30 CTB
REV. No. 2C

Received by OCD: 10/27/2025 2:49:37 PM
Released to Imaging: 12/23/2025 10:46:56 AM

Page 12 of 38

Received by OCD: 10/27/2025 2:49:37 PM

| DRAWING ID | METER DESCRIPTION | TYPE | METER ID # | PURPOSE |
|---|---|---|---|---|
| GM1 | V-81001 TEST SEPARATOR | ORIFICE | DBBE0263G | ALLOCATION |
| GM2 | V-81000 TEST SEPARATOR | ORIFICE | DBBE0262G | ALLOCATION |
| OM1 | V-81001 TEST SEPARATOR | CORIOLIS | DBBE0263O | ALLOCATION |
| OM2 | V-81000 TEST SEPARATOR | CORIOLIS | DBBE0262O | ALLOCATION |

| BIG EDDY UNIT DI 30E - WELLPAD #10 | | | | |
|---|---|---|---|---|
| NAME | API # | GAS LIFT METER # | LEASE ID # | CA/PA/LEASE ID # |
| BIG EDDY UNIT 30E QUI-GON #103H | 30-015-48159 | DBBE0315G - FMP | 891000326S | PA NMNM105693911 |
| BIG EDDY UNIT 30E SKYWALKER #103H | 30-015-46935 | DBBE0302G - FMP | 891000326S | PA NMNM105693911 |

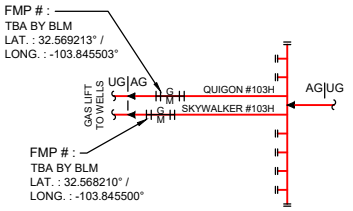

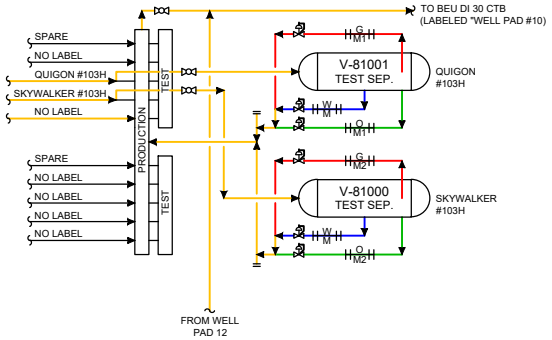


EMULSION
WATER
OIL
GAS

| Revision | Description of Change | Date | By | ENG. APPD. By |
|---|---|---|---|---|
| 0 | AS BUILT | 10/21/2020 | LAD | |
| 1 | ADDED TEST VESSELS | 6/27/2023 | CK | |
| 2 | AS BUILT / UPDATED | 6/25/2025 | SB/JLF | |
| 2C | ISSUED FOR COMMINGLE | 10/2/2025 | JLF | |

ExxonMobil

# BIG EDDY UNIT DI 30E PAD 10

WELL PAD #10 ROW E LAYOUT
EDDY COUNTY, NEW MEXICO

LAT.: 32.569107° / LONG.: -103.847641°
USA NMLC0063667 / SEC. 14-T20S-R31E, NWSW

SITE FACILITY DIAGRAM - SHEET 3 OF 5

FILE NO. BIG EDDY UNIT DI 30 CTB
REV. No. 2C

Released to Imaging: 12/23/2025 10:46:56 AM

Received by OCD: 10/27/2025 2:49:37 PM



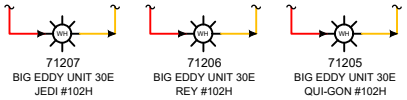


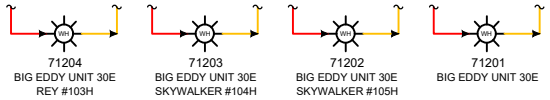


| BIG EDDY UNIT DI 30E - PAD 12 | | | | |
|---|---|---|---|---|
| NAME | API # | GAS LIFT METER # | LEASE ID # | CA/PA/LEASE ID # |
| BIG EDDIE UNIT 30E JEDI #102H | 30-015-46198 | DBBE0246G - FMP | 891000326X | PA TO BE SUBMITTED |
| BIG EDDY UNIT 30E REY #102H | 30-015-46244 | DBBE0305G - FMP | NM105823407 | PA NMNM105693911 |
| BIG EDDY UNIT 30E QUI GON #102H | 30-015-46199 | DBBE0323G - FMP | NM105823407 | PA NMNM105693911 |
| BIG EDDY UNIT 30E REY #103H | 30-015-48156 | DBBE0273G - FMP | 891000326S | PA NMNM105693911 |
| BIG EDDY UNIT 30E SKYWALKER #104H | 30-015-46937 | DBBE0324G - FMP | 891000326S | PA NMNM105693911 |
| BIG EDDY UNIT 30E SKYWALKER #105H | 30-015-46938 | DBBE0314G - FMP | 891000326S | PA NMNM105693911 |

| DRAWING ID | METER DESCRIPTION | TYPE | METER ID # | PURPOSE |
|---|---|---|---|---|
| GM1 | V-81200 TEST SEPARATOR | ORIFICE | DBBE0291G | ALLOCATION |
| GM2 | V-81201 TESTSEPARATOR | ORIFICE | DBBE0292G | ALLOCATION |
| GM3 | V-81202 TEST SEPARATOR | ORIFICE | DBBE0293G | ALLOCATION |
| GM4 | V-81203 TEST SEPARATOR | ORIFICE | DBBE0294G | ALLOCATION |
| GM5 | V-81204 TEST SEPARATOR - TRAIN #3 FMP | ORIFICE | DBBE0264G | SALES |
| OM1 | V-81200 TEST SEPARATOR | CORIOLIS | DBBE0291O | ALLOCATION |
| OM2 | V-81201 TEST SEPARATOR | CORIOLIS | DBBE0292O | ALLOCATION |
| OM3 | V-81202 TEST SEPARATOR | CORIOLIS | DBBE0293O | ALLOCATION |
| OM4 | V-81203 TEST SEPARATOR | CORIOLIS | DBBE0294O | ALLOCATION |
| OM5 | V-81204 TEST SEPARATOR | CORIOLIS | DBBE0264O | ALLOCATION |

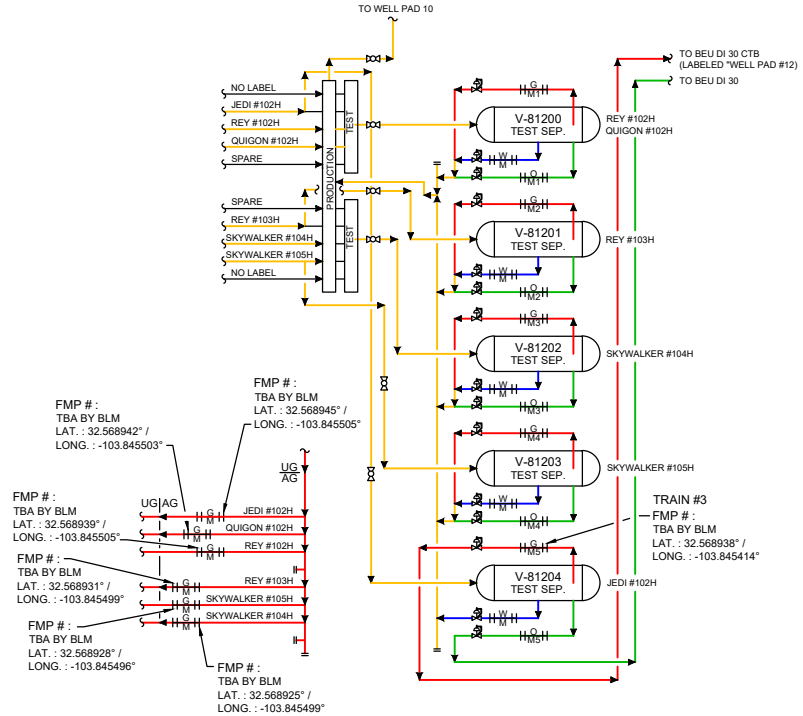


EMULSION
WATER
OIL
GAS

| Revision | Description of Change | Date | By | ENG. APPD. By |
|---|---|---|---|---|
| 0 | AS BUILT | 10/21/2020 | LAD | |
| 1 | ADDED TEST VESSELS | 6/27/2023 | CK | |
| 2 | AS BUILT / UPDATED | 6/25/2025 | SB/JLF | |
| 2C | ISSUED FOR COMMINGLE | 10/2/2025 | JLF | |

ExxonMobil

# BIG EDDY UNIT DI 30E PAD 12

WELL PAD #12 ROW F LAYOUT
EDDY COUNTY, NEW MEXICO

LAT.: 32.569107° / LONG.: -103.847641°
USA NMLC0063667 / SEC. 14-T20S-R31E, NWSW

SITE FACILITY DIAGRAM - SHEET 4 OF 5

FILE NO. BIG EDDY UNIT DI 30 CTB
REV. No. 2C

Released to Imaging: 12/23/2025 10:46:56 AM

Page 14 of 38

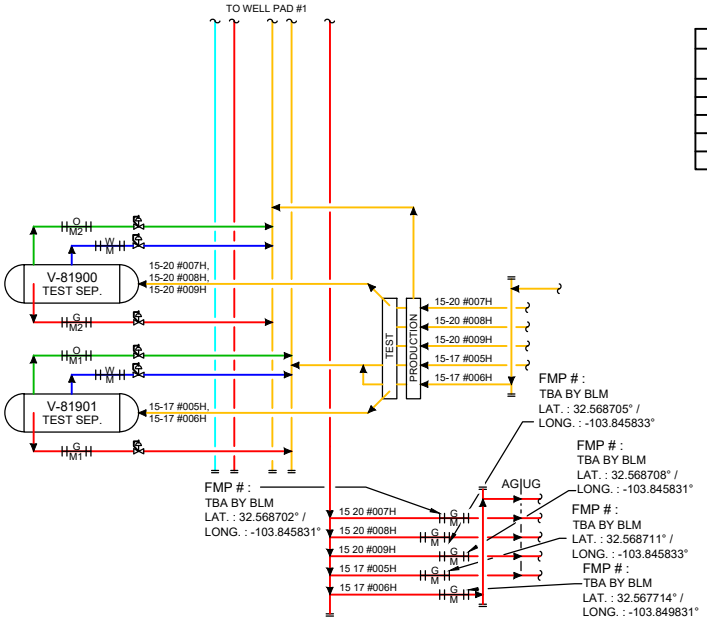


| BIG EDDY UNIT DI 30E - PAD 12 | | | | |
|---|---|---|---|---|
| NAME | API # | GAS LIFT METER # | LEASE ID # | CA/PA/LEASE ID # |
| BIG EDDY UNIT 30 WEST 15 17 #006H | 30-015-55794 | -- FMP | NMNM068294X | -- |
| BIG EDDY UNIT 30 WEST 15 20 #007H | 30-015-55795 | -- FMP | NMNM068294X | -- |
| BIG EDDY UNIT 30 WEST 15 20 #008H | 30-015-55743 | -- FMP | NMNM068294X | -- |
| BIG EDDY UNIT 30 WEST 15 20 #009H | 30-015-55744 | -- FMP | NMNM068294X | -- |
| BIG EDDY UNIT 30 WEST 15 17 #005H | 30-015-55848 | -- FMP | NMNM068294X | -- |

| DRAWING ID | METER DESCRIPTION | TYPE | METER ID # | PURPOSE |
|---|---|---|---|---|
| GM1 | V-81901 TEST SEPARATOR | ORIFICE | -- | ALLOCATION |
| GM2 | V-81900 TEST SEPARATOR | ORIFICE | -- | ALLOCATION |
| OM1 | V-81901 TEST SEPARATOR | CORIOLIS | -- | ALLOCATION |
| OM2 | V-81900 TEST SEPARATOR | CORIOLIS | -- | ALLOCATION |

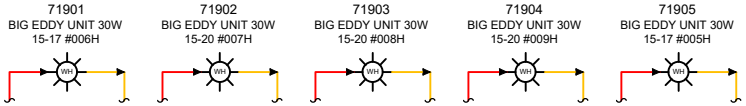


EMULSION
WATER
OIL
GAS
INSTR. AIR

| Revision | Description of Change | Date | By | ENG. APPD. By |
|---|---|---|---|---|
| 0 | ISSUED FOR COMMINGLE | 10/2/2025 | JLF | |

ExxonMobil

# BIG EDDY UNIT DI 30W PAD 19

WELL PAD #19 ROW J LAYOUT
EDDY COUNTY, NEW MEXICO

LAT.: 32.569107° / LONG.: -103.847641°
USA NMLC0063667 / SEC. 14-T20S-R31E, SESE

SITE FACILITY DIAGRAM - SHEET 5 OF 5

FILE NO. BIG EDDY UNIT DI 30 CTB
REV. No. 0

Received by OCD: 10/27/2025 2:49:37 PM
Released to Imaging: 12/23/2025 10:46:56 AM

October 15, 2025

**CERTIFIED MAIL**
**RETURN RECEIPT REQUESTED**

TO: ALL AFFECTED PARTIES

**Re: Application of XTO Permian Operating, LLC for administrative approval to surface commingle (lease) oil and gas production, off-lease storage and measure from leases comprised of Sections 15, 20, 21, and 22 Township 20 South, Range 31 East, NMPM, and participating area (PA) comprised of Sections 13, 14, 23, and 24; Eddy County, New Mexico.**

**Re: Application of XTO Permian Operating, LLC for administrative approval to surface commingle VRU-Flash gas[1] from participating areas and lease comprised of Sections 13, 14, 15, 16, 17, 20, 21, 22, 23 and 24 of Township 20 South, Range 31 East, Edd County, New Mexico (the "Lands")**

To Whom It May Concern:

Enclosed is a copy of the above-referenced application, which was filed with the New Mexico Oil Conservation Division on this date. Any objection to this application must be filed in writing within twenty (20) days from the date this application is received by the Division's Santa Fe office located at 1220 South St. Francis Drive, Santa Fe, New Mexico, 87505. If no objection is received within this twenty-day period, this application may be approved administratively by the Division.

If you have any questions about this application, please contact the following:

Russell Young
XTO Permian Operating, LLC
(832)302-5430
russell.young@exxonmobil.com

Sincerely,

Russell Young

Russell Young
New Mexico Commingle Manager
Permian Business Unit

XTO Permian Operating, LLC.
Russell Young
6401Holiday Hill Road, Bldg 5
Midland, TX 79707
832-302-5430
Russell.young@exxonmobil.com

| BEU DI 30 - POSTAL DELIVERY LIST | | | | |
|---|---|---|---|---|
| RECIEPT # | NAME | ADDRESS | ADDRESS | NOTIFICATION DATE |
| 9589 0710 5270 1533 1764 50 | SARGAR LLC | 101 S 4TH ST | ARTESIA NM 88210 | 10/16/2025 |
| 9589 0710 5270 1533 1764 67 | BRENDA KAY VINCENT | 10107 COUNTY ROAD 1150 | LOOKEBA OK 73053 | 10/16/2025 |
| 9589 0710 5270 1533 1761 15 | MARILYN MIMI RITCHEY | 10442 NAPOLI PL NW | ALBUQUERQUE NM 87114 | 10/16/2025 |
| 9589 0710 5270 1533 1761 22 | MATTHEW CARSON COTTINGHAM MILES | 111 SHERATON DR | SAN ANTONIO TX 78209 | 10/16/2025 |
| 9589 0710 5270 1533 1764 74 | JENNIE VUKSICH | 11401 SAN FRANCISCO RD NE | ALBUQUERQUE NM 87122 | 10/16/2025 |
| 9589 0710 5270 1533 1764 81 | JULIA TERRI WELCH | 11525 LINDSEY GARDEN DR | TYLER TX 75709 | 10/16/2025 |
| 9589 0710 5270 1533 1764 98 | SANDERS THOMAS WELCH | 129 WRANGLER RD | ROSWELL NM 88201 | 10/16/2025 |
| 9589 0710 5270 1533 1765 04 | WEST BEND ENERGY PARTNERS LLC | 1320 S UNIVERSITY DR SUITE 701 | FORT WORTH TX 76107 | 10/16/2025 |
| 9589 0710 5270 1533 1765 11 | ZELMA MARTHA HUBBARD REUTER | 13908 W OKC RENO ST | EL RENO OK 73036 | 10/16/2025 |
| 9589 0710 5270 1533 1765 28 | CHEVRON U.S.A. INC | 1400 SMITH STREET | HOUSTON TX 77002 | 10/16/2025 |
| 9589 0710 5270 1533 1765 35 | HARRY A. MILLER, III | 1402 FOXWOOD COVE | AUSTIN TX 78704 | 10/16/2025 |
| 9589 0710 5270 1533 1765 42 | JOE ALLISON BATES | 1407 NORTH CANAL ST | CARLSBAD NM 88220 | 10/16/2025 |
| 9589 0710 5270 1533 1765 59 | SIERRA ENERGY ROYALTIES, LLC | 16400 DALLAS PARKWAY, SUITE 400 | DALLAS TX 75248 | 10/16/2025 |
| 9589 0710 5270 1533 1765 66 | RACHELLE ARGYLE | 167369 7 MILE RD | MARLOW OK 73055 | 10/16/2025 |
| 9589 0710 5270 1533 1765 73 | LJA CHARITABLE INVESTMENTS, LLC | 1717 WEST LOOP SOUTH SUITE 180 | HOUSTON TX 77027 | 10/16/2025 |
| 9589 0710 5270 1533 1765 80 | CHARLES WILLIAM HIVELY | 17284 ROUND LAKE RD | EDEN PRAIRIE MN 55346 | 10/16/2025 |
| 9589 0710 5270 1533 1765 97 | BRYAN WINSTON WELCH | 1764 S PAIGE CREEK PL | TUCSON AZ 85748 | 10/16/2025 |
| 9589 0710 5270 1533 1766 03 | ROBERT KEITH LOVELACE & | 19887 HWY 33 | HAMMON OK 73650 | 10/16/2025 |
| 7019 1640 0001 6436 3771 (FROM 2020) | 2016 HYATT BASS FAM TR | 201 MAIN ST STE 2700 | FORT WORTH TX 76102 | 1/31/2020 |
| 7019 1640 0001 6436 3771 (FROM 2020) | 2016 SAMANTHA BASS FAM TR | 201 MAIN ST STE 2700 | FORT WORTH TX 76102 | 1/31/2020 |
| 7019 1640 0001 6436 3771 (FROM 2020) | CHRISTOPHER MADDOX BASS | 201 MAIN ST STE 2750 | FORT WORTH TX 76102 | 1/31/2020 |
| 7019 1640 0001 6436 3771 (FROM 2020) | THE BASS SICKEL 2016 CHILDRENS TR | 201 MAIN STREET SUITE 2300 | FORT WORTH TX 76102 | 1/31/2020 |
| 7019 1640 0001 6436 3771 (FROM 2020) | 2016 SAMANTHA BASS FAMILY TRUST | 201 MAIN STREET SUITE 2700 | FORT WORTH TX 76102 | 1/31/2020 |
| 7019 1640 0001 6436 3771 (FROM 2020) | 2016 HYATT BASS FAMILY TRUST | 201 MAIN STREET SUITE 2700 | FORT WORTH TX 76102 | 1/31/2020 |
| 7019 1640 0001 6436 3771 (FROM 2020) | ANNE CHANDLER BASS EVANS | 201 MAIN STREET SUITE 2700 | FORT WORTH TX 76102 | 1/31/2020 |
| 7019 1640 0001 6436 3771 (FROM 2020) | BMT I BPEOR NM, LLC | 201 MAIN STREET SUITE 2700 | FORT WORTH TX 76102 | 1/31/2020 |
| 7019 1640 0001 6436 3771 (FROM 2020) | BMT II BPEOR NM, LLC | 201 MAIN STREET SUITE 2700 | FORT WORTH TX 76102 | 1/31/2020 |
| 7019 1640 0001 6436 3771 (FROM 2020) | CTAM O AND GAS LLC | 201 MAIN STREET SUITE 2700 | FORT WORTH TX 76102 | 1/31/2020 |
| 7019 1640 0001 6436 3771 (FROM 2020) | CTV-CTAM BPEOR NM, LLC | 201 MAIN STREET SUITE 2700 | FORT WORTH TX 76102 | 1/31/2020 |
| 7019 1640 0001 6436 3771 (FROM 2020) | CTV-LMB I BPEOR NM, LLC | 201 MAIN STREET SUITE 2700 | FORT WORTH TX 76102 | 1/31/2020 |
| 7019 1640 0001 6436 3771 (FROM 2020) | CTV-LMB II BPEOR NM, LLC | 201 MAIN STREET SUITE 2700 | FORT WORTH TX 76102 | 1/31/2020 |
| 7019 1640 0001 6436 3771 (FROM 2020) | CTV-SRB I BPEOR NM, LLC | 201 MAIN STREET SUITE 2700 | FORT WORTH TX 76102 | 1/31/2020 |
| 7019 1640 0001 6436 3771 (FROM 2020) | CTV-SRB I BPEOR NM, LLC | 201 MAIN STREET SUITE 2700 | FORT WORTH TX 76102 | 1/31/2020 |
| 7019 1640 0001 6436 3771 (FROM 2020) | CTV-SRB II BPEOR NM, LLC | 201 MAIN STREET SUITE 2700 | FORT WORTH TX 76102 | 1/31/2020 |
| 7019 1640 0001 6436 3771 (FROM 2020) | CTV-SRB II BPEOR NM, LLC | 201 MAIN STREET SUITE 2700 | FORT WORTH TX 76102 | 1/31/2020 |
| 7019 1640 0001 6436 3771 (FROM 2020) | GC OIL AND GAS LLC | 201 MAIN STREET SUITE 2700 | FORT WORTH TX 76102 | 1/31/2020 |
| 7019 1640 0001 6436 3771 (FROM 2020) | Goliad-LMB I BPEOR NM, LLC | 201 MAIN STREET SUITE 2700 | FORT WORTH TX 76102 | 1/31/2020 |
| 7019 1640 0001 6436 3771 (FROM 2020) | Goliad-LMB II BPEOR NM, LLC | 201 MAIN STREET SUITE 2700 | FORT WORTH TX 76102 | 1/31/2020 |
| 7019 1640 0001 6436 3771 (FROM 2020) | Goliad-SRB I BPEOR NM, LLC | 201 MAIN STREET SUITE 2700 | FORT WORTH TX 76102 | 1/31/2020 |
| 7019 1640 0001 6436 3771 (FROM 2020) | Goliad-SRB II BPEOR NM, LLC | 201 MAIN STREET SUITE 2700 | FORT WORTH TX 76102 | 1/31/2020 |
| 7019 1640 0001 6436 3771 (FROM 2020) | KEYSTONE (CTAM) BPEOR NM, LLC | 201 MAIN STREET SUITE 2700 | FORT WORTH TX 76102 | 1/31/2020 |
| 7019 1640 0001 6436 3771 (FROM 2020) | KEYSTONE (RMB) BPEOR NM, LLC | 201 MAIN STREET SUITE 2700 | FORT WORTH TX 76102 | 1/31/2020 |
| 7019 1640 0001 6436 3771 (FROM 2020) | LMB I BPEOR NM, LLC | 201 MAIN STREET SUITE 2700 | FORT WORTH TX 76102 | 1/31/2020 |
| 7019 1640 0001 6436 3771 (FROM 2020) | LMB II BPEOR NM, LLC | 201 MAIN STREET SUITE 2700 | FORT WORTH TX 76102 | 1/31/2020 |

| | | | | |
|---|---|---|---|---|
| 7019 1640 0001 6436 3771 (FROM 2020) | LMB RSB GST EXEMPT DYNASTY 2016 TR | 201 MAIN STREET SUITE 2700 | FORT WORTH TX 76102 | 1/31/2020 |
| 7019 1640 0001 6436 3771 (FROM 2020) | LMB RSB NON EXEMPT 2016 TRUST | 201 MAIN STREET SUITE 2700 | FORT WORTH TX 76102 | 1/31/2020 |
| 7019 1640 0001 6436 3771 (FROM 2020) | LMB/RSB GST EXEMPT DYNASTY 2016 TR | 201 MAIN STREET SUITE 2700 | FORT WORTH TX 76102 | 1/31/2020 |
| 7019 1640 0001 6436 3771 (FROM 2020) | SRB I BPEOR NM, LLC | 201 MAIN STREET SUITE 2700 | FORT WORTH TX 76102 | 1/31/2020 |
| 7019 1640 0001 6436 3771 (FROM 2020) | SRB II BPEOR NM, LLC | 201 MAIN STREET SUITE 2700 | FORT WORTH TX 76102 | 1/31/2020 |
| 7019 1640 0001 6436 3771 (FROM 2020) | THE PHILECOLOGY FOUNDATION | 201 MAIN STREET SUITE 2700 | FORT WORTH TX 76102 | 1/31/2020 |
| 7019 1640 0001 6436 3771 (FROM 2020) | THRU LINE BPEOR NM, LLC | 201 MAIN STREET SUITE 2700 | FORT WORTH TX 76102 | 1/31/2020 |
| 7019 1640 0001 6436 3771 (FROM 2020) | TIMOTHY RICHARDSON BASS | 201 MAIN STREET SUITE 2700 | FORT WORTH TX 76102 | 1/31/2020 |
| 7019 1640 0001 6436 3771 (FROM 2020) | WD I BPEOR NM, LLC | 201 MAIN STREET SUITE 2700 | FORT WORTH TX 76102 | 1/31/2020 |
| 7019 1640 0001 6436 3771 (FROM 2020) | WD II BPEOR NM, LLC | 201 MAIN STREET SUITE 2700 | FORT WORTH TX 76102 | 1/31/2020 |
| 9589 0710 5270 1533 1766 10 | ELLEN MARION SKYLARK | 20350 MARSH CREEK RD | BRENTWOOD CA 94513 | 10/16/2025 |
| 9589 0710 5270 1533 1766 27 | WING RESOURCES III, LLC | 2100 MCKINNEY AVE., SUITE 1540 | DALLAS TX 75201 | 10/16/2025 |
| 9589 0710 5270 1533 1766 34 | WING RESOURCES IV, LLC | 2100 MCKINNEY AVE., SUITE 1540 | DALLAS TX 75201 | 10/16/2025 |
| 9589 0710 5270 1533 1766 41 | WING RESOURCES VI, LLC | 2100 MCKINNEY AVE., SUITE 1540 | DALLAS TX 75201 | 10/16/2025 |
| 9589 0710 5270 1533 1766 58 | WING RESOURCES VII, LLC | 2100 MCKINNEY AVE., SUITE 1540 | DALLAS TX 75201 | 10/16/2025 |
| 9589 0710 5270 1533 1766 65 | ELK RANGE ROYALTIES II, LP | 2110 FARRINGTON STREET | DALLAS TX 75207 | 10/16/2025 |
| 9589 0710 5270 1533 1766 72 | XTO HOLDINGS LLC-RU5737 | 22777 SPRINGWOODS VILLAGE PKWA | SPRING TX 77389 | 10/16/2025 |
| 9589 0710 5270 1533 1766 89 | XTO DELAWARE BASIN LLC-RU5766 | 22777 SPRINGWOODS VILLAGE PKWY | SPRING TX 77389 | 10/16/2025 |
| 9589 0710 5270 1533 1766 96 | BRANDY M ROBERTS | 2501 LAKEWOOD DR | CHICKASHA OK 73018 | 10/16/2025 |
| 9589 0710 5270 1533 1767 02 | PERPETUAL RESOURCE ASSETS, LLC | 2527 FAIRMONT STREET | DALLAS TX 75201 | 10/16/2025 |
| 9589 0710 5270 1533 1767 19 | PALAMAR ENTERPRISES LLC | 2655 BECKY AVE | MINDEN NV 89423 | 10/16/2025 |
| 9589 0710 5270 1533 1767 26 | WALLACE W IRWIN PROPERTIES LLC | 270 VILLAGE DRIVE APT 1427 | DOWNERS GROVE IL 60516 | 10/16/2025 |
| 9589 0710 5270 1533 1767 33 | ARICKA L GREEN | 2714 COUNTY ST 2831 | CHICKASHA OK 73018 | 10/16/2025 |
| 9589 0710 5270 1533 1767 40 | DANNY ALLEN BARRETT | 291 OAK ARBOR LN | COLDSPRING TX 77331 | 10/16/2025 |
| 9589 0710 5270 1533 1767 57 | MICHAEL IRVIN WELCH, JR. | 2912 138TH ST | LUBBOCK TX 79423 | 10/16/2025 |
| 9589 0710 5270 1533 1767 64 | NEW MEXICO COMMISSIONER OF PUBLIC LANDS - NM State Land Office | 310 OLD SANTA FE TRAIL | SANTA FE 87501 | 10/16/2025 |
| 9589 0710 5270 1533 1767 71 | IMPERIAL MINERALS, LLC | 3100 QUAIL CREEK ROAD | OKLAHOMA CITY OK 73120 | 10/16/2025 |
| 9589 0710 5270 1533 1767 88 | JOHN DREW MILLER | 340 E PARK DR | KELLOGG ID 83837 | 10/16/2025 |
| 9589 0710 5270 1533 1767 95 | ICON MINERALS LLC | 3515 DURNESS WAY | HOUSTON TX 77025 | 10/16/2025 |
| 9589 0710 5270 1533 1768 01 | TRAVIS KELLY MELLARD | 3620 JOSH LN | AUSTIN TX 78730 | 10/16/2025 |
| 9589 0710 5270 1533 1768 18 | MSH FAMILY REAL ESTATE PARTNERSHIP II, LLC | 4143 MAPLE AVENUE, SUITE 500 | DALLAS TX 75201 | 10/16/2025 |
| 9589 0710 5270 1533 1768 25 | SMP SIDECAR TITAN MINERAL HOLDINGS, LP | 4143 MAPLE AVENUE, SUITE 500 | DALLAS TX 75201 | 10/16/2025 |
| 9589 0710 5270 1533 1768 32 | SMP TITAN FLEX, LP | 4143 MAPLE AVENUE, SUITE 500 | DALLAS TX 75201 | 10/16/2025 |
| 9589 0710 5270 1533 1768 49 | SMP TITAN MINERAL HOLDING, LP | 4143 MAPLE AVENUE, SUITE 500 | DALLAS TX 75201 | 10/16/2025 |
| 9589 0710 5270 1533 1768 56 | SARA ARN | 4308 S HASSETT | MESA AZ 85212 | 10/16/2025 |
| 9589 0710 5270 1533 1768 63 | ROGER KENT HALDEMAN | 5 HERITAGE RD | EDGEWOOD NM 87015 | 10/16/2025 |
| 9589 0710 5270 1533 1768 70 | LEA ANNE C KOCH | 500 MILL CREEK CT | ROSEVILLE CA 95747 | 10/16/2025 |
| 9589 0710 5270 1533 1768 87 | SLASH EXPLORATION LIMITED PARTNERSHIP | 500 NORTH MAIN, SUITE 200 | ROSWELL NM 88201 | 10/16/2025 |
| 9589 0710 5270 1533 1768 94 | COG OPERATING, LLC | 600 W. ILLINOIS AVE. | MIDLAND TX 79701 | 10/16/2025 |
| 9589 0710 5270 1533 1769 00 | CONCHO OIL & GAS, LLC | 600 W. ILLINOIS AVE. | MIDLAND TX 79701 | 10/16/2025 |

| | | | | |
|---|---|---|---|---|
| 9589 0710 5270 1533 1769 17 | MARATHON OIL PERMIAN, LLC | 600 W. ILLINOIS AVE. | MIDLAND TX 79701 | 10/16/2025 |
| 9589 0710 5270 1533 1769 24 | PHILLIPS PETROLEUM COMPANY | 600 W. ILLINOIS AVE. | MIDLAND TX 79701 | 10/16/2025 |
| 9589 0710 5270 1533 1769 31 | MAGNUM HUNTER PRODUCTION, INC. | 6001 DEAUVILLE BLVD., SUITE N.3.047 | MIDLAND TX 79706 | 10/16/2025 |
| 9589 0710 5270 1533 1769 48 | BUREAU OF LAND MANAGEMENT ATTN: JONATHAN SHEPARD | 620 E GREENE ST. | CARLSBAD NM 88220 | 10/16/2025 |
| 9589 0710 5270 1533 1769 55 | EMMA LOU HARDIN | 740405 S 3350 RD | PERKINS OK 74059 | 10/16/2025 |
| 9589 0710 5270 1533 1769 62 | GEORGETTE C. NICHOLS | 770 BOYLSTON STREET | BOSTON MA 12199 | 10/16/2025 |
| 9589 0710 5270 1533 1769 79 | MMS BRENHAM FEDERAL | 810 HOUSTON STREET | FORT WORTH TX 76102 | 10/16/2025 |
| 9589 0710 5270 1533 1769 86 | MARGARET DELL BRIDGES | 8130 CEDEL DRIVE | HOUSTON TX 77055 | 10/16/2025 |
| 9589 0710 5270 1533 1769 93 | MELANIE MILES WALTERS | 8815 TOWANA TRL | AUSTIN TX 78736 | 10/16/2025 |
| 9589 0710 5270 1533 1770 06 | MARGARET ANNE MILLER CARRICO | C/O PLAINS CAPITAL BANK 2705 BEE CAVES ROAD | AUSTIN TX 78745 | 10/16/2025 |
| 9589 0710 5270 1533 1770 13 | SHOW GOAT CAPITAL, L.P. | P.O. BOX 50576 | AUSTIN TX 78763 | 10/16/2025 |
| 9589 0710 5270 1533 1770 20 | CLAIRE ANN IVERSON REV LIV TR | PO BOX 10508 | MIDLAND TX 797602 | 10/16/2025 |
| 9589 0710 5270 1533 1770 37 | EGP REVOCABLE LIVING TRUST | PO BOX 10508 | MIDLAND TX 797602 | 10/16/2025 |
| 9589 0710 5270 1533 1770 44 | KIP REVOCABLE LIVING TRUST | PO BOX 10508 | MIDLAND TX 797602 | 10/16/2025 |
| 9589 0710 5270 1533 1770 51 | SIEGFRIED JAMES IVERSON III REV LIV TR | PO BOX 10508 | MIDLAND TX 797602 | 10/16/2025 |
| 9589 0710 5270 1533 1770 68 | TIG PROPERTIES LP | PO BOX 10508 | MIDLAND TX 797602 | 10/16/2025 |
| 9589 0710 5270 1533 1770 75 | PERMIAN BASIN GIF I LLC | PO BOX 131239 | SPRING TX 77393 | 10/16/2025 |
| 9589 0710 5270 1533 1770 82 | TAURUS ROYALTY LLC | PO BOX 1477 | LITTLE ELM TX 75068 | 10/16/2025 |
| 9589 0710 5270 1533 1770 99 | BECKY R COOPER | PO BOX 1482 | SONOITA AZ 846377 | 10/16/2025 |
| 9589 0710 5270 1533 1771 05 | DIANE M FARRELL | PO BOX 1600 | SAN ANTONIO TX 78296 | 10/16/2025 |
| 9589 0710 5270 1533 1771 12 | WILLIAM L FARRELL | PO BOX 1600 | SAN ANTONIO TX 78296 | 10/16/2025 |
| 9589 0710 5270 1533 1771 29 | STACY ANN WELCH GREEN | PO BOX 164 | SONOITA AZ 846377 | 10/16/2025 |
| 9589 0710 5270 1533 1771 36 | COLBURN OIL LP | PO BOX 2524 | MIDLAND TX 79702 | 10/16/2025 |
| 9589 0710 5270 1533 1771 43 | CULBERTSON MANAGEMENT TRUST | PO BOX 2918 | MIDLAND TX 79702 | 10/16/2025 |
| 9589 0710 5270 1533 1771 50 | PENASCO PETROLEUM LLC | PO BOX 4168 | ROSWELL NM 88202 | 10/16/2025 |
| 9589 0710 5270 1533 1771 67 | PEGASUS RESOURCES III NM CORPORATION | PO BOX 470698 | FORT WORTH TX 76147 | 10/16/2025 |
| 9589 0710 5270 1533 1771 74 | MCMULLEN MINERALS II LP | PO BOX 470857 | FORT WORTH TX 76147 | 10/16/2025 |
| 9589 0710 5270 1533 1771 81 | MCMULLEN MINERALS LLC | PO BOX 470857 | FORT WORTH TX 76147 | 10/16/2025 |
| 9589 0710 5270 1533 1771 98 | GEORGE RYAN INGRAM | PO BOX 512 | CHICKASHA OK 73023 | 10/16/2025 |
| 9589 0710 5270 1533 1772 04 | PEGASUS RESOURCES LLC | PO BOX 733980 | DALLAS TX 75373 | 10/16/2025 |
| 9589 0710 5270 1533 1772 11 | SHARBRO ENERGY LLC | PO BOX 840 | ARTESIA NM 88211 | 10/16/2025 |
| 9589 0710 5270 1533 1772 28 | EOG RESOURCES INC | PO BOX 840321 | DALLAS TX 75284 | 10/16/2025 |
| 9589 0710 5270 1533 1772 35 | JOHN A HOLMSTROM 2004 TR | PO BOX 90727 | PASADENA CA 91109 | 10/16/2025 |
| 9589 0710 5270 1533 1772 42 | KANSAS UNIVERSITY ENDOWMENT | PO BOX 928 | LAWRENCE KS 66044 | 10/16/2025 |
| N/A | HOMER NELSON HUBBARD | UNKNOWN | UNKNOWN DE 19801 | N/A |
| N/A | JOSEPH W FLETCHER AND WIFE, BESSIE L. FLETCHER | UNKNOWN | DELAWARE DE 19801 | N/A |
| N/A | R J HUBBARD | UNKNOWN | UNKNOWN DE 19801 | N/A |
| N/A | ROBERT E. ANDERSON AND WIFE, GLENDA RAE ANERSON | UNKNOWN | UNKNOWN DE 19801 | N/A |

# Affidavit of Publication

No. 68210

State of New Mexico Publisher

County of Eddy:

**Adrian Hedden**

being duly sworn, sayes that he is the **Publisher**

of the Carlsbad Current Argus, a weekly newspaper of general circulation, published in English at Carlsbad, said county and state, and that the hereto attached

**Legal Ad**

was published in a regular and entire issue of the said Carlsbad Current Argus, a weekly newspaper duly qualified for that purpose within the meaning of Chapter 167 of the 1937 Session Laws of the state of New Mexico for

1 Consecutive weeks/day on the same day as follows:

First Publication October 21, 2025

Second Publication

Third Publication

Fourth Publication

Fifth Publication

Sixth Publication

Seventh Publication

Eighth Publication

Subscribed ans sworn before me this

23rd day of October 2025

LATISHA ROMINE
Notary Public, State of New Mexico
Commission No. 1076338
My Commission Expires
05-12-2027

Latisha Romine

Latisha Romine

Notary Public, Eddy County, New Mexico

# Copy of Publication:

TO: ALL AFFECTED PARTIES, INCLUDING: SARGAR LLC BRENDA KAY VINCENT MARILYN MIMI RITCHEY MATTHEW CARSON COTTINGHAM MILES JENNIE VUKSICH JULIA TERRI WELCH SANDERS THOMAS WELCH WEST BEND ENERGY PARTNERS LLC ZELMA MARTHA HUBBARD REUTER CHEVRON U.S.A. INC HARRY A. MILLER, III JOE ALLISON BATES SIERRA ENERGY ROYALTIES, LLC RACHELLE ARGYLE LJA CHARITABLE INVESTMENTS, LLC CHARLES WILLIAM HIVELY BRYAN WINSTON WELCH ROBERT KEITH LOVELACE & 2016 HYATT BASS FAM TR 2016 SAMANTHA BASS FAM TR CHRISTOPHER MADDOX BASS THE BASS SICKEL 2016 CHILDRENS TR 2016 SAMANTHA BASS FAMILY TRUST 2016 HYATT BASS FAMILY TRUST ANNE CHANDLER BASS EVANS BMT I BPEOR NM, LLC BMT II BPEOR NM, LLC CTAM O AND GAS LLC CTV-CTAM BPEOR NM, LLC CTV-LMB I BPEOR NM, LLC CTV-LMB II BPEOR NM, LLC CTV-SRB I BPEOR NM, LLC CTV-SRB I BPEOR NM, LLC CTV-SRB II BPEOR NM, LLC CTV-SRB II BPEOR NM, LLC GC OIL AND GAS LLC Goliad-LMB I BPEOR NM, LLC Goliad-LMB II BPEOR NM, LLC Goliad-SRB I BPEOR NM, LLC Goliad-SRB II BPEOR NM, LLC KEYSTONE (CTAM) BPEOR NM, LLC KEYSTONE (RMB) BPEOR NM, LLC LMB I BPEOR NM, LLC LMB II BPEOR NM, LLC LMB RSB GST EXEMPT DYNASTY 2016 TR LMB RSB NON EXEMPT 2016 TRUST LMB/RSB GST EXEMPT DYNASTY 2016 TRN SRB I BPEOR NM, LLC SRB II BPEOR NM, LLC THE PHILECOLOGY FOUNDATION THRU LINE BPEOR NM, LLC TIMOTHY RICHARDSON BASS WD I BPEOR NM, LLC WD II BPEOR NM, LLC ELLEN MARION SKYLARK WING RESOURCES III, LLC WING RESOURCES IV, LLC WING RESOURCES VI, LLC WING RESOURCES VII, LLC ELK RANGE ROYALTIES II, LP XTO HOLDINGS LLC-RU5737 XTO DELAWARE BASIN LLC-RU5766 BRANDY M ROBERTS PERPETUAL RESOURCE ASSETS, LLC PALAMAR ENTERPRISES LLC WALLACE W IRWIN PROPERTIES LLC ARICKA L GREEN DANNY ALLEN BARRETT MICHAEL IRVIN WELCH, JR. "NEW MEXICO COMMISSIONER OF PUBLIC LANDS - NM State Land Office" IMPERIAL MINERALS, LLC JOHN DREW MILLER ICON MINERALS LLC TRAVIS KELLY MELLARD MSH FAMILY REAL ESTATE PARTNERSHIP II, LLC SMP SIDECAR TITAN MINERAL HOLDINGS, LP SMP TITAN FLEX, LP SMP TITAN MINERAL HOLDING, LP SARA ARN ROGER KENT HALDEMAN LEA ANNE C KOCH SLASH EXPLORATION LIMITED PARTNERSHIP COG OPERATING, LLC CONCHO OIL & GAS, LLC MARATHON OIL PERMIAN, LLC PHILLIPS PETROLEUM COMPANY MAGNUM HUNTER PRODUCTION, INC. BUREAU OF LAND MANAGEMENT ATTN: JONATHAN SHEPARD EMMA LOU HARDIN GEORGETTE C. NICHOLS MMS BRENHAM FEDERAL MARGARET DELL BRIDGES MELANIE MILES WALTERS MARGARET ANNE MILLER CARRICO =SHOW GOAT CAPITAL, L.P. CLAIRE ANN IVERSON REV LIV TR EGP REVOCABLE LIVING TRUST KIP REVOCABLE LIVING TRUST SIEGFRIED JAMES IVERSON III REV LIV TR TIG PROPERTIES LP PERMIAN BASIN GIF I LLC TAURUS ROYALTY LLC BECKY R COOPER DIANE M FARRELL WILLIAM L FARRELL STACY ANN WELCH GREEN COLBURN OIL LP CULBERTSON MANAGEMENT TRUST PENASCO PETROLEUM LLC PEGASUS RESOURCES III NM CORPORATION MCMULLEN MINERALS II LP MCMULLEN MINERALS LLC GEORGE RYAN INGRAM PEGASUS RESOURCES LLC SHARBRO ENERGY LLC EOG RESOURCES INC JOHN A HOLMSTROM 2004 TR KANSAS UNIVERSITY ENDOWMENT

**Application of XTO Permian Operating, LLC for administrative approval to surface commingle (lease) oil and gas production, off-lease storage and measure from leases comprised of Sections 15, 20, 21, and 22 Township 20 South, Range 31 East, NMPM, and participating area (PA) comprised of Sections 13, 14, 23, and 24; Eddy County, New Mexico.**

**Application of XTO Permian Operating, LLC for administrative approval to surface commingle VRU-Flash gas[1] from participating areas and lease comprised of Sections 13, 14, 15, 16, 17, 20, 21, 22, 23 and 24 of Township 20 South, Range 31 East, Eddy County, New Mexico (the "Lands")**

XTO Permian Operating, LLC (OGRID No. 373075) ("XTO"), pursuant to 19.15.12.10 NMAC, seeks administrative approval to surface commingle (off lease) diversely owned oil and gas production at the Big Eddy Unit DI 30 Central Tank Battery ("CTB") insofar as all existing and future wells drilled in the following spacing units:

(a) The 9,355.64-acre, of participating area (PA) comprised of Section 13: All; Section 14: All; Section 22: S2SE; Section 23: All; Section 24: All; Section 25: All; Section 26: All; Section 27: E2; Township 22 South, Range 31 East Section 17: ALL; Section 18: Lots 1,2,3,4, E2W2, E2; Section 19: Lots 1,2,3,4, E2W2, E2; Section 20: All; Section 21: All; Section 28: All; Section 29: All; Section 30: Lots 1,2,3,4, E2W2, E2, Township 22 South, Range 32 East, in the [97650] **WC WILLIAMS SINK; BONE SPRING** currently dedicated to the following well:

| | | |
|---|---|---|
| 30-015-46199 | BIG EDDY UNIT 30E QUI GON | 102H |
| 30-015-48159 | BIG EDDY UNIT 30E QUI-GON | 103H |
| 30-015-46244 | BIG EDDY UNIT 30 REY | 102H |
| 30-015-48156 | BIG EDDY UNIT 30E REY | 103H |
| 30-015-46194 | BIG EDDY UNIT 30E SKYWALKER | 100H |
| 30-015-46195 | BIG EDDY UNIT 30E SKYWALKER | 101H |
| 30-015-46933 | BIG EDDY UNIT 30E SKYWALKER | 102H |
| 30-015-46935 | BIG EDDY UNIT 30E SKYWALKER | 103H |
| 30-015-46937 | BIG EDDY UNIT 30E SKYWALKER | 104H |
| 30-015-46938 | BIG EDDY UNIT 30E SKYWALKER | 105H |

(b) The **160.00-acre** of Lease **NMLC0065944** comprised of Section 22: W2NE, W2NW; the 160.00-acre of Lease **NMLC0065944A** comprised of Section 22: E2NE, E2NW; the 320.00- acre of Lease **NMLC 0001083** comprised of Section 20: N2; the 240.00-acre of Lease **NMLC 0004082** comprised of Section 21: W2NE, NW4; the 80.00-acre of Lease **NMLC 0065874A** comprised of Section 21: E2NE Township 20 South, Range 31 East, in the [97650] **WC WILLIAMS SINK; BONE SPRING** currently dedicated to the following well:

| | | |
|---|---|---|
| 30-015-55795 | BIG EDDY UNIT DI 30 WEST 15 20 | 007H |
| 30-015-55743 | BIG EDDY UNIT DI 30 WEST 15 20 | 008H |
| 30-015-55744 | BIG EDDY UNIT DI 30 WEST 15 20 | 009H |

(c) The **40.00-acre** of State Lease **B1-0621-0001** comprised of Section 16: SENE; the **360.00- acre** of State Lease **E0-0264-0007** comprised of Section 16: SE/4; N2NE; SWNE; E2NW; the **240.00-acre** of State Lease **E0-5230-0007** comprised of Section 16: SW/4; W2NW; the **480.00-acre** of Lease **NMNM 0063667** comprised of Section 15: E2; E2W2; the **480.00-acre** of Lease **NMNM 0004082** comprised of Section 17: E2; E2W2; the 320.00-acre of Lease NMLC 0070220 comprised of Section 17: W2W2; and comprised of Section 15: W2W2; Township 20 South, Range 31 East, in the [97650] **WC WILLIAMS SINK; BONE SPRING** currently dedicated to the following well:

| | | |
|---|---|---|
| 30-015-55791 | BIG EDDY UNIT DI 30 WEST 15 17 | 001H |
| 30-015-55792 | BIG EDDY UNIT DI 30 WEST 15 17 | 002H |
| 30-015-55796 | BIG EDDY UNIT DI 30 WEST 15 17 | 003H |
| 30-015-55793 | BIG EDDY UNIT DI 30 WEST 15 17 | 004H |
| 30-015-55848 | BIG EDDY UNIT DI 30 WEST 15 17 | 005H |
| 30-015-55794 | BIG EDDY UNIT DI 30 WEST 15 17 | 006H |

(d) Pursuant to 19.15.12.10.C(4)(g), from all future additions of pools, leases or leases and pools to the Big Eddy Unit DI 30 Central Tank Battery with notice provided only to the owners of interests to be added.

Any objection to this application must be filed in writing within twenty (20) days from the date of publication with the New Mexico Oil Conservation Division, 1220 South St. Francis Drive, Santa Fe, New Mexico, 87505. If no objection is received within this twenty-day period, this application may be approved administratively by the Division. If you have any questions about this application, please contact Russell Young, XTO Energy, Inc., (832)-454-2857or Russell.young@exxonmobil.com.
68210-Published in Carlsbad Current Argus Oct. 21, 2025.

**Facility Process Flow and Measurement**

The production from each well will flow from its respective surface hole location through a flowline to an inlet header on the wellpad facility. The layout of the Facility is shown on the included Site Flow Diagram (SFD). The inlet header directs the well production into either a test separator or bulk (common) production separator. If a well is not directed to the test separator, the flow is directed into the bulk production separator.

The test separator is a horizontal vessel where the gas, oil, and water are separated and measured. The test separator has been designed to handle the Initial Production (IP) Rates of the wells and accurately measure the fluids. The gas flow is measured using an orifice meter following API Standard MPMS 14.3.2 and the flow is calculated using an electronic flow meter (EFM). The oil flow is measured using a Coriolis flow meter following the API Standard MPMS 5.6. The water flow is measured using a mag meter. One well can be tested every day. Well test by separating and metering the oil production from the well for either (a) a minimum of twenty-four (24) consecutive hours; or (b) a combination of nonconsecutive periods that meet the following conditions: (i) each period shall be a minimum of six (6) hours; and (ii) the total duration of the nonconsecutive periods shall be a minimum of eighteen (18) hours. The Well Test Method used follows the American Petroleum Institute's Manual of Petroleum Measurement Standards, Chapter 20 (API MPMS 20.1) and meets BLM, state, and federal regulations.

After separation at the wellpad, the gas from the test and bulk separators is recombined into a shared gas line. This gas is measured going to the FMP/Sales meter utilizing an orifice meter and the flow is calculated using an electronic flow meter (EFM). The gas meter is the gas FMP/Sales for the wellpad facility and complies with the calibration requirements specified in 43 CFR 3175.

After separation, the oil from the test and bulk separators are combined into a shared line routed to a horizontal heater treater where heat is added to meet RVP requirements. From the heater treater the oil is routed to a Vapor Recovery Tower (VRT) and then transferred into the oil pipeline using a LACT unit. The LACT unit has a Coriolis flow meter that will be used as the FMP/Sales. The LACT unit Coriolis meter follows the proving requirements specified in 43 CFR 3174. The FMP/ Sales for the oil is located at the battery facility.

After separation, the water from the test and bulk separators is recombined into a shared line routed to a Surge (Skim) Vessel. The Surge vessel separates any remain gas and oil from the water. The water is pumped into the SWD system pipeline after being measured with a mag meter. The gas is recovered using compression and sent to the gas sales line. The skim oil is recovered and pumped back to the heater treater.

**Reservoir Forecasted Declines**

These wells may produce high volumes for a short three-month period and are then expected to decline for the remaining life of each well. After the initial period of hyperbolic decline, production stabilizes at a more predictable exponential decline rate.

**Production and Allocation**

Based on the decline rates, the wells will be tested at differing frequencies for optimum accuracy. Based on the production decline, the following three periods will be used to determine well test frequency:

- Range 1 – Initial Production Period – from the first production until the earlier of either the peak production rate or thirty (30) days after the first production; minimum 10 well tests/per month
- Range 2 – Plateau Period – the end of the initial production period to the peak decline rate; minimum 3 well tests/per month
- Range 3 – Decline Period – the end of plateau period until will is plugged and abandoned; minimum 3 well tests/ per month when the decline rate is >22% per month, 2 well tests/per month when the decline rate is between 22%-10% per month, and 1 well test/per month when the decline rate is <10% per month

Gas and oil production will then be allocated daily based on the most recent individual well tests of oil, gas, and water.

All the Test Data is collected into our Production Accounting System for Allocation. The allocation methodology is shown specifically in the attached spreadsheet. The time increment for reported sales through the FMP/Sales custody transfer meters is monthly.

Pursuant to Statewide rule 19.15.12.10(C)(4)(g) XTO requests the option to include all future wells drilled in these pools and leases to this commingle order.

**Commingle approval will allow XTO to efficiently and effectively market production from the subject acreage.**

Tracking Number:
9589071052701533176450
Copy Add to Informed Delivery

**Latest Update**
Your item was delivered to an individual at the address at 9:27 am on October 22, 2025 in ARTESIA, NM 88210.

**Delivered**
**Delivered, Left with Individual**
ARTESIA, NM 88210
October 22, 2025, 9:27 am
See All Tracking History
What Do USPS Tracking Statuses Mean?

Get More Out of USPS Tracking:
USPS Tracking Plus®

Text & Email Updates

USPS Tracking Plus®

Product Information

See Less

Tracking Number:
9589071052701533176467
Copy Add to Informed Delivery

**Latest Update**
Your item was delivered to an individual at the address at 11:31 am on October 23, 2025 in LOCKESA, OK 73553.

**Delivered**
**Delivered, Left with Individual**
LOCKESA, OK 73553
October 23, 2025, 11:31 am
See All Tracking History
What Do USPS Tracking Statuses Mean?

Get More Out of USPS Tracking:
USPS Tracking Plus®

See More

Tracking Number:
9589071052701533176115
Copy Add to Informed Delivery

**Latest Update**
Your item was delivered to an individual at the address at 2:26 pm on October 22, 2025 in ALBUQUERQUE, NM 87114.

**Delivered**
**Delivered, Left with Individual**
ALBUQUERQUE, NM 87114
October 22, 2025, 2:26 pm
See All Tracking History
What Do USPS Tracking Statuses Mean?

Get More Out of USPS Tracking:
USPS Tracking Plus®

See More

Tracking Number:
9589071052701533176122
Copy Add to Informed Delivery

**Latest Update**
Your item was delivered to the front desk, reception area, or mail room at 12:41 pm on December 1, 2025 in MIDLAND, TX 79707.

**Delivered**
**Delivered, Front Desk/Reception/Mail Room**
MIDLAND, TX 79707
December 1, 2025, 12:41 pm
See All Tracking History
What Do USPS Tracking Statuses Mean?

Get More Out of USPS Tracking:
USPS Tracking Plus®

See More

Tracking Number:
9589071052701533176474
Copy Add to Informed Delivery

**Latest Update**
Your item was picked up at a postal facility at 3:31 pm on October 25, 2025 in ALBUQUERQUE, NM 87105.

**Delivered**
**Delivered, Individual Picked Up at Postal Facility**
ALBUQUERQUE, NM 87105
October 25, 2025, 3:31 pm
See All Tracking History
What Do USPS Tracking Statuses Mean?

Get More Out of USPS Tracking:
USPS Tracking Plus®

See More

Tracking Number:
9589071052701533176481
Copy Add to Informed Delivery

**Latest Update**
Your item has been delivered to the original sender at 10:56 am on November 18, 2025 in MIDLAND, TX 79707.

**Delivered**
**Delivered, To Original Sender**
MIDLAND, TX 79707
November 18, 2025, 10:56 am
See All Tracking History
What Do USPS Tracking Statuses Mean?

Get More Out of USPS Tracking:
USPS Tracking Plus®

See More

Tracking Number:
9589071052701533176498
Copy Add to Informed Delivery

**Latest Update**
This is a reminder to arrange for redelivery of your item or your item will be returned to sender.

Get More Out of USPS Tracking:
USPS Tracking Plus®

**Delivery Attempt**
**Reminder to Schedule Redelivery of your item**
October 25, 2025

**Available for Redelivery or Pickup**
ROSWELL
2000 SOUTH PECOS/VIANA AVE
ROSWELL, NM 88201-9998
M-F 0630-1700; SAT 0900-1200
October 21, 2025, 7:36 am
See All Tracking History
What Do USPS Tracking Statuses Mean?

See More

Tracking Number:
9589071052701533176504
Copy Add to Informed Delivery

**Latest Update**
Your item was delivered to the front desk, reception area, or mail room at 2:47 pm on October 22, 2025 in FORT WORTH, TX 76107.

**Delivered**
**Delivered, Front Desk/Reception/Mail Room**
FORT WORTH, TX 76107
October 22, 2025, 2:47 pm
See All Tracking History
What Do USPS Tracking Statuses Mean?

Get More Out of USPS Tracking:
USPS Tracking Plus®

See More

Tracking Number:
9589071052701533176511
Copy Add to Informed Delivery

**Latest Update**
Your item was delivered to an individual at the address at 12:27 pm on October 22, 2025 in EL RENO, OK 73036.

**Delivered**
**Delivered, Left with Individual**
EL RENO, OK 73036
October 22, 2025, 12:27 pm
See All Tracking History
What Do USPS Tracking Statuses Mean?

Get More Out of USPS Tracking:
USPS Tracking Plus®

See More

Tracking Number:
9589071052701533176528
Copy Add to Informed Delivery

**Latest Update**
Your item has been delivered to an agent. The item was picked up at USPS at 3:33 pm on October 27, 2025 in HOUSTON, TX 77002.

**Delivered to Agent**
**Delivered to Agent, Picked up at USPS**
HOUSTON, TX 77002
October 27, 2025, 3:33 pm
See All Tracking History
What Do USPS Tracking Statuses Mean?

Get More Out of USPS Tracking:
USPS Tracking Plus®

See More

Tracking Number:
9589071052701533176535
Copy Add to Informed Delivery

**Latest Update**
Your item was delivered to an individual at the address at 6:19 pm on October 25, 2025 in AUSTIN, TX 78704.

**Delivered**
**Delivered, Left with Individual**
AUSTIN, TX 78704
October 25, 2025, 6:19 pm
See All Tracking History
What Do USPS Tracking Statuses Mean?

Get More Out of USPS Tracking:
USPS Tracking Plus®

See More

Tracking Number:
9589071052701533176542
Copy Add to Informed Delivery

**Latest Update**
Your item was picked up at the post office at 12:15 pm on October 31, 2025 in CARLSBAD, NM 88220.

**Delivered**
**Delivered, Individual Picked Up at Post Office**
CARLSBAD, NM 88220
October 31, 2025, 12:15 pm
See All Tracking History
What Do USPS Tracking Statuses Mean?

Get More Out of USPS Tracking:
USPS Tracking Plus®

See More

Tracking Number:
9589071052701533176559
Copy Add to Informed Delivery

**Latest Update**
Your item was delivered to the front desk, reception area, or mail room at 12:07 pm on October 23, 2025 in DALLAS, TX 75240.

**Delivered**
**Delivered, Front Desk/Reception/Mail Room**
DALLAS, TX 75240
October 23, 2025, 12:07 pm
See All Tracking History
What Do USPS Tracking Statuses Mean?

Get More Out of USPS Tracking:
USPS Tracking Plus®

See More

Tracking Number:
9589071052701533176566
Copy Add to Informed Delivery

**Latest Update**
Your item was delivered to an individual at the address at 10:42 am on October 22, 2025 in MARLOW, OK 73055.

**Delivered**
**Delivered, Left with Individual**
MARLOW, OK 73055
October 22, 2025, 10:42 am
See All Tracking History
What Do USPS Tracking Statuses Mean?

Get More Out of USPS Tracking:
USPS Tracking Plus®

See More

Tracking Number:
9589071052701533176573
Copy Add to Informed Delivery

**Latest Update**
Your item was delivered to the front desk, reception area, or mail room at 1:41 pm on October 23, 2025 in HOUSTON, TX 77027.

**Delivered**
**Delivered, Front Desk/Reception/Mail Room**
HOUSTON, TX 77027
October 23, 2025, 1:41 pm
See All Tracking History
What Do USPS Tracking Statuses Mean?

Get More Out of USPS Tracking:
USPS Tracking Plus®

See More

Tracking Number:
9589071052701533176580
Copy Add to Informed Delivery

**Latest Update**
Your item was delivered to an individual at the address at 3:57 pm on October 24, 2025 in EDEN PRAIRIE, MN 55346.

**Delivered**
**Delivered, Left with Individual**
EDEN PRAIRIE, MN 55346
October 24, 2025, 3:57 pm
See All Tracking History
What Do USPS Tracking Statuses Mean?

Get More Out of USPS Tracking:
USPS Tracking Plus®

See More

Tracking Number:
9589071052701533176597
Copy Add to Informed Delivery

**Latest Update**
Your item was delivered to an individual at the address at 1:11 pm on October 23, 2025 in TUCSON, AZ 85748.

**Delivered**
**Delivered, Left with Individual**
TUCSON, AZ 85748
October 23, 2025, 1:11 pm
See All Tracking History
What Do USPS Tracking Statuses Mean?

Get More Out of USPS Tracking:
USPS Tracking Plus®

See More

Tracking Number:
9589071052701533176603
Copy Add to Informed Delivery

**Latest Update**
Your item was delivered to an individual at the address at 12:53 pm on October 20, 2025 in HAMMON, OK 73650.

**Delivered**
**Delivered, Left with Individual**
HAMMON, OK 73650
October 20, 2025, 12:53 pm
See All Tracking History
What Do USPS Tracking Statuses Mean?

Get More Out of USPS Tracking:
USPS Tracking Plus®

See More

Tracking Number: Remove

**9586110201653317661 0**

Copy | Add to Informed Delivery

**Latest Update**

Your item was delivered to the original sender at 10:31 pm on November 17, 2020 in MIDLAND, TX 79701.

**See More Out of USPS Tracking**
USPS Tracking Plus®

**Delivered**
**Delivered, To Original Sender**
MIDLAND, TX 79701
November 17, 2020, 10:31 pm

See All Tracking History

What Do USPS Tracking Statuses Mean?

**Text & Email Updates**

**USPS Tracking Plus®**

**Product Information**

See Less ^

Tracking Number: Remove

**9586110201653316627**

Copy | Add to Informed Delivery

**Latest Update**

Your item was delivered to an individual at the address at 10:00 am on October 26, 2020 in DALLAS, TX 75201.

**See More Out of USPS Tracking**
USPS Tracking Plus®

**Delivered**
**Delivered, Left with Individual**
DALLAS, TX 75201
October 26, 2020, 10:00 am

See All Tracking History

What Do USPS Tracking Statuses Mean?

See More ^

Tracking Number: Remove

**9586110201653316634**

Copy | Add to Informed Delivery

**Latest Update**

Your item was delivered to an individual at the address at 10:00 am on October 26, 2020 in DALLAS, TX 75201.

**See More Out of USPS Tracking**
USPS Tracking Plus®

**Delivered**
**Delivered, Left with Individual**
DALLAS, TX 75201
October 26, 2020, 10:00 am

See All Tracking History

What Do USPS Tracking Statuses Mean?

See More ^

Tracking Number: Remove

**9586110201653316641**

Copy | Add to Informed Delivery

**Latest Update**

Your item was delivered to an individual at the address at 10:00 am on October 26, 2020 in DALLAS, TX 75201.

**See More Out of USPS Tracking**
USPS Tracking Plus®

**Delivered**
**Delivered, Left with Individual**
DALLAS, TX 75201
October 26, 2020, 10:00 am

See All Tracking History

What Do USPS Tracking Statuses Mean?

See More ^

Tracking Number: Remove

**9586110201653316658**

Copy | Add to Informed Delivery

**Latest Update**

Your item was delivered to an individual at the address at 10:00 am on October 26, 2020 in DALLAS, TX 75206.

**See More Out of USPS Tracking**
USPS Tracking Plus®

**Delivered**
**Delivered, Left with Individual**
DALLAS, TX 75206
October 26, 2020, 10:00 am

See All Tracking History

What Do USPS Tracking Statuses Mean?

See More ^

Tracking Number: Remove

**9586110201653316665**

Copy | Add to Informed Delivery

**Latest Update**

Your package is moving within the USPS network and is on its way to its destination. It is scheduled to be delivered to your mailbox on or before:

**See More Out of USPS Tracking**
USPS Tracking Plus®

Delivered
Out for Delivery
Arrival at Unit
Departed or Arrived in Transit
Preparing for Delivery

**Moving Through Network**
Departed Regional Facility
October 27, 2020

**Departed USPS Regional Facility**
DALLAS TX SORTATION CENTER
October 25, 2020, 12:34 am

See All Tracking History

What Do USPS Tracking Statuses Mean?

See More ^

Tracking Number: Remove

**9586110201653316672**

Copy | Add to Informed Delivery

**Latest Update**

Your item was delivered to an individual at the address at 11:00 am on October 26, 2020 in SPRING, TX 77389.

**See More Out of USPS Tracking**
USPS Tracking Plus®

**Delivered**
**Delivered, Left with Individual**
SPRING, TX 77389
October 26, 2020, 11:00 am

See All Tracking History

What Do USPS Tracking Statuses Mean?

See More ^

Tracking Number: Remove

**9586110201653316689**

Copy | Add to Informed Delivery

**Latest Update**

Your item was delivered to an individual at the address at 11:00 am on October 26, 2020 in SPRING, TX 77389.

**See More Out of USPS Tracking**
USPS Tracking Plus®

**Delivered**
**Delivered, Left with Individual**
SPRING, TX 77389
October 26, 2020, 11:00 am

See All Tracking History

What Do USPS Tracking Statuses Mean?

See More ^

Tracking Number: Remove

**9586110201653316696**

Copy | Add to Informed Delivery

**Latest Update**

Your item has been delivered to the original sender at 10:24 am on November 19, 2020 in MIDLAND, TX 79701.

**See More Out of USPS Tracking**
USPS Tracking Plus®

**Delivered**
**Delivered, To Original Sender**
MIDLAND, TX 79701
November 19, 2020, 10:24 am

See All Tracking History

What Do USPS Tracking Statuses Mean?

See More ^

Tracking Number: Remove

**9586110201653316702**

Copy | Add to Informed Delivery

**Latest Update**

Your item was delivered to an individual at the address at 10:00 am on October 26, 2020 in DALLAS, TX 75201.

**See More Out of USPS Tracking**
USPS Tracking Plus®

**Delivered**
**Delivered, Left with Individual**
DALLAS, TX 75201
October 26, 2020, 10:00 am

See All Tracking History

What Do USPS Tracking Statuses Mean?

See More ^

Tracking Number: Remove

**9586110201653316719**

Copy | Add to Informed Delivery

**Latest Update**

Your item was picked up at the post office at 11:27 am on October 26, 2020 in DENVER, CO 80202.

**See More Out of USPS Tracking**
USPS Tracking Plus®

**Delivered**
**Delivered, Individual Pickup at Post Office**
DENVER, CO 80202
October 26, 2020, 11:27 am

See All Tracking History

What Do USPS Tracking Statuses Mean?

See More ^

Tracking Number: Remove

**9586110201653316726**

Copy | Add to Informed Delivery

**Latest Update**

Your item was delivered at or left in the mailbox at 8:56 pm on October 26, 2020 in DORANDO GROVE, IL 60147.

**See More Out of USPS Tracking**
USPS Tracking Plus®

**Delivered**
**Delivered, Left with Individual**
DORANDO GROVE, IL 60147
October 26, 2020, 8:56 pm

See All Tracking History

What Do USPS Tracking Statuses Mean?

See More ^

Tracking Number: Remove

**9586110201653316733**

Copy | Add to Informed Delivery

**Latest Update**

Your item was delivered to an individual at the address at 10:00 am on October 26, 2020 in CHANNELVIEW, TX 77530.

**See More Out of USPS Tracking**
USPS Tracking Plus®

**Delivered**
**Delivered, Left with Individual**
CHANNELVIEW, TX 77530
October 26, 2020, 10:00 am

See All Tracking History

What Do USPS Tracking Statuses Mean?

See More ^

Tracking Number: Remove

**9586110201653316740**

Copy | Add to Informed Delivery

**Latest Update**

Your item was picked up at the post office at 10:27 am on October 26, 2020 in CLEARWELL, TX 77531.

**See More Out of USPS Tracking**
USPS Tracking Plus®

**Delivered**
**Delivered, Individual Pickup at Post Office**
CLEARWELL, TX 77531
October 26, 2020, 10:27 am

See All Tracking History

What Do USPS Tracking Statuses Mean?

See More ^

Tracking Number: Remove

**9586110201653316757**

Copy | Add to Informed Delivery

**Latest Update**

Your item was picked up at the post office at 10:30 am on October 26, 2020 in OKLAHOMA CITY, OK 73150.

**See More Out of USPS Tracking**
USPS Tracking Plus®

**Alert**
**Undeliverable/Being Returned to Sender**
OKLAHOMA CITY, OK 73150
October 26, 2020, 10:30 am

**Available for Pickup**
OKLAHOMA CITY
972 SOUTHWEST MERWIN LN
OKLAHOMA CITY, OK 73150-9998
M-F 0800-1700

See All Tracking History

What Do USPS Tracking Statuses Mean?

See More ^

Tracking Number: Remove

**9586110201653316764**

Copy | Add to Informed Delivery

**Latest Update**

Your item was picked up at the post office at 7:00 am on October 26, 2020 in SANTA FE, NM 87501.

**See More Out of USPS Tracking**
USPS Tracking Plus®

**Delivered**
**Delivered, Individual Pickup at Post Office**
SANTA FE, NM 87501
October 26, 2020, 7:00 am

See All Tracking History

What Do USPS Tracking Statuses Mean?

See More ^

Tracking Number: Remove

**9586110201653316771**

Copy | Add to Informed Delivery

**Latest Update**

Your item was picked up at the post office at 9:04 am on October 26, 2020 in SAN DIEGO, CA 92199.

**See More Out of USPS Tracking**
USPS Tracking Plus®

**Delivered**
**Delivered, Individual Pickup at Post Office**
SAN DIEGO, CA 92199
October 26, 2020, 9:04 am

See All Tracking History

What Do USPS Tracking Statuses Mean?

See More ^

Tracking Number: Remove

**9586110201653316788**

Copy | Add to Informed Delivery

**Latest Update**

Your item was delivered to an individual at the address at 8:46 am on October 26, 2020 in ALTADENA, CA 91001.

**See More Out of USPS Tracking**
USPS Tracking Plus®

**Delivered**
**Delivered, Left with Individual**
ALTADENA, CA 91001
October 26, 2020, 8:46 am

See All Tracking History

What Do USPS Tracking Statuses Mean?

See More ^

Tracking Number: Remove

**9586110201653316795**

Copy | Add to Informed Delivery

**Latest Update**

Your item was delivered to an individual at the address at 9:15 pm on October 26, 2020 in ALTADENA, CA 91001.

**See More Out of USPS Tracking**
USPS Tracking Plus®

**Delivered**
**Delivered, Left with Individual**
ALTADENA, CA 91001
October 26, 2020, 9:15 pm

See All Tracking History

What Do USPS Tracking Statuses Mean?

See More ^

Tracking Number: Remove

**9586110201653316801**

Copy | Add to Informed Delivery

**Latest Update**

Your item was delivered to an individual at the address at 11:00 am on October 26, 2020 in AUSTIN, TX 78745.

**See More Out of USPS Tracking**
USPS Tracking Plus®

**Delivered**
**Delivered, Left with Individual**
AUSTIN, TX 78745
October 26, 2020, 11:00 am

See All Tracking History

What Do USPS Tracking Statuses Mean?

See More ^

Tracking Number: Remove

**9586110201653316818**

Copy | Add to Informed Delivery

**Latest Update**

Your item was delivered to an individual at the address at 10:10 pm on October 26, 2020 in DALLAS, TX 75215.

**See More Out of USPS Tracking**
USPS Tracking Plus®

**Delivered**
**Delivered, Left with Individual**
DALLAS, TX 75215
October 26, 2020, 10:10 pm

See All Tracking History

What Do USPS Tracking Statuses Mean?

See More ^

Tracking Number: Remove

**9586110201653316825**

Copy | Add to Informed Delivery

**Latest Update**

Your item was delivered to an individual at the address at 10:00 am on October 26, 2020 in DALLAS, TX 75216.

**See More Out of USPS Tracking**
USPS Tracking Plus®

**Delivered**
**Delivered, Left with Individual**
DALLAS, TX 75216
October 26, 2020, 10:00 am

See All Tracking History

What Do USPS Tracking Statuses Mean?

See More ^

Tracking Number: Remove

**9586110201653316832**

Copy | Add to Informed Delivery

**Latest Update**

Your item was delivered to an individual at the address at 10:00 am on October 26, 2020 in DALLAS, TX 75216.

**See More Out of USPS Tracking**
USPS Tracking Plus®

**Delivered**
**Delivered, Left with Individual**
DALLAS, TX 75216
October 26, 2020, 10:00 am

See All Tracking History

What Do USPS Tracking Statuses Mean?

See More ^

Tracking Number: Remove

**9586110201653316849**

Copy | Add to Informed Delivery

**Latest Update**

Your item was delivered to the front desk, reception area, or mail room at 9:00 am on October 26, 2020 in DALLAS, TX 75201.

**See More Out of USPS Tracking**
USPS Tracking Plus®

**Delivered**
**Delivered, Left with Client**
**Delivered, Front Desk/Reception/Mail Room**
DALLAS, TX 75201
October 26, 2020, 9:00 am

See All Tracking History

What Do USPS Tracking Statuses Mean?

See More ^

Tracking Number: Remove

**9586110201653316856**

Copy | Add to Informed Delivery

**Latest Update**

Your item was picked up at the post office at 11:28 am on October 26, 2020 in DALLAS, TX 75201.

**See More Out of USPS Tracking**
USPS Tracking Plus®

**Delivered**
**Delivered, Individual Pickup at Post Office**
DALLAS, TX 75201
October 26, 2020, 11:28 am

See All Tracking History

What Do USPS Tracking Statuses Mean?

See More ^

Tracking Number: Remove

**9586110201653316863**

Copy | Add to Informed Delivery

**Latest Update**

Your item was picked up at a postal facility at 7:07 am on October 27, 2020 in MIDLAND, TX 79701.

**See More Out of USPS Tracking**
USPS Tracking Plus®

**Delivered**
**Delivered, Individual Pickup at Postal Facility**
MIDLAND, TX 79701
October 27, 2020, 7:07 am

See All Tracking History

What Do USPS Tracking Statuses Mean?

See More ^

Tracking Number: Remove

**9586110201653316870**

Copy | Add to Informed Delivery

**Latest Update**

Your item was delivered to an individual at the address at 12:00 pm on October 26, 2020 in ROSEVILLE, CA 95747.

**See More Out of USPS Tracking**
USPS Tracking Plus®

**Delivered**
**Delivered, Left with Individual**
ROSEVILLE, CA 95747
October 26, 2020, 12:00 pm

See All Tracking History

What Do USPS Tracking Statuses Mean?

See More ^

Tracking Number: Remove

**9586110201653316887**

Copy | Add to Informed Delivery

**Latest Update**

Your item was delivered to the front desk, reception area, or mail room at 10:00 am on October 26, 2020 in ROSWELL, NM 88203.

**See More Out of USPS Tracking**
USPS Tracking Plus®

**Delivered**
**Delivered, Left with Client**
**Delivered, Front Desk/Reception/Mail Room**
ROSWELL, NM 88201
October 26, 2020, 10:00 am

See All Tracking History

What Do USPS Tracking Statuses Mean?

See More ^

Tracking Number: Remove

**9586110201653316894**

Copy | Add to Informed Delivery

**Latest Update**

Your item was picked up at a postal facility at 7:45 am on October 27, 2020 in MIDLAND, TX 79701.

**See More Out of USPS Tracking**
USPS Tracking Plus®

**Delivered**
**Delivered, Individual Pickup at Postal Facility**
MIDLAND, TX 79701
October 27, 2020, 7:45 am

See All Tracking History

What Do USPS Tracking Statuses Mean?

See More ^

Tracking Number: Remove

**9586110201653316900**

Copy | Add to Informed Delivery

**Latest Update**

Your item was picked up at a postal facility at 7:45 am on October 27, 2020 in MIDLAND, TX 79701.

**See More Out of USPS Tracking**
USPS Tracking Plus®

**Delivered**
**Delivered, Individual Pickup at Postal Facility**
MIDLAND, TX 79701
October 27, 2020, 7:45 am

See All Tracking History

What Do USPS Tracking Statuses Mean?

See More ^

Tracking Number:
**9590 9402 7019 5317 6907 7**

Copy | Add to Informed Delivery

**Latest Update**
Your item has been delivered at or left in the front yard at 10:00 am on October 24, 2021, in ROCKLAND, MA 02370.

**See More Out of USPS Tracking:**
USPS Tracking®

**Delivered**
**Delivered, Individual Picked Up at Post Office**
ROCKLAND, MA 02370
October 24, 2021, 10:00 am

See All Tracking History

What Do USPS Tracking Statuses Mean?

**Text & Email Updates**

**USPS Tracking Plus®**

**Product Information**

See Less ∧

Tracking Number:
**9590 9402 7019 5317 6924 0**

Copy | Add to Informed Delivery

**Latest Update**
Your item was delivered at or around 9:18 am on October 21, 2021 in ABINGTON, MA 02351.

**See More Out of USPS Tracking:**
USPS Tracking®

**Delivered**
**Delivered, Individual Picked Up at Post Office**
ABINGTON, MA 02351
October 21, 2021, 9:18 am

See All Tracking History

What Do USPS Tracking Statuses Mean?

Remove ✕

Tracking Number:
**9590 9402 7019 5317 6931 1**

Copy | Add to Informed Delivery

**Latest Update**
Your item was delivered at or around 9:18 am on October 21, 2021 in ABINGTON, MA 02351.

**See More Out of USPS Tracking:**
USPS Tracking®

**Delivered**
**Delivered, Individual Picked Up at Post Office**
ABINGTON, MA 02351
October 21, 2021, 9:18 am

See All Tracking History

What Do USPS Tracking Statuses Mean?

Remove ✕

Tracking Number:
**9590 9402 7019 5317 6948 5**

Copy | Add to Informed Delivery

**Latest Update**
Your item has been delivered to an agent at the front door, front porch, or mailbox at 2:00 pm on October 20, 2021 in ROCKLAND, MA 02370.

**See More Out of USPS Tracking:**
USPS Tracking®

**Delivered to Agent**
**Delivered to Agent, Front Door/Porch/Mailbox**
ROCKLAND, MA 02370
LAKELAND, MA 33810
October 20, 2021, 2:00 pm

See All Tracking History

What Do USPS Tracking Statuses Mean?

Remove ✕

Tracking Number:
**9590 9402 7019 5317 6955 5**

Copy | Add to Informed Delivery

**Latest Update**
Your item has been delivered to the original sender at 12:00 pm on October 20, 2021 in ROCKLAND, MA 02370.

**See More Out of USPS Tracking:**
USPS Tracking®

**Delivered**
**Delivered, To Original Sender**
ROCKLAND, MA 02370
October 20, 2021, 12:00 pm

See All Tracking History

What Do USPS Tracking Statuses Mean?

Remove ✕

Tracking Number:
**9590 9402 7019 5317 6962 2**

Copy | Add to Informed Delivery

**Latest Update**
Your item was delivered to an individual at the address at 7:00 am on October 20, 2021 in BOSTON, MA 02108.

**See More Out of USPS Tracking:**
USPS Tracking®

**Delivered**
**Delivered, Individual Picked Up at Post Office**
BOSTON, MA 02108
October 20, 2021, 7:00 am

See All Tracking History

What Do USPS Tracking Statuses Mean?

Remove ✕

Tracking Number:
**9590 9402 7019 5317 6979 9**

Copy | Add to Informed Delivery

**Latest Update**
Your item has been delivered to the original sender at 9:48 pm on November 15, 2020 in ALLSTON, TX 78359.

**See More Out of USPS Tracking:**
USPS Tracking®

**Delivered**
**Delivered, To Original Sender**
ALLSTON, TX 78359
November 15, 2020, 9:48 pm

See All Tracking History

What Do USPS Tracking Statuses Mean?

Remove ✕

Tracking Number:
**9590 9402 7019 5317 6986 6**

Copy | Add to Informed Delivery

**Latest Update**
Your item was delivered to an individual at the address at 11:48 am on November 13, 2020 in ALLSTON, TX 78359.

**See More Out of USPS Tracking:**
USPS Tracking®

**Delivered**
**Delivered, Left with Individual**
ALLSTON, TX 78359
November 13, 2020, 11:48 am

See All Tracking History

What Do USPS Tracking Statuses Mean?

Remove ✕

Tracking Number:
**9590 9402 7019 5317 6993 3**

Copy | Add to Informed Delivery

**Latest Update**
Your item was delivered to an individual at the address at 11:48 am on November 13, 2020 in ALLSTON, TX 78359.

**See More Out of USPS Tracking:**
USPS Tracking®

**Delivered**
**Delivered, Left with Individual**
ALLSTON, TX 78359
November 13, 2020, 11:48 am

See All Tracking History

What Do USPS Tracking Statuses Mean?

Remove ✕

Tracking Number:
**9590 9402 7019 5317 7000 6**

Copy | Add to Informed Delivery

**Latest Update**
Your item was delivered to the front door, reception area, or mailbox at 1:00 pm on October 28, 2020 in ROCKLAND, MA 02370.

**See More Out of USPS Tracking:**
USPS Tracking®

**Delivered**
**Delivered, Left in Front of Door, Door/Gate/Mailbox/Front Room**
ROCKLAND, MA 02370
October 28, 2020, 1:00 pm

See All Tracking History

What Do USPS Tracking Statuses Mean?

Remove ✕

Tracking Number:
**9590 9402 7019 5317 7013 0**

Copy | Add to Informed Delivery

**Latest Update**
Your item was delivered at or around 1:00 pm on October 28, 2020 in ROCKLAND, MA 02370.

**See More Out of USPS Tracking:**
USPS Tracking®

**Delivered**
**Delivered**
ROCKLAND, MA 02370
October 28, 2020, 1:00 pm

See All Tracking History

What Do USPS Tracking Statuses Mean?

Tracking Number:
**9590 9402 7019 5317 7020 9**

Copy | Add to Informed Delivery

**Latest Update**
Your item was picked up at the post office at 10:40 am on October 26, 2020, in ROCKLAND, MA 02370.

**See More Out of USPS Tracking:**
USPS Tracking®

**Delivered**
**Delivered, Individual Picked Up at Post Office**
ROCKLAND, MA 02370
October 26, 2020, 10:40 am

See All Tracking History

What Do USPS Tracking Statuses Mean?

Remove ✕

Tracking Number:
**9590 9402 7019 5317 7037 7**

Copy | Add to Informed Delivery

**Latest Update**
Your item was picked up at the post office at 10:40 am on October 26, 2020, in ROCKLAND, MA 02370.

**See More Out of USPS Tracking:**
USPS Tracking®

**Delivered**
**Delivered, Individual Picked Up at Post Office**
ROCKLAND, MA 02370
October 26, 2020, 10:40 am

See All Tracking History

What Do USPS Tracking Statuses Mean?

Remove ✕

Tracking Number:
**9590 9402 7019 5317 7044 4**

Copy | Add to Informed Delivery

**Latest Update**
Your item was picked up at the post office at 10:40 am on October 26, 2020, in ROCKLAND, MA 02370.

**See More Out of USPS Tracking:**
USPS Tracking®

**Delivered**
**Delivered, Individual Picked Up at Post Office**
ROCKLAND, MA 02370
October 26, 2020, 10:40 am

See All Tracking History

What Do USPS Tracking Statuses Mean?

Remove ✕

Tracking Number:
**9590 9402 7019 5317 7051 1**

Copy | Add to Informed Delivery

**Latest Update**
Your item was picked up at the post office at 10:40 am on October 26, 2020, in ROCKLAND, MA 02370.

**See More Out of USPS Tracking:**
USPS Tracking®

**Delivered**
**Delivered, Individual Picked Up at Post Office**
ROCKLAND, MA 02370
October 26, 2020, 10:40 am

See All Tracking History

What Do USPS Tracking Statuses Mean?

Remove ✕

Tracking Number:
**9590 9402 7019 5317 7068 8**

Copy | Add to Informed Delivery

**Latest Update**
Your item was picked up at the post office at 10:40 am on October 26, 2020, in ROCKLAND, MA 02370.

**See More Out of USPS Tracking:**
USPS Tracking®

**Delivered**
**Delivered, Individual Picked Up at Post Office**
ROCKLAND, MA 02370
October 26, 2020, 10:40 am

See All Tracking History

What Do USPS Tracking Statuses Mean?

Remove ✕

Tracking Number:
**9590 9402 7019 5317 7075 5**

Copy | Add to Informed Delivery

**Latest Update**
Your item was delivered at or around 1:00 pm on October 28, 2020 in ROCKLAND, MA 02370.

**See More Out of USPS Tracking:**
USPS Tracking®

**Delivered**
**Delivered, PO Box**
ROCKLAND, MA 02370
October 28, 2020, 1:00 pm

See All Tracking History

What Do USPS Tracking Statuses Mean?

Remove ✕

Tracking Number:
**9590 9402 7019 5317 7082 2**

Copy | Add to Informed Delivery

**Latest Update**
Your item was delivered at or around 1:00 pm on October 28, 2020 in ROCKLAND, MA 02370.

**See More Out of USPS Tracking:**
USPS Tracking®

**Delivered**
**Delivered, PO Box**
ROCKLAND, MA 02370
October 28, 2020, 1:00 pm

See All Tracking History

What Do USPS Tracking Statuses Mean?

Remove ✕

Tracking Number:
**9590 9402 7019 5317 7099 9**

Copy | Add to Informed Delivery

**Latest Update**
Your item was picked up at the post office at 12:37 pm on October 26, 2020, in ROCKLAND, MA 02370.

**See More Out of USPS Tracking:**
USPS Tracking®

**Delivered**
**Delivered, Individual Picked Up at Post Office**
ROCKLAND, MA 02370
October 26, 2020, 12:37 pm

See All Tracking History

What Do USPS Tracking Statuses Mean?

Remove ✕

Tracking Number:
**9590 9402 7019 5317 7105 6**

Copy | Add to Informed Delivery

**Latest Update**
Your item was picked up at the post office at 9:12 am on October 23, 2020, in SAN ANTONIO, TX 78205.

**See More Out of USPS Tracking:**
USPS Tracking®

**Delivered**
**Delivered, Individual Picked Up at Post Office**
SAN ANTONIO, TX 78205
October 23, 2020, 9:12 am

See All Tracking History

What Do USPS Tracking Statuses Mean?

Remove ✕

Tracking Number:
**9590 9402 7019 5317 7112 1**

Copy | Add to Informed Delivery

**Latest Update**
Your item was picked up at the post office at 3:07 pm on October 22, 2020, in ROCKLAND, MA 02370.

**See More Out of USPS Tracking:**
USPS Tracking®

**Delivered**
**Delivered, Individual Picked Up at Post Office**
ROCKLAND, MA 02370
October 22, 2020, 3:07 pm

See All Tracking History

What Do USPS Tracking Statuses Mean?

Remove ✕

Tracking Number:
**9590 9402 7019 5317 7129 9**

Copy | Add to Informed Delivery

**Latest Update**
Your item was picked up at the post office at 3:07 pm on October 22, 2020, in ROCKLAND, MA 02370.

**See More Out of USPS Tracking:**
USPS Tracking®

**Delivered**
**Delivered, Individual Picked Up at Post Office**
ROCKLAND, MA 02370
October 22, 2020, 3:07 pm

See All Tracking History

What Do USPS Tracking Statuses Mean?

Remove ✕

Tracking Number:
**9590 9402 7019 5317 7136 0**

Copy | Add to Informed Delivery

**Latest Update**
Your item was picked up at the post office at 12:00 pm on October 21, 2020, in ROCKLAND, MA 02370.

**See More Out of USPS Tracking:**
USPS Tracking®

**Delivered**
**Delivered, Individual Picked Up at Post Office**
ROCKLAND, MA 02370
October 21, 2020, 12:00 pm

See All Tracking History

What Do USPS Tracking Statuses Mean?

Remove ✕

Tracking Number:
**9590 9402 7019 5317 7143 1**

Copy | Add to Informed Delivery

**Latest Update**
Your item has been delivered to the original sender at 12:01 am on December 1, 2020 in ABILANE, TX 79601.

**See More Out of USPS Tracking:**
USPS Tracking®

**Delivered**
**Delivered, To Original Sender**
ABILANE, TX 79601
December 1, 2020, 12:01 am

See All Tracking History

What Do USPS Tracking Statuses Mean?

Remove ✕

Tracking Number:
**9590 9402 7019 5317 7150 9**

Copy | Add to Informed Delivery

**Latest Update**
Your item was picked up at the post office at 10:07 am on October 21, 2020, in ROCKLAND, MA 02370.

**See More Out of USPS Tracking:**
USPS Tracking®

**Delivered**
**Delivered, Individual Picked Up at Post Office**
ROCKLAND, MA 02370
October 21, 2020, 10:07 am

See All Tracking History

What Do USPS Tracking Statuses Mean?

Remove ✕

Tracking Number:
**9590 9402 7019 5317 7167 7**

Copy | Add to Informed Delivery

**Latest Update**
Your item was picked up at the post office at 1:00 pm on October 20, 2020, in FORT WORTH, TX 76101.

**See More Out of USPS Tracking:**
USPS Tracking®

**Delivered**
**Delivered, Individual Picked Up at Post Office**
FORT WORTH, TX 76101
October 20, 2020, 1:00 pm

See All Tracking History

What Do USPS Tracking Statuses Mean?

Remove ✕

Tracking Number:
**9590 9402 7019 5317 7174 8**

Copy | Add to Informed Delivery

**Latest Update**
Your item was picked up at the post office at 1:00 pm on October 20, 2020, in FORT WORTH, TX 76101.

**See More Out of USPS Tracking:**
USPS Tracking®

**Delivered**
**Delivered, Individual Picked Up at Post Office**
FORT WORTH, TX 76101
October 20, 2020, 1:00 pm

See All Tracking History

What Do USPS Tracking Statuses Mean?

Remove ✕

Tracking Number:
**9590 9402 7019 5317 7181 4**

Copy | Add to Informed Delivery

**Latest Update**
Your item was picked up at the post office at 1:00 pm on October 20, 2020, in FORT WORTH, TX 76101.

**See More Out of USPS Tracking:**
USPS Tracking®

**Delivered**
**Delivered, Individual Picked Up at Post Office**
FORT WORTH, TX 76101
October 20, 2020, 1:00 pm

See All Tracking History

What Do USPS Tracking Statuses Mean?

Remove ✕

Tracking Number:
**9590 9402 7019 5317 7198 0**

Copy | Add to Informed Delivery

**Latest Update**
Your package is moving within the USPS network and is on its way to its destination.

**See More Out of USPS Tracking:**
USPS Tracking®

**In Transit**
**Moving Through Network**
ROCKLAND, MA 02370
In Transit to Next Site

**Arrived at USPS Regional Facility**
BROCKTON DISTRIBUTION CENTER
Saturday, Oct 23, 2021, 1:12 pm

See All Tracking History

What Do USPS Tracking Statuses Mean?

Remove ✕

Tracking Number:
**9590 9402 7019 5317 7204 0**

Copy | Add to Informed Delivery

**Latest Update**
Your item was delivered at or around 1:00 pm on October 21, 2020 in ROCKLAND, MA 02370.

**See More Out of USPS Tracking:**
USPS Tracking®

**Delivered**
**Delivered, PO Box**
ROCKLAND, MA 02370
October 21, 2020, 1:00 pm

See All Tracking History

What Do USPS Tracking Statuses Mean?

Remove ✕

Tracking Number:
**9590 9402 7019 5317 7211 1**

Copy | Add to Informed Delivery

**Latest Update**
Your item was picked up at the post office at 11:00 am on October 21, 2020, in ROCKLAND, MA 02370.

**See More Out of USPS Tracking:**
USPS Tracking®

**Delivered**
**Delivered, Individual Picked Up at Post Office**
ROCKLAND, MA 02370
October 21, 2020, 11:00 am

See All Tracking History

What Do USPS Tracking Statuses Mean?

Remove ✕

Tracking Number:
**9590 9402 7019 5317 7228 5**

Copy | Add to Informed Delivery

**Latest Update**
Your item was picked up at the post office at 10:00 am on October 21, 2020, in ROCKLAND, MA 02370.

**See More Out of USPS Tracking:**
USPS Tracking®

**Delivered**
**Delivered, Individual Picked Up at Post Office**
ROCKLAND, MA 02370
October 21, 2020, 10:00 am

See All Tracking History

What Do USPS Tracking Statuses Mean?

Remove ✕

Tracking Number:
**9590 9402 7019 5317 7235 6**

Copy | Add to Informed Delivery

**Latest Update**
Your item has been delivered to the original sender at 1:00 pm on October 21, 2020 in ABILANE, TX 79601.

**See More Out of USPS Tracking:**
USPS Tracking®

**Delivered**
**Delivered, To Original Sender**
ABILANE, TX 79601
October 21, 2020, 1:00 pm

See All Tracking History

What Do USPS Tracking Statuses Mean?

Remove ✕

Tracking Number:
**9590 9402 7019 5317 7242 0**

Copy | Add to Informed Delivery

**Latest Update**
Your item was picked up at the post office at 10:00 am on October 21, 2020, in ROCKLAND, MA 02370.

**See More Out of USPS Tracking:**
USPS Tracking®

**Delivered**
**Delivered, Individual Picked Up at Post Office**
ROCKLAND, MA 02370
October 21, 2020, 10:00 am

See All Tracking History

What Do USPS Tracking Statuses Mean?

Remove ✕

See More ∨

**From:** Florez, Marie E
**To:** Clelland, Sarah, EMNRD
**Subject:** RE: [EXTERNAL] XTO Expedited Commingle List as of 12/1/2025
**Date:** Wednesday, December 3, 2025 12:49:07 PM
**Attachments:** DI 30 CTB_NMOCDApplicationLetter.1 new.pdf
DI 30 CTB_NMOCDApplicationLetter.1 existing.pdf

---

Sarah,

See attached: One has NEW at the end and the other has EXISTING at the end.

Will this work?

Thanks

*Marie E. Florez*
Regulatory Analyst
Permian Basin – Delaware Operations

**ExxonMobil Upstream Company**
A division of Exxon Mobil Corporation
6401 Holiday Hill Rd
Midland, TX 79707

505-419-8420 cell
432-894-4949 cell
Marie.florez@exxonmobil.com

---

**From:** Clelland, Sarah, EMNRD <Sarah.Clelland@emnrd.nm.gov>
**Sent:** Wednesday, December 3, 2025 10:27 AM
**To:** Young, Russell <russell.young@exxonmobil.com>
**Cc:** Riley, Heather /C <heather.riley@exxonmobil.com>; Florez, Marie E <marie.florez@exxonmobil.com>; Granillo, Lacey /C <lacey.granillo@exxonmobil.com>
**Subject:** RE: [EXTERNAL] XTO Expedited Commingle List as of 12/1/2025

Can someone please look at Action ID's 520321 & 520328?

They look like the EXACT same application to me. Am I missing something? The only thing that looks different is the lease map.

Thanks,

Sarah Clelland

**Petroleum Specialist**
State of New Mexico
Energy, Minerals, and Natural Resources Department
Oil Conservation Division
Cell: (505) 537-0627
Sarah.Clelland@emnrd.nm.gov

---

**From:** Young, Russell <russell.young@exxonmobil.com>
**Sent:** Tuesday, December 2, 2025 3:26 PM
**To:** Clelland, Sarah, EMNRD <Sarah.Clelland@emnrd.nm.gov>; McClure, Dean, EMNRD <Dean.McClure@emnrd.nm.gov>; Wrinkle, Justin, EMNRD <Justin.Wrinkle@emnrd.nm.gov>; Rikala, Ward, EMNRD <Ward.Rikala@emnrd.nm.gov>
**Cc:** Riley, Heather /C <heather.riley@exxonmobil.com>; Florez, Marie E <marie.florez@exxonmobil.com>; Granillo, Lacey /C <lacey.granillo@exxonmobil.com>
**Subject:** RE: [EXTERNAL] XTO Expedited Commingle List as of 12/1/2025

Hi Sarah,

Thank you for your email and for your effort to expedite the review. I put the first date after the notice period finishes because the facility is ready. This one had to be re-submitted (and re-notice) because of corrections that we needed to make, so the tight timing is on us.

For awareness, Priority 2 on the list is also shown as needed 1 day after the notice period expires, simply because the facility is ready early.

In general, thanks for all the commingle reviews you've done and for the quality of feedback that you provide. It's extremely helpful for us to continue to improve our internal processes.

Regards,

**Russell Young**
New Mexico Commingle Manager
ExxonMobil Upstream Company
Phone: (832) 302-5430
Email: russell.young@exxonmobil.com

---

**From:** Clelland, Sarah, EMNRD <Sarah.Clelland@emnrd.nm.gov>
**Sent:** Tuesday, December 2, 2025 9:08 AM
**To:** Young, Russell <russell.young@exxonmobil.com>; McClure, Dean, EMNRD

<Dean.McClure@emnrd.nm.gov>; Wrinkle, Justin, EMNRD <Justin.Wrinkle@emnrd.nm.gov>; Rikala, Ward, EMNRD <Ward.Rikala@emnrd.nm.gov>
**Cc:** Riley, Heather /C <heather.riley@exxonmobil.com>; Florez, Marie E <marie.florez@exxonmobil.com>; Granillo, Lacey /C <lacey.granillo@exxonmobil.com>
**Subject:** RE: [EXTERNAL] XTO Expedited Commingle List as of 12/1/2025

Hi Russell,

Just wanted to reach out and make sure you are aware that number 1 on your list, which says needed by 12/05/2025, cannot be completed by then.
The notice period for protest does not expire until 12/04/2025. I will do my best to get to it as soon as possible after the notice period is over.
Please let me know if you have any questions.

Thanks,

Sarah Clelland

**Petroleum Specialist**
State of New Mexico
Energy, Minerals, and Natural Resources Department
Oil Conservation Division
Cell: (505) 537-0627
Sarah.Clelland@emnrd.nm.gov

---

**From:** Young, Russell <russell.young@exxonmobil.com>
**Sent:** Monday, December 1, 2025 4:06 PM
**To:** Clelland, Sarah, EMNRD <Sarah.Clelland@emnrd.nm.gov>; McClure, Dean, EMNRD <Dean.McClure@emnrd.nm.gov>; Wrinkle, Justin, EMNRD <Justin.Wrinkle@emnrd.nm.gov>; Rikala, Ward, EMNRD <Ward.Rikala@emnrd.nm.gov>
**Cc:** Riley, Heather /C <heather.riley@exxonmobil.com>; Florez, Marie E <marie.florez@exxonmobil.com>; Granillo, Lacey /C <lacey.granillo@exxonmobil.com>
**Subject:** [EXTERNAL] XTO Expedited Commingle List as of 12/1/2025

CAUTION: This email originated outside of our organization. Exercise caution prior to clicking on links or opening attachments.

Good afternoon OCD,

Attached is the latest expedited list for XTO's commingle submissions. Please don't hesitate to reach out if you have any questions.

Regards,

**Russell Young**

New Mexico Commingle Manager
Unconventional, Upstream

**ExxonMobil Upstream Company**
22777 Springwoods Village Parkway
Wellness 4, 2nd Floor
Spring, Texas 77389
Phone: (832) 302-5430
Email: russell.young@exxonmobil.com

**From:** Florez, Marie E
**To:** Clelland, Sarah, EMNRD
**Cc:** Granillo, Lacey /C; Walker, Crystal L /C
**Subject:** RE: [EXTERNAL] BEU DI 30 - VRU application ACTION ID 520284
**Date:** Wednesday, December 10, 2025 4:24:16 PM
**Attachments:** BEU DI30 Facility Statement 20250703 removed VRU.pdf
DI 30 CTB_NMOCDApplicationLetter.1 new removed VRU.pdf
DI 30 CTB_NMOCDApplicationLetter.1 existing Removed VRU.pdf
DI 30 CTB_NMOCDApplicationLetter.1 VRU.pdf
VRU Facility - CORRECTED removed oil.pdf

---

Sarah,
See attached:

If you have any questions, please let me know.

Thanks,

*Marie E. Florez*
Regulatory Analyst
Permian Basin – Delaware Operations

**ExxonMobil Upstream Company**
A division of Exxon Mobil Corporation
6401 Holiday Hill Rd
Midland, TX 79707

505-419-8420 cell
432-894-4949 cell
Marie.florez@exxonmobil.com

---

**From:** Clelland, Sarah, EMNRD <Sarah.Clelland@emnrd.nm.gov>
**Sent:** Monday, December 8, 2025 8:08 AM
**To:** Florez, Marie E <marie.florez@exxonmobil.com>
**Subject:** Re: [EXTERNAL] BEU DI 30 - VRU application ACTION ID 520284

Hey,

Can we move this to 1:30?

Get Outlook for iOS

---

**From:** Clelland, Sarah, EMNRD
**Sent:** Friday, December 5, 2025 1:28:06 PM
**To:** Florez, Marie E <marie.florez@exxonmobil.com>
**Subject:** RE: [EXTERNAL] BEU DI 30 - VRU application ACTION ID 520284

So, we can obviously have this discussion on Monday, but I will forget if I don't say something now.
I am thinking we keep the VRU on the same application as the Oil and Gas order because XTO is going to be producing all at this CTB. The only reason Dean did a VRU only order is because that was the only thing being commingled at that battery.

Thanks,

Sarah Clelland

**Petroleum Specialist**
State of New Mexico
Energy, Minerals, and Natural Resources Department
Oil Conservation Division
Cell: (505) 537-0627
Sarah.Clelland@emnrd.nm.gov

---

**From:** Florez, Marie E <marie.florez@exxonmobil.com>
**Sent:** Friday, December 5, 2025 12:13 PM
**To:** Clelland, Sarah, EMNRD <Sarah.Clelland@emnrd.nm.gov>
**Cc:** Granillo, Lacey /C <lacey.granillo@exxonmobil.com>; Young, Russell <russell.young@exxonmobil.com>; Walker, Crystal L /C <crystal.l.walker@exxonmobil.com>; Rubio, Amber /C <amber.rubio@exxonmobil.com>
**Subject:** [EXTERNAL] BEU DI 30 - VRU application ACTION ID 520284

CAUTION: This email originated outside of our organization. Exercise caution prior to clicking on links or opening attachments.

Sarah,

Per our phone conversation, I'm requesting NMOCD to reject Action ID 520284 for BEU DI 30, since the VRU language is part of the existing order and the new application there's no need for a Standalone VRU submittal.

If you have any questions, please let me know.

Thank you,

*Marie E. Florez*
Regulatory Analyst
Permian Basin – Delaware Operations

**ExxonMobil Upstream Company**
A division of Exxon Mobil Corporation
6401 Holiday Hill Rd
Midland, TX 79707

505-419-8420 cell
432-894-4949 cell
Marie.florez@exxonmobil.com

**STATE OF NEW MEXICO**
**ENERGY, MINERALS AND NATURAL RESOURCES DEPARTMENT**
**OIL CONSERVATION DIVISION**

**APPLICATION FOR SURFACE COMMINGLING**
**SUBMITTED BY XTO PERMIAN OPERATING, LLC** **ORDER NO. PLC-652-B**

## ORDER

The Director of the New Mexico Oil Conservation Division ("OCD"), having considered the application and the recommendation of the OCD Engineering Bureau, issues the following Order.

## FINDINGS OF FACT

1. XTO Permian Operating, LLC ("Applicant") submitted a complete application to surface commingle the oil and gas production from the pools, leases, and wells as described in Exhibit A ("Application").
2. Applicant proposed a method to allocate the oil and gas production to the pools, leases, and wells to be commingled.
3. Applicant provided notice of the Application to all persons owning an interest in the oil and gas production to be commingled, including the owners of royalty and overriding royalty interests, regardless of whether they have a right or option to take their interests in kind, and those persons either submitted a written waiver or did not file an objection to the Application.
4. Applicant provided notice of the Application to the Bureau of Land Management ("BLM") or New Mexico State Land Office ("NMSLO"), as applicable.
5. Applicant certified the commingling of oil and gas production from the pools, leases, and wells will not in reasonable probability reduce the value of the oil and gas production to less than if it had remained segregated.
6. Applicant in the notice for the Application stated that it sought authorization to prospectively include additional pools, leases, and wells in accordance with 19.15.12.10 C.(4)(g) NMAC.
7. Applicant stated that it sought authorization to surface commingle and off-lease measure, as applicable, oil and gas production from wells which have not yet been approved to be drilled, but will produce from a pool and lease as described in Exhibit A.
8. This Order is associated with Order CTB-1179 which authorizes in-full or in-part the commingling of VRU Flash Gas production from the pools, leases, and wells as described in Exhibit A.

## CONCLUSIONS OF LAW

9. OCD has jurisdiction to issue this Order pursuant to the Oil and Gas Act, NMSA 1978, §§ 70-2-6, 70-2-11, 70-2-12, 70-2-16, and 70-2-17, 19.15.12. NMAC, and 19.15.23. NMAC.



Released to Imaging: 12/23/2025 10:46:56 AM

10. Applicant satisfied the notice requirements for the Application in accordance with 19.15.12.10 A.(2) NMAC, 19.15.12.10 C.(4)(c) NMAC, and 19.15.12.10 C.(4)(e) NMAC, as applicable.

11. Applicant satisfied the notice requirements for the Application in accordance with 19.15.23.9 A.(5) NMAC and 19.15.23.9 A.(6) NMAC, as applicable.

12. Applicant's proposed method of allocation, as modified herein, complies with 19.15.12.10 B.(1) NMAC or 19.15.12.10 C.(1) NMAC, as applicable.

13. Commingling of oil and gas production from state, federal, or tribal leases shall not commence until approved by the BLM or NMSLO, as applicable, in accordance with 19.15.12.10 B.(3) NMAC and 19.15.12.10 C.(4)(h) NMAC.

14. Applicant satisfied the notice requirements for the subsequent addition of pools, leases, and wells in the notice for the Application, in accordance with 19.15.12.10 C.(4)(g) NMAC. Subsequent additions of pools, leases, and wells within Applicant's defined parameters, as modified herein, will not, in reasonable probability, reduce the commingled production's value or otherwise adversely affect the interest owners in the production to be added.

15. By granting the Application with the conditions specified below, this Order prevents waste and protects correlative rights, public health, and the environment.

## ORDER

1. Applicant is authorized to surface commingle oil and gas production from the pools, leases, and wells as described in Exhibit A.

   Applicant is authorized to store and measure oil and gas production off-lease from the pools, leases, and wells as described in Exhibit A at a central tank battery or gas title transfer meter described in Exhibit A.

   Applicant is authorized to surface commingle oil and gas production from wells not included in Exhibit A but that produce from a pool and lease as described in Exhibit A.

   Applicant is authorized to store and measure oil and gas production off-lease from wells not included in Exhibit A but that produce from a pool and lease as described in Exhibit A at a central tank battery or gas title transfer meter described in Exhibit A.

2. This Order supersedes Order PLC-652-A.

3. The allocation of oil and gas production to wells not included in Exhibit A but that produce from a pool and lease as described in Exhibit A shall be determined in the same manner as to wells identified in Exhibit A that produce from that pool and lease, provided that if more than one allocation method is being used or if there are no wells identified in Exhibit A that produce from the pool and lease, then allocation of oil and gas production to each well not included in Exhibit A shall be determined by OCD prior to commingling production from it with the production from another well.

4. The allocation of oil and gas production shall be based on the production life of each well as measured for three periods: (a) the initial production period shall be measured from the first production until the earlier of either the peak production rate or thirty (30) days after the first production; (b) the plateau period shall be measured from the end of the initial production period to the peak decline rate; and (c) the decline period shall be measured from the end of the plateau period until the well is plugged and abandoned.

   During the initial production period, the oil and gas production for each well identified in Exhibit A shall be allocated using a production curve calculated from a minimum of ten (10) well tests per month, except that any day in which a well test cannot achieve an accurate result due to a temporary change in oil and gas production shall not be included in the computation of time determining the well test schedule. The production curve shall be calculated by interpolating daily production for each day using the known daily production obtained by well tests and shall use a method of interpolation that is at minimum as accurate as maintaining a constant rate of change for each day's production between the known daily production values.

   During the plateau period, the oil and gas production for each well identified in Exhibit A shall be allocated using a minimum of three (3) well tests per month.

   During the decline period, the oil and gas production for each well identified in Exhibit A shall be allocated as follows: (a) a minimum of three (3) well tests per month when the decline rate is greater than twenty-two percent (22%) per month; (b) a minimum of two (2) well tests per month when the decline rate is between twenty-two percent (22%) and ten percent (10%) per month; and (c) a minimum of one (1) well test per month when the decline rate is less than ten percent (10%) per month.

   Upon OCD's request, Applicant shall submit a Form C-103 to the OCD Engineering Bureau that contains the decline rate curve and other relevant information demonstrating the production life of a well.

   Applicant shall conduct a well test by separating and metering the oil and gas production from that well for either (a) a minimum of twenty-four (24) consecutive hours; or (b) a combination of nonconsecutive periods that meet the following conditions: (i) each period shall be a minimum of six (6) hours; and (ii) the total duration of the nonconsecutive periods shall be a minimum of eighteen (18) hours.

   The well test requirements of this Order shall be suspended for any well shut-in for a period that continues for more than fifteen (15) days until the well commences production.

5. Applicant shall measure and market the commingled oil at a central tank battery described in Exhibit A in accordance with this Order and 19.15.18.15. NMAC or 19.15.23.8. NMAC.

6. Applicant shall measure and market the commingled gas at a well pad, central delivery point, central tank battery, or gas title transfer meter described in Exhibit A in accordance with this Order and 19.15.19.9. NMAC, provided however that if the gas is vented or flared, and regardless of the reason or authorization pursuant to 19.15.28.8 B. NMAC for such venting

or flaring, Applicant shall measure or estimate the gas in accordance with 19.15.28.8 E. NMAC.

7. Applicant shall calibrate the meters used to measure or allocate oil and gas production in accordance with 19.15.12.10 C.(2) NMAC.

8. If the commingling of oil and gas production from any pool, lease, or well reduces the value of the commingled oil and gas production to less than if it had remained segregated, no later than sixty (60) days after the decrease in value has occurred Applicant shall submit a new surface commingling application to OCD to amend this Order to remove the pool, lease, or well whose oil and gas production caused the decrease in value. If Applicant fails to submit a new application, this Order shall terminate on the following day, and if OCD denies the application, this Order shall terminate on the date of such action.

9. Applicant may submit an application to amend this Order to add pools, leases, and subsequently drilled wells with spacing units adjacent to or within the tracts commingled by this Order by submitting a Form C-107-B in accordance with 19.15.12.10 C.(4)(g) NMAC, provided the pools, leases, and subsequently drilled wells are within the identified parameters included in the Application.

10. If a well is not included in Exhibit A but produces from a pool and lease as described in Exhibit A, then Applicant shall submit Forms C-102 and C-103 to the OCD Engineering Bureau after the well has been approved to be drilled and prior to off-lease measuring or commingling oil or gas production from it with the production from another well. The Form C-103 shall reference this Order and identify the well, proposed method to determine the allocation of oil and gas production to it, and the location(s) that commingling of its production will occur.

11. Applicant shall not commence commingling oil or gas production from state, federal, or tribal leases until approved by the BLM or NMSLO, as applicable.

12. If OCD determines that Applicant has failed to comply with any provision of this Order, OCD may take any action authorized by the Oil and Gas Act or the New Mexico Administrative Code (NMAC).

13. OCD retains jurisdiction of this matter and reserves the right to modify or revoke this Order as it deems necessary.

**STATE OF NEW MEXICO**
**OIL CONSERVATION DIVISION**

Albert Chang

**DATE:** 12/20/2025

**ALBERT C. S. CHANG**
**DIRECTOR**

State of New Mexico
Energy, Minerals and Natural Resources Department

# Exhibit A

**Order:** PLC-652-B
**Operator:** XTO Permian Operating, LLC (373075)
**Central Tank Battery:** Big Eddy Unit DI 30 Central Tank Battery Train 1
**Central Tank Battery Location:** UL I, Section 15, Township 20 South, Range 31 East
**Gas Title Transfer Meter Location:** UL I, Section 15, Township 20 South, Range 31 East

## Pools

| Pool Name | Pool Code |
|---|---|
| WC WILLIAMS SINK; BONE SPRING | 97650 |
| WC 015-G07 2031S13 M WOLFCAMP | 98343 |

## Leases as defined in 19.15.12.7(C) NMAC

| Lease | UL or Q/Q | S-T-R |
|---|---|---|
| PA Bonespring NMNM 105693911 (068294T) | ALL | 15-20S-31E |
| | ALL | 16-20S-31E |
| | ALL | 17-20S-31E |
| | N2 | 20-20S-31E |
| | N2 | 21-20S-31E |
| | N2 | 22-20S-31E |
| BLM Lease NMNM 105507748 (NMLC 0063667) | E2, E2W2 | 15-20S-31E |
| BLM Lease NMNM 105509624 (NMLC 0070220) | W2W2 | 15-20S-31E |
| | W2W2 | 17-20S-31E |
| BLM Lease NMNM 105443675 (0004082) | E2, E2W2 | 17-20S-31E |
| | NW4, W2NE | 21-20S-31E |
| BLM Lease NMNM 105465561 (0001083) | N2 | 20-20S-31E |
| BLM Lease NMNM 105647601 (NMLC0065874A) | E2NE | 21-20S-31E |
| BLM Lease NMNM 105450686 (NMLC 0065944) | W2NW, W2NE | 22-20S-31E |
| BLM Lease NMNM 105462650 (NMLC 0065944A) | E2NW, E2NE | 22-20S-31E |
| SLO Lease B1-0621-0001 | SENE | 16-20S-31E |
| SLO Lease E0-0264-0007 | NE4, E2NW, SE4 | 16-20S-31E |
| SLO Lease E0-5230-0007 | W2NW, SW4 | 16-20S-31E |

## Wells

| Well API | Well Name | UL or Q/Q | S-T-R | Pool |
|---|---|---|---|---|
| 30-015-46199 | BIG EDDY UNIT 30E QUI GON #102H | S2 | 13-20S-31E | 97650 |
| | | S2 | 14-20S-31E | |
| 30-015-48159 | BIG EDDY UNIT 30E QUI-GON #103H | N2 | 23-20S-31E | 97650 |
| | | N2 | 24-20S-31E | |
| 30-015-46244 | BIG EDDY UNIT 30 REY #102H | S2S2 | 13-20S-31E | 97650 |
| | | S2S2 | 14-20S-31E | |
| 30-015-48156 | BIG EDDY UNIT 30E REY #103H | N2 | 23-20S-31E | 97650 |
| | | N2 | 24-20S-31E | |

| | | | | |
|---|---|---|---|---|
| 30-015-46194 | BIG EDDY UNIT 30E SKYWALKER #100H | N2<br>N2 | 13-20S-31E<br>14-20S-31E | 97650 |
| 30-015-46195 | BIG EDDY UNIT 30E SKYWALKER #101H | N2<br>N2 | 13-20S-31E<br>14-20S-31E | 97650 |
| 30-015-46933 | BIG EDDY UNIT 30E SKYWALKER #102H | N2<br>N2 | 13-20S-31E<br>14-20S-31E | 97650 |
| 30-015-46935 | BIG EDDY UNIT 30E SKYWALKER #103H | S2<br>S2 | 13-20S-31E<br>14-20S-31E | 97650 |
| 30-015-46937 | BIG EDDY UNIT 30E SKYWALKER #104H | N2<br>N2 | 23-20S-31E<br>24-20S-31E | 97650 |
| 30-015-46938 | BIG EDDY UNIT 30E SKYWALKER #105H | N2<br>N2 | 23-20S-31E<br>24-20S-31E | 97650 |
| 30-015-46196 | BIG EDDY UNIT 30E OBI WAN #102H | N2S2<br>N2S2 | 13-20S-31E<br>14-20S-31E | 97650 |

Sante Fe Main Office
Phone: (505) 476-3441

General Information
Phone: (505) 629-6116

Online Phone Directory
https://www.emnrd.nm.gov/ocd/contact-us

# State of New Mexico
# Energy, Minerals and Natural Resources
# Oil Conservation Division
# 1220 S. St Francis Dr.
# Santa Fe, NM 87505

CONDITIONS

Action 520321

## CONDITIONS

| | |
|---|---|
| Operator:<br>XTO PERMIAN OPERATING LLC.<br>6401 HOLIDAY HILL ROAD<br>MIDLAND, TX 79707 | OGRID:<br>373075 |
| | Action Number:<br>520321 |
| | Action Type:<br>[C-107] Surface Commingle or Off-Lease (C-107B) |

**CONDITIONS**

| Created By | Condition | Condition Date |
|---|---|---|
| sarah.clelland | Please review the content of the order to ensure you are familiar with the authorities granted and any conditions of approval. If you have any questions regarding this matter, please email us at OCD.Engineer@emnrd.nm.gov. | 12/23/2025 |