CASE NO.

7573

APPLICATION,
TRANSCRIPTS,
SMALL EXHIBITS,

ETC.

STATE OF NEW MEXICO
ENERGY AND MINERALS DEPARTMENT
OIL CONSERVATION DIVISION
STATE LAND OFFICE BLDG.
SANTA FE, NEW MEXICO
26 May 1982

EXAMINER HEARING

IN THE MATTER OF:

Application of Anadarko Production Company for a waterflood expansion, Eddy County, New Mexico. CASE 7573

BEFORE: Daniel S. Nutter

TRANSCRIPT OF HEARING

A P P E A R A N C E S

For the Oil Conservation Division:

W. Perry Pearce, Esq.
Legal Counsel to the Division
State Land Office Bldg.
Santa Fe, New Mexico 87501

For the Applicant:

MR. NUTTER: Call next Case Number 7573.

MR. PEARCE: That is the application of Anadarko Production Company for a waterflood expansion, Eddy County, New Mexico.

Mr. Examiner, we have received a request from the applicant in this matter that it be dismissed.

MR. NUTTER: Case Number 7573 will be dismissed.

(Hearing concluded.)

C E R T I F I C A T E

I, SALLY W. BOYD, C.S.R., DO HEREBY CERTIFY that the foregoing Transcript of Hearing before the Oil Conservation Division was reported by me; that the said transcript is a full, true, and correct record of the hearing, prepared by me to the best of my ability.

Sally W. Boyd CSR

I do hereby certify that the foregoing is a complete record of the proceedings in the Examiner hearing of Case No. 7578 heard by me on 4/26 1982.

_____, Examiner
Oil Conservation Division

SALLY W. BOYD, C.S.R.
Rt. 1 Box 193-B
Santa Fe, New Mexico 87501
Phone (505) 455-7409

STATE OF NEW MEXICO
ENERGY AND MINERALS DEPARTMENT
OIL CONSERVATION DIVISION
STATE LAND OFFICE BLDG.
SANTA FE, NEW MEXICO
12 May 1982

EXAMINER HEARING

IN THE MATTER OF:

Application of Anadarko Production Company for a waterflood project expansion, Eddy County, New Mexico. CASE 7573

BEFORE: Richard L. Stamets

TRANSCRIPT OF HEARING

A P P E A R A N C E S

For the Oil Conservation Division:

W. Perry Pearce, Esq.
Legal Counsel to the Division
State Land Office Bldg.
Santa Fe, New Mexico 87501

For the Applicant:

W. Thomas Kellahin, Esq.
KELLAHIN & KELLAHIN
500 Don Gaspar
Santa Fe, New Mexico 87501

MR. STAMETS: We'll call next Case 7573.

MR. PEARCE: That is the application of Anadarko Production Company for a waterflood expansion, Eddy County, New Mexico.

MR. KELLAHIN: If the Examiner please, we'd like to continue this case to the hearing on the 26th of May. We have some additional information we're trying to tabulate and we didn't complete by today's hearing.

MR. STAMETS: We will continue Case 7573 to the May 26th Examiner Hearing.

(Hearing concluded.)

C E R T I F I C A T E

I, SALLY W. BOYD, C.S.R., DO HEREBY CERTIFY that the foregoing Transcript of Hearing before the Oil Conservation Division was reported by me; that the said transcript is a full, true, and correct record of the hearing, prepared by me to the best of my ability.

Sally W. Boyd CSR

I do hereby certify that the foregoing is a complete record of the proceedings in the Examiner hearing of Case No. 7573, heard by me on 5-13 19 82

Richard L. Stamets, Examiner
Oil Conservation Division

SALLY W. BOYD, C.S.R.
Rt. 1 Box 193-B
Santa Fe, New Mexico 87501
Phone (505) 455-7409

STATE OF NEW MEXICO

ENERGY AND MINERALS DEPARTMENT

OIL CONSERVATION DIVISION

BRUCE KING
GOVERNOR

LARRY KEHOE
SECRETARY

POST OFFICE BOX 2088
STATE LAND OFFICE BUILDING
SANTA FE, NEW MEXICO 87501
(505) 827-2434

June 14, 1982

Re: CASE NO. 7573
ORDER NO. R-7001

Mr. Thomas Kellahin
Kellahin & Kellahin
Attorneys at Law
Post Office Box 1769
Santa Fe, New Mexico

Applicant:

Anadarko Production Company

Dear Sir:

Enclosed herewith are two copies of the above-referenced Division order recently entered in the subject case.

Yours very truly,

JOE D. RAMEY
Director

JDR/fd

Copy of order also sent to:

Hobbs OCD x
Artesia OCD x
Aztec OCD

Other

STATE OF NEW MEXICO
ENERGY AND MINERALS DEPARTMENT
OIL CONSERVATION DIVISION

IN THE MATTER OF THE HEARING
CALLED BY THE OIL CONSERVATION
DIVISION FOR THE PURPOSE OF
CONSIDERING:

CASE NO. 7573
Order No. R-7001

APPLICATION OF ANADARKO PRODUCTION
COMPANY FOR A WATERFLOOD EXPANSION,
EDDY COUNTY, NEW MEXICO.

ORDER OF THE DIVISION

BY THE DIVISION:

This cause came on for hearing at 9 a.m. on May 26, 1982, at Santa Fe, New Mexico, before Examiner Daniel S. Nutter.

NOW, on this 11th day of June, 1982, the Division Director, having considered the record and the recommendations of the Examiner, and being fully advised in the premises,

FINDS:

That the applicant's request for dismissal should be granted.

IT IS THEREFORE ORDERED:

That Case No. 7573 is hereby dismissed.

DONE at Santa Fe, New Mexico, on the day and year hereinabove designated.

STATE OF NEW MEXICO
OIL CONSERVATION DIVISION

JOE D. RAMEY,
Director

S E A L

Dockets Nos. 16-82 and 17-82 are tentatively set for June 9 and June 23, 1982. Applications for hearing must be filed at least 22 days in advance of hearing date.

DOCKET: EXAMINER HEARING - WEDNESDAY - MAY 26, 1982

9 A.M. - MORGAN HALL, STATE LAND OFFICE BUILDING,
SANTA FE, NEW MEXICO

The following cases will be heard before Daniel S. Nutter, Examiner, or Richard L. Stamets, Alternate Examiner:

CASE 7588: Application of Caulkins Oil Company for a non-standard gas proration unit, Rio Arriba County, New Mexico. Applicant, in the above-styled cause, seeks approval of a 320-acre non-standard gas proration unit for Blanco Mesaverde production, comprising the NW/4, N/2 NE/4, and N/2 SW/4 of Section 16, Township 26 North, Range 6 West.

CASE 7589: Application of BTA Oil Producers for a non-standard oil proration unit, Lea County, New Mexico. Applicant, in the above-styled cause, seeks approval of a 80-acre non-standard oil proration unit, Northeast Lovington Penn Pool, comprising the SE/4 NE/4 and the NE/4 SE/4 of Section 11, Township 16 South, Range 36 East, to be dedicated to a well to be drilled at a standard location thereon.

CASES 7554 and 7555: (Continued and Readvertised)

Application of Morris R. Antwell for compulsory pooling, Lea County, New Mexico. Applicant, in the above-styled cause, seeks an order pooling all mineral interests from the surface to the base of the Drinkard formation underlying the lands specified in each case to form a standard 40-acre oil proration unit, to be dedicated to a well to be drilled at a standard location thereon. Also to be considered will be the cost of drilling and completing said wells and the allocation of the cost thereof as well as actual operating costs and charges for supervision, designation of applicant as operator of the wells and a charge for risk involved in drilling said wells:

CASE 7554: NW/4 SW/4 Section 5, Township 20 South, Range 38 East

CASE 7555: SW/4 NW/4 Section 5, Township 20 South, Range 38 East

CASE 7590: Application of Consolidated Oil & Gas, Inc. for downhole commingling, San Juan County, New Mexico. Applicant, in the above-styled cause, seeks approval for the downhole commingling of Basin Dakota and Flora Vista-Gallup production in the wellbore of its Payne 1-E, located in Unit P, Section 35, Township 31 North, Range 13 West.

CASE 7519: (Continued from April 28, 1982, Examiner Hearing)

Application of S & J Oil Company for special pool rules, McKinley County, New Mexico. Applicant, in the above-styled cause, seeks the promulgation of special pool rules for the Seven Lakes-Menefee Oil Pool to provide for well to be located not nearer than 25 feet to the quarter-quarter section line nor nearer than 165 feet to lands owned by an offset operator.

CASE 7573: (Continued from May 12, 1982, Examiner Hearing)

Application of Anadarko Production Company for a waterflood expansion, Eddy County, New Mexico. Applicant, in the above-styled cause, seeks authority to expand its West Square Lake Waterflood Project by the conversion to water injection of five wells located in Units J and N of Section 9, D and H of Section 10, and J of Section 3, all in Township 17 South, Range 30 East.

CASE 7591: Application of Texaco, Inc. for a tertiary oil recovery project, Lea County, New Mexico. Applicant, in the above-styled cause, seeks authority to convert its Vacuum Grayburg-San Andres Pressure Maintenance Project to a polymer-augmented waterflood and, pursuant to Section 212.78 of the U. S. Dept. of Energy Regulations and Section 4993 of the Internal Revenue Code, seeks certification of said project as a qualified tertiary oil recovery project.

CASE 7592: Application of OXOCO for compulsory pooling, San Juan County, New Mexico. Applicant, in the above-styled cause, seeks an order pooling all mineral interests from the surface to the base of the Mesa Verde formation underlying the E/2 of Section 20, Township 32 North, Range 8 West, to be dedicated to a well to be drilled at a standard location thereon. Also to be considered will be the cost of drilling and completing said well and the allocation of the cost thereof as well as actual operating costs and charges for supervision, designation of applicant as operator of the well and a charge for risk involved in drilling said well.

CASE 7593: Application of Western Reserves Oil Company for compulsory pooling, Chaves County, New Mexico. Applicant, in the above-styled cause, seeks an order pooling all mineral interests from the surface through the Abo formation underlying the NW/4 of Section 30, Township 6 South, Range 25 East, to be dedicated to a well to be drilled at a standard location thereon. Also to be considered will be the cost of drilling and completing said well and the allocation of the cost thereof as well as actual operating costs and charges for supervision, designation of applicant as operator of the well and a charge for risk involved in drilling said well.

CASE 7562: (Continued from April 28, 1982, Examiner Hearing)

Application of Northwest Exploration Company for pool creation and special pool rules, Rio Arriba County, New Mexico. Applicant, in the above-styled cause, seeks the creation of a new Gallup-Dakota oil pool for its Gavilan Well No. 1 located in Unit A of Section 26, Township 25 North, Range 2 West, with special rules therefor, including provisions for 160-acre spacing.

CASE 7564: (Continued from April 28, 1982, Examiner Hearing)

Application of Mesa Petroleum Company for compulsory pooling, Chaves County, New Mexico. Applicant, in the above-styled cause, seeks an order pooling all mineral interests from the surface down through the Abo formation underlying the NW/4 of Section 30, Township 6 South, Range 25 East, to be dedicated to a well to be drilled at a standard location thereon. Also to be considered will be the cost of drilling and completing said well and the allocation of the cost thereof as well as actual operating costs and charges for supervision, designation of applicant as operator of the well and a charge for risk involved in drilling said well.

CASE 7582 thru 7585: (Continued from May 12, 1982, Examiner Hearing)

Application of Jack J. Grynberg for compulsory pooling, Chaves County, New Mexico. Applicant, in each of the following cases, seeks an order pooling all mineral interests down through the Abo formation underlying the lands specified in each case, each to form a standard 160-acre gas spacing and proration unit to be dedicated to a well to be drilled at a standard location thereon. Also to be considered will be the cost of drilling and completing said wells and the allocation of the cost thereof as well as actual operating costs and charges for supervision, designation of applicant as operator of the wells and a charge for risk involved in drilling said wells:

CASE 7582: NW/4 Section 13, Township 6 South, Range 24 East

CASE 7583: NE/4 Section 13, Township 6 South, Range 24 East

CASE 7584: SW/4 Section 13, Township 6 South, Range 24 East

CASE 7585: NW/4 Section 24, Township 6 South, Range 24 East

CASE 7594: Application of Harvey E. Yates Company for statutory unitization, Lea County, New Mexico. Applicant, in the above-styled cause, seeks an order unitizing, for the purposes of a secondary recovery project, all mineral interests in that portion of the Bone Spring formation described as the Carbonate unit between the first and second Bone Spring Sands underlying the Young Deep Unit, encompassing 560 acres, more or less, of Federal lands underlying portions of Sections 3, 4, 9 and 10, Township 18 South, Range 32 East.

CASE 7595: Application of Harvey E. Yates Company for a waterflood project, Lea County, New Mexico. Applicant, in the above-styled cause, seeks authority to institute a pilot waterflood project in the North Young-Bone Spring Pool by the injection of water into the perforated interval from 8444 feet to 8488 feet in its Young Deep Unit Well No. 2, located in Unit C of Section 10, Township 18 South, Range 32 East.

CASE 7445: (Continued from April 28, 1982, Examiner Hearing)

Application of Harvey E. Yates Company for an NGPA determination, Eddy County, New Mexico. Applicant, in the above-styled cause, seeks a new onshore reservoir determination in the San Andres formation for its Fulton Collier Well No. 1 in Unit G of Section 1, Township 18 South, Range 28 East.

CASE 7596: Application of Yates Drilling Company for statutory unitization, Eddy County, New Mexico. Applicant, in the above-styled cause, seeks an order unitizing, for the purposes of a secondary recovery project, all mineral interests in the interval described below underlying the Loco Hills (Grayburg) Unit, encompassing 1060 acres, more or less, of Federal lands underlying portions of Sections 19, 20, 29 and 30, Township 18 South, Range 29 East.

The unitized interval would be from the top of the Grayburg formation to a point 30 feet below the base of the Loco Hills Sand formation, being the interval from 2,272 feet to 2,429 feet in the Yates Alscott Federal Well No. 1 located in Unit A of said Section 30.

CASE 7597: Application of Yates Drilling Company for a waterflood project, Eddy County, New Mexico. Applicant, in the above-styled cause, seeks authority to institute a secondary recovery project on its South Loco Hills (Grayburg) Unit Area by the injection of water into the Grayburg formation through eight wells located in Sections 19, 20, 29, and 30, Township 18 South, Range 29 East.

CASE 7571: (Continued from May 12, 1982, Examiner Hearing)

Application of Yates Petroleum Corporation for compulsory pooling, Chaves County, New Mexico. Applicant, in the above-styled cause, seeks an order pooling all mineral interests from the surface through the Abo formation underlying the SE/4 of Section 9, the SW/4 of Section 10, the NW/4 of Section 15, all in Township 6 South, Range 26 East, each to form a standard 160-acre spacing and proration unit to be dedicated to a well to be drilled at a standard location thereon. Also to be considered will be the cost of drilling and completing said wells and the allocation of the cost thereof as well as actual operating costs and charges for supervision, designation of applicant as operator of the wells and a charge for risk involved in drilling said wells.

CASE 7598: Application of MWR Production Company and Yates Petroleum Corporation for designation of a tight formation in San Miguel, Torrance, Guadalupe, De Baca, Lincoln and Chaves Counties, New Mexico.

Pursuant to Section 107 of the Natural Gas Policy Act of 1978 and 18 CFR Section 271. 701-705, applicants, in the above-styled cause, seek the designation as a tight formation of the Abo formation underlying the following described lands in the above-named counties.

All of:

Townships 1 thru 4 North, Ranges 14 thru 27 East;

Townships 5 thru 11 North, Ranges 14 thru 26 East;

Township 1 South, Ranges 14 thru 27 East;

Townships 2 thru 5 South, Ranges 14 thru 21 East;

Townships 6 thru 11 South, Ranges 15 thru 21 East;

Township 12 South, Ranges 17 thru 21 1/2 East; and

Townships 13 and 14 South, Ranges 17 thru 21 East;

containing 5,168,563 acres, more or less, but excluding the not yet defined Capitan Wilderness Area.

Docket No. 13-82

Dockets Nos. 14-82 and 15-82 are tentatively set for May 26 and June 9, 1982. Applications for hearing must be filed at least 22 days in advance of hearing date.

DOCKET: EXAMINER HEARING - WEDNESDAY - MAY 12, 1982

9 A.M. - OIL CONSERVATION DIVISION CONFERENCE ROOM,
STATE LAND OFFICE BUILDING, SANTA FE, NEW MEXICO

The following cases will be heard before Richard L. Stamets, Examiner, or Daniel S. Nutter, Alternate Examiner:

ALLOWABLE: (1) Consideration of the allowable production of gas for June, 1982, from fifteen prorated pools in Lea, Eddy, and Chaves Counties, New Mexico.

(2) Consideration of the allowable production of gas for June, 1982, from four prorated pools in San Juan, Rio Arriba, and Sandoval Counties, New Mexico.

CASE 7540: (Continued and Readvertised)

In the matter of the hearing called by the Oil Conservation Division on its own motion to permit Pauly-Anderson-Pritchard, William H. Pauly, and all other interested parties to appear and show cause why the Maloy Well No. 1, located in Unit P, Section 16, Township 29 North, Range 11 West, San Juan County, should not be plugged and abandoned in accordance with a Division-approved plugging program.

CASE 7538: (Continued and Readvertised)

In the matter of the hearing called by the Oil Conservation Division on its own motion to permit Francis L. Harvey and all other interested parties to appear and show cause why the Pinkstaff Estate Well No. 2, located in Unit A, Section 29, Township 29 North, Range 10 West, San Juan County, should not be re-entered and plugged and abandoned in accordance with a Division-approved plugging program.

CASE 7566: In the matter of the hearing called by the Oil Conservation Division on its own motion to permit Flag-Redfern Oil Co., Principal, National Surety Corporation, and all other interested parties to appear and show cause why four wells, being the Julander No. 1 located in Unit L, Section 34; Julander No. 2 located in Unit I, Section 33; Hargis No. 1 located in Unit G, Section 33; and Hargis No. 2 located in Unit J, Section 33, all in Township 30 North, Range 12 West, San Juan County, should not be plugged and abandoned in accordance with a Division-approved plugging program.

CASE 7560: (Continued from April 28, 1982, Examiner Hearing)

In the matter of the hearing called by the Oil Conservation Division on its own motion to permit Charles E. Heisen, Fidelity and Deposit Company of Maryland, Surety, and all other interested parties to appear and show cause why the Crownpoint Well No. 1, located in Unit F, Section 18, Township 18 North, Range 13 West, McKinley County, should not be plugged and abandoned in accordance with a Division-approved plugging program.

CASE 7542: (Continued from April 14, 1982, Examiner Hearing)

In the matter of the hearing called by the Oil Conservation Division on its own motion to permit Benson-Montin-Greer Drilling Corporation, Hartford Accident and Indemnity Company, and all other interested parties to appear and show cause why the following wells: Dustin No. 1, located in Unit K, Section 6, and the Gallegos Campos Unit No. 2, located in Unit K, Section 35, both in Township 29 North, Range 12 West, and the Segal No. 1, located in Unit K, Section 10, and the Price No. 1, located in Unit N, Section 15, both in Township 31 North, Range 13 West, San Juan County, should not be plugged and abandoned in accordance with Division-approved plugging programs.

CASE 7567: Application of Harvey E. Yates Company for a unit agreement, Lea County, New Mexico. Applicant, in the above-styled cause, seeks approval for the Richardson Unit Area, comprising 1,283.35 acres, more or less, of State and Fee lands in Townships 13 and 14 South, Range 36 East.

CASE 7565: (Continued from April 28, 1982, Examiner Hearing)

Application of Delta Drilling Company for a unit agreement, Lea County, New Mexico. Applicant, in the above-styled cause, seeks approval for the North Mescalero Unit Area, comprising 719.77 acres, more or less, of State, Fee and Federal lands in Townships 9 and 10 South, Range 32 East.

CASE 7568: Application of Petroleum Corp. of Delaware for a dual completion, Eddy County, New Mexico. Applicant, in the above-styled cause, seeks approval for the dual completion of its Superior Federal Well No. 6 located in Unit N of Section 6, Township 20 South, Range 29 East, East Burton Flat Field, to produce oil from the Strawn formation through tubing and gas from the Morrow formation through the casing-tubing annulus by means of a cross-over assembly.

CASE 7569: Application of Petroleum Corp. of Delaware for downhole commingling, Eddy County, New Mexico. Applicant, in the above-styled cause, seeks approval for the downhole commingling of Atoka and Morrow production in the wellbores of its Parkway West Unit Well No. 3, located in Unit K of Section 29, and Well No. 10, located in Unit G of Section 27, both in Township 19 South, Range 29 East.

CASE 7570: Application of J. Cleo Thompson for three unorthodox oil well locations, Eddy County, New Mexico. Applicant, in the above-styled cause, seeks approval for three unorthodox well locations, being 660 feet from the North line and 1330 feet from the West line, 660 feet from the North line and 2630 feet from the East line, and 660 feet from the North line and 1310 feet from the East line, all in Section 2, Township 17 South, Range 30 East, Square Lake Pool.

CASE 7516: (Continued from March 31, 1982, Examiner Hearing)

Application of Benson-Montin-Greer for a unit agreement, Rio Arriba County, New Mexico. Applicant, in the above-styled cause, seeks approval for the North Canada Ojitos Unit Area, comprising 12,361 acres, more or less, of Jicarilla Apache Indian lands in Township 27 North, Range 1 West.

CASE 7571: Application of Yates Petroleum Corporation for compulsory pooling, Chaves County, New Mexico. Applicant, in the above-styled cause, seeks an order pooling all mineral interests from the surface through the Abo formation underlying the SE/4 of Section 9, the SW/4 of Section 10, the NW/4 of Section 15, all in Township 6 South, Range 26 East, each to form a standard 160-acre spacing and proration unit to be dedicated to a well to be drilled at a standard location thereon. Also to be considered will be the cost of drilling and completing said wells and the allocation of the cost thereof as well as actual operating costs and charges for supervision, designation of applicant as operator of the wells and a charge for risk involved in drilling said wells.

CASE 7551: (Continued from April 14, 1982, Examiner Hearing)

Application of Harvey E. Yates Company for compulsory pooling, Chaves County, New Mexico. Applicant, in the above-styled cause, seeks an order pooling all mineral interests in the Wolfcamp through Mississippian formations underlying the E/2 of Section 21, Township 11 South, Range 31 East, to be dedicated to a well to be drilled at a standard location thereon. Also to be considered will be the cost of drilling and completing said well and the allocation of the cost thereof as well as actual operating costs and charges for supervision, designation of applicant as operator of the well and a charge for risk involved in drilling said well.

CASE 7572: Application of Anadarko Production Company for a waterflood expansion, Eddy County, New Mexico. Applicant, in the above-styled cause, seeks authority to expand its Ballard GSA Waterflood Project by drilling and converting ten wells located in Unit N of Section 5, Units N and P of Section 6, Units F, H, J, and P of Section 7, Units F and N of Section 8, and Unit F of Section 17, all in Township 18 South, Range 29 East, Loco Hills Pool.

CASE 7573: Application of Anadarko Production Company for a waterflood expansion, Eddy County, New Mexico. Applicant, in the above-styled cause, seeks authority to expand its West Square Lake Waterflood Project by the conversion to water injection of five wells located in Units J and N of Section 9, D and H of Section 10, and J of Section 3, all in Township 17 South, Range 30 East.

CASE 7574: Application of Sun Exploration and Production Company for two non-standard gas proration units and an unorthodox location, Lea County, New Mexico. Applicant, in the above-styled cause, seeks approval of two 160-acre non-standard Jalmat gas proration units comprising the NW/4 of Section 21, for its Boren & Greer Com Well No. 2 in Unit C and the NE/4 of Section 20, for its Boren & Greer Com Well No. 3, to be drilled at an unorthodox location 660 feet from the North line and 940 feet from the East line of said Section 20, all in Township 22 South, Range 36 East. Applicant further seeks rescission of Order No. R-5688.

CASE 7575: Application of Eagle Oil & Gas Co. for an unorthodox gas well location, Eddy County, New Mexico. Applicant, in the above-styled cause, seeks approval for an unorthodox gas well location for a Wolfcamp-Penn test well to be drilled 1500 feet from the South line and 660 feet from the East line of Section 2, Township 17 South, Range 27 East, the S/2 of said Section 2 to be dedicated to the well.

CASES 7576 and 7577: Application of Apollo Oil Company for compulsory pooling, Lea County, New Mexico. Applicant, in each of the following cases, seeks an order pooling all mineral interests from the surface through the base of the San Andres formation underlying the lands specified in each case, each to form a standard 40-acre oil spacing and proration unit to be dedicated to a well to be drilled at a standard location thereon. Also to be considered will be the cost of drilling and completing said wells and the allocation of the cost thereof as well as actual operating costs and charges for supervision, designation of applicant as operator of the wells and a charge for risk involved in drilling said wells:

CASE 7576: NE/4 SW/4 Section 6, Township 19 South, Range 38 East

CASE 7577: SE/4 SW/4 Section 6, Township 19 South, Range 38 East

CASE 7578: Application of MGF Oil Corporation for compulsory pooling, Lea County, New Mexico. Applicant, in the above-styled cause, seeks an order pooling all mineral interests from the surface down through the Seven Rivers formation underlying the SE/4 of Section 31, Township 19 South, Range 39 East, to form a standard 160-acre gas proration unit to be dedicated to a well to be drilled at a standard location thereon. Also to be considered will be the cost of drilling and completing said well and the allocation of the cost thereof as well as actual operating costs and charges for supervision, designation of applicant as operator of the well and a charge for risk involved in drilling said well.

CASE 7579: Application of MGF Oil Corporation for compulsory pooling, Lea County, New Mexico. Applicant, in the above-styled cause, seeks an order pooling all mineral interests from the surface down through the Seven Rivers formation underlying the N/2 NW/4 of Section 5, Township 20 South, Range 39 East, to form a non-standard 80-acre gas proration unit to be dedicated to a well to be drilled at a standard location thereon. Also to be considered will be the cost of drilling and completing said well and the allocation of the cost thereof as well as actual operating costs and charges for supervision, designation of applicant as operator of the well and a charge for risk involved in drilling said well.

CASE 7580: Application of MGF Oil Corporation for compulsory pooling, Lea County, New Mexico. Applicant, in the above-styled cause, seeks an order pooling all mineral interests from the surface to the base of the Seven Rivers formation underlying the SW/4 of Section 31, Township 19 South, Range 39 East, to form a standard 160-acre gas proration unit to be dedicated to a well to be drilled at a standard location thereon. Also to be considered will be the cost of drilling and completing said well and the allocation of the cost thereof as well as actual operating costs and charges for supervision, designation of applicant as operator of the well and a charge for risk involved in drilling said well.

CASE 7581: Application of Estoril Producing Corp. for an unorthodox gas well location, Lea County, New Mexico. Applicant, in the above-styled cause, seeks approval for the unorthodox location of a well to be drilled 660 feet from the South line and 990 feet from the East line of Section 10, Township 23 South, Range 34 East, Antelope Ridge-Morrow Gas Pool, the S/2 of said Section 10 to be dedicated to the well.

CASES 7582 thru 7585: Application of Jack J. Grynberg for compulsory pooling, Chaves County, New Mexico. Applicant, in each of the following cases, seeks an order pooling all mineral interests down through the Abo formation underlying the lands specified in each case, each to form a standard 160-acre gas spacing and proration unit to be dedicated to a well to be drilled at a standard location thereon. Also to be considered will be the cost of drilling and completing said wells and the allocation of the cost thereof as well as actual operating costs and charges for supervision, designation of applicant as operator of the wells and a charge for risk involved in drilling said wells:

CASE 7582: NW/4 Section 13, Township 6 South, Range 24 East

CASE 7583: NE/4 Section 13, Township 6 South, Range 24 East

CASE 7584: SW/4 Section 13, Township 6 South, Range 24 East

CASE 7585: NW/4 Section 24, Township 6 South, Range 24 East

CASES 7525 thru 7534: (Continued from April 28, 1982, Examiner Hearing)

Application of Jack J. Grynberg for compulsory pooling, Chaves County, New Mexico. Applicant, in each of the following 10 cases, seeks an order pooling all mineral interests down through the Abo formation underlying the lands specified in each case, each to form a standard 160-acre gas spacing and proration unit to be dedicated to a well to be drilled at a standard location thereon. Also to be considered in each case will be the cost of drilling and completing said wells and the allocation of the cost thereof as well as actual operating costs and charges for supervision, designation of applicant as operator of the wells and a charge for risk involved in drilling said wells:

CASE 7525: SW/4 Section 3, Township 5 South, Range 24 East

CASE 7526: NW/4 Section 3, Township 5 South, Range 24 East

CASE 7527: SE/4 Section 3, Township 5 South, Range 24 East

CASE 7528: NW/4 Section 4, Township 5 South, Range 24 East

CASE 7529: NE/4 Section 4, Township 5 South, Range 24 East

CASE 7530: NW/4 Section 11, Township 6 South, Range 24 East

CASE 7531: SW/4 Section 11, Township 6 South, Range 24 East

CASE 7532: SE/4 Section 27, Township 6 South, Range 24 East

CASE 7533: SW/4 Section 27, Township 6 South, Range 24 East

CASE 7534: NW/4 Section 34, Township 6 South, Range 24 East

CASE 7515: (Continued from April 14, 1982, Examiner Hearing)

Application of Four Corners Gas Producers Association for designation of a tight formation, San Juan County, New Mexico. Applicant, in the above-styled cause, seeks the designation of the Dakota formation underlying all or portions of Townships 26 and 27 North, Ranges 12 and 13 West, Township 28 North, Range 13 West, Township 29 North, Ranges 13 through 15 West, and Township 30 North, Ranges 14 and 15 West, containing 164,120 acres, more or less, as a tight formation pursuant to Section 107 of the Natural Gas Policy Act and 18 CFR Section 271. 701-705.

CASE 7586: Application of Standard Resources Corp. for designation of a tight formation, Chaves and Eddy Counties, New Mexico. Applicant, in the above-styled cause, seeks the designation of the Abo formation underlying all or portions of Township 15 South, Ranges 23 through 25 East, Township 19 South, Range 20 East, and Township 20 South, Range 20 East, all in Chaves County; in Eddy County: Township 16 South, Ranges 23 through 26 East, Township 17 South, Ranges 21, 23, 24, and 25 East, and Township 18 South, Ranges 21, 23, 24 and 25 East, Township 19 South, Ranges 21, 23, and 24 East, and Township 20 South, Ranges 21, 23, and 24 East, containing 460,800 acres, more or less, as a tight formation pursuant to Section 107 of the Natural Gas Policy Act and 18 CFR Section 271. 701-705.

CASE 7587: In the matter of the hearing called by the Oil Conservation Division on its own motion for an order creating, abolishing, and extending vertical and horizontal limits of certain pools in Chaves, Eddy, and Lea Counties, New Mexico:

(a) CREATE a new pool in Lea County, New Mexico, classified as a gas pool for Wolfcamp production and designated as the Draper Mill-Wolfcamp Gas Pool. The discovery well is the HNG Oil Company Vaca Draw 16 State Well No. 1 located in Unit E of Section 16, Township 25 South, Range 33 East, NMPM. Said pool would comprise:

TOWNSHIP 25 SOUTH, RANGE 33 EAST, NMPM
Section 16: W/2

(b) CREATE a new pool in Lea County, New Mexico, classified as a gas pool for Morrow production and designated as the Jabalina-Morrow Gas Pool. The discovery well is the Amoco Production Company Perro Grande Unit Well No. 1 located in Unit J of Section 6, Township 26 South, Range 35 East, NMPM. Said pool would comprise:

TOWNSHIP 26 SOUTH, RANGE 35 EAST, NMPM
Section 6: E/2

(c) ABOLISH the Diamond Mound-Morrow Gas Pool in Chaves and Eddy Counties, New Mexico, as heretofore classified, defined, and described as:

TOWNSHIP 15 SOUTH, RANGE 27 EAST, NMPM
Section 35: All

TOWNSHIP 15 SOUTH, RANGE 28 EAST, NMPM
Section 31: E/2

TOWNSHIP 16 SOUTH, RANGE 28 EAST, NMPM
Section 3: Lots 1 through 16
Section 4: Lots 1 through 16
Section 5: Lots 1 through 16
Section 6: Lots, 1, 2, 7, 8, 9, 10, 15, 16, and S/2

(d) EXTEND the vertical limits of the Diamond Mound-Atoka Gas Pool in Chaves and Eddy Counties, New Mexico, to include the Morrow formation, and redesignate said pool to Diamond Mound-Atoka-Morrow Gas Pool, and extend the horizontal limits of said pool to include acreage from abolished Diamond Mound-Morrow Gas Pool and one additional well as follows:

TOWNSHIP 15 SOUTH, RANGE 27 EAST, NMPM
Section 35: All

TOWNSHIP 15 SOUTH, RANGE 28 EAST, NMPM
Section 31: E/2

TOWNSHIP 16 SOUTH, RANGE 27 EAST, NMPM
Section 9: S/2

TOWNSHIP 16 SOUTH, RANGE 28 EAST, NMPM
Section 3: Lots 1 through 16
Section 4: Lots 1 through 16
Section 5: Lots 1 through 16
Section 6: Lots 1, 2, 7, 8, 9, 10, 15, 16, and S/2

(e) EXTEND the Burton Flat-Strawn Gas Pool in Eddy County, New Mexico, to include therein:

TOWNSHIP 20 SOUTH, RANGE 28 EAST, NMPM
Section 35: E/2
Section 36: N/2

(f) EXTEND the Crow Flats-Morrow Gas Pool in Eddy County, New Mexico to include therein:

TOWNSHIP 17 SOUTH, RANGE 27 EAST, NMPM
Section 1: All
Section 12: N/2

(g) EXTEND the South Culebra Bluff-Atoka Gas Pool in Eddy County, New Mexico, to include therein:

TOWNSHIP 23 SOUTH, RANGE 28 EAST, NMPM
Section 10: All
Section 11: W/2
Section 14: W/2
Section 15: W/2
Section 34: W/2

(h) EXTEND the South Empire-Morrow Gas Pool in Eddy County, New Mexico, to include therein:

TOWNSHIP 17 SOUTH, RANGE 29 EAST, NMPM
Section 17: N/2

(i) EXTEND the Golden Lane-Strawn Gas Pool in Eddy County, New Mexico, to include therein:

TOWNSHIP 20 SOUTH, RANGE 30 EAST, NMPM
Section 28: All

(j) EXTEND the Kennedy Farms-Morrow Gas Pool in Eddy County, New Mexico, to include therein:-

TOWNSHIP 17 SOUTH, RANGE 26 EAST, NMPM
Section 10: N/2

(k) EXTEND the East LaRica-Morrow Gas Pool in Lea County, New Mexico, to include therein:

TOWNSHIP 18 SOUTH, RANGE 34 EAST, NMPM
Section 36: S/2

TOWNSHIP 18 SOUTH, RANGE 35 EAST, NMPM
Section 31: S/2

(l) EXTEND the Little Box Canyon-Morrow Gas Pool in Eddy County, New Mexico, to include therein:

TOWNSHIP 21 SOUTH, RANGE 22 EAST, NMPM
Section 18: E/2

(m) EXTEND the Malaga-Atoka Gas Pool in Eddy County, New Mexico, to include therein:

TOWNSHIP 24 SOUTH, RANGE 28 EAST, NMPM
Section 11: E/2

(n) EXTEND the South Millman-Morrow Gas Pool in Eddy County, New Mexico, to include therein:

TOWNSHIP 19 SOUTH, RANGE 28 EAST, NMPM
Section 16: N/2

(o) EXTEND the East Millman-Queen-Grayburg Pool in Eddy County, New Mexico, to include therein:

TOWNSHIP 19 SOUTH, RANGE 29 EAST, NMPM
Section 7: NE/4

(p) EXTEND the Millman Strawn Gas Pool in Eddy County, New Mexico, to include therein:

TOWNSHIP 19 SOUTH, RANGE 28 EAST, NMPM
Section 8: S/2

(q) EXTEND the West Nadine-Blinebry Pool in Lea County, New Mexico, to include therein:

TOWNSHIP 20 SOUTH, RANGE 38 EAST, NMPM
Section 5: SW/4

(r) EXTEND the West Osudo-Morrow Gas Pool in Lea County, New Mexico, to include therein:

TOWNSHIP 20 SOUTH, RANGE 35 EAST, NMPM
Section 11: S/2
Section 12: S/2

(s) EXTEND the Pecos Slope-Abo Gas Pool in Chaves County, New Mexico, to include therein:

TOWNSHIP 4 SOUTH, RANGE 24 EAST, NMPM

Section 24: S/2
Section 25: All
Section 26: E/2
Section 35: W/2 and NE/4
Section 36: N/2

TOWNSHIP 4 SOUTH, RANGE 25 EAST, NMPM
Section 19: SW/4
Section 30: W/2
Section 31: NW/4

TOWNSHIP 5 SOUTH, RANGE 24 EAST, NMPM
Section 2: NW/4
Section 7: All
Section 8: All
Section 9: N/2 and SW/4
Section 16: W/2
Section 17 thru 20: All
Section 21: W/2
Section 28: W/2
Section 29: All
Section 30: All
Section 31: N/2
Section 32: N/2
Section 33: NW/4

TOWNSHIP 5 SOUTH, RANGE 25 EAST, NMPM
Section 1 thru 5: All
Section 6: E/2
Section 7: SW/4 and E/2
Section 8 thru 12: All
Section 14 thru 22: All
Section 23: N/2
Section 27: N/2
Section 28 thru 30: All
Section 31: NE/4
Section 32: N/2
Section 33: All
Section 34: All

TOWNSHIP 6 SOUTH, RANGE 24 EAST, NMPM
Section 2: All
Section 11 thru 14: All
Section 22 thru 28: All
Section 34: E/2
Section 35: All
Section 36: All

TOWNSHIP 6 SOUTH, RANGE 26 EAST, NMPM
Section 4 thru 6: All
Section 7 thru 8: All
Section 9: N/2
Section 17 thru 20: All
Section 29 thru 32: All

TOWNSHIP 7 SOUTH, RANGE 24 EAST, NMPM
Section 1: All
Section 2: All
Section 3: E/2
Section 9 thru 15: All
Section 22 thru 27: All
Section 34 thru 36: All

TOWNSHIP 7 SOUTH, RANGE 25 EAST, NMPM
Section 6: W/2
Section 7: S/2
Section 13: SW/4
Section 14: S/2
Section 15: S/2
Section 18 and 19: All
Section 20: S/2
Section 22 thru 27: All
Section 29 thru 32: All
Section 34 thru 36: All

TOWNSHIP 7 SOUTH, RANGE 26 EAST, NMPM
Section 5: All
Section 6: All
Section 7 thru 10: All
Section 11: W/2
Section 15 thru 17: All
Section 18: N/2
Section 19 thru 22: All
Section 28 thru 32: All

TOWNSHIP 8 SOUTH, RANGE 24 EAST, NMPM
Section 1 through 3: All
Section 10: E/2
Section 11: All
Section 12: All

TOWNSHIP 8 SOUTH, RANGE 25 EAST, NMPM
Section 1 through 12: All
Section 13 through 16: N/2

TOWNSHIP 8 SOUTH, RANGE 26 EAST, NMPM
Section 6: W/2

(t) EXTEND the West Pecos Slope-Abo Gas Pool in Chaves County, New Mexico, to include therein:

TOWNSHIP 8 SOUTH, RANGE 22 EAST, NMPM
Section 23: SE/4
Section 24: S/2 and NE/4
Section 25 through 27: All
Section 28: E/2

TOWNSHIP 8 SOUTH, RANGE 23 EAST, NMPM
Section 3 through 5: All
Section 6: N/2
Section 8 through 10: N/2
Section 17: W/2
Section 18: SE/4
Section 19: All
Section 20: W/2
Section 29: W/2
Section 30: All
Section 31: All
Section 32: W/2

Docket No. 13-82

TOWNSHIP 9 SOUTH, RANGE 23 EAST, NMPM
Section 3: W/2
Section 4: All
Section 5: All
Section 6: E/2
Section 8: All

(u) EXTEND the East Red Lake-Queen-Grayburg Pool in Eddy County, New Mexico, to include therein:

TOWNSHIP 16 SOUTH, RANGE 28 EAST, NMPM
Section 25: E/2 NE/4 and NE/4 SE/4

(v) EXTEND the Sand Ranch-Morrow Gas Pool in Chaves County, New Mexico, to include therein:

TOWNSHIP 10 SOUTH, RANGE 29 EAST, NMPM
Section 26: All

(w) EXTEND the Sawyer-San Andres Associated Pool in Lea County, New Mexico, to include therein:

TOWNSHIP 10 SOUTH, RANGE 38 EAST, NMPM
Section 4: SW/4

(x) EXTEND the Tom-Tom-San Andres Pool in Chaves County, New Mexico, to include therein:

TOWNSHIP 8 SOUTH, RANGE 31 EAST, NMPM
Section 7: All

(y) EXTEND the Turkey Track-Morrow Gas Pool in Eddy County, New Mexico, to include therein:

TOWNSHIP 19 SOUTH, RANGE 29 EAST, NMPM
Section 2: W/2
Section 7: N/2

(z) EXTEND the Twin Lakes-San Andres Associated Pool in Chaves County, New Mexico, to include therein:

TOWNSHIP 8 SOUTH, RANGE 29 EAST, NMPM
Section 18: N/2 SE/4 and SE/4 SE/4

(aa) EXTEND the South Vacuum-Wolfcamp Pool in Lea County, New Mexico, to include therein:

TOWNSHIP 18 SOUTH, RANGE 35 EAST, NMPM
Section 16: SE/4

****

Docket No. 14-82

DOCKET: COMMISSION HEARING - MONDAY - MAY 17, 1982

OIL CONSERVATION COMMISSION - 9 A.M.
ROOM 205 - STATE LAND OFFICE BUILDING,
SANTA FE, NEW MEXICO.

CASE 7522: (DE NOVO)

Application of Santa Fe Exploration Co. for an unorthodox gas well location, Eddy County, New Mexico Applicant, in the above-styled cause, seeks approval of an unorthodox location 660 feet from the North and West lines of Section 14, Township 20 South, Range 25 East, Permo-Penn, Strawn, Atoka and Morrow formations, the N/2 of said Section 14 to be dedicated to the well.

Upon application of Chama Petroleum Company, this case will be heard De Novo pursuant to the provisions of Rule 1220.

Docket 14-82

CASE 7476: (DE NOVO)

Application of Jack J. Grynberg for compulsory pooling, Chaves County, New Mexico. Applicant, in the above-styled cause, seeks an order pooling all mineral interests down through and including the Abo formation, underlying two 160-acre gas spacing units, being the NE/4 and SE/4, respectively, of Section 12, Township 5 South, Range 24 East, each to be dedicated to a well to be drilled at a standard location thereon. Also to be considered will be the cost of drilling and completing said well and the allocation of the cost thereof as well as actual operating costs and charges for supervision, designation of applicant as operator of the well and a charge for risk involved in drilling said well.

Upon application of Mesa Petroleum Company, this case will be heard De Novo pursuant to the provisions of Rule 1220.

CASE 7513: (DE NOVO)

Application of Mesa Petroleum Company for compulsory pooling, Chaves County, New Mexico. Applicant, in the above-styled cause, seeks an order pooling all mineral interests in the Abo formation underlying the SE/4 of Section 12, Township 5 South, Range 24 East, to be dedicated to a well to be drilled at a standard location thereon. Also to be considered will be the cost of drilling and completing said well and the allocation of the cost thereof as well as actual operating costs and charges for supervision, designation of applicant as operator of the well and a charge for risk involved in drilling said well.

Upon application of Mesa Petroleum Company, this case will be heard De Novo pursuant to the provisions of Rule 1220.

KELLAHIN and KELLAHIN
Attorneys at Law
500 Don Gaspar Avenue
Post Office Box 1769
Santa Fe, New Mexico 87501

Jason Kellahin
W. Thomas Kellahin
Karen Aubrey

Telephone 982-4285
Area Code 505

April 20, 1982

Case 7573

Mr. Joe D. Ramey
Oil Conservation Division
P. O. Box 2088
Santa Fe, New Mexico 87501

Re: Anadarko Production Company
West Square Lake Waterflood
Eddy County, New Mexico

Dear Mr. Ramey:

The attached application seeks the authorization to convert five producers to injection in its West Square Lake Waterflood Project all located in Township 17 South Range 30 East as follows:

Loco Hills Federal B #5	Unit J Section 9
Loco Hills Federal B #7	Unit N Section 9
Federal R #3	Unit D Section 10
Federal R #8	Unit H Section 10
Federal KK #3	Unit J Section 3

Although its application will qualify for administrative approval (Order R-4830, R-4049, Administrative Order WFX-415) Anadarko requests that this case be set on the Examiner docket of May 12, 1982, in order to expedite approval.

Very truly yours,

W. Thomas Kellahin

WTK:rb
Enclosure
cc: Mr. Dan Kernaghan,
Anadarko Production Co.

STATE OF NEW MEXICO
ENERGY AND MINERALS DEPARTMENT

OIL CONSERVATION DIVISION
POST OFFICE BOX 2088
STATE LAND OFFICE BUILDING
SANTA FE, NEW MEXICO 87501

FORM C-108
Revised 7-1-81

Case 7573

APPLICATION FOR AUTHORIZATION TO INJECT

I. Purpose: [X] Secondary Recovery [ ] Pressure Maintenance [ ] Disposal [ ] Storage
Application qualifies for administrative approval? [X] yes [ ] no (Applicant requests hearing)

II. Operator: ANADARKO PRODUCTION COMPANY

Address: P. O. Box 2497, Midland, Texas 79702

Contact party: Dan Kernaghan Phone: 915-682-1666

III. Well data: Complete the data required on the reverse side of this form for each well proposed for injection. Additional sheets may be attached if necessary.

IV. Is this an expansion of an existing project? [X] yes [ ] no
If yes, give the Division order number authorizing the project R-4830 & 4049.

V. Attach a map that identifies all wells and leases within two miles of any proposed injection well with a one-half mile radius circle drawn around each proposed injection well. This circle identifies the well's area of review.

* VI. Attach a tabulation of data on all wells of public record within the area of review which penetrate the proposed injection zone. Such data shall include a description of each well's type, construction, date drilled, location, depth, record of completion, and a schematic of any plugged well illustrating all plugging detail.

VII. Attach data on the proposed operation, including:

1. Proposed average and maximum daily rate and volume of fluids to be injected;
2. Whether the system is open or closed;
3. Proposed average and maximum injection pressure;
4. Sources and an appropriate analysis of injection fluid and compatibility with the receiving formation if other than reinjected produced water; and
5. If injection is for disposal purposes into a zone not productive of oil or gas at or within one mile of the proposed well, attach a chemical analysis of the disposal zone formation water (may be measured or inferred from existing literature, studies, nearby wells, etc.).

*VIII. Attach appropriate geological data on the injection zone including appropriate lithologic detail, geological name, thickness, and depth. Give the geologic name, and depth to bottom of all underground sources of drinking water (aquifers containing waters with total dissolved solids concentrations of 10,000 mg/l or less) overlying the proposed injection zone as well as any such source known to be immediately underlying the injection interval.

IX. Describe the proposed stimulation program, if any.

* X. Attach appropriate logging and test data on the well. (If well logs have been filed with the Division they need not be resubmitted.)

* XI. Attach a chemical analysis of fresh water from two or more fresh water wells (if available and producing) within one mile of any injection or disposal well showing location of wells and dates samples were taken.

XII. Applicants for disposal wells must make an affirmative statement that they have examined available geologic and engineering data and find no evidence of open faults or any other hydrologic connection between the disposal zone and any underground source of drinking water.

XIII. Applicants must complete the "Proof of Notice" section on the reverse side of this form.

XIV. Certification

I hereby certify that the information submitted with this application is true and correct to the best of my knowledge and belief.

Name: W. Thomas Kellahin Title Attorneys for Applicant

Signature: W. Thomas Kellahin Date: 4/15/82

* If the information required under Sections VI, VIII, X, and XI above has been previously submitted, it need not be duplicated and resubmitted. Please show the date and circumstance of the earlier submittal.

DISTRIBUTION: Original and one copy to Santa Fe with one copy to the appropriate Division district office.

III. WELL DATA

A. The following well data must be submitted for each injection well covered by this application. The data must be both in tabular and schematic form and shall include:

(1) Lease name; Well No.; location by Section, Township, and Range; and footage location within the section.

(2) Each casing string used with its size, setting depth, sacks of cement used, hole size, top of cement, and how such top was determined.

(3) A description of the tubing to be used including its size, lining material, and setting depth.

(4) The name, model, and setting depth of the packer used or a description of any other seal system or assembly used.

Division District offices have supplies of Well Data Sheets which may be used or which may be used as models for this purpose. Applicants for several identical wells may submit a "typical data sheet" rather than submitting the data for each well.

B. The following must be submitted for each injection well covered by this application. All items must be addressed for the initial well. Responses for additional wells need be shown only when different. Information shown on schematics need not be repeated.

(1) The name of the injection formation and, if applicable, the field or pool name.

(2) The injection interval and whether it is perforated or open-hole.

(3) State if the well was drilled for injection or, if not, the original purpose of the well.

(4) Give the depths of any other perforated intervals and detail on the sacks of cement or bridge plugs used to seal off such perforations.

(5) Give the depth to and name of the next higher and next lower oil or gas zone in the area of the well, if any.

XIV. PROOF OF NOTICE

All applicants must furnish proof that a copy of the application has been furnished, by certified or registered mail, to the owner of the surface of the land on which the well is to be located and to each leasehold operator within one-half mile of the well location.

Where an application is subject to administrative approval, a proof of publication must be submitted. Such proof shall consist of a copy of the legal advertisement which was published in the county in which the well is located. The contents of such advertisement must include:

(1) The name, address, phone number, and contact party for the applicant;

(2) the intended purpose of the injection well; with the exact location of single wells or the section, township, and range location of multiple wells:

(3) the formation name and depth with expected maximum injection rates and pressures; and

(4) a notation that interested parties must file objections or requests for hearing with the Oil Conservation Division, P. O. Box 2088, Santa Fe, New Mexico 87501 within 15 days.

NO ACTION WILL BE TAKEN ON THE APPLICATION UNTIL PROPER PROOF OF NOTICE HAS BEEN SUBMITTED.

NOTICE: Surface owners or offset operators must file any objections or requests for hearing of administrative applications within 15 days from the date this application was mailed to them.

ANADARKO PRODUCTION COMPANY

WEST SQUARE LAKE WATERFLOOD PROJECT
EDDY COUNTY, NEW MEXICO

INDEX TO EXHIBITS

KELLAHIN and KELLAHIN
Attorneys at Law
500 Don Gaspar Avenue
Post Office Box 1769
Santa Fe, New Mexico 87501

Jason Kellahin
W. Thomas Kellahin
Karen Aubrey

Telephone 982-4285
Area Code 505

April 21, 1982

Dear Offset Operator or Surface Owner:

Our firm represents Anadarko Production Company before the New Mexico Oil Conservation Division.

Anadarko has filed the enclosed application for approval to add certain injection wells to its currently approved West Square Lake Waterflood Project, Eddy County, New Mexico.

In accordance with Division Rules we are required to notify all offset operators within a one-half mile radius of any injection well and surface owners at well locations of the pending application. A hearing on this application will be held on May 12, 1982.

If you have any objection to this application you are required by Division rules to file a written objection with the Division within fifteen (15) days of the date of this letter.

If you desire further information, please contact Ms. C. K. Stegall, Senior Reservoir Engineer, Anadarko, Midland, Texas (915) 682-1666.

Very truly yours,

W. Thomas Kellahin

WTK:rb
cc: Ms. C. K. Stegall
Enclosures:
Mailing List of Offset Operators
Application for Injection
Letter to OCD Identifying Injectors

ANADARKO PRODUCTION COMPANY

WEST SQUARE LAKE WATERFLOOD
EDDY COUNTY, NEW MEXICO

SURFACE OWNER

Bureau of Land Management
P. O. Box 1778
Carlsbad, New Mexico 88220

OFFSET OPERATORS WITHIN ONE-HALF MILE

Getty Oil Company
Box 1231
Midland, Texas 79702

Harlan Production Company
Box 668
Artesia, New Mexico 88210

Texas American Energy Corporation
300 Wall Street
Midland, Texas 79701

T. F. Welch

Gulf Oil Corporation
Box 2100
Houston, Texas 77001

Arco Oil & Gas
P. O. Box 1610
Midland, Texas 79702

Windfohr Oil Company
1214 First Nat'l. Bank Building
Fort Worth, Texas 76102

General American Oil
Company of Texas
Box 3306
Odessa, Texas 79760

Petro Search Exploration
Corporation
1700 S. Main Street
Borger, Texas 79007

J. C. Thompson
4500 Republic Nat'l. Bank Tower
Dallas, Texas 75201

Newmont Oil Company
600 Jefferson Street
Houston, Texas 77002

Boyd Operating Company
Box 1756
Roswell, New Mexico 88201

Union of Texas Petroleum
1300 Wilco Bldg.
Midland, Texas 79701

C. R. Inman
Box 2137
Midland, Texas 79702

STIMULATION PROGRAM

Each of the proposed injectors is to be acidized with approximately 100 gallons of acid per foot of old perforations and 200 gallons of acid per foot of new perforations. The approximate amount of acid to be used in each well is:

Loco Hills Federal "B" #5.....7200 gal.

Loco Hills Federal "B" #7.....9700 gal.

Loco Hills Federal "R" #3.....8000 gal.

Loco Hills Federal "R" #8.....8900 gal.

Loco Hills Federal "KK" #3.....10,100 gal.

DATA ON PROPOSED OPERATION

1. Proposed injection rates:
   a) Average daily rate - 200 bpd
   b) Maximum daily rate - 210 bpd
   c) Total monthly volume - 30,000 bbl on total project, approx. 6,000 per well on each proposed conversion.
2. Whether the system is open or closed: closed.
3. Proposed injection pressures: on new wells
   a) Average pressure - 1300 psi
   b) Maximum pressure - 1400 psi
4. Type of injection fluid: Mixture of fresh & produced water.

GEOLOGICAL DATA

1. Geologic name of injection zone:
   Grayburg Formation
2. Lithologic detail of injection zone:
   The formation is comprised of seven lenticular sand stringers: Loco Hills A&B, Middle Metex, Lower Metex A&B, Upper & Lower Premier.
3. Thickness of injection zone:
   a) Average thickness - 250'
   b) Range of thickness - 200' to 300'
4. Depth to injection zone:
   a) Average depth - 2700'
   b) Range of depth - 2580' to 2850'
5. Geologic name and depth to bottom of all underground sources of drinking water (TDS of 10,000 mg/l or less) overlying or immediately under injection zone:
   None Known.

Anadarko Production Company		Loco Hills "R" Federal		
WELL NO.	FOOTAGE LOCATION	SECTION	TOWNSHIP	RANGE
8		10	17S	30E

Schematic

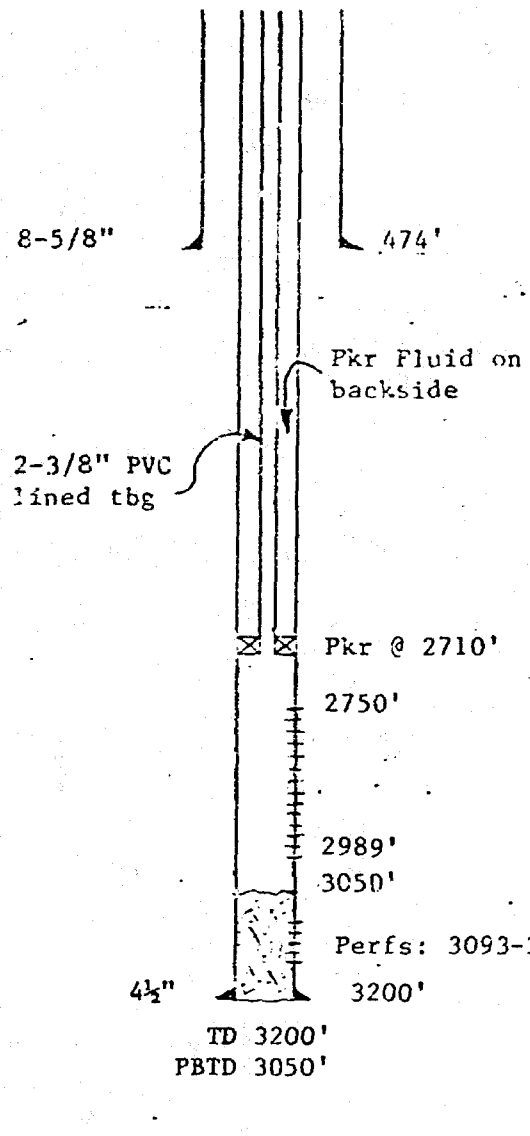

Tabular Data

Surface Casing

Size 8-5/8" Cemented with 150

TOC N/A feet determined by ---

Hole size 12¼"

Intermediate Casing

Size --- " Cemented with ---

TOC --- feet determined by ---

Hole size ---

Long string

Size 4½ " Cemented with 350

TOC N/A feet determined by ---

Hole size 7-7/8"

Total depth 3200'

Injection interval

±2750 feet to 2989 feet, perforate
(perforated or open-hole, indicate which)

Perfs: 3093-3120', to be blocked by plugging back w/hydromite.

Tubing size 2-3/8" lined with Salta PVC (material) set in a Watson Type S or Guiberson Uni-I (brand and model) packer at ±2710 feet.
(or describe any other casing tubing seal).

Other Data

1. Name of the injection formation Grayburg
2. Name of Field or Pool (if applicable) Square Lake
3. Is this a new well drilled for injection? [ ] Yes [X] No
   If no, for what purpose was the well originally drilled? Oil producer
4. Has the well ever been perforated in any other zone(s)? List all such perforated intervals and give plugging detail (sacks of cement or bridge plug(s) used)
   Lovington perfs: 3093-3100, 3104-12, 3116-20, @ 2 spf, to be plugged back with hydromite to ±3050'.
5. Give the depth to and name of any overlying and/or underlying oil or gas zones (pools) in this area.
   [illegible] (±1750), [illegible] (±2100), [illegible] (±3100), Jackson (±3250).

Anadarko Production Company	Loco Hills "B" Federal		
WELL NO. / FOOTAGE LOCATION	SECTION	TOWNSHIP	RANGE
7	9	17S	30E

Schematic

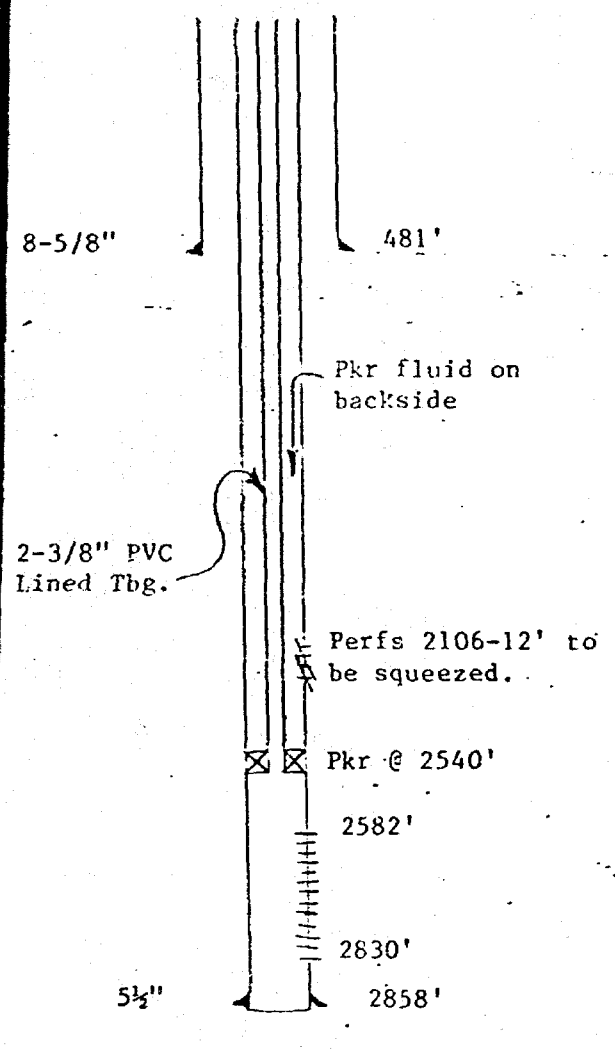

Tabular Data

Surface Casing

Size 8-5/8" Cemented with 150 sx

TOC N/A feet determined by ---

Hole size 12¼"

Intermediate Casing

Size --- " Cemented with --- sx

TOC --- feet determined by ---

Hole size ---

Long string

Size 5½ " Cemented with 450 sx

TOC N/A feet determined by ---

Hole size 7-7/8"

Total depth 2859'

Injection interval

2582 feet to 2830 feet, perforated
(perforated or open-hole, indicate which)

Tubing size 2-3/8" lined with Salta PVC (material) set in a Watson Type S or Guiberson Uni-I (brand and model) packer at ±2540 feet.

(or describe any other casing-tubing seal).

Other Data

1. Name of the injection formation Grayburg
2. Name of Field or Pool (if applicable) Grayburg Jackson
3. Is this a new well drilled for injection? [ ] Yes [X] No

   If no, for what purpose was the well originally drilled? Oil Producer

4. Has the well ever been perforated in any other zone(s)? List all such perforated intervals and give plugging detail (sacks of cement or bridge plug(s) used)

   Well is perforated in Queen (perfs:2106'-12'), to be squeezed on conversion w/approximately 75 sacks.

5. Give the depth to and name of any overlying and/or underlying oil or gas zones (pools) in this area.

   [illegible] (±[illegible]'), [illegible] (±2100'), [illegible] (±2100'), [illegible] (±3,[illegible]').

Anadarko Production Company	Loco Hills "KK" Federal		
WELL NO. FOOTAGE LOCATION	SECTION	TOWNSHIP	RANGE
3	3	17S	30E

Schematic

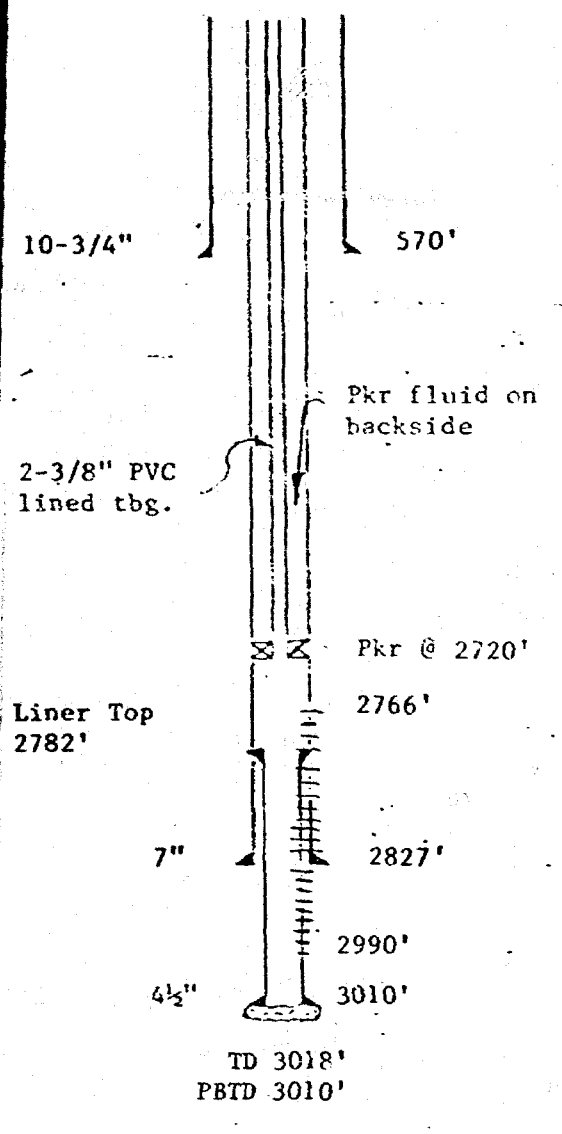

Tabular Data

Surface Casing

Size 10-3/4" Cemented with 50 s

TOC N/A feet determined by ---

Hole size N/A

Intermediate Casing

Size 7" Cemented with 100

TOC ±2576 feet determined by calculated

Hole size N/A

~~XXXXXXXXXX~~ Liner

Size 4½" Cemented with 100 s

TOC Top of liner feet determined by Temp. Survey

~~XXXXXXXXX~~ Liner set from 2782'-3010'.

Total depth 3018'

Injection interval

±2765 feet to 2990 feet, perforate

(perforated or open-hole, indicate which)

Tubing size 2-3/8" lined with Salta PVC (material) set in a Watson Type S or Guiberson Uni-I (brand and model) packer at ±2720 feet.

(or describe any other casing-tubing seal).

Other Data

1. Name of the injection formation Grayburg (Includes Loco Hills, Metex, Premier)

2. Name of Field or Pool (if applicable) Square Lake

3. Is this a new well drilled for injection? [ ] Yes [X] No

   If no, for what purpose was the well originally drilled? Oil producer

4. Has the well ever been perforated in any other zone(s)? List all such perforated intervals and give plugging detail (sacks of cement or bridge plug(s) used)

   NO

5. Give the depth to and name of any overlying and/or underlying oil or gas zones (pools) in this area.

   [illegible], [illegible] ([illegible]'), [illegible] ([illegible]'), Jackson ([illegible]').

Anadarko Production Company — Loco Hills "R" Federal

WELL NO.	FOOTAGE LOCATION	SECTION	TOWNSHIP	RANGE
3	330' FNL & FWL	10	17S	30E

Schematic

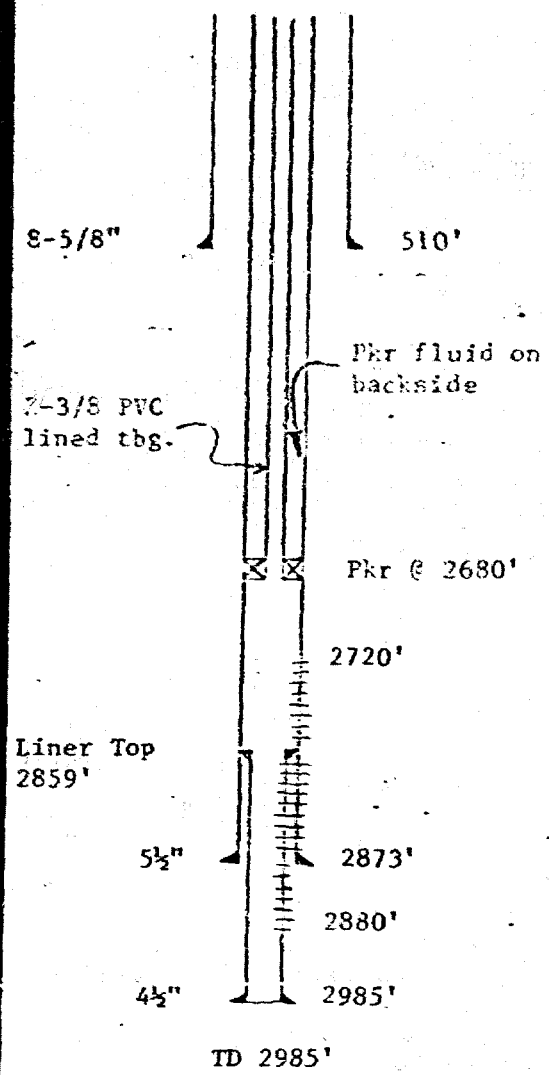

Tabular Data

Surface Casing

Size 8-5/8" Cemented with 75 s

TOC N/A feet determined by ---

Hole size N/A

Intermediate Casing

Size 5½" Cemented with 100 s

TOC N/A feet determined by ---

Hole size N/A

~~XXXXXXXXXX~~ Liner

Size 4½" Cemented with 40 s

TOC N/A feet determined by ---

~~XXXXXXXXXX~~ Liner set from 2859' to 2985'

Total depth 2985'

Injection interval

±2720 feet to ±2880 feet, perforate
(perforated or open-hole, indicate which)

Tubing size 2-3/8" lined with Salta PVC (material) set in a Watson Type S or Guiberson Uni-I (brand and model) packer at ±2680 feet.

(or describe any other casing-tubing seal).

Other Data

1. Name of the injection formation Grayburg
2. Name of Field or Pool (if applicable) Square Lake
3. Is this a new well drilled for injection? [ ] Yes [X] No

   If no, for what purpose was the well originally drilled? Oil producer

4. Has the well ever been perforated in any other zone(s)? List all such perforated intervals and give plugging detail (sacks of cement or bridge plug(s) used)

   NO

5. Give the depth to and name of any overlying and/or underlying oil or gas zones (pools) in this area.

Anadarko Production Company	Loco Hills "3" Federal			
WELL NO.	FOOTAGE LOCATION	SECTION	TOWNSHIP	RANGE
5	1980'FSL & FEL	9	17S	30E

Schematic

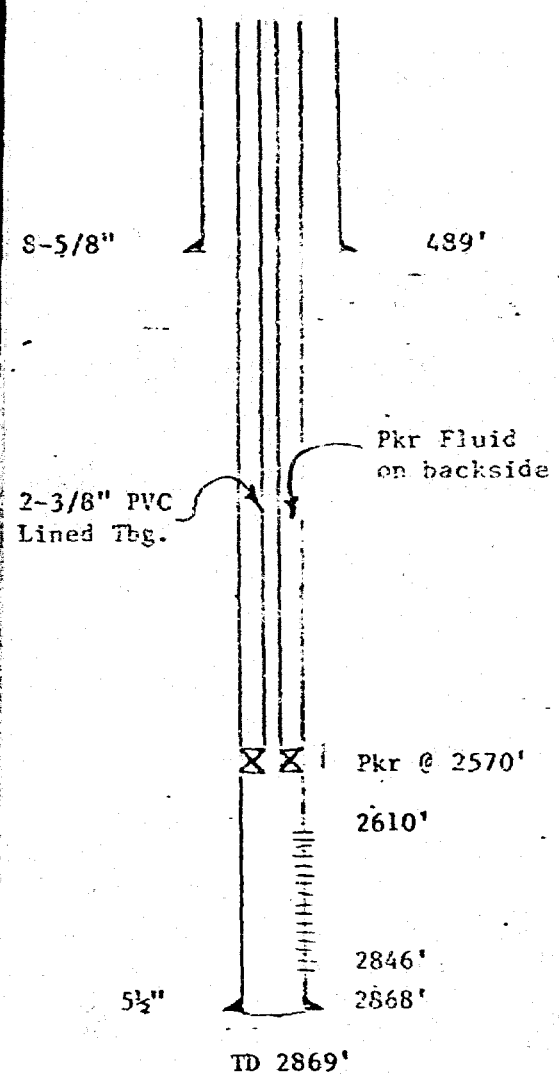

Tabular Data

Surface Casing

Size 8-5/8" Cemented with 150 s

TOC N/A feet determined by ---

Hole size 12-1/4"

Intermediate Casing

Size None" Cemented with --- s

TOC --- feet determined by ---

Hole size ---

Long string

Size 5-1/2" Cemented with 450 s

TOC N/A feet determined by ---

Hole size 7-7/8"

Total depth 2869'

Injection interval

2610 feet to 2846 feet, perforate
(perforated or open-hole, indicate which)

Tubing size 2-3/8" lined with Salta PVC Lining (material) set in a Watson Type S or Guiberson Uni-I Injection (brand and model) packer at ± 2570 feet.

(or describe any other casing-tubing seal).

Other Data

1. Name of the injection formation Grayburg
2. Name of Field or Pool (if applicable) Grayburg Jackson
3. Is this a new well drilled for injection? [ ] Yes [X] No

   If no, for what purpose was the well originally drilled? Oil producer

4. Has the well ever been perforated in any other zone(s)? List all such perforated intervals and give plugging detail (sacks of cement or bridge plug(s) used)

   No

5. Give the depth to and name of any overlying and/or underlying oil or gas zones (pools) in this area.

Reiger "Cb" Federal
NTC-B #3
Plugged & Abandoned
(Gulf Oil Corp., Operator)

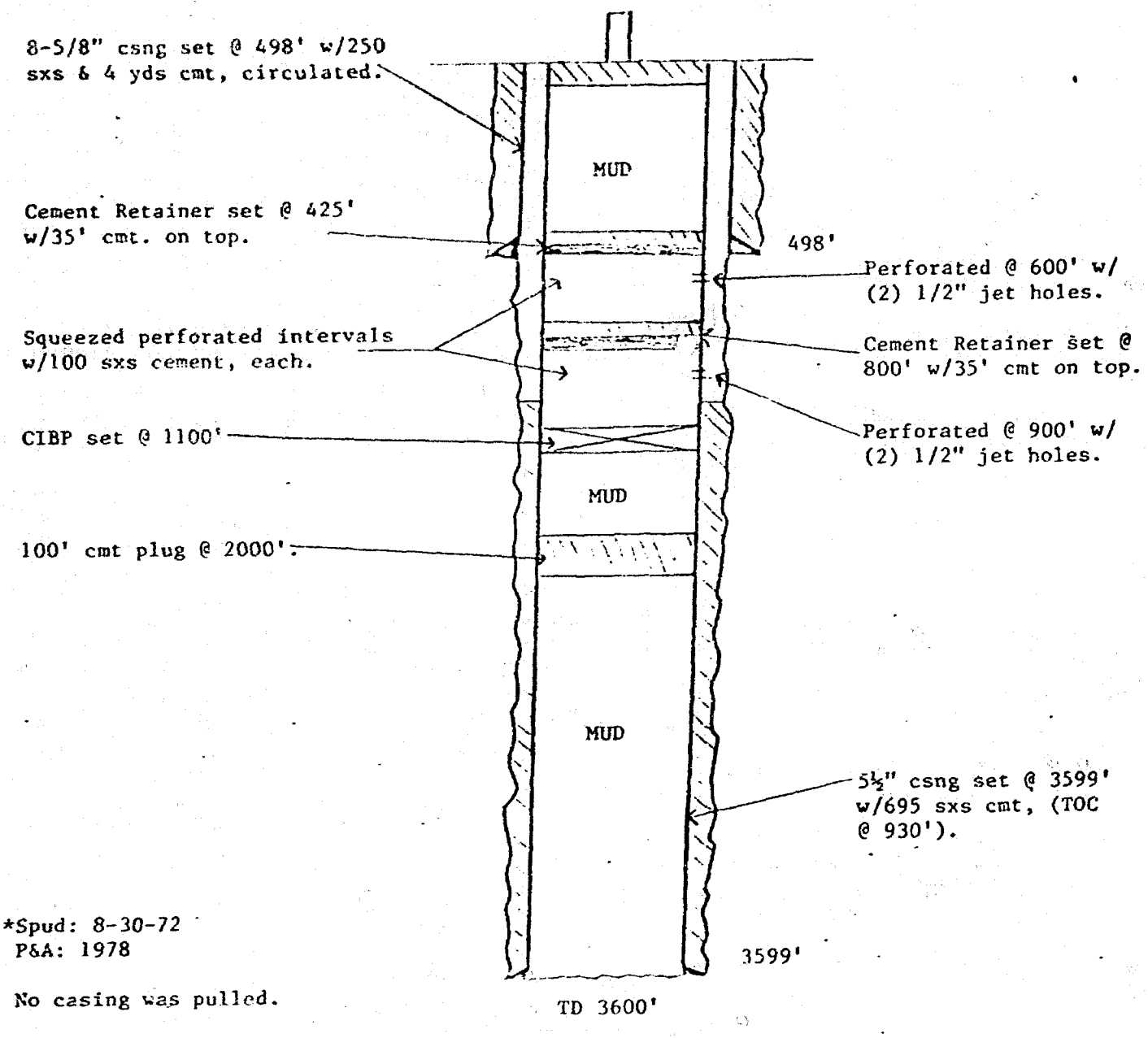

*Spud: 8-30-72
P&A: 1978

No casing was pulled.

660'FSL & 660'FWL
Unit M, Section 9,
T17S, R30E

Gissler "b" #3
Plugged & Abandoned
(Flynn, etal., Operator)

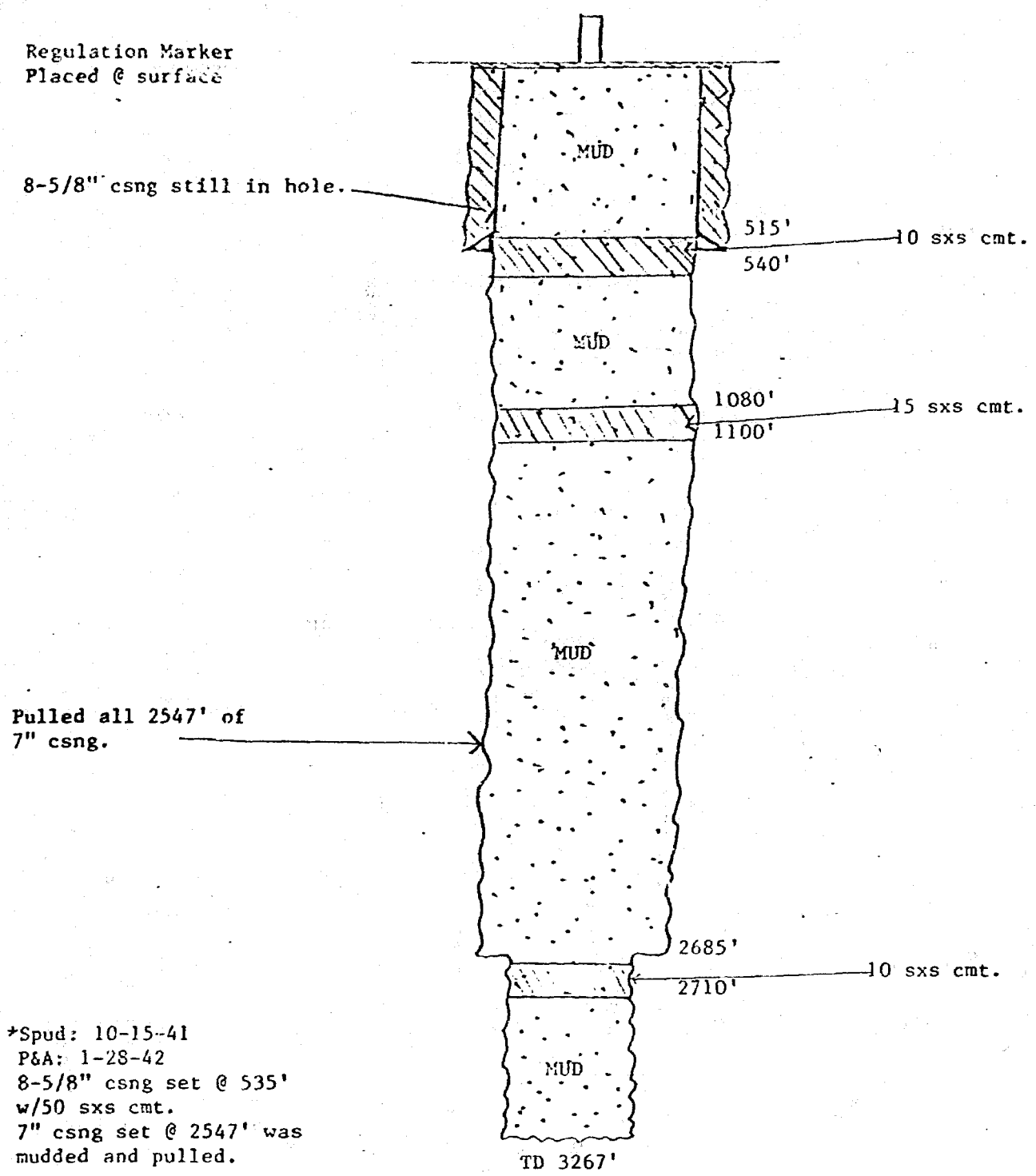

*Spud: 10-15-41
P&A: 1-28-42
8-5/8" csng set @ 535'
w/50 sxs cmt.
7" csng set @ 2547' was
mudded and pulled.

330'FSL & 330'FEL
Unit P, Section 8,
T17S, R30E

Plugged & Abandoned
(Repollp Oil Co., Operator)

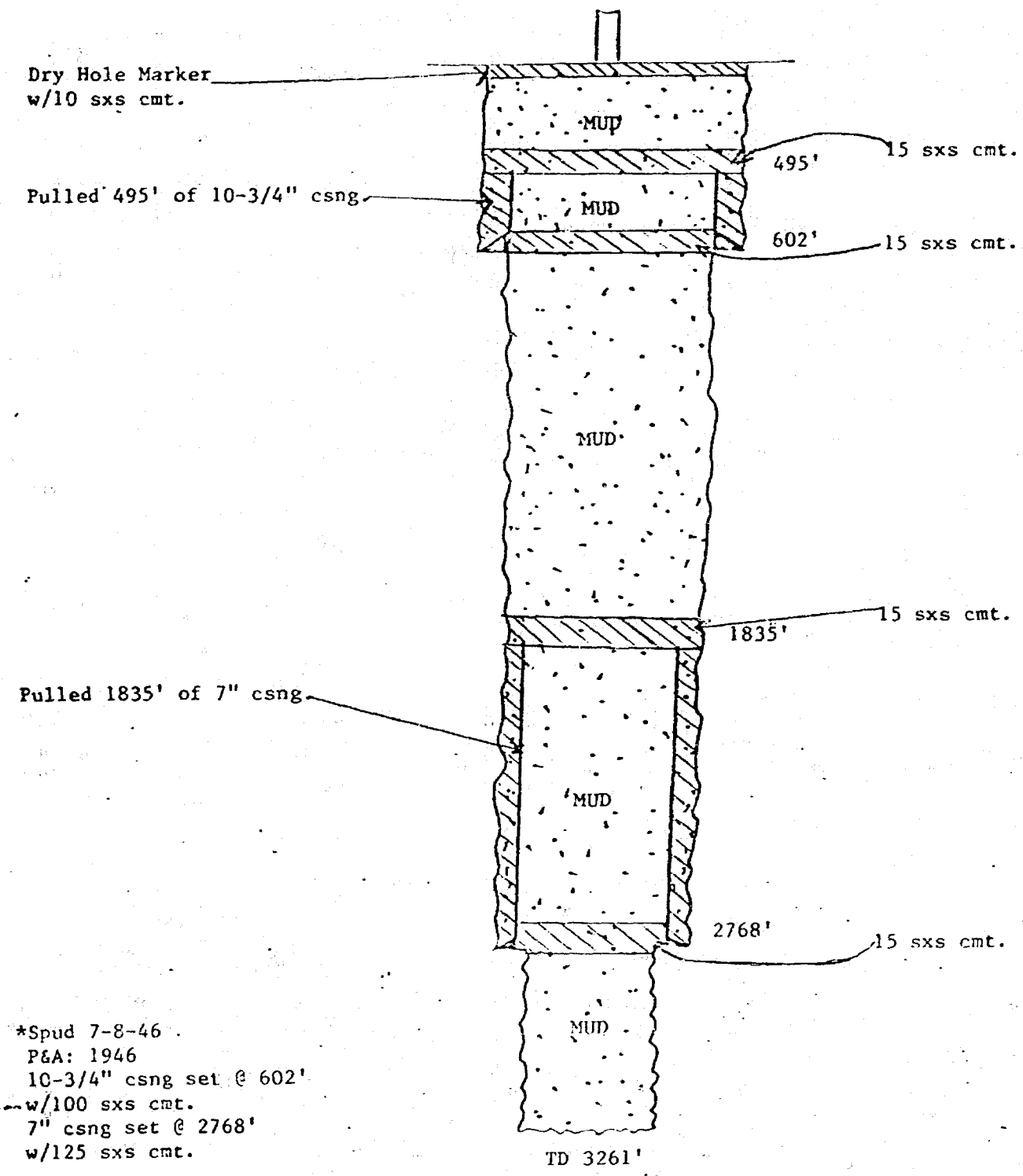

*Spud 7-8-46
P&A: 1946
10-3/4" csng set @ 602'
w/100 sxs cmt.
7" csng set @ 2768'
w/125 sxs cmt.

660'FNL & 1980'FEL
Unit B, Section 9,
T17S, R30E

Plugged & Abandoned
(T.F. Welch, Operator)

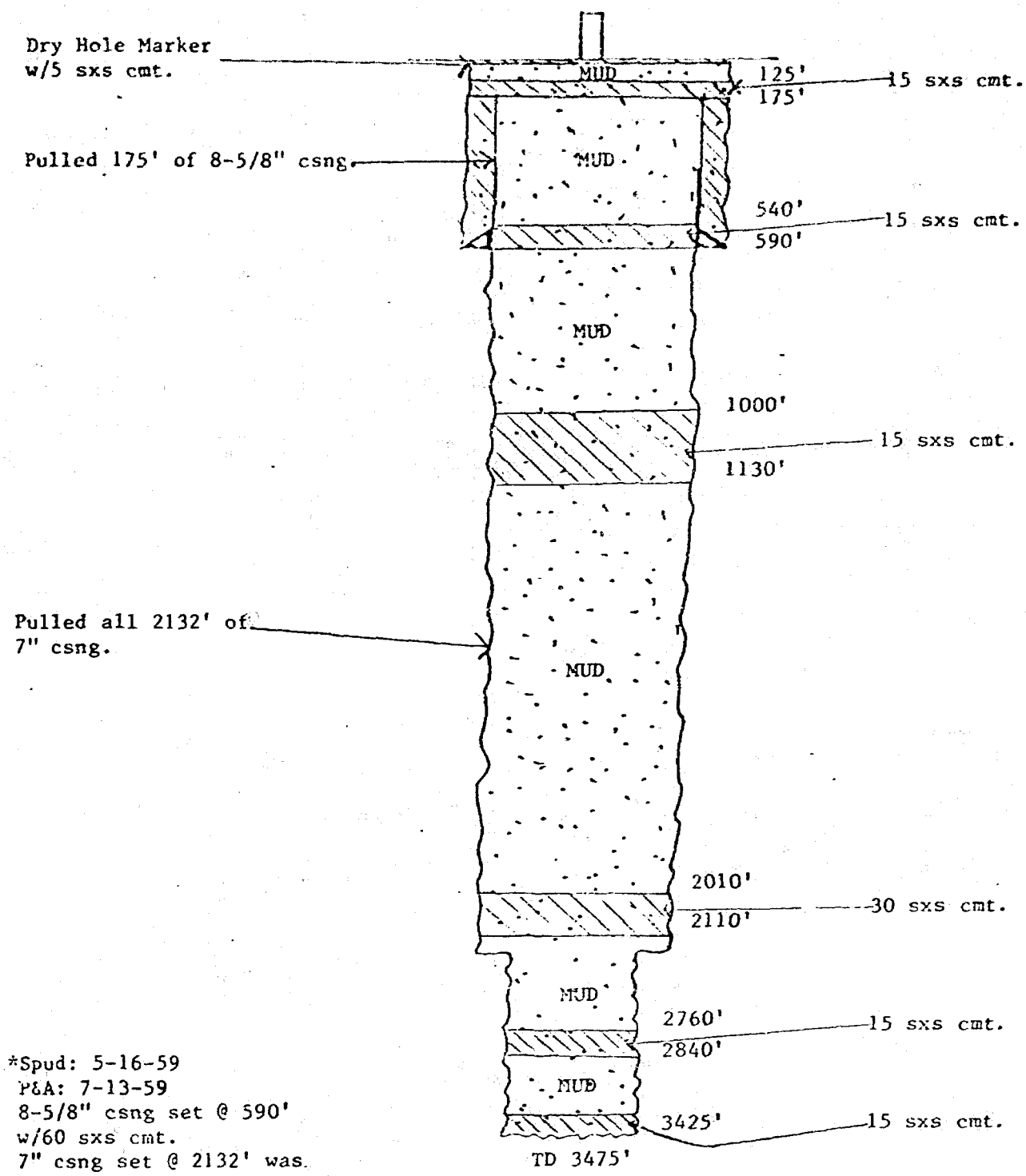

*Spud: 5-16-59
P&A: 7-13-59
8-5/8" csng set @ 590'
w/60 sxs cmt.
7" csng set @ 2132' was
mudded and pulled.

330'FSL & 330'FWL
Unit M, Section 9,
T17S, R30E.

MIDLAND, TEXAS 79703

DATE

COMPANY

REPRESENTATIVE

COMPANY Andarko

ADDRESS

LOCATION

WELL NO 6-15 LEASE Federal A

TIME		TIME	TEST DATA RATE	PRESSURE	VOLUME
DEPART SHOP	6:00				
ARRIVE LEASE	9:55	9:00		1290	2
START TEST	9:20	10:00		1260	
COMPLETE TEST	12:00	11:00		1255	
DEPART LEASE	12:30	12:00			
ARRIVE SHOP	4:00	1:00			
DRIVING TIME	5 hrs	2:30			
TESTING TIME	2.5 hrs				
T. MILEAGE	394				
TOTAL FLUID INJECTED PRIOR TO TESTING					TOTAL

BILLING 5 hr min
5 hrs @ [illegible]
394 mi @ .05 ea

TOTAL CHARGE THIS TEST $525.00

DATE OF LAST TEST

I.D. PERF

PACKER

BOTTOM

CSG. SIZE

TUB SIZE

WATER WEIGHT #GAL.

PSI

FRAC POINT

PSI

BPD

BPD

PST

G FOOT I.I.

DESCRIPTION OF WORK Had to stop test @ 1000 psi because engine quit. Had to shut down and service unit. Had to start test @ 1000 psi. Also to [illegible] on the line pressure @ 1000 psi.

NOTE: WELL WAS SUPPOSE TO BE ON VACUUM

TESTER

COMPANY REPRESENTATIVE

COMPANY [illegible] DATE [illegible]

ADDRESS _____ COMPANY REPRESENTATIVE _____

WELL # 2 16 LEASE Federal A LOCATION _____

TIME		TEST DATA			
		TIME	RATE	PRESSURE	VOLUME
DEPART SHOP	6 20	0.00	200	1530	12:44
ARRIVE LEASE	8 36	10:30	400	1565	[illegible]
START TEST	9:30	11:30	600	1630	[illegible]
COMPLETE TEST	2:30	12:30	800	1760	13071
		1:30	1000	1870	13062
DEPART LEASE	3:00	2:30	1200	1850	
ARRIVE SHOP	5:20				
DRIVING TIME	5.5 hrs				
TESTING TIME	5				
T. MILEAGE	295				

TOTAL _____

TOTAL FLUID INJECTED PRIOR TO TESTING _____

BILLING 8 hr min @ 400.00
5.5 hrs @ 150.00
295 mi @ 2.25 = 663.75

DATE OF LAST TEST _____
PERF _____
PACKER _____
BOTTOM _____
TOTAL CHARGE THIS TEST $528.75
SIZE _____
SIZE _____
WEIGHT _____ #GAL. FRAC POINT 1775 PSI 865 BPD
PSI BPD
FOOT I.I. _____ PST

DESCRIPTION OF WORK _____

MASTER _____ COMPANY REPRESENTATIVE [illegible]

STEP RATE TEST

COMPANY
WELL
FIELD
DATE

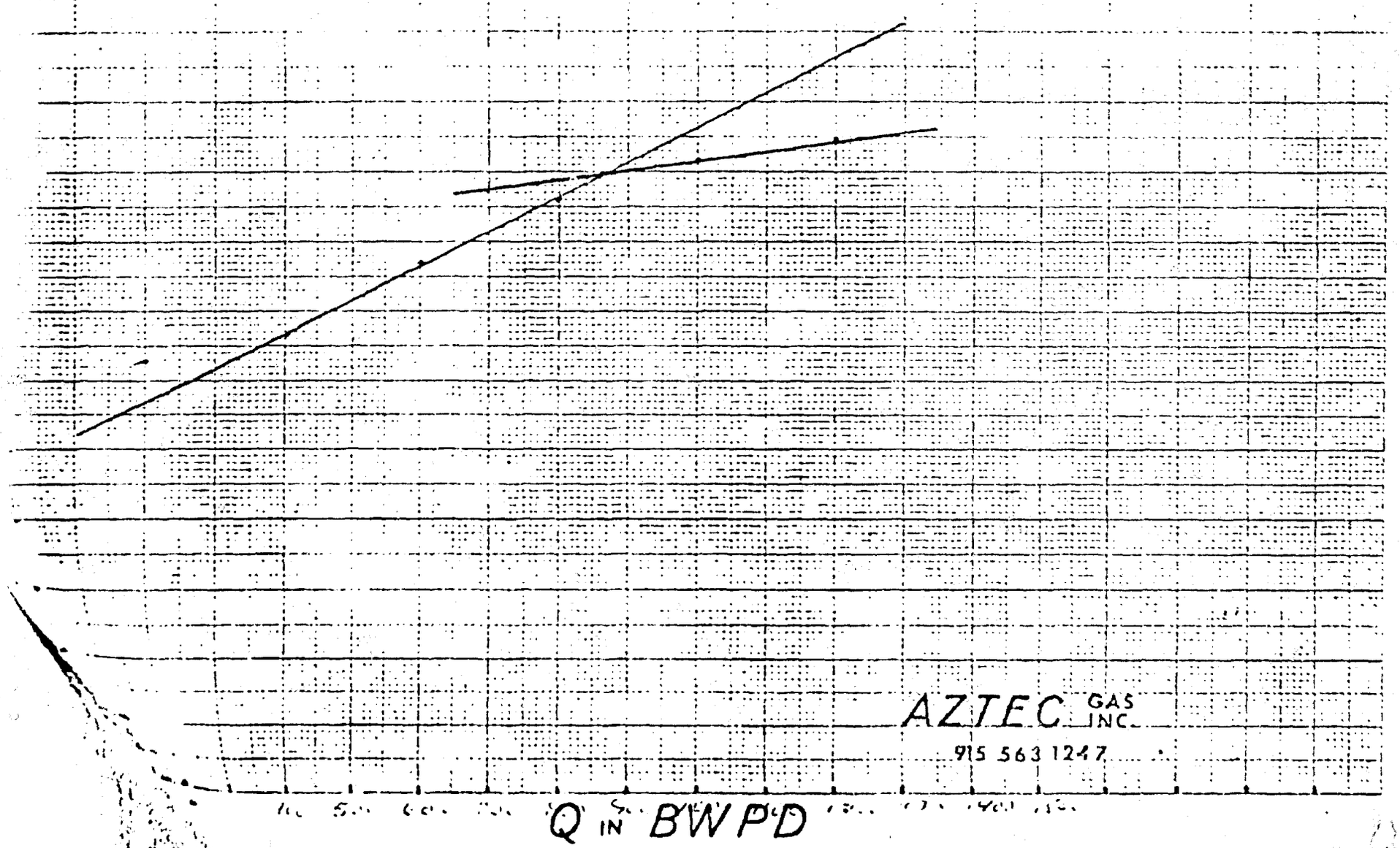

-651-2743

PANY Anadarko

DATE 3-21-79

COMPANY REPRESENTATIVE

DRESS

L # 4 LEASE Federal R LOCATION

TIME

PART SHOP 7:30

RIVE LEASE 9:35

ART TEST 10:00

PLETE TEST 4:00

PART LEASE 4:35

RIVE SHOP 6:30

IVING TIME 4.10

STING TIME 6

. MILEAGE 295

TEST DATA

TIME	RATE	PRESSURE	VOLUME
10:00	-	1670	13108
11:00	400	1640	13121
12:00	600	1700	13148
1:00	800	1755	13180
2:00	1000	1815	13218
3:00	1200	1840	
4:00	1400	1[illegible]	

TOTAL

TAL FLUID INJECTED PRIOR TESTING

BILLING 8 hr min. 400
4.1 hr @ [illegible]
295 [illegible] 254.75

TE OF LAST TEST

D. PERF

PACKER

BOTTOM

2. SIZE

3 SIZE

TER WEIGHT °CAL. FRAC POINT PSI BPD

PSI BPD

FOOT I.I. PST

TOTAL CHARGE THIS TEST $514.75

SCRIPTION OF WORK

STER COMPANY REPRESENTATIVE

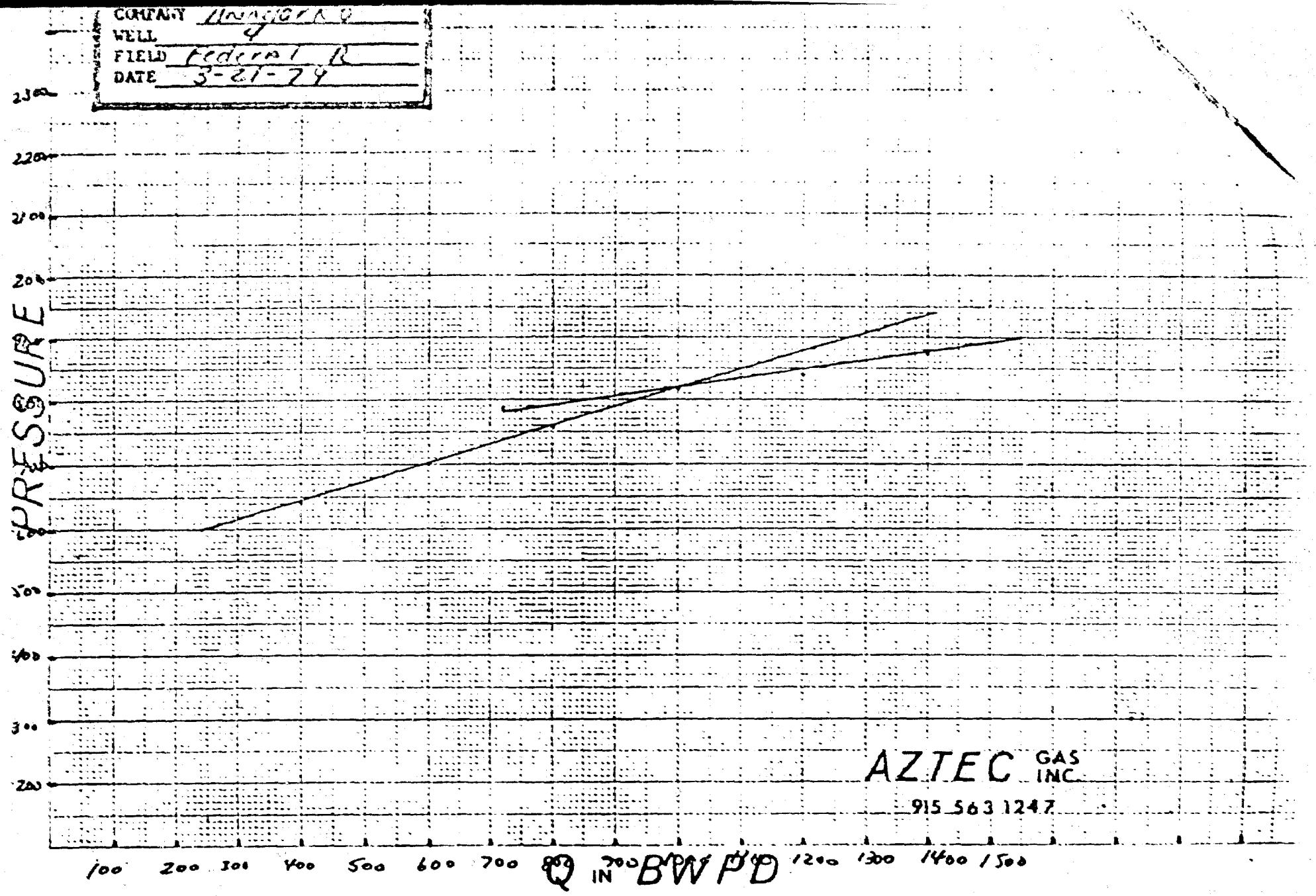
COMPANY Hanagan
WELL 4
FIELD Federal R
DATE 3-21-74
PRESSURE
Q IN MCFPD
AZTEC GAS INC
915 563 1247

OMPANY Pinnacle Prod. Co. DATE 3-19-[illegible]

COMPANY REPRESENTATIVE [illegible]

DRESS

ELL # B1-9 LEASE Federal B LOCATION Eddy County [illegible]

TIME		TEST DATA			
		TIME	RATE	PRESSURE	VOLUME
PART SHOP	5:00	9:00	62	730	[illegible]
RIVE LEASE	5:20	10:10	200	830	12710
ART TEST	9:10	11:10	310	920	12736
MPLETE TEST	6:45	12:10	410	1005	12753
PART LEASE	6:00	1:10	510	1085	12776
RIVE SHOP	8:15	2:10	615	1160	12805
VING TIME	5.5 hrs	3:10	720	1230	12833
TING TIME	9.25 hrs	4:10	820	1295	12867
MILEAGE	294 mi	5:10	920	1360	12902
		5:45	1120	1425	12922
		6:45	1250	1450	
				TOTAL	

AL FLUID INJECTED PRIOR TESTING

BILLING 8 hrs min chg. 400.00
5.5 hrs @ 10.00 55.00
294 mi @ 2.25 mi. 73.50
147 mi @ 10¢ mi 14.70

E OF LAST TEST

PERF

PACKER

OTTOM

SIZE

SIZE

TOTAL CHARGE THIS TEST $543.20

R WEIGHT #GAL. FRAC POINT 1395 PSI 960 BPD

PSI BPD

FOOT I.I. PST

RIPTION OF WORK 5:45 leveling off @ 1425 psi

R HT COMPANY REPRESENTATIVE [illegible]

STEP RATE TEST

COMPANY [illegible]
WELL [illegible]
FIELD [illegible]
DATE [illegible]

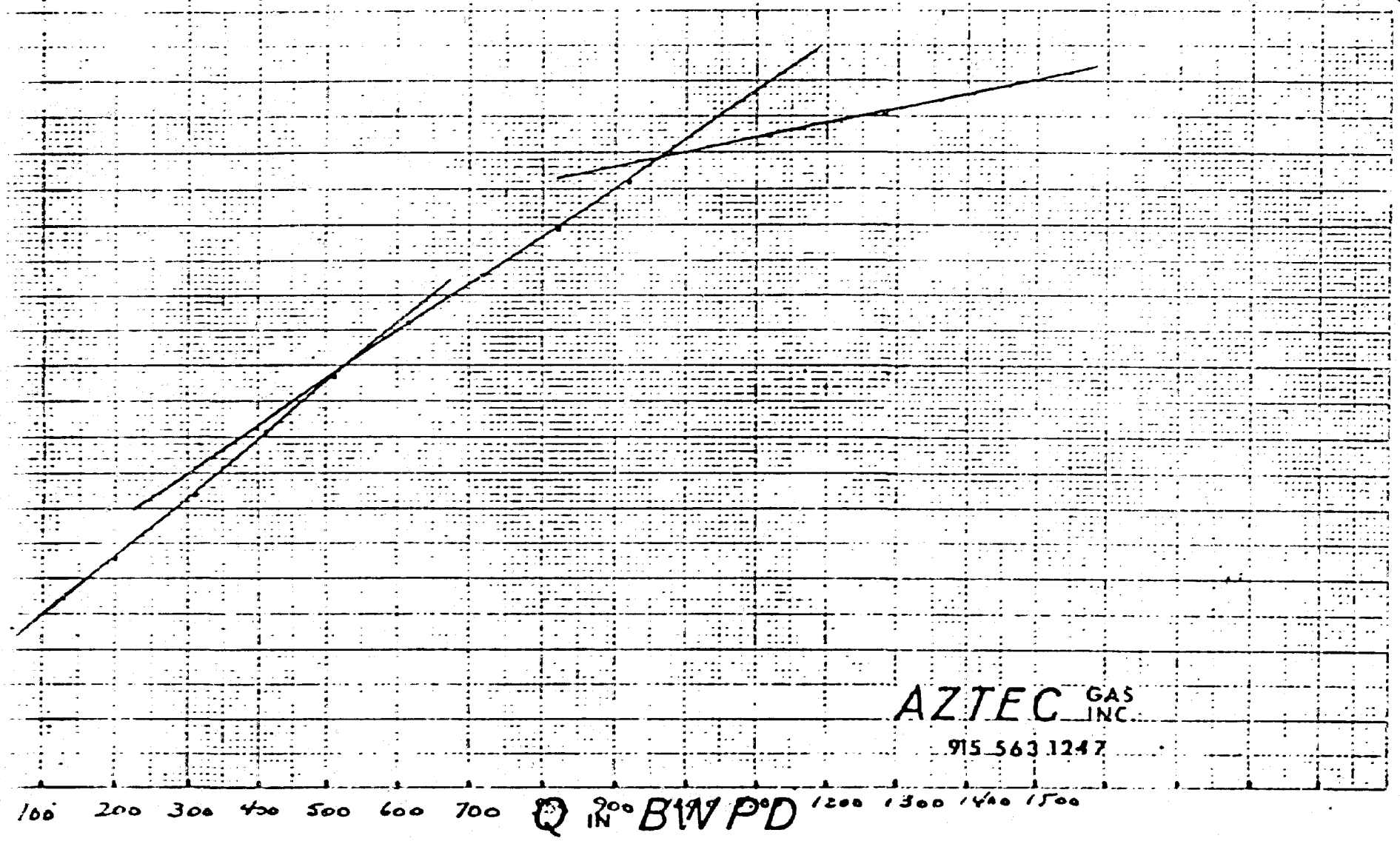

MPANY [illegible] DATE 3-26-79

DRESS _____ COMPANY REPRESENTATIVE _____

LL # 5-10 LEASE Federal A LOCATION Foldo N.M.

TIME

PART SHOP 6:30

RIVE LEASE 9:00

ART TEST 10:30

MPLETE TEST 5:35

PART LEASE 5:50

RIVE SHOP 8:15

IVING TIME 5 hrs

STING TIME 7 hrs

, MILEAGE 294

TEST DATA

TIME	RATE	PRESSURE	VOLUME
10:00	–	820	
10:05	200	835	13353
10:25	300	890	13360
10:05	400	920	13369
12:35	500	980	13370
1:05	600	1040	13392
1:35	700	1100	13407
2:05	800	1160	13424
2:35	900	1210	13441
3:05	1000	1270	13462
3:35	1090	1330	13486
4:05	1200	1385	13509
4:35	1300	1430	13535
5:05	1600	1530	13567
5:35	1700	1555	

TOTAL _____

TAL FLUID INJECTED PRIOR TESTING _____

BILLING 8 hr. min 400.00
5 hr @ 10.00 50.00
294 in. @ 25¢/mi 73.50

TE OF LAST TEST _____

D. _____ PERF _____

PACKER _____

BOTTOM _____

G. SIZE _____

B SIZE _____

TER WEIGHT _____ #GAL. _____

TOTAL CHARGE THIS TEST $523.50

FRAC POINT 1470 PSI 1350 BPD

PSI BPD

_____ FOOT I.I. _____ PST

SCRIPTION OF WORK _____

ESTER [illegible] COMPANY REPRESENTATIVE [illegible]

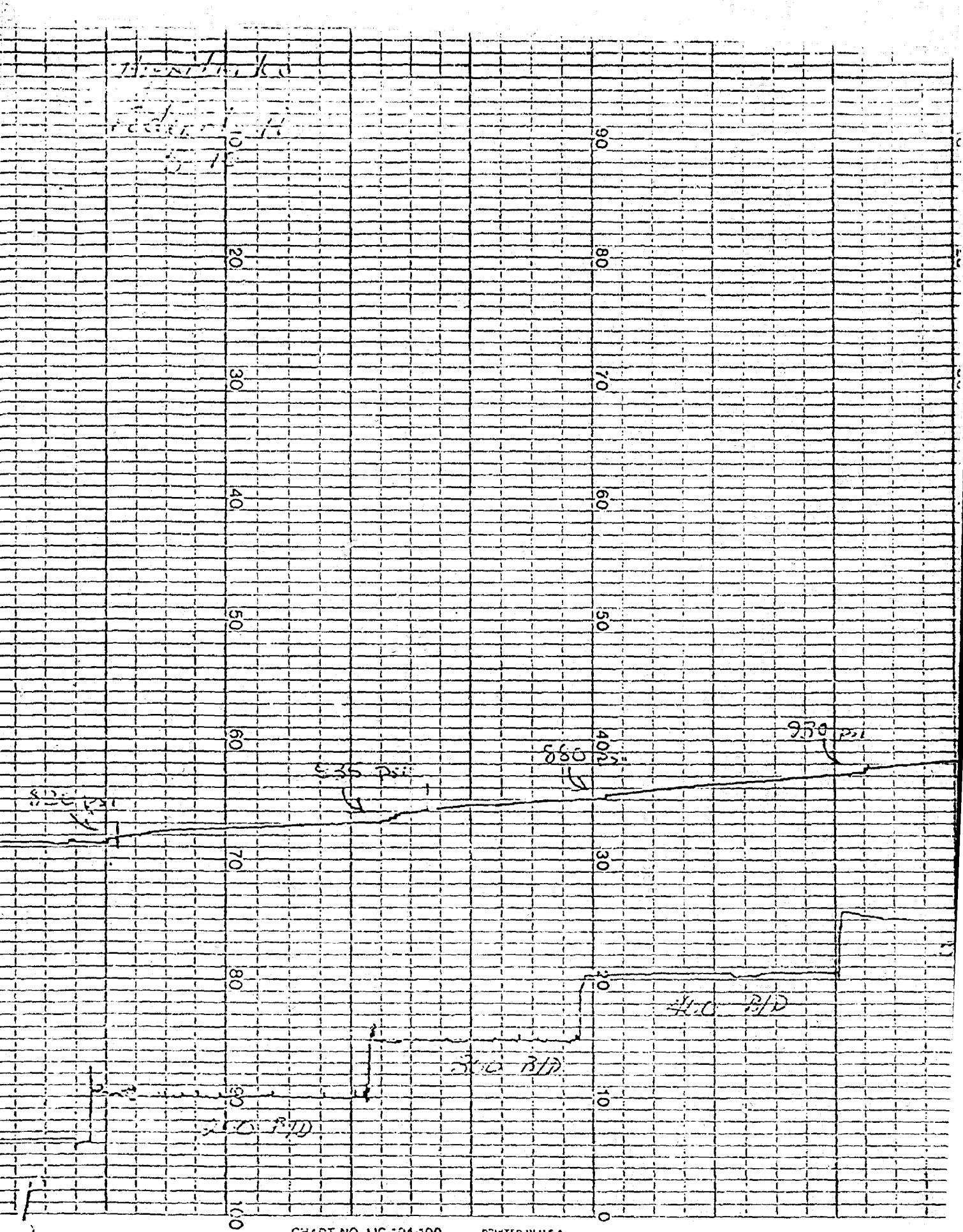

CHART NO. LIC-104-100 PRINTED IN U.S.A.

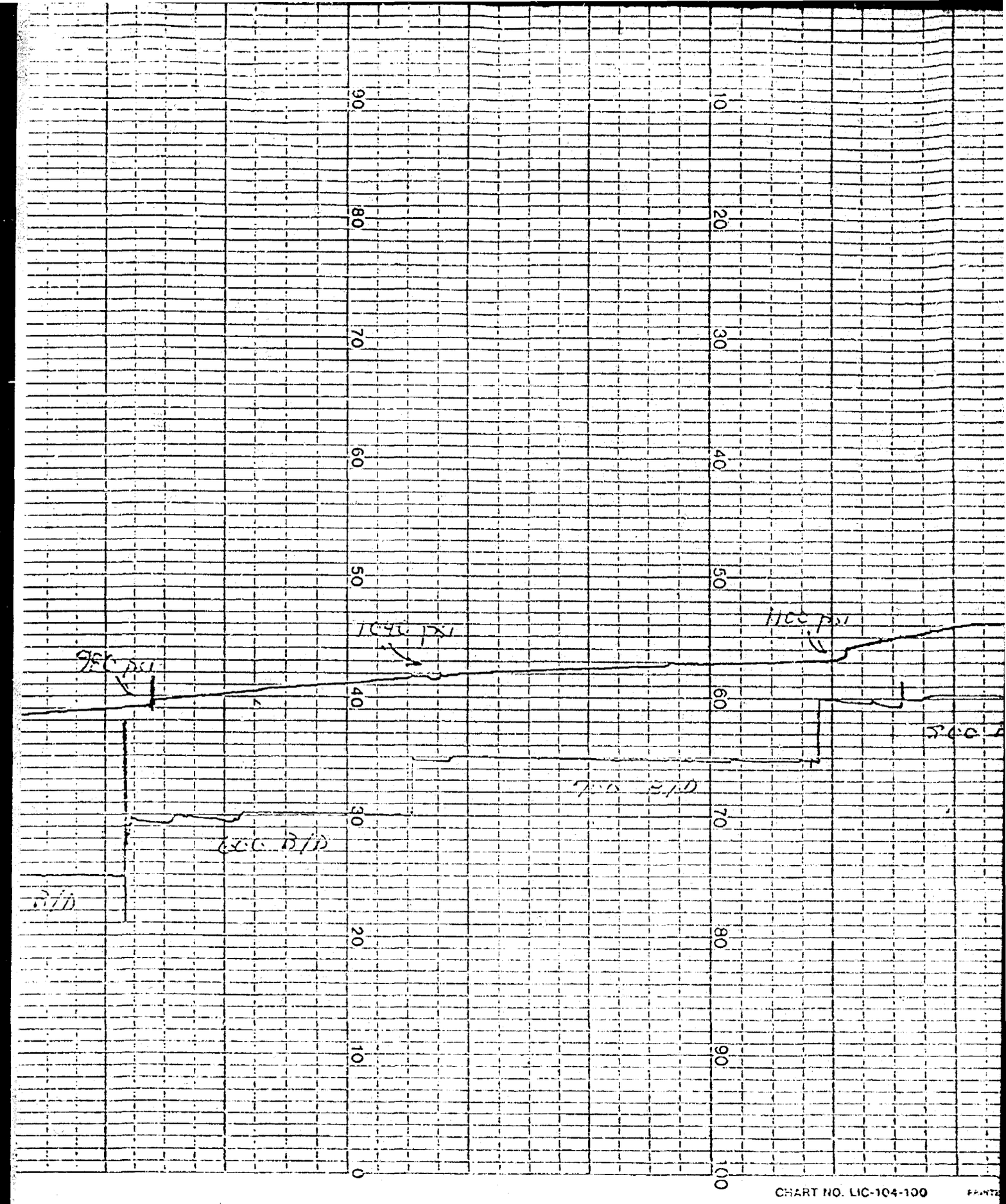
90
80
70
60
50
40
30
20
10
0
10
20
30
40
50
60
70
80
90
100
1040 psi
110 psi
95 psi
CHART NO. LIC-104-100

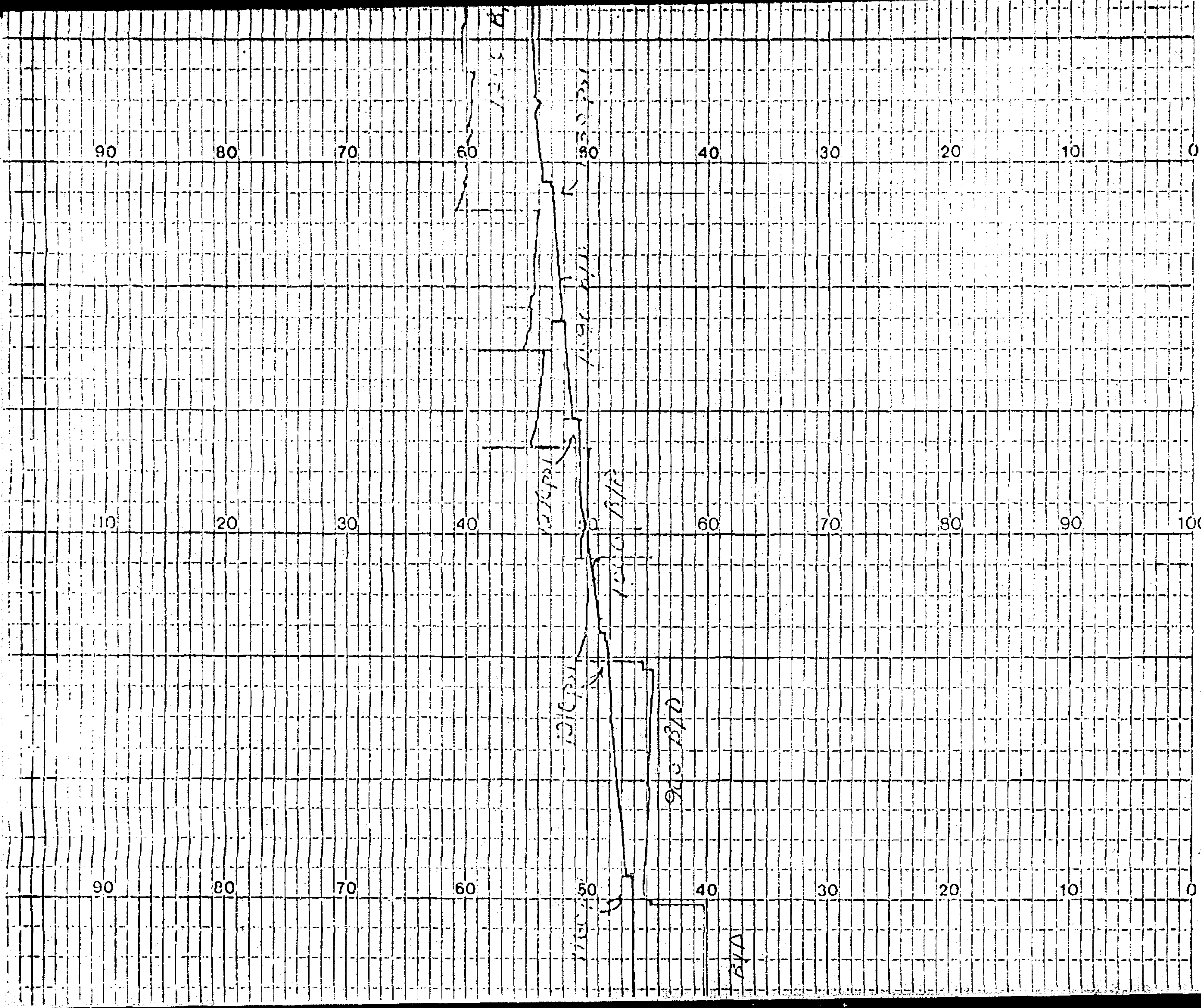
90
80
70
60
50
40
30
20
10
0
10
20
30
40
50
60
70
80
90
100
90
80
70
60
50
40
30
20
10
0

0
10
20
30
40
50
60
70
80
90
100
RECORD
100
90
80
70
60
50
40
30
20
10
0
0
10
20
30
40
50
60
70
80
90
100

STEP RATE TEST

COMPANY Hondarko
WELL 5-10
FIELD Federal-HV
DATE 3-26-79

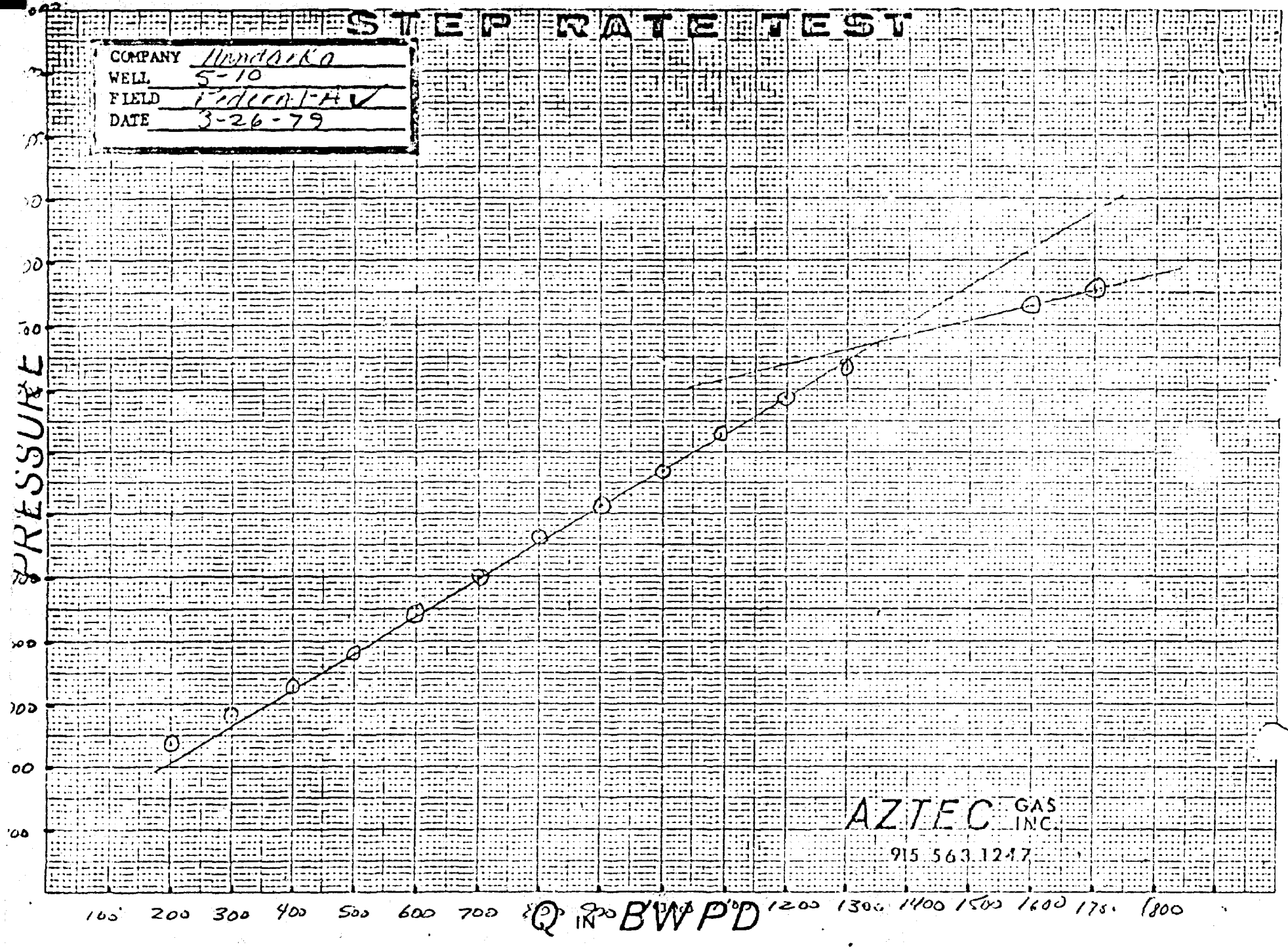

well file

369 Marshall Avenue / Saint Louis, Missouri 63119
(314) WO 1-3590/TWX 910-760-1660/Telex 44-2417

WATER ANALYSIS REPORT

COMPANY Anadarko Production Co. ADDRESS Loco Hills, N.M. DATE 15 April, 1976

SOURCE Supply Water-Burnham Flood 49 DATE SAMPLED 14 April, 1976 ANALYSIS NO.

Analysis		Mg/l		*Meq/l	
1. PH	8.0				
2. H_2S (Qualitative)	Negative				
3 Specific Gravity	1.000				
4. Dissolved Solids		870			
5. Suspended Solids					
6. Phenolphthalein Alkalinity ($CaCO_3$)					
7. Methyl Orange Alkalinity ($CaCO_3$)		160			
8. Bicarbonate (HCO_3)	HCO_3	195	61	3	HCO_3
9. Chlorides (Cl)	Cl	392	35.5	11	Cl
10. Sulfates (SO_4)	SO_4	0	48	0	SO_4
11. Calcium (Ca)	Ca	100	20	5	Ca
12. Magnesium (Mg)	Mg	12	12.2	1	Mg
13. Total Hardness ($CaCO_3$)		300			
14. Total Iron (Fe)		0.8			
15. Barium (Qualitative)		None detected			
16.					

*Milli equivalents per liter

PROBABLE MINERAL COMPOSITION

5	Ca	HCO_3	3
1	Mg	SO_4	0
8	Na	Cl	11

Saturation Values Distilled Water 20°C

$CaCO_3$	13 Mg/l
$CaSO_4 \cdot 2H_2O$	2,090 Mg/l
$MgCO_3$	103 Mg/l

Compound	Equiv. Wt.	X	Meq/l	=	Mg/l
$Ca(HCO_3)_2$	81.04		3		243
$CaSO_4$	68.07				
$CaCl_2$	55.50		2		111
$Mg(HCO_3)_2$	73.17				
$MgSO_4$	60.19				
$MgCl_2$	47.62		1		48
$NaHCO_3$	84.00				
Na_2SO_4	71.03				
NaCl	58.46		8		468

REMARKS

Respectfully submitted
TRETOLITE COMPANY

Larry Graham

Name, Number	Location: Unit, Sec., Twp., Range	Type	Date Spudded	Date Completed	Depth TD	Depth PBTD	Zone(s)	Record of Completion: Perf(s) and Well Construct	
"JJ" #2 ko Prod. Co.	1980' FSL, 660' FWL Unit L, Sec 3,T17S,R30E	Water Inject.	7-18-70	11-17-70	3107'	3105'	Metex Premier Lovington	Perfs: Csg:	2846-50,72-78,2940-46,3074- 8-5/8", 24#, @ 433' w/200 in a 12-¼" hole. 4½", 10.5#, @ 3105' w/250 in a 7-7/8" hole.
al "JJ" #3 ko Prod. Co.	660' FSL, 1980' FWL, Unit N, Sec 3,T17S,R30E	Water Inject.	12-9-72	2-7-73	3166'	3150'	Metex Premier	Perfs: Csg:	2820-26,56-68,76-82,92-96. 8-5/8", 24#, @ 459' w/250 in a 12¼" hole. 4½", 10.5#, @ 3163' w/450 in a 7-7/8" hole.
al "JJ" #4 rko Prod. Co.	660' FSL, 560' FWL, Unit M, Sec 3,T17S,R30E	Oil Producer	8-30-77	10-12-77	3140'	3107'	Metex Premier	Perfs: Csg:	2796-2806,30-38,52-60,64- 2930-38,44-52. 8-5/8" @ 509' w/300 sxs.. hole; 4-1/2" @ 3139' w/40 in 7-7/8" hole.
al "KK" #1 rko Prod. Co.	660' FSL, 660' FEL Unit P, Sec 3,T17S,R30E	Water Inject.	7-6-70	11-14-70	3200'	3185'	Metex Premier Lovington	Perfs: Csg:	2910-20,30-36,44-50,3010 3154-66. 8-5/8" @ 407' w/200 sxs. a 12-1/4" hole. 4-1/2" @ 3185' w/250 sxs. 7-7/8" hole.
ral "KK" #2 arko Prod. Co.	1980' FSL, 660' FEL Unit I, Sec 3,T17S, R30E	Oil Producer	9-8-43	NA	3050'	3049'	Metex Premier	Perfs: Csg:	2910-24,3012-20. 10" @ 565', 7" @ 2860' 15.5# liner from 2781'- 100 sxs cmt.
ral "KK" #4 arko Prod. Co.	660' FSL, 1980' FEL Unit O, Sec 3,T17S,R30E	Oil Producer	11-19-72	1-29-73	3375'	3154'	Metex Premier Lovington	Perfs: Csg:	2786-96,2842-48,80-90, 14-18,80-88,3126-36. 10-3/4" @ 543' w/250 sx 13-3/4" hole. 8-1/4" liner from 2227' w/75 sxs; 5-1/2" @ 315 sxs in 7-7/8" hole.

Number	Location: Unit, Sec., Twp., Range	Type	Date Spudded	Date Completed	Depth TD	Depth PBTD	Record of Completion: Zone(s)	Record of Completion: Perf(s) and Well Construction
Federal Anadarko Prod. Company	660' FSL, 660' FEL, Unit P, Section 9, T17S, R30E	Dual Water Injector, Gas Producer	12-13-71 P&A on 12-18-71 Re entered 6-25-72 Dual Completed 6-19-75	12-18-71	2862'	2554'	Gas produced from Seven Rivers Loco Hills Metex Premier	Perfs: 1744-48, 1902-14, 30-34, 48-4[illegible] 68-72 (SR). 2612 -38, 86-90, 2724-34, 60-6[illegible] 86-90, 2828-34. Csg: 8-5/8", 24#, set @ 462' w/250 hole dia.- 12-1/4. 5-1/2", 14#, set @ 2860' w/45[illegible] w/5-1/2" pkr @ 2548 for Dual; hole dia.- 7-7/8".
Federal [illegible]ko Prod. Co.	1980' FSL, 660'FEL Unit I, Section 9, T17S, R30E	Oil Producer	5-18-72	5-31-72	2878'	2875'	Loco Hills Metex Premier	Perfs: 2654-58, 2702-06, 41-49, 74-8[illegible] 2847-51, 56-60. Csg: 8-5/8" set @ 476' w/150 sxs, [illegible] size 12-1/4". 5-1/2" set @ 2878' w/450 sxs, hole size 7-7/8.
Federal [illegible]ko Prod. Co.	660' FSL, 1980' FEL Unit O, Section 9, T17S, R30E	Oil Producer	6-27-72	7-8-72	2869'	2866'	Loco Hills Metex Premier	Perfs: 2594-2600, 2606-10, 16-22, 6[illegible] 2710-20, 32-38, 46-52, 2816-[illegible] 30-34. Csg: 8-5/8", 24#, set @ 479' w/15[illegible] hole size 12-1/4". 5-1/2", 14#, set @ 2868' w/4[illegible] hole size 7-7/8".
Federal [illegible]rko Prod. Co.	1980' FSL, 1980' FEL, Unit K, Section 9 T17S, R30E	Oil Producer	7-10-72	7-28-72	2869'	2856'	Seven Rivers, Grayburg-Dolo. Loco Hills Metex Premier	Perfs: 1501-9, 23-25, 91-99, 1883-[illegible] 1900, 1916-47, 60-68, 2544-[illegible] 2602, 12-30, 74-82, 2720-[illegible] 30. Csg: 8-5/8", 24#, set @ 489' w/1[illegible] 5-1/2", 14#, set @ 2867' w/[illegible]
Federal [illegible]rko Prod. Co.	2310' FNL, 2310' FEL, Unit G, Section 10, T17S, R30E	Oil Producer	4-17-48 P&A on 6-29-48 Re-entered 6-3-72 Completed 6-18-72	6-29-48	3583' original 3578'	3301'	Loco Hills Metex Premier Lovington Jackson	Perfs: 2716-20, 32-48, 86-91, 2824-[illegible] 44-47, 56-62, 2930-38, 80-[illegible] 3050-56, 74-78, 84-88, 3200-[illegible] Csg: 8-5/8" from 404' to 496'. ([illegible] from P&A) w/50 sxs. 7", 20# @ 478' w/150 sxs i[illegible] hole. 4-1/2", 10.5#, @ 3305' w/[illegible] in 6-1/4" hole. Originall[illegible] tool drilled.

Number	Location: Unit, Sec., Twp., Range	Type	Date Spudded	Date Completed	Depth TD	Depth PBTD	Zone(s)	Record of Completion: Perf(s) and Well Construction
Federal Anadarko Prod. Company	330' FNL, 330' FEL, Unit A, Section 10, T17S, R30E	Oil Producer	11-24-55	1-16-56	3246'	3055'	Metex	Perfs: 2887-2899. Csg: 8-5/8" @ 527' w/25 sxs. 7" Liner from 2238'-2336' w/ 5-1/2" @ 3044' w/50 sxs. Cab Tool Drilled.
Federal arko Prod. Co.	1980' FNL, 1980' FWL, Unit F, Section 10, T17S, R30E	Water Inject.	5-24-72 Recompleted as Injector in 6/75	6-7-72	2960'	2960'	Loco Hills Metex Premier	Perfs: 2715-18, 32-46, 90-94, 2825- 46-50, 59-63, 84-88, 2927- Csg: 8-5/8", 24# @ 494' w/150 s size 12-1/4". 5-1/2", 14# @ 2959 w/450 sx size 7-7/8".
Federal arko Prod. Co.	2140' FNL, 620' FWL, Unit E, Section 10 T17S, R30E	Oil Producer	5-29-72	6-8-72	2942'	2937'	Metex Premier	Perfs: 2761-66, 2802-10, 21-26, 35- 2904-09, 14-18. Csg: 8-5/8", 24# @ 480' w/150 sx hole size 12-1/4". 5-1/2", 14# @ 2941' w/450 s hole size 7-7/8".
Federal arko Prod. Co.	660' FNL, 1980' FWL, Unit C, Section 10, T17S, R30E	Oil Producer	2-7-77	3-15-77	3195'	3188'	Metex Premier	Perfs: 2830-36, 2864-77, 86-91, 2 2908, 70-78, 84-88. Csg: 8-5/8", @ 521' w/200 sxs, size 12-1/4". 4-1/2" @ 3188' w/450 sxs, size 7-7/8".
Federal darko Prod. Co.	660' FNL, 1980' FEL, Unit B. Section 10, T17S, R30E	Water Injector	12-2-72	2-6-73	3150'	3141'	Loco Hills Metex Premier	Perfs: 2780-84, 88-92, 2836-42, 94-98, 2908-12, 2976-82. Csg: 8-5/8", 24# set @ 476' w/ cmt. hole size 12-1/4". 4-1/2", 10.5# @ 3150' w/ hole size 7-7/8".
Federal nadarko Prod. Co.	1980' FNL, 1980' FWL, Unit F, Section 3, T17S, R30E	Water Injector	2-1-43	3-20-43	2984'	-	Metex Premier	Perfs: 2860-70, 2059-74. Csg: 8-1/4", 28#, set @ 525' w/ 7", 22# pulled all but 2 5-1/2", 14#, @ 2740' w/100 4-1/2" liner from 2702'-30 w/150 sxs.
Federal nadarko Prod. Co.	1980' FSL, 1980' FWL, Unit K, Section 3, T17S, R30E	Oil Producer	Drilled in 1943		3006'	3000'	Metex Premier	Perfs: 2854-64, 2952-64. Csg: 7", 20#, @ 2784' w/100 sxs. 4-1/2" liner from 2736-300 sxs, squeezed.

Name, Number tor	Location: Unit, Sec., Twp., Range	Type	Date Spudded	Date Completed	Depth TD	Depth PBTD	Zone(s)	Record of Completion: Perf(s) and Well Construct	
Federal #5 rator: Anadarko Prod. Co.	1980' FSL, 1980' FEL, Unit J, Section 9, T17S, R30E	Oil Producer, Proposed WIW	6-19-72	7-3-72	2869'	2864'	Loco Hills Metex Premier	Perfs:	2610-14, 20-24, 32-38, 48-50, 63-68, 2791-95.
								Csg:	8-5/8", 24#, set @ 489' sxs cmt. Hole size - 12 5-1/2", 14#, set @ 286' sxs cmt. Hole size - 7 Rotary Drilled.
Federal #7 rator: Anadarko Prod. Co.	660' FSL, 1980' FWL, Unit N, Section 9, T17S, R30E	Oil Producer, Proposed WIW	7-3-72	7-16-72	2859'	2848'	Queen Loco Hills Metex Premier	Perfs:	2106-12, 2582-86, 2596-2608-2612, 2708-14, 28-48, 2812-2818, 24-30.
								Csg:	8-5/8", 24#, set @ 481' sxs cmt. Hole size - 12 5-1/2", 14#, set @ 2858 sxs cmt. Hole size - 7-1 Rotary drilled.
Federal #3 rator: Anadarko Prod. Co.	330' FNL, 330' FWL, Unit D, Section 10 T17S, R30E	Oil Producer, Proposed WIW	1-3-57 Recompleted 3-29-77	2-6-57	Original 2873' Deepened to 2985'	Original 2847' 2985'	Loco Hills Metex Premier	Perfs:	2782-90, 2814-24, 37-47 52, 2916-26, 32-36.
								Csg:	8-5/8" set @ 510' w/75 5-1/2" set @ 2873' w/10 cmt. 4-1/2", 10.5#, line 2859' to 2985' w/40 sxs Original Cable Tool Dri
Federal #8 rator: Anadarko Prod. Co.	1980' FNL, 660' FEL, Unit H, Section 10, T17S, R30E	Oil Producer, Proposed WIW	9-8-76	11-3-76	3200'	3163'	Middle Metex, Lower Metex, Premier, Lovington	Perfs:	2826-30, 68-74, 86-2900 89, 3093-3120.
								Csg:	8-5/8", 24# set @ 474' 4-1/2", 105# set @ 3200 sxs. Top hole dia - 12- of hole dia. 7-7/8". Ro
Federal #3 rator: Anadarko Prod. Co.	1980' FSL, 1980' FEL, Unit J, Section 3, T-17S, R30E	Oil Producer Proposed WIW	Drilled in 1943. Recompleted July 1970		3018'	3010'	Metex Premier	Perfs:	2880-90, 2974-90.
								Csg:	10-3/4" set @ 570' w/50 7" set @ 2827' w/100 s @2576'. 4-1/2" liner s recompletion from 2782 w/100 sxs.
Federal #5-10 rator: Anadarko	1980' FSL, 660' FWL, Unit L, Section 10, T17S, R30E	Water Injection	4-22-72	5-4-72	2893'	2890'	Loco Hills Metex Premier	Perfs:	2656-59, 68-71, 78-82, 64-68, 80-84, 95-98, 2
								Csg:	8-5/8", 24#, set @ 518 hole diameter - 12-1/4 5-1/2", 14#, set @ 289 hole diameter - 7-7/8".

Number	Location: Unit, Sec., Twp., Range	Type	Date Spudded	Date Completed	Depth TD	Depth PBTD	Record of Completion: Zone(s)	Perf(s) and Well Construction
-1 Prod. Co.	1980' FSL, 660' FWL Unit L, Sec 2,T17S,R30E	Water Inject	8-31-43	10-29-43	3260'	-	Loco Hills Metex Premier Lovington	Perfs: 2822-28,2901-12,26-30,42-45, 3004-14,3155-70. Csg: 8-5/8" @ 560' w/50 sxs. 7" @ 2415' w/100 sxs. 4" liner from 2680'-3260' w/4[illegible] sxs.
. Co.	660' FNL, 660' FEL, Unit A, Sec 3,T17S,R30E	Oil Producer	4-5-43	6-5-43	3030'	-	Metex Premier	Perfs: No Perfs, OH: 2840'-3030'. Csg: 8-1/4" @ 495' w/50 sxs. 7" @ 2352, pulled 5-1/2" @ 284[illegible] w/100 sxs.
. Co.	660' FNL, 1980' FEL Unit B, Sec 3,T17S,R30E	Oil Producer	4-14-43	6-7-43	3015	-	Loco Hills Metex Premier	Perfs: No Perfs: OH: 2822--3015'. Csg: 8-1/4" @ 500' w/50 sxs. 7" @ 2352', pulled 5-1/2" @ 2[illegible] w/100 sxs.
. Co.	1980' FNL, 1980' FEL Unit G, Sec 3,T17S,R30E	Oil Producer	7-30-43	9-15-43	3021'	-	Loco Hills Metex Premier	Perfs: No Perfs., OH: 2820'-3021'. Csg: 8-1/4" @ 504' w/50 sxs. 6-5/8" @ 2344' w/25 sxs. 5-1/2" @ 2820' w/100 sxs.
. Co.	1980' FNL, 660' FEL Unit H, Sec 3,T17S,R30E	Oil Producer	1-29-44	4-20-44	3024'	-	Metex Premier	Perfs: No Perfs., OH 2855' - 3024'. Csg: 8-5/8" @ 495' w/50 sxs. 5-3/16" @ 2855' w/100 sxs.
r. Co.	1874 FNL, 1874' FEL, Unit G, Sec 3, T17S,R30E	Oil Producer	12-17-66	2-8-67	3144'	-	Metex Premier	Perfs: 2864-70, 2900-12,2999-[illegible]. Csg: 8-5/8" @ 485' w/100 sxs. 5-1/2" @ 3143' w/250 sxs.
E" #14 il Co.	1980' FSL, 660' FEL Unit I, Sec 4 T17S,R30E	Oil Producer	2-5-46 recompleted	4-22-46 5-3-64	3121'	3096'	Loco Hills Metex Premier Lovington	Perfs: No Perfs., OH: 2790'-[illegible]. Csg: 10-3/4" @ 490' w/50 sxs. 8-5/8" @ 2270', muddem & pul[illegible] 7" @ 2790' w/100 sxs.
E" #15 mpson	660' FSL, 1980' FEL Unit O, Sec 4, T17S,R30E	Oil Producer	3-28-46	5-15-46	3076'	-	Loco Hills Metex Premier Lovington	Perfs: None, OH: 2750' -3076'. Csg: 10-3/4" @ 495' w/50 sxs. 7" @ 2237' w/10 sxs. 5-1/2" @ 2750' w/100 sxs.
E" #16 mpson	660' FSL, 660' FEL Unit P, Sec 4,T17S,R30E	Oil Producer	4-4-46	5-16-46	3125'	-	Loco Hills Metex Premier Lovington	Perfs: None, OH: 2750'-3125'. Csg: 8-5/8" @ 490' w/50 sxs; 5-1/[illegible] 2750' w/100 sxs.

e, Number	Location: Unit, Sec., Twp., Range	Type	Date Spudded	Date Completed	Depth TD	Depth PBTD	Zone(s)	Record of Completion: Perf(s) and Well Construct
"B" #3 tal.	330' FSL, 330' FEL Unit P, Sec 8,T17S,R30E	P&A	10-15-41	1-28-42	3267'	-	-	Perfs: None Csg: 8-1/4" @ 535' w/50 sxs., 7" @ 2547' mudded & pulled. See plugging detail sheet.
eral #1 earch	1980' FNL, 660 FEL, Unit H, Sec 9,T17S,R30E	Oil Producer	10-9-73	10-24-73	3505'	3495'	Lovington	Perfs: 3024-32'. Csg: 8-5/8" @ 463' w/100 sxs. 4-1/2" @ 3495' w/350 sxs.
eral #2 arch	660' FNL, 660' FEL, Unit A, Sec 9,T17S,R30E	Oil Producer	2-7-74	3-8-74	3100'	2945'	Metex Premier	Perfs: 2789'-2896'. Csg: 8-5/8" @ 473' w/100 sxs. 4-1/2" @ 2973' w/500 sxs.
eral #3 earch	1980' FNL, 1980' FEL Unit G, Sec 9,T17S,R30E	Oil Producer	6-18-74	7-5-74	3100'	3040'	Metex Premier Lovington	Perfs: 2729-41,76-86,2882-95,3018- Csg: 8-5/8" @ 473' w/100 sxs. 4-1/2" @ 3099' w/500 sxs.
eral #4 earch	1980' FNL, 1980' FWL Unit F, Sec 9,T17S,R30E	Oil Producer	7-2-74	7-18-74	3075'	3071'	Loco Hills Metex Premier Lovington	Perfs: 2656-72,2758-67,2863-78,29 Csg: 8-5/8" @ 495' w/100 sxs. 4-1/2" @ 3075' w/500sxs.
eral #6 earch	330' FNL & 1980' FEL Unit B, Sec 9,T17S,R30E	Oil Producer	1-4-75	1-24-75	3100'	3067'	Loco Hills Metex Premier Lovington	Perfs: 2717-25,2798-2810,32-38,29 3032-36,38-43. Csg: 8-5/8" @ 492' w/100 sxs. 4-1/2" @ 3099' w/500 sxs.
-Gulf #1 elch	330' FSL, 330' FWL Unit M, Sec 9,T17S,R30E	P&A	5-16-59 P&A on completion	7-13-59	3475'	-	-	Perfs: None. Csg: 8-5/8" @ 590' w/60 sxs; 7" pulled. See plugging detai
e #8-D Oil Co.	660' FNL, 1980' FEL Unit B, Sec 9,T17S,R30E	P&A	7-8-46 Plugged in 1946	9-11-46	3261'	-	-	Perfs: None. Csg: 10-3/4" @ 602' w/100 sxs; 2768' w/125 sxs; See plugg detail sheet.
"CB" Federal 3	660' FSL, 660' FWL, Unit M, Sec 9,T17S,R30E	P&A	8-30-72 Plugged in 1978	9-28-72	3600'	-	-	Perfs: None, squeezed: 2606-347 Csg: 8-5/8" @ 498' w/250 sxs; @ 3599' w/695 sxs; See detail sheet.
American Fed. #1 uman	330' FSL, 330' FEL Unit P, Sec 10,T17S,R30E	Oil Producer	9-5-63	11-18-63	3495'	2944'	Premier	Perfs: None: OH: 2920'-44'. Csg: 8-5/8" @ 492' w/50 sxs; 4- @ 2920' w/200 sxs.

Number	Location: Unit, Sec., Twp., Range	Type	Date Spudded	Date Completed	Depth TD	Depth PBTD	Zone(s)	Record of Completion: Perf(s) and Well Construction
3" #3 al.	330' FSL, 330' FEL Unit P, Sec 8,T17S,R30E	P&A	10-15-41	1-28-42	3267'	-	-	Perfs: None Csg: 8-1/4" @ 535' w/50 sxs., 7" @ 2547' mudded & pulled. See plugging detail sheet.
ral #1 arch	1980' FNL, 660 FEL, Unit H, Sec 9,T17S,R30E	Oil Producer	10-9-73	10-24-73	3505'	3495'	Lovington	Perfs: 3024-32'. Csg: 8-5/8" @ 463' w/100 sxs. 4-1/2" @ 3495' w/350 sxs.
ral #2 rch	660' FNL, 660' FEL, Unit A, Sec 9,T17S,R30E	Oil Producer	2-7-74	3-8-74	3100'	2945'	Metex Premier	Perfs: 2789'-2896'. Csg: 8-5/8" @ 473' w/100 sxs. 4-1/2" @ 2973' w/500 sxs.
ral #3 rch	1980' FNL, 1980' FEL Unit G, Sec 9,T17S,R30E	Oil Producer	6-18-74	7-5-74	3100'	3040'	Metex Premier Lovington	Perfs: 2729-41,76-86,2882-95,3018-? Csg: 8-5/8" @ 473' w/100 sxs. 4-1/2" @ 3099' w/500 sxs.
ral #4 rch	1980' FNL, 1980' FWL Unit F, Sec 9,T17S,R30E	Oil Producer	7-2-74	7-18-74	3075'	3071'	Loco Hills Metex Premier Lovington	Perfs: 2656-72,2758-67,2863-78,2965- Csg: 8-5/8" @ 495' w/100 sxs. 4-1/2" @ 3075' w/500sxs.
eral #6 arch	330' FNL & 1980' FEL Unit B, Sec 9,T17S,R30E	Oil Producer	1-4-75	1-24-75	3100'	3067'	Loco Hills Metex Premier Lovington	Perfs: 2717-25,2798-2810,32-38,2900-3032-36,38-43. Csg: 8-5/8" @ 492' w/100 sxs. 4-1/2" @ 3099' w/500 sxs.
Gulf #1 lch	330' FSL, 330' FWL Unit M, Sec 9,T17S,R30E	P&A	5-16-59	7-13-59 P&A on completion	3475'	-	-	Perfs: None. Csg: 8-5/8" @ 590' w/60 sxs; 7" pulled. See plugging detail
#8-D Oil Co.	660' FNL, 1980' FEL Unit B, Sec 9,T17S,R30E	P&A	7-8-46	9-11-46 Plugged in 1946	3261'	-	-	Perfs: None. Csg: 10-3/4" @ 602' w/100 sxs; 7" 2768' w/125 sxs; See plugging detail sheet.
CB" Federal	660' FSL, 660' FWL, Unit M, Sec 9,T17S,R30E	P&A	8-30-72	9-28-72 Plugged in 1978	3600'	-	-	Perfs: None, squeezed: 2606-3471. Csg: 8-5/8" @ 498' w/250 sxs; 5-1/2" @ 3599' w/695 sxs; See plugging detail sheet.
American Fed. #1 man	330' FSL, 330' FEL Unit P, Sec 10,T17S,R30E	Oil Producer	9-5-63	11-18-63	3495'	2944'	Premier	Perfs: None: OH: 2920'-44'. Csg: 8-5/8" @ 492' w/50 sxs; 4-1/2" @ 2920' w/200 sxs.

, Number	Location: Unit, Sec., Twp., Range	Type	Date Spudded	Date Completed	Depth TD	Depth PBTD	Record of Completion: Zone(s)	Record of Completion: Perf(s) and Well Constructi
" #1 Merican	660' FSL, 1980' FEL Unit O, Sec 10,T17S,R30E	Oil Producer	3-17-72	4-12-72	3404'	-	Loco Hills Metex Premier Lovington Jackson	Perfs: 2721-35,2816-42,2918-26,29[illegible] 3067-77,3282-3332. Csg: 8-5/8" @ 496' w/100 sxs; 4-1/2" @ 3404' w/450 sxs.
" #2 American	1980' FSL, 1980' FEL Unit J, Sec 10,T17S,R30E	Water Inject.	3-27-72	4-18-72	3414	-	Loco Hills Metex Premier Lovington Jackson	Perfs: 2718-44,2832-38,2930-34,30[illegible] 3218-3300. Csg: 8-5/8" @ 421' w/100 sxs. 4-1/2" @ 3414' w/450 sxs.
" #3 American	1980' FSL, 660' FEL Unit I, Sec 10,T17S,R30E	Oil Producer	5-11-72	6-10-72	3400'	3199'	Loco Hills Metex Premier Lovington	Perfs: 2737-40,54-60,2858-62,80-8[illegible] 57,3010-14,3104-12. Csg: 8-5/8" @ 428' w/100 sxs. 4-1/2" @ 3199' w/450 sxs.
"B" #8 Oil Co.	660' FNL, 660' FWL, Unit D, Sec 11,T17S,R30E	Water Inject.	6-11-46	9-20-46	3266'	3057'	Metex Premier	Perfs: None. OH: 2800'-3057' Csg: 8-5/8" @ 531' w/50 sxs. 5-1/2" @ 2800' w/100 sxs. 2-3/8" tbg @ 2759' w/tensio pkr, for injection.
"B" #9 Oil Co.	1980' FNL, 1980' FWL Unit F, Sec 11,T17S,R30#	Water Inject.	9-14-47	12-15-47	3082'	-	Metex Premier	Perfs: None. OH: 2850'3082'. Csg: 8-5/8" @ 528' w/50 sxs. 5-1/2" @ 2850' w/100 sxs. 2-3/8" tbg @ 2738' w/tensi for injection.
"B" #15 r Oil Co.	1980' FNL, 660' FWL Unit E, Sec 11,T17S,R30E	Oil Producer	9-13-77	10-14-77	3190'	3170'	Metex Premier Lovington	Perfs: 2919-31,2979-3024,3128-60'. Csg: 8-5/8" @ 431' w/275 sxs. 4-1/2" @ 3190' w/500 sxs.
BE" #1 il Co. Oper.	990' FNL, 2310' FEL Unit B, Sec 16,T17S,R30E	Oil Producer	10-9-58 Deepened in 1972	8-19-59	2103' deepened to 3950'	3866'	Queen Loco Hills Metex Premier Lovington Jackson	Perfs: 2094-2122,2556-87,2643-85, 3203-3360,3421-3838. Csg: 9-5/8" @ 523' w/150 sxs; 7" 2087' w/200 sxs. TOC 1200' 4-1/2" @ 3949' w/423 sxs. 400'.
State #1 merican	990' FNL, 2310' FWL, Unit C, Sec 16,T17S,R30E	Oil Producer	7-28-52	9-20-52	2097'	-	Queen	Perfs: None. OH: 1807-2097. Csg: 8-5/8" @ 494' w/50 sxs. 7" @ 1807' w/50 sxs.
State #2 merican	990' FNL, 990' FWL, Unit D, Sec 16,T17S,R30E	Oil Producer	2-9-53	4-2-53	2100'	-	Queen	Perfs: None. OH: 2088'-2100'. Csg: 8-5/8" @ 500' w/50 sxs. 7" @ 2088' w/50 sxs.

Number	Location: Unit, Sec., Twp., Range	Type	Date Spudded	Date Completed	Depth TD	Depth PBTD	Record of Completion: Zone(s)	Record of Completion: Perf(s) and Well Construction
tate #3 erican	660' FNL, 1980 FWL, Unit C, Sec 16,T17S,R30E	Oil Producer	6-04-72	7-11-72	3947'	3914'	Loco Hills Metex Premier Lovington Jackson Lower San Andres	Perfs: 2564-94,2648-92,2791-95,2925-3174-76,3200-26,3478-86,3530-3634-71,3721-34,3847-92. Csg: 8-5/8" @ 551' w/100 sxs. 4-1/2" @ 3947' w/600 sxs.
tate #4 erican	660' FNL, 660' FWL, Unit D, Sec 16,T17S,R30E	Oil Producer	6-24-72	7-20-72	3950'	3915'	Loco Hills Metex Premier Lovington Jackson Lower San Andres	Perfs: 2558-88,2639-92,2792-99,2804-2915-22,3101-10,3205-99,3306-3428-96,3504-44,3622-90,3715-3826-95. Csg: 8-5/8" @ 530' w/100 sxs. 5-1/2" @ 3950' w/600 sxs.
State #10 rod. Co.	1370' FNL, 1980' FWL Unit F, Sec 16,T17S,R30E	Water Inject.	5-26-64	6-29-64	2095'	-	Queen	Perfs: None. Csg: 7" @ 561' w/50 sxs. 2-7/8" @ 2078' w/100 sxs. 1" tbg w/pkr set @ 2053 for i
State #14 erican	1650 FNL, 2310' FEL, Unit G, Sec 16,T17S,R30E	Oil Producer	4-11-68	5-18-68	2106'	-	Queen	Perfs: None. OH: 2070-2106. Csg: 8-5/8" @ 566' w/75 sxs. 5-1/2" @ 2070' w/100 sxs.
State #7 erican	1980' FNL, 1980' FWL Unit F, Sec 16,T17S,R30E	Oil Producer	9-19-41	11-6-41	2109'	-	Queen	Perfs: None. OH: 1900-2109. Csg: 8-1/4" @ 465' w/25 sxs. 7" @ 1900' w/50 sxs.
State #9 merican	1370' FNL, 660' FWL Unit E, Sec 16,T17S,R30E	Water Inject.	4-7-64	6-8-64	2088'	-	Queen	Perfs: None. OH: 2055-2088. Csg: 7" @ 530' w/50 sxs; 2-7/8" w/100 sxs; 1" tbg w/pkr @ for injection.
State #12 merican	1980' FNL, 2310' FWL, Unit F, Sec 16,T17S,R30E	Water Inject.	2-17-68	3-4-68	2100'	-	Queen	Perfs: None. OH 2079-2100. Csg: 8-5/8" @ 563' w/75 sxs; w/100 sxs; top pkr @ 1933' w/2-3/8" tbg.
State #19 merican	1980' FNL, 1980' FWL Unit F, Sec 16,T17S,R30E	Oil Producer	8-22-63 Recompleted on 4-10-72	12-31-63	11,300'	3915'	Grayburg Jackson	Perfs: 2536-2906,3194-3394,3404-3530-66,3676-84,3730-3692. Csg: 16" @ 341' w/400 sxs; circ. 8-5/8" @ 4000 w/1200 sxs. 3-1/2 @ 11,300' w/1650 sxs. Spotted 25 sx from 10,600 then pulled 4650' of 3-1/2" spotted 35 sk plug from 4650' and 70 sx plug from

Number	Location: Unit, Sec., Twp., Range	Type	Date Spudded	Date Completed	Depth TD	Depth PBTD	Record of Completion: Zone(s)	Record of Completion: Perf(s) and Well Construction
ate #27 rican	1850' FNL, 1315' FWL Unit F, Sec 16,T17S,R30E	Oil Producer	5-14-77	6-3-77	2100'	1920'	Seven Rivers	Perfs: 1766-1761. Csg: 10-3/4" @ 463' w/200 sxs. 7" @ 2057' w/200 sxs; squeeze OH w/50 sxs cmt.
ed. #1 an	330' FSL, 330' FEL, Unit P, Sec 10,T17S,R30E	Oil Producer	9-5-63	11-4-63	3495'	2944'	Premier	Perfs: None. OH: 2920'-2944'. Csg: 8-5/8" @ 492' w/50 sxs. 4-1/2" @ 2920' w/200 sxs.

ORDERS
ANADARKO

STATE OF NEW MEXICO
ENERGY AND MINERALS DEPARTMENT
OIL CONSERVATION DIVISION

IN THE MATTER OF THE HEARING
CALLED BY THE OIL CONSERVATION
DIVISION FOR THE PURPOSE OF
CONSIDERING:

CASE NO. 7573
Order No. R-7001

APPLICATION OF ANADARKO PRODUCTION
COMPANY FOR A WATERFLOOD EXPANSION,
EDDY COUNTY, NEW MEXICO.

ORDER OF THE DIVISION

BY THE DIVISION:

This cause came on for hearing at 9 a.m. on May 26, 1982, at Santa Fe, New Mexico, before Examiner Daniel S. Nutter.

NOW, on this _____ day of June, 1982, the Division Director, having considered the record and the recommendations of the Examiner, and being fully advised in the premises,

FINDS:

That the applicant's request for dismissal should be granted.

IT IS THEREFORE ORDERED:

That Case No. 7573 is hereby dismissed.

DONE at Santa Fe, New Mexico, on the day and year hereinabove designated.

STATE OF NEW MEXICO
OIL CONSERVATION DIVISION

JOE D. RAMEY,
Director

S E A L

DOCKET MAILED

Date 4/30/82