Western Refining Southwest LLC
A subsidiary of Marathon Petroleum Corporation
I-40 Exit 39
Jamestown, NM 87347

December 17, 2021

Mr. Kevin Pierard, Chief
New Mexico Environment Department
Hazardous Waste Bureau
2905 Rodeo Park Drive East, Building 1
Santa Fe, NM 87505

RE: Response to Approval with Modifications
Annual Groundwater Monitoring Report Gallup Refinery - 2019
Western Refining Southwest Inc., Marathon Gallup Refinery
EPA ID #NMD000333211
HWB-WRG-20-013

Dear Mr. Pierard:

Attached please find the response to comments contained in the New Mexico Environment Department (NMED) Approval with Modifications letter dated September 28, 2021. A timeline of the report is as follows:

- Report, submitted September 15, 2020
- *Disapproval*, received November 23, 2020
- Response to Disapproval, submitted March 31, 2021
- *Approval with Modifications*, received May 4, 2021
- Response to Approval with Modifications, submitted July 31, 2021
- *Approval with Modifications*, received September 28, 2021

The response to comments is provided in Attachment A and the revised 2019 Annual Groundwater Report tables are provided in Attachment B. Replacement pages for the New American Petroleum Institute Separator (NAPIS) inspection letter are included in Attachment C. The red-line/strike-out text of the NAPIS inspection letter, the revised NAPIS inspection letter, and the revised 2019 Annual Groundwater Report tables are provided electronically on CD (Attachment D).

If you have any questions or comments regarding the information contained herein, please do not hesitate to contact Mr. John Moore at (505) 879-7643.

Western Refining Southwest LLC
A subsidiary of Marathon Petroleum Corporation
I-40 Exit 39
Jamestown, NM 87347

Certification

I certify under penalty of law that this document and all attachments were prepared under my direction of supervision according to a system designed to assure that qualified personnel properly gather and evaluate the information submitted. Based on my inquiry of the person or persons who manage the system, or those persons directly responsible for gathering the information, the information submitted is, to the best of my knowledge and belief, true, accurate, and complete. I am aware that there are significant penalties for submitting false information, including the possibility of fine and imprisonment for knowing violations.

Sincerely,
Western Refining Southwest LLC, Marathon Gallup Refinery

Ruth A Cade

Ruth Cade
Vice-President

Attachments

cc: D. Cobrain, NMED HWB
L. Tsinnajinnie, NMED HWB
M. Suzuki, NMED HWB
L. Barr, NMOCD
L. King, EPA Region 6
M. Bracey, Marathon Petroleum Corporation
K. Luka, Marathon Petroleum Corporation
J. Moore, Marathon Gallup Refinery
H. Jones, Trihydro Corporation

ATTACHMENT A

RESPONSE TO COMMENTS

New Mexico Environment Department (NMED) to Western Refining Southwest LLC (Western) Comment Letter "Approval with Modifications Annual Groundwater Monitoring Report, Gallup Refinery - 2019" (September 28, 2021)

NMED Comment 1:	Western Response 1:
The Permittee's Response to Comment 2a from NMED's May 4, 2021 Approval with Modifications states, "the primary containment for the NAPIS is a 3/16 thick stainless steel (SS 316) liner that was fabricated and installed within each existing concrete bay of the NAPIS." The primary containment well liners are also designated as the SS 316 liner in Attachment 3 (NAPIS Inspection Report). There appears to be a typographical error in reporting the designated liner because according to Drawings 42400-105 (General Arrangement API Separator and Oil Recovery Sump Plan View Liner Installation) and 42400-106 (General Arrangement API Separator and Oil Recovery Sump Elevation View Liner Installation) included in Attachment 2 (NAPIS/LDU Drawings), the primary containment walls appear to be identified as 304SS liners. Clarify which liner was installed in the primary containment wells or identify the location of the primary containment wells that are utilizing the SS 316 liner in the figures.	Issued for Construction (IFC) Drawings reference 3/16-inch thick, 304 stainless steel (304 SS) for the lining of the oil/water separator bays. Correspondence from Western Refining to NMED (*API Separator Leak Detection Units*, dated August 5, 2013, Attachment A) references 316 grade stainless steel was used for the liners. As-built drawings were not generated for the NAPIS upgrade. Therefore, since multiple material grades have been documented, references to the specific grade of stainless steel will be removed from the document.

New Mexico Environment Department (NMED) to Western Refining Southwest LLC (Western) Comment Letter "Approval with Modifications Annual Groundwater Monitoring Report, Gallup Refinery - 2019" (September 28, 2021)

NMED Comment 2:	Western Response 2:
The Permittee's Response to Comment 3 from NMED's May 4, 2021 Approval with Modifications states, "[g]auging did occur during the December 2019 sampling event; however, the data were stored on a computer that was inadvertently wiped without a backup to the MGR database [and the m]onitoring wells gauging data during the December 2019 sampling event were lost and are not included in this report." Appendix D (Field Inspection Logs) in the *2019 Annual Groundwater Monitoring Report* (2019 Report) provides a copy of handwritten notes with the gauging data collected during the December 2019 event. The Permittee must use the gauging data from the Appendix D to generate new tables reporting the December 2019 sampling event and must include the gauging data collected from the December 2019 sampling event in future reports.	In clarification, sampling for the fourth quarter 2019 was completed during October, November, and December. Gauging that took place during the fourth quarter event is provided in Appendix D of the original report (submitted November 15, 2020) and are included in the attached Tables 9-1 and 9-2 (Attachment B).
NMED Comment 3:	**Western Response 3:**
The Permittee's Response to Comment 4 from NMED's May 4, 2021 Approval with Modifications states, "[t]he revised tables are included as Attachment 4." Attachment 4 (Replacement Pages) did not include any of the analytical summary tables required by Comment 4. Although Attachment 3 included Tables 8.8 through 8.10.2, the pertinent tables (e.g., revised Table 8.5) were not included with the Response. Address Comment 4 and provide the revised analytical tables.	The presence of separate phase hydrocarbon has been incorporated into the analytical data tables. Revised Section 8 tables are included with this response (Attachment B).

New Mexico Environment Department (NMED) to Western Refining Southwest LLC (Western) Comment Letter "Approval with Modifications Annual Groundwater Monitoring Report, Gallup Refinery - 2019" (September 28, 2021)

NMED Comment 4:	Western Response 4:
The Permittee's Response to Comment 5 from NMED's May 4, 2021 Approval with Modifications states, "MGR plans to complete a site-wide background concentration study based on the approved work plan "Response to Disapproval Investigation Work Plan Background Concentrations" dated September 26, 2019." NMED issued an approval to the September 26, 2019 Work Plan on March 30, 2021 that states, "[i]f the Permittee elects to submit a revised work plan, submit the required document for NMED's review no later than **July 30, 2021**. If the Permittee elects implementation of the investigation based on this approved plan, a report summarizing the results of the investigation must be submitted no later than **December 31, 2022**." As of the date of this letter, the Permittee has not provided NMED with a notice to begin work for the approved work plan. State if the activities from the approved work plan have been implemented and include the start date. In addition, the Permittee is reminded that a report summarizing the results of the investigation must be submitted to later than December 31, 2022.	Western plans to use the approved work plan for the site-wide background concentration study. The field activities will be conducted in 2022 and the investigation report will be submitted no later than **December 31, 2022**.

New Mexico Environment Department (NMED) to Western Refining Southwest LLC (Western) Comment Letter "Approval with Modifications Annual Groundwater Monitoring Report, Gallup Refinery - 2019" (September 28, 2021)

NMED Comment 5:	Western Response 5:
The Permittee's Response to Comment 8 from NMED's May 4, 2021 Approval with Modifications states, "[p]esticides applied on-site were used in accordance with manufacturers recommendations and would not constitute a waste. MGR will not be investigating the source of bromomethane at the Refinery." The statement is irrelevant because the bromomethane concentrations in the sample collected from evaporation pond EP-2 exceeded applicable screening levels. The source of bromomethane may potentially be ethylene dibromide (EDB) detected at the Facility. As such, the Permittee must demonstrate that the detected bromomethane concentrations are not the result of Refinery operations. The Permittee must investigate the source of bromomethane or the Permittee must conduct pesticide analysis for samples collected from the evaporation pond EP-2 using EPA Method 8081 in the upcoming groundwater monitoring work plan for the next two consecutive sampling events. Failure to comply with NMED's direction will constitute noncompliance and may result in an enforcement action.	Western will conduct pesticide analysis for samples collected from evaporation pond EP-2 using EPA Method 8081 during 2022 for two consecutive sampling events.

New Mexico Environment Department (NMED) to Western Refining Southwest LLC (Western) Comment Letter "Approval with Modifications Annual Groundwater Monitoring Report, Gallup Refinery - 2019" (September 28, 2021)

NMED Comment 6:	**Western Response 6:**
The Permittee's Response to Comment 10 from NMED's May 4, 2021 Approval with Modifications states, "[f]ield parameters will be measured and recorded while bailing, with the understanding that the process of hand-bailing may prevent stabilization of field parameters." Downhole probes/sondes are available to measure dissolved oxygen concentrations and many other in-situ water quality parameters. In-situ measurement may be an effective alternative for water quality parameters when bailers are used to collected samples. Propose to use in-situ measurement tools for wells where bailers are used for sampling in the upcoming groundwater monitoring work plan, as appropriate.	In-situ measurement tools are not feasible when hand-bailing from groundwater monitoring wells at the Refinery. The monitoring wells that are hand-bailed have a maximum diameter of 5 inches. The hand bailer used is chosen based on the diameter of the monitoring well and does not allow for an in-situ probe to be placed in the monitoring well concurrently with the bailing.
NMED Comment 7:	**Western Response 7:**
The Permittee's Response to Comment 11 from NMED's May 4, 2021, Approval with Modifications states, "Table 2.1 has been included with this response letter in Attachment 4." Table 2.1 was not included in Attachment 4. Provide the required table with the response letter (see also Comment 3).	Table 2.1 has been included with this response (Attachment B).
NMED Comment 8:	**Western Response 8:**
The Permittee's Response to Comment 14 from NMED's May 4, 2021 Approval with Modifications states, "[t]his and future reports will present the mercury data in µg/L." Table 8.8.2 included in Attachment 3 still presents the mercury data in mg/L. Although the replacement pages are not necessary for the 2019 Report, the Permittee must ensure that all future reports must present the mercury data in µg/L. No response required.	This comment is acknowledged.

New Mexico Environment Department (NMED) to Western Refining Southwest LLC (Western) Comment Letter "Approval with Modifications Annual Groundwater Monitoring Report, Gallup Refinery - 2019" (September 28, 2021)

NMED Comment 9:	Western Response 9:
According to Drawing 42400-100 (API Separator and Oil Recovery Ump Plan View), the area where polyurethane coating was applied appear to be limited to the vicinity of the leak detection pipes. However, it is not clear if the coating was applied across the entire surface of the secondary containment walls or at localized to the vicinity of the leak detection pipes. State whether or not the coating was applied across the entire surface of the secondary containment walls or limited to the vicinity of the leak detection pipes in the response letter.	Per Drawing 42400-104, notes carrying the "issued for construction" designation specify the application of a 60-100 mil polyurethane concrete coating on the inside surfaces of the tank. This indicates that the coating was to be applied on all interior surfaces on the concrete bays, not just around the leak detection pipes. This drawing also specifies that the client would apply the coating. Additionally, a memo dated May 23, 2007 from Giant Refining to NMED (Attachment A) was located discussing the use of an elastomeric coating lining material that was to be applied to the inside of each bay. Correspondence from Western Refining to NMED dated August 5, 2013, included the following: "Prior to the installation of the 316 [sic] stainless steel liners, the internal concrete cracks and joints were filled with epoxy grout and the internal concrete walls were sealed with the impermeable flexible coating system, Pelseal (fluoroelastomer). After internal repairs were made and the coating system applied, the concrete bays now serve as secondary containment. Leak detection system units were installed at this time between the stainless steel liners and the coated internal concrete bays." The correspondence is included in Attachment A.

New Mexico Environment Department (NMED) to Western Refining Southwest LLC (Western) Comment Letter "Approval with Modifications Annual Groundwater Monitoring Report, Gallup Refinery - 2019" (September 28, 2021)

NMED Comment 10:	**Western Response 10:**
In the *Summary of the NAPIS Construction*, page 2, paragraph 1, the Permittee states, "[t]he NAPIS bays were retrofitted in 2007 with a 60 – 100 mil polyurethane coating applied to the concrete followed by installation of a 3/16-inch (") stainless steel grade 316 (SS 316) [sic?] liner. A 3/8" interstitial space separates the steel liner from the concrete wall. This interstitial space is monitored by the LDU for each respective bay." Provide a schematic depicting (a) stainless-steel liner (primary containment wall), (b) interstitial space, (c) concrete wall (secondary containment wall), (d) polyurethane coating, and (e) a leak detection unit (LDU) including horizontal and vertical sections of the pipe.	There is no single schematic that provides the requested information in one view. The drawings provided in Attachment 1 to the *NAPIS Inspection – Summary of Findings*, dated July 9, 2021, are the only drawings located that document the design of repairs to the NAPIS in 2007. Drawing 42400-109, Detail P, illustrates the interstitial gap along the base and sides of the internal Wier wall. Drawing 42400-110 (see Attachment C - Revised *NAPIS Inspection – Summary of Findings*, Attachment 1), Detail R and Section U-U', further depict the 3/8" interstitial space with wall cross-sections. Drawing 42400-109, Detail L, provides the details of the leak detection unit. Documentation of the coating applied to the concrete walls of the bays is provided in the response to Comment 9.
NMED Comment 11:	**Western Response 11:**
In the *Summary of NAPIS Construction*, page 2, paragraph 1, the Permittee states, "[t]he LDU's are called out on Siemens IFC drawings 42400-100 and 105 (plan views) and in detail on IFC drawing 42400-109 (Detail L) all of which are included in Attachment 1." There is a typographical error in referencing the correct attachment with drawings 42400-100, 105, and 109. The referenced drawings are included in Attachment 2 (NAPIS/LDU Drawings) rather than Attachment 1 (Response to Comments). Correct the typographical error in future correspondence.	Attachment 1 in the *Summary of NAPIS Construction* refers to the attachments for the summary report itself, not the larger RTC submittal.

New Mexico Environment Department (NMED) to Western Refining Southwest LLC (Western) Comment Letter "Approval with Modifications Annual Groundwater Monitoring Report, Gallup Refinery - 2019" (September 28, 2021)

NMED Comment 12:	**Western Response 12:**
In the *LDU Evaluation and Recharge Test*, page 2, paragraph 4, the Permittee states, "[w]ater levels within the LDU monitoring wells were recorded prior to evacuation of the water from the monitoring wells using a vacuum truck." Clarify whether the term "LDU monitoring wells" reference includes the neighboring groundwater monitoring wells (e.g., NAPIS wells) or just the East and West LDUs themselves. If the East and West LDU's are designated as monitoring wells, the designation would be misleading because they are not wells. Clarify the designation of the LDUs in the response letter and future correspondence, as appropriate.	The referenced text is referring to the Leak Detection Units standpipes. The term "LDU monitoring wells" will not be used in the future to refer to readings associated with the East and West LDUs.
NMED Comment 13:	**Western Response 13:**
In the *LDU Evaluation and Recharge Test*, page 2, paragraph 6, the Permittee states, "Table 2 presents the calculated recharge rate in gallons per minute and milliliters/min (mL/min), based on the water levels in LDUs presented in Table 1." No recharge to the LDUs should be observed regardless of the amount of hydraulic pressure exerted by the wastewater stored in the NAPIS Bays if the stainless-steel liner (primary containment wall) is intact. The presence of the fluids in the LDU indicates the primary containment wall was compromised regardless of the recharge rate. Therefore, the test confirms that the primary containment wall of the East and West Bays have been leaking. The Permittee must investigate whether the secondary containment wall of the NAPIS Bays is still intact. Submit a work plan to investigate whether the secondary containment wall of the NAPIS Bays is intact (e.g., tracer test) no later than **March 31, 2022**.	A work plan will be developed to investigate whether the secondary containment wall of the NAPIS bays is still intact. The work plan may incorporate a combination of technologies (e.g., installation of additional monitoring wells or points, tracer test(s), etc.). The work plan will be submitted no later than March 31, 2022.

New Mexico Environment Department (NMED) to Western Refining Southwest LLC (Western) Comment Letter "Approval with Modifications Annual Groundwater Monitoring Report, Gallup Refinery - 2019" (September 28, 2021)

NMED Comment 14:	Western Response 14:
In the *LDU Evaluation and Recharge Test*, page 2, paragraph 6, the Permittee states, "Figure 3 presents a combined view of the historical water levels in monitoring wells adjacent to the NAPIS, and also includes the graph of water levels shown in Figure 2." According to Table 2 (LDU Recharge Rate), the highest recharge rates in the West and East LDUs are recorded as 98.12 and 11.48 mL/min, respectively. The observed recharge rates are not significant enough to affect the depth to water (DTW) readings in the NAPIS wells. Furthermore, NMED is of the opinion that the comparison of the DTW readings in the LDUs and NAPIS wells is not an appropriate method to evaluate the condition of the NAPIS because the DTW reading in the LDUs corresponds to the discharge rate from the primary containment walls rather than the discharge rate from the secondary containment walls of the NAPIS. The discharge from the second containment walls does not directly influence the DTW reading in the NAPIS wells. No response required.	Comment will be addressed in the work plan as requested in Comment 13.

New Mexico Environment Department (NMED) to Western Refining Southwest LLC (Western) Comment Letter "Approval with Modifications Annual Groundwater Monitoring Report, Gallup Refinery - 2019" (September 28, 2021)

NMED Comment 15:	Western Response 15:
In the *Onsite Inspection of the NAPIS LDU*, page 3, paragraph 1 and 2, the Permittee discusses the onsite inspection of the East Bay. Based on the inspection there were signs of corrosion and holes observed on the walls. The West Bay was not inspected because wastewater was being stored at the time. According to Table 1, the maximum recharge rate observed from the West Bay was approximately ten times greater than that of the East Bay; therefore, the walls of the West Bay may potentially be more corroded than those of the East Bay. Although both the East and West Bays are leaking and must be repaired, the leak from the East Bay appears to be less severe. Explain why the West Bay, where leakage rate is greater, is still in use. The Permittee may be required to switch to using the East Bay, based on the explanation.	One reasonable explanation for the observed higher recharge rate into the West LDU from the West Bay is that the West Bay was operational (full) during the observation period. As a result, the higher water head in the West Bay would drive more fluid into the interstitial space of the West Bay, which is connected to the West LDU. In contrast, the East Bay, was empty, and any recharge was limited to drainage of the interstitial space. This assumes other variables being equal. Switching the operation of the NAPIS bays requires planning and coordination in advance of a two-week turnaround period. The sequence of bay usage will be considered as the NMED-requested work plan is developed.
NMED Comment 16:	**Western Response 16:**
In the *Onsite Inspection of the NAPIS LDU*, page 3, paragraph 2, the Permittee states, "[p]hotographs of this error are included in Attachment B." There is a typographical error in referencing the correct attachment that the photographs are located. The photographs are included in Attachment 2 (Photo Log – NAPIS Investigation). Correct the typographical error in future correspondence.	This comment is acknowledged. The typographical error will be corrected.

New Mexico Environment Department (NMED) to Western Refining Southwest LLC (Western) Comment Letter "Approval with Modifications Annual Groundwater Monitoring Report, Gallup Refinery - 2019" (September 28, 2021)

NMED Comment 17:	Western Response 17:
In the *Comparison of LUD and NAPIS Wells Historical Analytical Data*, page 3, paragraph 3, the Permittee states that, "[m]anganese and chromium [are] components of stainless steel. Chromium is present in the LDU [but is] largely absent in the surrounding NAPIS wells while manganese concentrations in the LDUs are much higher than those in NAPIS-2. This indicates that water samples collected from the LDUs contain higher concentrations of water which is exposed to the SS 316 liner and conversely that associated impacts to groundwater are not present." It must also be noted that the LDUs are constructed with stainless steel while the NAPIS wells are constructed with PVC. The elevated chromium and manganese concentrations in the samples collected from the LDUs may or may not indicate the corrosion of the primary containment wells; rather, they may be indicative of the degradation of the LDU casings themselves. Regardless, the difference in the metal concentrations in the samples collected from the LDUs and NAPIS wells does not completely demonstrate that the secondary containment walls and polyurethane coating are properly intact. The Permittee must provide the work plan as required by Comment 13 of this letter.	The work plan requested in Comment 13 will be provided.

New Mexico Environment Department (NMED) to Western Refining Southwest LLC (Western) Comment Letter "Approval with Modifications Annual Groundwater Monitoring Report, Gallup Refinery - 2019" (September 28, 2021)

NMED Comment 18:	Western Response 18:
In the *Evaluation Findings*, page 4, bullet 2, the Permittee states that "[a] leak within the LDU would result in a continued increase in the recharge level to equilibrium with the surround groundwater level. Therefore, the data suggests that there is no hydraulic communication the NAPIS East Bay and the surrounding groundwater." According to Figure 3 (NAPIS LDU Recovery Test Data Summary), the elevations for the bottom of the East and West LDUs are recorded as approximately 6,907 feet and 6,907.5 feet, respectively. The groundwater elevations for all NAPIS wells gauged in 2019 were recorded below 6,907 feet according to the 2019 Report. Based on this information, the groundwater levels for the NAPIS wells depicted in Figure 3 are not accurate. Figure 3 shows that the groundwater elevations for wells NAPIS-1, NAPIS-2, and NAPIS are more elevated than the termination depths of the East and West LDUs, which is misleading. Since the groundwater elevations are lower than the termination depths of LDUs, groundwater would be migrated from, rather than to entering the LDU casings. In addition, the LDUs are stainless-steel pipes without screens; therefore, it is unlikely that the fluids stored in the LDUs have the potential to leak into the surrounding environment. Although hydraulic communication between the LDUs and the surrounding groundwater is unlikely, it does not preclude the possibility that the fluids stored in the NAPIS Bays are leaking from the secondary containment walls and leaching into the groundwater. Submit the work plan required by Comment 13 to investigate whether the fluids stored in the NAPIS Bays are leaking and leaching into the groundwater.	The work plan requested in Comment 13 will be provided.

New Mexico Environment Department (NMED) to Western Refining Southwest LLC (Western) Comment Letter "Approval with Modifications Annual Groundwater Monitoring Report, Gallup Refinery - 2019" (September 28, 2021)

NMED Comment 19:	Western Response 19:
In the *Evaluation Findings*, page 4, bullet 4, the Permittee states, "[t]he West LDU recharge rate over the period June 2 to June 8, 2021 (148.7 hours) was 0.16 mL/min, or a total of 1.4 liters. The East LDU recharge rate over the same period was 0.03 mL/min, or a total of 0.27 liters. These rates and cumulative total were based on the level changes in the LDUs over that period. Therefore, there does appear to be leakage through the SS 304 liners on both NAPIS bays. As shown in Table 2, these leakage rates are extremely low." According to Table 2 (LDU Recharge Rate), the highest recharge rates in the West and East LDUs are recorded as 98.12 and 11.48 mL/min, respectively. The higher recharge rates may correspond to the higher fluid levels in the NAPIS Bays. Provide a discussion regarding the correlation between the fluid levels in the NAPIS Bays and recharge rates in the respective LDUs.	See response to Comment 15.

New Mexico Environment Department (NMED) to Western Refining Southwest LLC (Western) Comment Letter "Approval with Modifications Annual Groundwater Monitoring Report, Gallup Refinery - 2019" (September 28, 2021)

NMED Comment 20:	Western Response 20:
In the *Evaluation Findings*, page 4, bullet 5, the Permittee states, "[i]f the West LDU water level returns to the level of water within the West Bay NAPIS, the evidence for the absence of a leak from the West LDU and NAPIS West Bay into the groundwater is stronger." The statement is unclear. It can be deduced that if there is no leak from the primary containment walls of the NAPIS Bay, the fluids would not accumulate in the LDUs and would not be detected. However, if the water level in the LDU equilibrates with the water level in the respective NAPIS Bay, such conditions would indicate failure of the primary containment. Clarify the statement in the response letter.	MPC agrees that leakage through the primary liner may be the cause for the water levels observed in the LDUs as was stated in the referenced text. The available evidence, however, does not support leakage from the secondary containment system into the environment. As stated in the conclusions of the summary, "[T]here is evidence for a low rate of leakage through the SS 316 [sic] liner into the interstitial space of both the East and West Bay of the NAPIS". The available evidence to date will be summarized, clarified, and the uncertainties noted with reference to the future work plan for additional data gathering.

New Mexico Environment Department (NMED) to Western Refining Southwest LLC (Western) Comment Letter "Approval with Modifications Annual Groundwater Monitoring Report, Gallup Refinery - 2019" (September 28, 2021)

NMED Comment 21:	Western Response 21:
In the *Evaluation Findings*, page 4, bullet 6, the Permittee states, "[s]everal analytes including manganese and chromium are elevated in the LDU wells relative to the NAPIS monitoring wells. These analytes are components of stainless steel, of which the NAPIS liner was constructed. This also suggests that groundwater is not a source for the water detected in the LDUs. Alternatively, the absence of chromium in the NAPIS monitoring wells suggests that the LDU's are not leaking to area groundwater." The elevated chromium and manganese concentrations in the samples collected from the LDUs may or may not indicate the corrosion of the primary containment walls; rather, may be indicative of degradation of the LDU casings themselves (see Comment 17). Regardless, the difference in metal concentrations in the samples collected from the LDUs and NAPIS wells does not completely demonstrate that the secondary containment walls and polyurethane coating are intact and the NAPIS is not leaking. The Permittee must investigate whether or not the fluids stored in the NAPIS Bays are leaking from the secondary containment walls to the environment (see also Comment 13).	See the response to Comment 13.

New Mexico Environment Department (NMED) to Western Refining Southwest LLC (Western) Comment Letter "Approval with Modifications Annual Groundwater Monitoring Report, Gallup Refinery - 2019" (September 28, 2021)

NMED Comment 22:	Western Response 22:
In the *Conclusions*, page 4, bullet 1, the Permittee states, "[t]he current data suggest that there is no leakage from the NAPIS or LDUs into the groundwater. The chromium historical analytical data for the LDU and NAPIS monitoring wells underscores this conclusion." The current data suggests that the groundwater may not enter the casings of the LDUs; however, there has been no demonstration that indicates that the fluids stored in the NAPIS Bays will not have the potential to leak into the groundwater. The elevated chromium concentrations in the samples collected from the LDUs may potentially be originating from the corroded LDU casings themselves. In order to verify the cause of the elevated metal concentrations in the samples collected from the LDUs, propose to collect (a) the NAPIS influent samples (fluid samples prior to entering the NAPIS Bays) and (b) the fluid samples must be analyzed for total and dissolved metals for two consecutive monitoring events although the Permittee may need to continue collecting these samples in the future to help monitor the corrosion of the LDU casings.	This issue will be addressed within the NMED-requested work plan.

New Mexico Environment Department (NMED) to Western Refining Southwest LLC (Western) Comment Letter "Approval with Modifications Annual Groundwater Monitoring Report, Gallup Refinery - 2019" (September 28, 2021)

NMED Comment 23:	Western Response 23:
In the *Conclusions*, page 4, bullet 2, the Permittee states, "[t]he addition of polyurethane coating on the concrete walls prior to installation of the SS 316 liner prevents leakage into groundwater." Although the polyurethane coating may prevent wastewater from permeating through the concrete walls, some organic compounds with electronegative properties similar to polyurethane may not be retained by the coatings. Evaluate the compatibility of the contaminants of concern (COCs) detected at the Site with the polyurethane coating and discuss the potential for the COCs to permeate through the coating in the response letter.	See response to Comment 9.

Western Refining
GALLUP

ENTERED

RECEIVED

AUG 7 2013

NMED
Hazardous Waste Bureau

WNR LISTED NYSE

August 5, 2013

Via Email and Certified Mail 7010 1670 0001 3141 0286, Return Receipt Requested

Mr. John E. Kieling
Chief, Hazardous Waste Bureau
New Mexico Environment Department
2905 Rodeo Park Drive East, Building 2
Santa Fe, NM 87505-6303

Re: API Separator Leak Detection Units
Western Refining Company Southwest, Inc. ("Western")
Gallup Refinery
EPA ID #NMD000333211

Dear Mr. Kieling:

On July 8, 2013, you sent a letter to Western's Gallup Refinery on behalf of the Hazardous Waste Bureau ("Bureau") requesting certain information about the new API Separator ("NAPIS") and its designated leak detection units ("LDUs"). The purpose of this letter is to respond within the time limitation you stated.

As a threshold matter, we would like to provide some clarification to the description of the LDU's in the letter. In 2007, 316 stainless steel liner inserts were installed inside both concrete bays in the NAPIS. Prior to the installation of the 316 stainless steel liners, the internal concrete cracks and joints were filled with epoxy grout and the internal concrete walls were sealed with an impermeable flexible coating system, Pelseal (fluoroelastomer). After internal repairs were made and the coating system applied, the concrete bays now serve as secondary containment. Leak detection system units were installed at this time between the stainless steel liners and the coated internal concrete bays. There is a leak detection system unit on the West Bay (West LDU), East Bay (East LDU) and on the oil sump (Oil Sump LDU).

To respond to your inquiries for information, we have broken down our responses to the following specific requests:

(i) a proposed approach to determine the source of fluid in the LDUs;

(ii) a proposed approach to evaluate for releases to surrounding soils and groundwater;
(iii) a proposed remedy to eliminate any possible leakage;
(iv) a discussion of whether or not there is an inspection schedule for the NAPIS to check the liner;
(v) as-built drawings of the NAPIS showing the LDUs;
(vi) a description of the LDUs;
(vii) a description of the methods used to collect fluid samples;
(viii) identification of when water was first detected in the LDUs;
(ix) a discussion of whether fluid present in the LDUs has ever been removed; and
(x) a discussion of any measures to determine the source of the leaks.

We will address each request in the order set forth above.

(i) Western has taken the following steps to investigate the source of and reasons for fluid in the LDUs.

1. Western recommenced weekly inspections during which we take depth to water measurements and schedule LDUs to be pumped as necessary.
2. Western pumped out all LDUs and dropped directly inside the East Bay a timed release wax dye cone to determine if the fluorescent dye is picked up in the LDUs.
3. Fluorescent dye was also added to the process sewer sewer box upstream of the NAPIS as a secondary test.
4. The west bay of the NAPIS is currently shut down for mechanical repairs. During this time the west bay will be completely drained and the internal stainless steel liner will be inspected for leaks or signs of any maintenance requirements.

At this time, we have not completed our evaluation steps and have not yet drawn a conclusion about the source of and reasons for fluid in the LDUs. We plan to continue with additional dye testing and will be evaluating the results.

(ii) Western has engaged in the following activities relating to evaluation of whether there are releases from the NAPIS to the environment. Western installed six monitoring wells around the new API at the direction of NMED in 2007 and 2008, four of which continue to be monitored routinely in accordance with the Facility Wide Ground Water Monitoring Plan approved in August of 2010. The LDUs were added to the Ground Water Sampling event beginning in 2010 as part of the Facility Wide Ground Water Monitoring Plan. The four ground water monitoring wells located around the NAPIS unit monitor for the presence of contaminants in the ground water from possible leaks from the NAPIS unit.

Western is not proposing to conduct sampling of soils surrounding the NAPIS at this time. As discussed below, Western has noted minor staining of soils immediately adjacent to the new API; however, until the evaluation of potential on-going leaks is completed we do not believe that sampling of soils is beneficial.

Based on the analytical results, only NAPIS-2 monitoring well indicates detection levels greater than the applicable standards for BTEX and MTBE constituents. It is our conclusion based on well depth, depth to water, analytical results and quarterly monitoring that the fluids detected in the leak detection units are not a source of contamination for ground water. Comparisons of the monitoring wells NAPIS-1 (located up-gradient/east side), NAPIS-2 (down-gradient/west side) and the East and West LDUs which are located between these two monitoring wells indicate that the up-gradient well NAPIS-1 is free of hydrocarbons. Analytical results for the contaminants detected in NAPIS-2 do not indicate an increase in concentration levels that would be expected if the NAPIS was leaking into the ground water. BTEX concentration levels in the LDUs are at least 100 times more than the levels found in the down-gradient monitoring wells, namely NAPIS-2. Quarterly depth to water measurements in all four monitoring wells remained constant however the liquid levels in the "stand-pipe" of the LDUs fluctuated considerably. The water table in this area is approximately 9 -10 feet below the ground surface. NAPIS- 1 total depth is 13.53 feet and NAPIS-2 total depth is 13.61 feet, and the East LDU and West LDU are approximately 8 to 9 feet below ground surface.

(iii) Western is still in the process of evaluating the source of potential leaks to the LDUs as described in (i) above. At this time, there is no indication of releases from the NAPIS to groundwater. We have observed minor historical staining in small areas where there is some seepage from cracks in the concrete exterior. Western's focus at this time is to identify the source of leaks into the LDUs and then develop and implement a remedy for those leaks.

(iv) The LDUs are sampled and inspected on a quarterly basis for 8021B plus MTBE, 8015B and WQCC Metals. The stainless steel liners inside the bays of the NAPIS can only be visually inspected by taking the NAPIS unit out of service. The concrete wall exterior of the NAPIS is visually inspected on a daily basis during the operators' rounds.

(v) By April 25, 2013 email, Kristin Van Horn of the Bureau requested a figure showing the location of the NAPIS LDUs. Western, provided drawings of the NAPIS showing the LDUs by April 26, 2013 email. For your convenience, we have attached those drawings to this letter. We do not have an "as built" drawing for the NAPIS showing the LDUs.

(vi) The LDUs are identified as East LDU, West LDU, and Oil Sump LDU.

The East LDU is located on the southeast corner of the East Bay. Pipe material is 304 stainless steel and cap is 4 inch schedule 80 PVC slip on. The diameter of the pipe is 4 inch and total depth (from top to bottom) is 11.82 feet. Ground level elevation to the top of the pipe is 2.86 feet with 8.96 feet below ground surface.

The West LDU is located on the southwest corner of the West Bay. Pipe material is 304 stainless steel and cap is 4 inch schedule 80 PVC slip on. The diameter of pipe is 4 inch and total depth (from top to bottom) is 12.77 feet. Ground level elevation to the top of the pipe is 4.49 feet with 8.28 feet below ground surface.

The Oil Sump LDU is located on the northeast corner of the west bay. Pipe material is 304 stainless steel and cap is 4 inch schedule 80 PVC slip on. The diameter of pipe is 4 inch and total depth (from top to bottom) is 7.25 feet. Ground level elevation to the top of the pipe is 3.29 feet with 2.67 feet below ground surface.

The bottom of the NAPIS is approximately 8 feet (on the north side) to 11 feet (south side) below ground surface.

(vii) Each LDU is gauged for a depth to water (DTW) measurement to determine the water level inside the standpipe. If a water level is detected, a grab sample is collected using a new disposable polyethylene bailer. The bailer is lowered slowly inside the standpipe until a sufficient amount of liquid is retained inside the bailer for sample collection. Samples are collected in appropriate containers selected for the specific analysis requested. Samples are labeled and a custody seal applied to each container. LDUs not sampled due to an insufficient water level or found dry, are recorded in a field log specific to each unit. All samples collected are recorded in a field report or field log. Chain of Custody (COC) forms are completed at the end of each sampling day, prior to the transfer of samples off site, and accompany the samples during shipment to the laboratory. A custody seal is affixed to the lid of the shipping container. Copies of all COC forms generated are kept on site. All remaining purged water inside the bailer is placed inside a 5 gallon bucket and drained into the refinery waste water treatment system upstream of the API separator.

(viii) The West LDU has been in operation since 2004 and fluid has been detected since 2004 to present day. In 2007 when the stainless steel liners were installed inside the East Bay and West Bay, the original LDU on the West Bay was modified with a new standpipe and higher stick-up length. The East LDU and Oil Sump LDU were installed at that time as well. Inspection records indicate that fluid was first recorded in the Oil Sump LDU on June 26, 2009 and in the East LDU on December 9, 2008.

(ix) Since October 1, 2004, the West LDU has been inspected for fluids. If fluid is observed, a depth to water measurement is taken and recorded. A Work Request ticket is written for the maintenance department to use on-site vacuum truck to pump out fluid

John E. Kieling
Chief, Hazardous Waste Bureau
August 5, 2013

from the standpipe. West LDU was inspected on a bi-weekly basis from October 1, 2004 through December 16, 2004. From 2005 through 2007, inspections were done monthly which included pumping of the LDU if necessary. Inspections continued from 2009 through 2012 where fluid was first detected in the East LDU in 2008 and in the Oil Sump LDU in January of 2009 at which time fluids were removed from all LDUs. All three LDUs have been put back on a weekly inspection schedule and if fluids are detected at a sufficient level it is removed via a vacuum truck.

(x) Please see the responses to (i) and (ii) above.

Please note Western reserves all applicable rights and defenses relevant to this matter, including supplementation or modification of the preceding information as appropriate. If you have any questions, please contact me. In addition, we stand ready to meet with you and your staff should the Bureau have any concerns regarding the preceding response.

Sincerely,

Ed Riege
Environmental Manager

cc: T. Blaine, P.E., NMED HWB
D. Cobrain, NMED HWB
N. Dhawan, NMED HWB
A. Allen, WRG
A. Haines, WRG
C. Chavez, OCD
G. von Gonten, OCD

Released to Imaging: 11/23/2022 9:27:32 AM

Received by OCD: 12/16/2021 8:08:27 AM

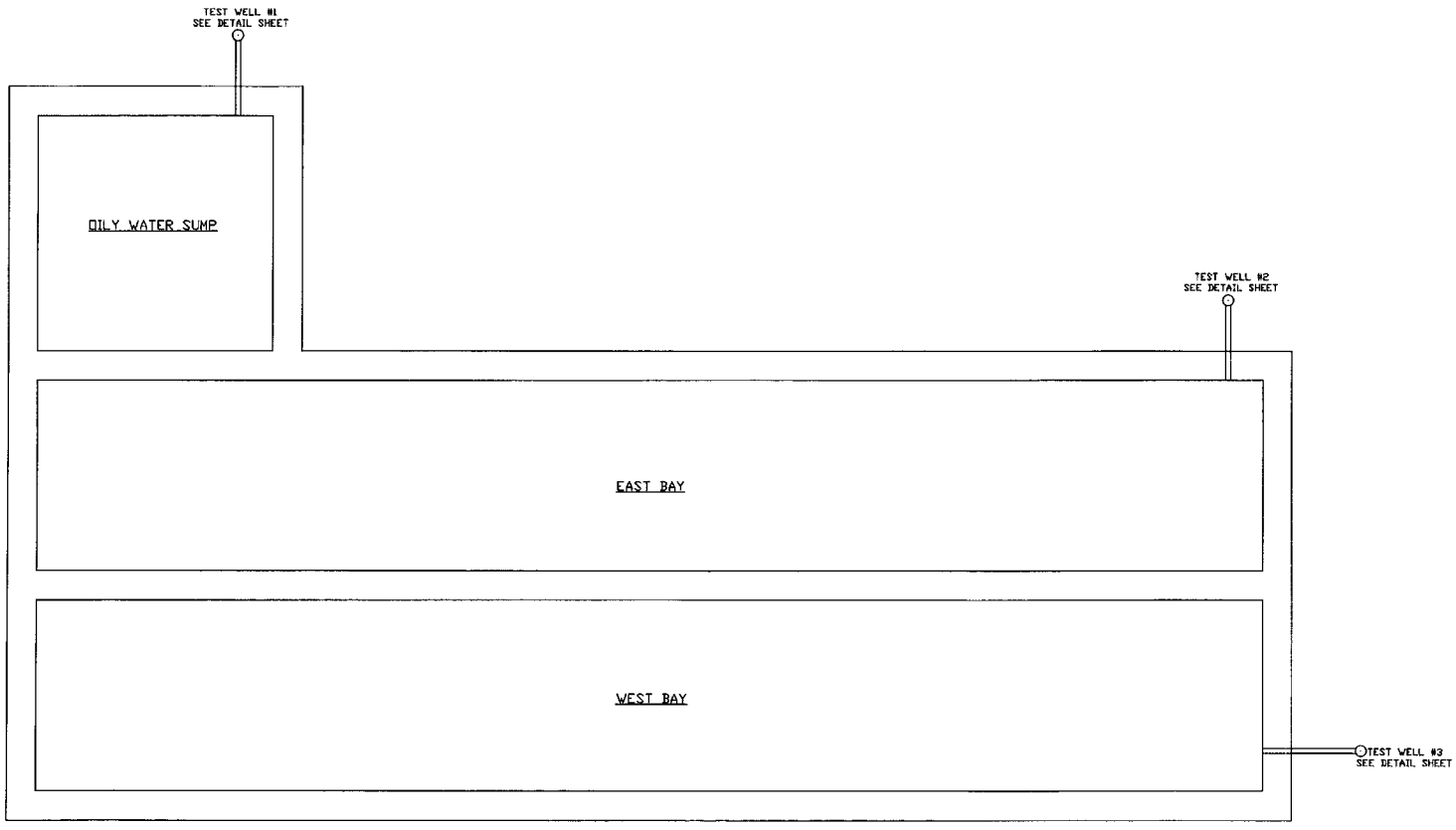

TEST WELL LOCATION PLAN

Western Refining
Gallup Refinery

API SEPERATOR & OW SYSTEM
API WATER PUMP-OUT
TEST WELLS

RFE No:		INSP/RT/UT:
DRN. BY: LJB	DATE: 4/26/13	WELD SPEC:
CHK'D. BY:	DATE:	PAINT:
APP'D. BY:	DATE:	CAD REF:
DRAWING NO. Z84-2/24/13	SHEET	REV 0

Received by OCD: 12/16/2021 8:08:27 AM

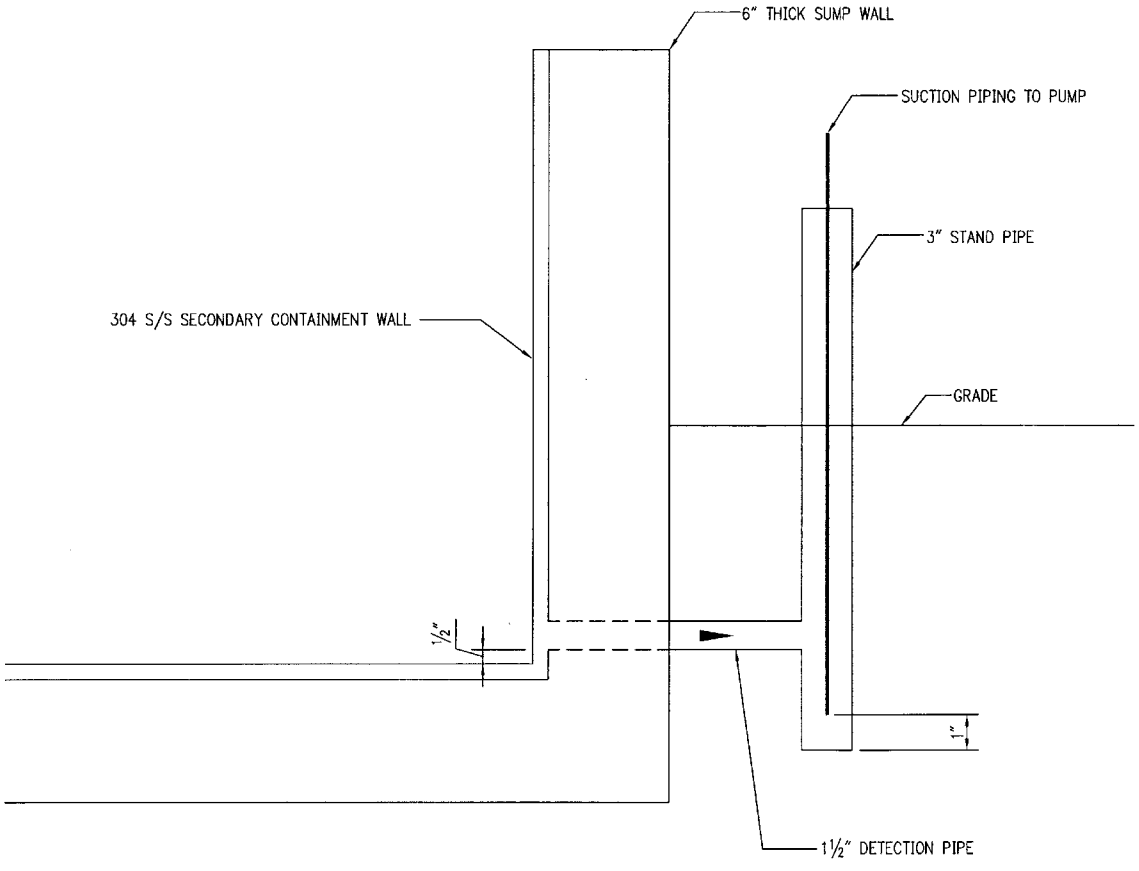

Western Refining
Gallup Refinery

API SEPERATOR & OW SYSTEM
API WATER PUMP-OUT
TEST WELL DETAIL

RFE No:		INSP/RT/UT:	
DRN. BY: LJB	DATE: 4/26/13	WELD SPEC:	
CHK'D. BY:	DATE:	PAINT:	
APP'D. BY:	DATE:	CAD REF:	
DRAWING NO.	TEST WELL	SHEET 1	REV 0

Released to Imaging: 11/23/2022 9:27:32 AM

Monzeglio, Hope, NMENV

From: Jim Lieb [jlieb@giant.com]
Sent: Wednesday, May 23, 2007 2:11 PM
To: Monzeglio, Hope, NMENV; Cobrain, Dave, NMENV; Chavez, Carl J, EMNRD
Cc: Ed Rios; Ed Riege; Steve Morris; Loren Pritzel; William Chojnacky; Don Riley
Subject: Update on the NAPIS Repairs at Giant, Ciniza Refinery
Attachments: 42400 Trans 2.txt; 42400-105.pdf; Giant 42400schR3.pdf

Hope and Carl:

Siemens Water Technologies has prepared diagrams for approval by Giant on the stainless steel inserts for the NAPIS. Giant will return comments on the diagrams to Siemens by May 25. We anticipate the work on the first bay (the West bay) will commence in June with work to drain and clean the West bay commencing by June 25. After cleaning, the West bay will be repaired using epoxy grout to fill cracks. Next, a flexible liner will be applied to the inside of the bay. Giant has tested several linings by suspending coupons in the weir box for 2 to 3 weeks and evaluated the coupons after the period of submersion. We have selected an elastomeric polyurethane coating lining material provided by a major coatings manufacturer. The elastomeric liner material has held up very well to exposure in the refinery's waste water. The elastomeric liner will be applied to a minimum thickness of 100 mils. After the lining has cured, Siemens will commence on-site fabrication and placement of the stainless steel liner in the West bay. Work on the West bay is expected to be completed by end of August. Work on the East bay is expected to be completed by late October.

I have attached a schedule provided by Siemens.

I have attached diagrams provided by Siemens that show the leak detection system in the sumps (lowest points of the NAPIS). We will use a dipstick to check for leakage in the two bays.

We will likely be using Kleinfelder to oversee installation of the three monitoring wells at the NAPIS. I will provide you with a copy of their proposal when they have finalized it for your approval prior to starting work. We are shooting for placement of the wells later this month or early in June.

I apologize for not getting this update to you earlier but a heavy schedule and recent developments seemed to make submittal at this time appropriate.

If you have questions or need more information please contact me. I will be out of the office Thursday attending a greenhouse gas emissions inventory meeting in Santa Fe.
Monday is a holiday.

Regards,

Jim Lieb
Environmental Engineer
Giant Industries, Inc.
Ciniza Refinery
I-40, Exit 39
Jamestown, NM 87347
(505) 722-0227
fax (505) 722-0210
jlieb@giant.com

This inbound email has been scanned by the MessageLabs Email Security System.

Released to Imaging: 11/23/2022 9:27:32 AM

Received by OCD: 12/16/2021 8:08:27 AM

NOTES:

1. VAPOR COVERS AND INTERNAL EQUIPMENT COMPONENTS REMOVED FROM VIEW FOR CLARITY.

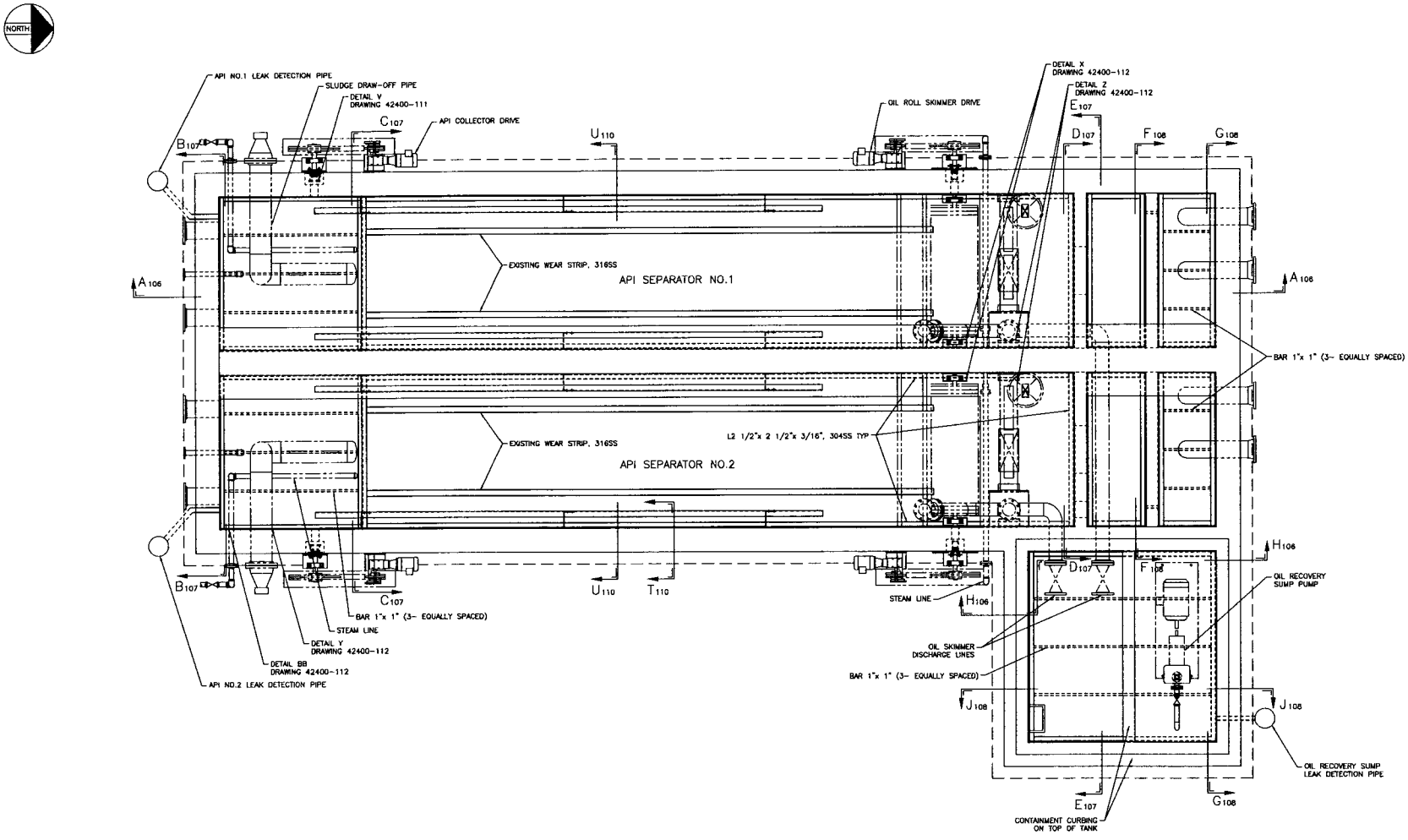

REV	DESCRIPTION	DATE	DWN	CHKD	APVD	ECN
A	ISSUED FOR APPROVAL AND INTERNAL REVIEW	05/22/07	DJS	JLF	JLF	

COMPANY CONFIDENTIAL

THIS DOCUMENT AND ALL INFORMATION CONTAINED HEREIN IS THE PROPERTY OF SIEMENS WATER TECHNOLOGIES. THE DOCUMENT, ALL OF THE INFORMATION CONTAINED HEREIN, AND PROPRIETARY TO SIEMENS AND ARE SUBMITTED IN CONFIDENCE. THEY ARE NOT TRANSFERABLE AND MUST BE USED ONLY FOR THE PURPOSE FOR WHICH THEY ARE SUBMITTED. THE DOCUMENT, OR ANY PART OF IT, MAY NOT BE COPIED, REPRODUCED, LOANED OR USED IN ANY OTHER MANNER WITHOUT THE EXPRESS WRITTEN CONSENT OF SIEMENS. IN NO EVENT SHALL THIS BY USE IS AN WAIVER OF RIGHTS TO THE INTERIOR OF SIEMENS. ALL PRODUCT, WORK DOCUMENTS, DATA, ALL REPORTS AND ANALYSES, MUST BE RETURNED TO SIEMENS ALL REPORTS AND ANALYSES, AND ALL RELATED NOTES AND DOCUMENTS, AS REQUESTED BY SIEMENS. ACCEPTANCE OF THE DELIVERY OF THIS DOCUMENT CONSTITUTES AGREEMENT TO THESE TERMS AND CONDITIONS.

DESIGNER	DJS	DATE 05/14/07
CHECKER	JLF	DATE 05/15/07
ENGINEER		DATE
MANAGER	JLF	DATE 05/15/07
FILE:		
SCALE: 1/2"=1'0"		

TITLE: GENERAL ARRANGEMENT
API SEPARATOR AND OIL RECOVERY SUMP
PLAN VIEW LINER INSTALLATION

CLIENT: GIANT INDUSTRIES, INC
CINIZA REFINERY, GALLUP, NM

SIEMENS Water Technologies
WAUKESHA, WI
262-547-0141

PROJECT	CODE	DRAWING	SHEET	REV
S00062		42400-105	1 OF 1	A

STD: 1-0200-24X36D1 | INTL REF: | BAR = 1" AT PLOT SCALE

Page 29 of 514

Received by OCD: 12/16/2021 8:08:27 AM

GIANT INDUSTRIES
API UPGRADE
GALLUP, NM
SIEMENS PROJECT S00062 (42400)

ID	Task Name	Duration	Start	Finish
1	CONTRACT AWARD	0 days	Fri 3/23/07	Fri 3/30/07
2	BASIC ENGINEERING PHASE	8 wks	Mon 4/9/07	Tue 6/5/07
3	PRELIMINARY LAYOUT SKETCHES, DRAWINGS, WELD PROCEDURES & SITE	2.5 wks	Mon 4/2/07	Thu 4/19/07
4	CLIENT PRELIMINARY SUBMITTAL APPROVAL	7 days	Mon 4/23/07	Tue 5/1/07
5	STRUCTURAL / THERMAL EXPANSIONS CALCS	3 wks	Mon 4/9/07	Mon 4/30/07
6	ADVANCE ORDER API INTERNAL EQUIPMENT	1 wk	Wed 5/2/07	Tue 5/8/07
7	GENERAL INSTALLATION DRAWINGS	3 wks	Mon 4/30/07	Mon 5/21/07
8	CLIENT BASIC ENG SUBMITTAL APPROVAL	0.75 wks	Mon 5/21/07	Fri 5/25/07
9	RELEASE FOR FABRICATION	1 wk	Mon 5/21/07	Tue 5/29/07
10	INTERNAL API EQUIPMENT FABRICATION	10 wks	Wed 5/9/07	Sat 7/7/07
11	CLIENT WEST API TANK PREP (COVER REMOVAL, DRAIN, CLEAN, ETC.)	4 days	Mon 6/25/07	Fri 6/29/07
12	CLIENT TANK PREP COMPLETE	0 wks	Fri 6/29/07	Fri 6/29/07
13	MOBILIZE INSTALLATION CREW (MECH.)	2 days	Sun 7/8/07	Tue 7/10/07
14	REMOVE INTERNAL EQUIPMENT WEST API	8 days	Tue 7/10/07	Wed 7/18/07
15	CLIENT TANK PREP & COATING (INCL. CURING)	8 days	Wed 7/18/07	Thu 7/26/07
16	MOBILIZE INSTALLATION CREW (LINER WELDERS)	2 days	Mon 7/30/07	Wed 8/1/07
17	INSTALL WEST API LINER & NOZZLES	8 days	Wed 8/1/07	Mon 8/13/07
18	MOBILIZE INSTALLATION CREW (MECH.)	2 days	Wed 8/15/07	Fri 8/17/07
19	INSTALL WEST API INTERNAL EQUIPMENT	10 days	Fri 8/17/07	Fri 8/31/07
20	CLIENT INSTALLS COVERS, TIE-INS & PUT WEST API IN SERVICE	3 days	Fri 8/31/07	Tue 9/4/07
21	WEST API COMPLETE	0 wks	Tue 9/4/07	Tue 9/4/07
22	CLIENT EAST API & OIL SUMP TANK PREP (COVER REMOVAL, DRAIN, CLEAN, NOZZLE CORE, ETC.)	1 wk	Tue 9/4/07	Sun 9/9/07
23	CLIENT TANK PREP COMPLETE	0 wks	Sun 9/9/07	Sun 9/9/07
24	MOBILIZE INSTALLATION CREW (MECH.)	2 days	Sun 9/9/07	Tue 9/11/07
25	REMOVE INTERNAL EQUIPMENT EAST API & OIL SUMP	8 days	Tue 9/11/07	Wed 9/19/07
26	CLIENT EAST API TANK & OIL SUMP PREPARATION & COATING (INCL. CURING)	8 days	Wed 9/19/07	Thu 9/27/07
27	MOBILIZE INSTALLATION CREW (LINER WELDERS)	2 days	Sun 9/30/07	Tue 10/2/07
28	INSTALL EAST API & OIL SUMP LINER & NOZZLES	8 days	Tue 10/2/07	Wed 10/10/07
29	MOBILIZE INSTALLATION CREW (MECH.)	2 days	Thu 10/11/07	Sat 10/13/07
30	INSTALL EAST API INTERNAL EQUIPMENT	10 days	Sat 10/13/07	Tue 10/23/07
31	CLIENT INSTALLS COVERS, TIE-INS & PUT EAST API & OIL SUMP IN SERVICE	3 days	Tue 10/23/07	Fri 10/26/07
32	EAST API & OIL SUMP COMPLETE	0 wks	Fri 10/26/07	Fri 10/26/07

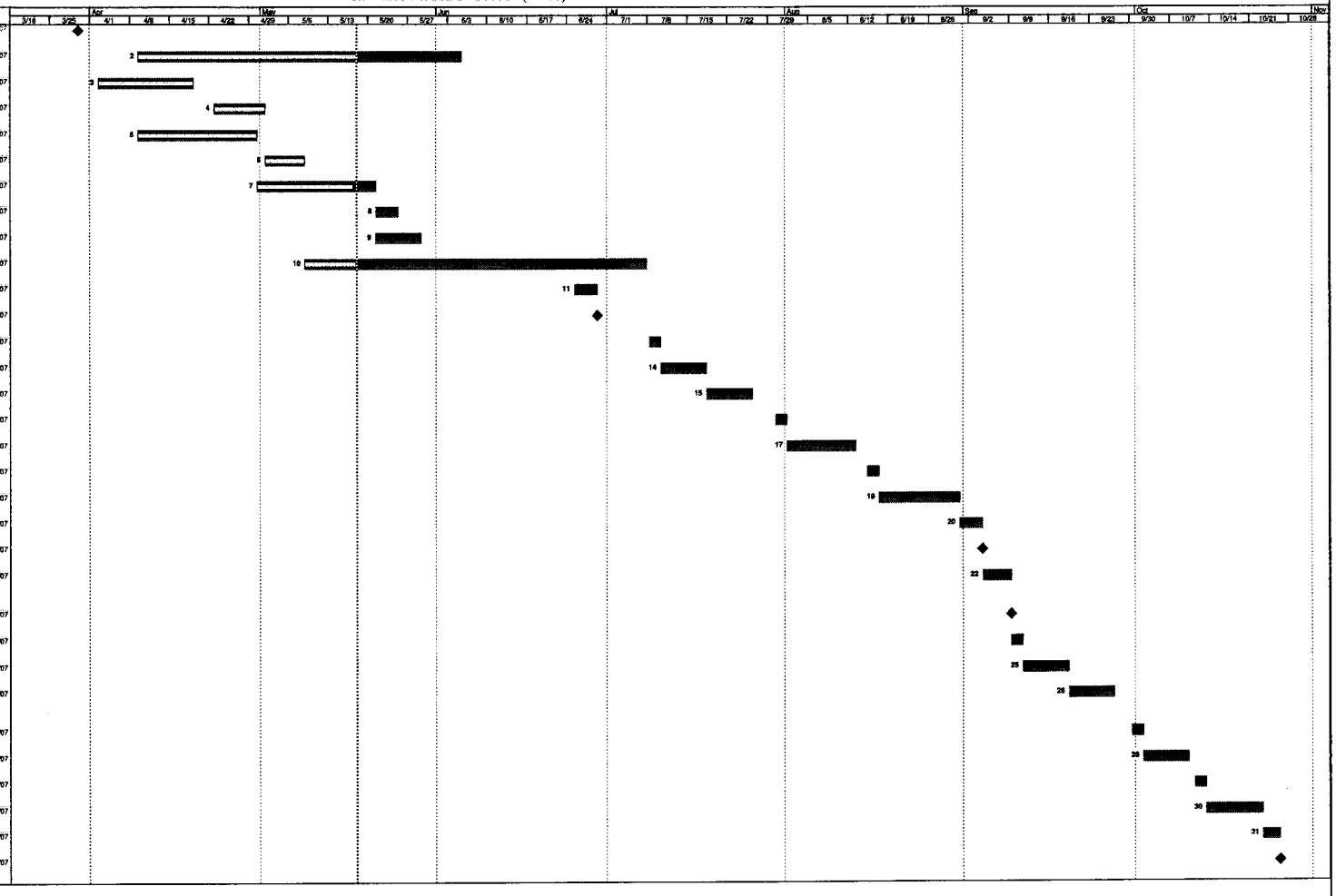

Project: GIANT INDUSTRIES
Date: REV. 3 5/17/07

Task | Split | Milestone | Summary | Rolled Up Task | Rolled Up Split | Rolled Up Progress | External Tasks | Project Summary | External Milestone | Deadline

Released to Imaging: 11/23/2022 9:27:32 AM

ATTACHMENT B

REVISED 2019 ANNUAL GROUNDWATER REPORT TABLES

TABLE 2.1

SUMMARY OF 2019 FINAL WATER QUALITY READINGS

MARATHON PETROLEUM COMPANY - GALLUP REFINERY - GALLUP, NEW MEXICO

SAMPLE ID	DATE	TIME	pH	TEMP ˚C	CONDUCTIVITY (Ms/cm), Spec. Cond	TDS (g/L), TDS (mg/L)	SALINITY (ppt)	DO (mg/L)	ORP (Mv)
MKTF-01	02/25/19	NO SAMPLES COLLECTED - SPH LAYER = 0.34 FEET							
MKTF-02	03/28/19	1224	8.34	11.19	5261	3.424	0.83	1.92	4.61
MKTF-03	03/25/19	NO SAMPLES COLLECTED - SPH LAYER = 1.1 FEET							
MKTF-04	03/26/19	NO DATA COLLECTED - SHEEN & ODOR							
MKTF-05	02/19/19	NO SAMPLES COLLECTED - SPH LAYER = 0.1 FEET							
MKTF-06	02/19/19	NO SAMPLES COLLECTED - SPH LAYER = 0.76 FEET							
MKTF-07	02/19/19	NO SAMPLES COLLECTED - SPH LAYER = 1.21 FEET							
MKTF-08	02/19/19	NO SAMPLES COLLECTED - SPH LAYER = 0.65 FEET							
MKTF-09	03/26/19	1109	7.9	12.1	2086	1.357	1.07	1.58	-59.9
MKTF-10	03/26/19	1007	7.85	11.9	2168	1.409	1.12	1.16	-24.4
MKTF-11	03/26/19	1057	7.72	12.03	3633	2.361	1.92	1.7	-65
MKTF-12	03/26/19	NO SAMPLES COLLECTED - SPH LAYER = 9.65 FEET							
MKTF-13	03/26/19	NO SAMPLES COLLECTED - WATER HAD OILY SHEEN & HIGH ODOR							
MKTF-14	03/25/19	NO SAMPLES COLLECTED - SPH LAYER = 0.36 FEET							
MKTF-15	03/25/19	NO SAMPLES COLLECTED - SPH LAYER = 0.02 FEET							
MKTF-16	02/20/19	1607	7.71	13.47	3400	2.21	1.79	2.1	-55.1
MKTF-17	03/26/19	712	7.72	10.99	1760	1.144	0.9	3.75	2.7
MKTF-18	03/26/19	1445	8.23	13.97	1775	1.154	0.91	1.63	-93.4
MKTF-19	03/25/19	736	7.34	8.91	2010	1.3	1.03	0.98	-5.8
MKTF-20	02/20/19	1538	8.6	7.82	70	0.046	0.03	9.59	-26
MKTF-21	02/20/19	NO DATA COLLECTED - SHEEN & ODOR							
MKTF-22	03/26/19	826	7.48	11.27	1907	1.239	0.98	1.89	-33.2
MKTF-23	03/26/19	NO DATA COLLECTED - SHEEN & ODOR							
MKTF-24	02/25/19	DATA WAS NOT RECORDED							
MKTF-25	02/14/19	DATA WAS NOT RECORDED							
MKTF-26	02/14/19	NO SAMPLES COLLECTED - SPH LAYER = 0.77 FEET							
MKTF-27	03/28/19	1247	837	10.18	12425	8.076	7.14	5.08	88.3
MKTF-28	03/28/19	851	8.42	13.82	2694	1.751	1.4	4.74	92.2
MKTF-29	03/25/19	953	8.58	10.72	2546	1.655	1.32	1.9	71
MKTF-30	03/28/19	923	8.37	11.57	3367	2.188	1.78	2.96	100.9
MKTF-31	02/20/19	1416	7.91	7.13	3303	2.147	1.73	3.64	59
MKTF-32	02/13/19	1530	8.51	10.5	27.3	1.78	1.43	3.1	56.1
MKTF-33	03/26/19	806	7.61	11.58	1672	1.087	0.85	1.3	2.7
MKTF-34	03/26/19	915	8	12.84	33700	3700	2.405	1.96	70.3
MKTF-35	03/26/19	1315	7.96	13.68	1784	1.159	0.91	1.33	-80.4
MKTF-36	03/25/19	UNABLE TO LOCATE WELL - NO SAMPLES							
MKTF-37	03/26/19	NO DATA COLLECTED - SHEEN & ODOR							
MKTF-38	03/26/19	1153	8.07	13.8	2087	1.357	1.07	1.65	90.2
MKTF-39	03/28/19	UNABLE TO SAMPLE WELL - NO ACCESS - BARRICADED AREA							
MKTF-40	02/20/19	1525	7.6	10.16	11341	7.372	6.47	3.83	63.3
MKTF-41	02/13/19	1556	8.71	11.64	3202	2.081	1.68	2.09	38.8
MKTF-42	02/13/19	1507	8.86	12.08	3729	2.424	1.98	5.5	43.3
MKTF-43	02/13/19	1438	7.75	8.75	14750	9.587	8.57	3.86	55.3
MKTF-44	02/13/19	1408	8.05	11.93	5493	3.57	2.98	4.52	51.8
MKTF-45	03/26/19	NO SAMPLES COLLECTED - SPH LAYER = 0.5 FEET							
OW-01	03/27/19	1244	9.29	13.71	1443	0.938	0.73	0.82	85.3
OW-10	03/27/19	1446	8.43	13.83	2651	1.723	1.38	1.88	107.1
OW-13	02/05/19	1335	8.37	11.34	1277	0.83	0.64	1.01	24.3
OW-14	02/05/19	1144	7.4	13.26	1898	1.234	0.97	2.56	67.7
OW-29	02/05/19	1448	7.58	11.89	1988	1.292	1.02	1.52	1.52

TABLE 2.1

SUMMARY OF 2019 FINAL WATER QUALITY READINGS

MARATHON PETROLEUM COMPANY - GALLUP REFINERY - GALLUP, NEW MEXICO

SAMPLE ID	DATE	TIME	pH	TEMP ˚C	CONDUCTIVITY (Ms/cm), Spec. Cond	TDS (g/L), TDS (mg/L)	SALINITY (ppt)	DO (mg/L)	ORP (Mv)
OW-30	03/27/19	1550	7.99	13.65	1979	1.286	1.02	0.74	75
OW-50	03/27/19	826	8.81	11.86	1208	0.785	0.61	0.79	84
OW-52	03/27/19	907	8.95	11.7	1045	0.679	0.52	0.91	54.1
OW-53	02/06/19	DRY - NO SAMPLES COLLECTED							
OW-54	02/06/19	1344	7.69	7.51	2156	1.401	1.11	2.97	12.5
OW-55	02/06/19	1430	1427	7.44	8.42	2225	1.446	1.3	-69.9
OW-56	02/06/19	1450	7.9	9	2847	1.848	1.48	3.59	30
OW-57	02/20/19	932	7.55	7.31	1842	1.198	0.94	1.4	-45.3
OW-58	03/28/19	DATA WAS NOT RECORDED							
OW-59	02/13/19	1617	7.98	11.05	11001	7.164	6.25	2.46	51.3
OW-60	02/13/19	DATA WAS NOT RECORDED							
OW-61	02/19/19	NO SAMPLES COLLECTED - SPH LAYER = 4.09 FEET							
OW-62	02/19/19	NO SAMPLES COLLECTED - SPH LAYER = 1.2 FEET							
OW-63	02/20/19	1003	7.61	10.86	1636	1.064	0.83	5.1	-80.9
OW-64	02/19/19	NO SAMPLES COLLECTED - SPH LAYER = 0.02 FEET							
OW-65	02/19/19	NO SAMPLES COLLECTED - SPH LAYER = 9.27 FEET							
STP1-NW	02/13/19	1337	8.09	12.38	7401	4.81	4.1	3.11	53.7
OAPIS-1	03/28/19	748	7.82	14.13	6246	4.06	3.42	1.46	-51.2
GWM-1	03/28/19	NO SAMPLES COLLECTED - SPH LAYER = 0.48 FEET							
GWM-2	03/28/19	DRY - NO SAMPLES COLLECTED							
GWM-3	03/28/19	DRY - NO SAMPLES COLLECTED							
BW-4A	03/27/19	DRY - NO SAMPLES COLLECTED							
BW-4B	03/27/19	1317	8.85	15.68	1781	1.158	0.91	3.12	28.2
BW-5A	03/27/19	NO SAMPLES COLLECTED - INSUFFICIENT WATER LEVEL							
BW-5B	03/27/19	1024	9.01	16.1	1886	1.226	0.96	2.72	1.02
BW-5C	03/27/19	1115	8.2	15.21	5039	3.276	2.72	0.61	-68.8
SECOND QUARTER 2019									
MKTF-01	05/06/19	NO SAMPLES COLLECTED, SPH LAYER = 0.35 FEET							
MKTF-02	05/06/19	1143	6.84	12.31	7280	4.732	4.03	1.74	-95.2
MKTF-03	05/13/19	NO SAMPLES COLLECTED, SPH LAYER = 1.11 FEET							
MKTF-04	05/13/19	1353	6.25	13.61	2882	1.873	1.51	2.3	-63.7
MKTF-05	05/13/19	NO SAMPLES COLLECTED, SPH LAYER = 0.17 FEET							
MKTF-06	05/13/19	NO SAMPLES COLLECTED, SPH LAYER = 0.84 FEET							
MKTF-07	05/14/19	NO SAMPLES COLLECTED, SPH LAYER = 0.1 FEET							
MKTF-08	05/13/19	NO SAMPLES COLLECTED, SPH LAYER = 0.48 FEET							
MKTF-09	05/13/19	1332	6.52	14.27	2553	1.66	1.33	2.41	-74.3
MKTF-10	05/13/19	1438	6.24	15.95	3005	1.953	1.57	1.78	-87.1
MKTF-11	05/13/19	1418	6.4	15.93	4551	2.958	2.44	1.87	84.8
MKTF-12	05/09/19	NO SAMPLES COLLECTED, SPH LAYER = 0.1 FEET							
MKTF-13	05/09/19	DATA WAS NOT RECORDED							
MKTF-14	05/09/19	NO SAMPLES COLLECTED, SPH LAYER = 0.39 FEET							
MKTF-15	05/13/19	1114	6.12	14.33	15039	9.775	8.79	1.36	-84.9
MKTF-16	05/14/19	734	6.16	15.96	5234	3.402	2.84	0.97	-78
MKTF-17	05/09/19	1257	6.36	11.94	2579	1.676	1.34	1	-93.8
MKTF-18	05/16/19	1156	6.52	16.01	2180	1.417	1.12	3.14	-94.8
MKTF-19	05/09/19	DATA WAS NOT RECORDED							
MKTF-20	05/14/19	746	5.93	15.64	14140	9.191	8.23	0.72	-79.1
MKTF-21	05/14/19	812	6	14.6	3582	2.328	1.9	0.56	-90.6
MKTF-22	05/09/19	1118	6.39	12.45	2459	1.598	1.28	2.07	-81.4
MKTF-23	05/09/19	NO SAMPLES COLLECTED, SPH LAYER = 0.07 FEET							

TABLE 2.1

SUMMARY OF 2019 FINAL WATER QUALITY READINGS

MARATHON PETROLEUM COMPANY - GALLUP REFINERY - GALLUP, NEW MEXICO

SAMPLE ID	DATE	TIME	pH	TEMP ˚C	CONDUCTIVITY (Ms/cm), Spec. Cond	TDS (g/L), TDS (mg/L)	SALINITY (ppt)	DO (mg/L)	ORP (Mv)
MKTF-24	05/06/19	1328	6.67	14.32	5179	3366	2.8	2.12	-81.9
MKTF-25	05/06/19	1543	6.59	10.81	5121	3.3	2.78	1.6	50.1
MKTF-26	05/06/19	NO SAMPLES COLLECTED, SPH LAYER = 0.85 FEET							
MKTF-27	05/06/19	1059	6.52	13.16	16966	11.02	10.01	1.33	86.2
MKTF-28	05/06/19	1038	6.93	17.06	3580	2.327	1.89	3.43	90
MKTF-29	05/06/19	953	6.8	12.93	3344	2.173	1.76	1.66	83.2
MKTF-30	05/06/19	908	7.17	12.79	4323	2.81	2.31	4.45	85.2
MKTF-31	05/06/19	1435	6.54	12.64	5621	3.653	3.06	1.54	81
MKTF-32	05/07/19	939	7.15	13.11	3518	2.287	1.86	1.19	87.3
MKTF-33	05/09/19	1014	6.61	12.23	219	1.371	1.09	1.44	72.3
MKTF-34	05/09/19	936	6.73	13.06	4255	2.766	2.28	6.61	67.8
MKTF-35	05/16/19	1048	6.343	15.57	2414	1.569	1.25	2	-93.3
MKTF-36	05/14/19	NO SAMPLES COLLECTED - UNABLE TO LOCATE WELL							
MKTF-37	05/16/19	NO SAMPLES COLLECTED, SPH LAYER = 0.08 FEET							
MKTF-38	06/27/19	1134	6.67	17.92	2.723	2.047	1.65	2.07	96.9
MKTF-39	06/05/19	1251	6.03	16.72	30440	19.78	18.94	1.08	-95.7
MKTF-40	05/06/19	1515	6.66	13.23	12552	8.159	7.23	4.21	90.1
MKTF-41	05/07/19	1028	7.47	14.51	4148	2.696	2.22	1.94	80.5
MKTF-42	05/07/19	902	7.5	11.86	4671	3.036	2.51	1.1	87.1
MKTF-43	05/08/19	906	6.76	8.55	13815	8.98	7.98	1.81	88.5
MKTF-44	05/08/19	835	7.08	10.3	9845	6.399	5.56	2.79	85.6
MKTF-45	05/14/19	NO SAMPLES COLLECTED, SPH LAYER = 0.59 FEET							
OW-01	05/21/19	1409	7.91	11.9	1852	1.2044	0.95	1.33	-3.3
OW-10	05/28/19	1438	6.8	13.15	3481	2.263	1.84	0.73	43.6
OW-13	05/01/19	1140	7.2	14.75	1623	1.055	0.82	1.71	-16.5
OW-14	05/01/19	1015	6.9	12.66	2400	1.56	1.24	1.06	-121.8
OW-29	05/01/19	1346	6.66	15.35	2522	1.639	1.31	0.91	-16.9
OW-30	06/05/19	819	6.5	13.06	2528	1.643	1.31	0.62	7.1
OW-50	05/01/19	1447	7.3	14.57	1517	1.005	0.78	1.59	48.5
OW-52	05/01/19	1533	7.54	14.63	1319	0.858	0.66	1.1	-21.9
OW-53	05/02/19	DRY - NO SAMPLES COLLECTED							
OW-54	05/02/19	845	6.72	11.91	2687	1.746	1.4	1.68	-50.6
OW-55	05/02/19	942	6.41	13.67	2949	1.917	1.54	1.77	-80.8
OW-56	05/02/19	1207	6.93	12.03	3776	2.454	2	5.13	79.4
OW-57	05/16/19	923	6.33	14.03	2208	1.435	1.14	2.17	-74.9
OW-58	06/05/19	921	6.3	15.7	2357	1.532	1.22	1.37	-99.9
OW-59	05/02/19	1104	6.93	14.73	14271	9.276	8.31	9.42	79.6
OW-60	05/02/19	1227	7.11	13.18	9042	5.877	5.08	5.35	79.6
OW-61	05/15/19	NO SAMPLES COLLECTED, SPH LAYER = 3.51 FEET							
OW-62	05/15/19	NO SAMPLES COLLECTED, SPH LAYER = 0.4 FEET							
OW-63	05/15/19	NO DATA RECORDED							
OW-64	05/15/19	1323	6.82	15.78	292	1.62	1.29	3.86	10.3
OW-65	05/15/19	NO SAMPLES COLLECTED, SPH LAYER = 8.74 FEET							
STP1-NW	05/08/19	NO DATA RECORDED							
OAPIS-1	05/08/19	1113	6.52	13.74	8056	5.236	4.49	0.98	-75.8
GWM-1	05/08/19	NO SAMPLES COLLECTED, SPH LAYER = 0.29 FEET							
GWM-2	05/08/19	DRY - NO SAMPLES COLLECTED							
GWM-3	05/08/19	DRY - NO SAMPLES COLLECTED							
NAPIS-1	05/28/19	NO SAMPLES COLLECTED, SPH LAYER = 0.16 FEET							
NAPIS-2	05/28/19	1134	6.5	21.34	2018	1.312	1.03	1.59	-52.5

TABLE 2.1

SUMMARY OF 2019 FINAL WATER QUALITY READINGS

MARATHON PETROLEUM COMPANY - GALLUP REFINERY - GALLUP, NEW MEXICO

SAMPLE ID	DATE	TIME	pH	TEMP ˚C	CONDUCTIVITY (Ms/cm), Spec. Cond	TDS (g/L), TDS (mg/L)	SALINITY (ppt)	DO (mg/L)	ORP (Mv)
NAPIS-3	05/28/19	1208	7.05	17.18	3592	2.335	1.9	4.47	19.5
KA-3	05/28/19	1154	6.3	21.06	2639	1.715	1.37	2.15	-38.2
BW-4A	05/21/19	DRY - NO SAMPLES COLLECTED							
BW-4B	05/22/19	1144	7.67	13.8	2182	1.418	1.12	1.19	-84.9
BW-5A	05/21/19	NO SAMPLES COLLECTED - INSUFFICIENT WATER LEVEL							
BW-5B	05/22/19	1008	7.8	11.88	2814	1.829	1.47	0.78	8.4
BW-5C	05/21/19	1221	6.86	12.56	6593	4.286	3.63	1.61	-98.8
THIRD QUARTER / ANNUAL									
MKTF-01	08/30/19	NO SAMPLES COLLECTED, SPH LAYER = 0.37 FEET							
MKTF-02	08/23/19	1025	7.08	13.35	6.587	5.487	4.76	3.01	-104.1
MKTF-03	08/21/19	NO SAMPLES COLLECTED, SPH LAYER = 1.23 FEET							
MKTF-04	08/21/19	1027	7.12	14.33	2.139	1.746	1.4	5.69	-82.2
MKTF-05	08/30/19	NO SAMPLES COLLECTED, SPH LAYER = 0.2 FEET							
MKTF-06	08/30/19	NO SAMPLES COLLECTED, SPH LAYER = 0.78 FEET							
MKTF-07	08/30/19	NO SAMPLES COLLECTED, SPH LAYER = 1.11 FEET							
MKTF-08	08/30/19	NO SAMPLES COLLECTED, SPH LAYER = 0.4 FEET							
MKTF-09	08/28/19	911	6.87	14.84	1.978	1.595	1.27	1.76	-117.7
MKTF-10	08/22/19	1140	7.04	18.34	3.913	2.905	2.4	1.36	-97.3
MKTF-11	08/21/19	1403	7.16	16.14	3.414	2.672	2.19	1.36	-115.2
MKTF-12	08/20/19	NO SAMPLES COLLECTED, SPH LAYER = 0.09 FEET							
MKTF-13	08/20/19	NO SAMPLES/DATA COLLECTED - SHEEN & ODOR							
MKTF-14	08/20/19	NO SAMPLES COLLECTED, SPH LAYER = 0.28 FEET							
MKTF-15	08/21/19	NO SAMPLES COLLECTED, SPH LAYER = 0.01 FEET							
MKTF-16	08/22/19	850	6.79	22.88	6.695	4.535	3.83	1.62	-108.4
MKTF-17	08/20/19	1050	6.99	15.03	1.789	1.442	1.14	3.99	-39.8
MKTF-18	08/19/19	NO SAMPLES COLLECTED, SPH LAYER = 0.01 FEET							
MKTF-19	08/19/19	1530	6.89	14.1	2.001	1.643	1.31	1.15	-216.9
MKTF-20	08/21/19	1452	6.35	24.67	12.89	8.43	7.45	0.78	-99.8
MKTF-21	08/22/19	1530	6.92	22.31	2.16	1.479	1.17	0.9	-107.9
MKTF-22	08/20/19	900	7.04	12.4	1.872	1.604	1.28	2.5	-116.1
MKTF-23	08/20/19	NO SAMPLES COLLECTED, SPH LAYER = 0.03 FEET							
MKTF-24	08/23/19	1208	7.28	14	3998	NA	NA	1.8	-8
MKTF-25	08/27/19	1207	6.77	14.93	4.521	3.639	3.05	2.86	-14.7
MKTF-26	08/23/19	NO SAMPLES COLLECTED, SPH LAYER = 0.83 FEET							
MKTF-27	08/21/19	1709	6.85	16.66	12.25	9.457	8.49	1.13	52.3
MKTF-28	08/21/19	1616	7.5	21.64	3.114	2.156	1.74	3.76	11.4
MKTF-29	08/23/19	840	7.37	16.61	3.616	2.797	2.3	1.3	61.2
MKTF-30	08/23/19	933	7.35	16.11	3.739	2.926	2.42	4.48	2.6
MKTF-31	08/23/19	1108	7.4	19.1	3724	NA	NA	1.98	114.6
MKTF-32	08/20/19	1336	7.88	1.98	2.746	2.257	1.84	1.96	78.6
MKTF-33	08/20/19	1129	7.26	12.87	1.588	1.347	1.06	1.66	-55.9
MKTF-34	08/19/19	1110	6.26	14.24	2.903	2.373	1.93	5.7	56.1
MKTF-35	08/19/19	1340	6.46	19	1.921	1.409	1.11	1.15	-109.2
MKTF-36	08/19/19	NO SAMPLES COLLECTED, UNABLE TO LOCATE WELL							
MKTF-37	08/23/19	NO SAMPLES COLLECTED, SPH LAYER = 0.02 FEET							
MKTF-38	08/20/19	1511	7.36	19.34	2.807	2.066	1.67	1.56	93.5
MKTF-39	08/20/19	1649	6.93	19.02	28.76	21.09	20.3	0.95	-102.5
MKTF-40	08/22/19	1603	7	13.59	11.92	9.88	8.89	2.82	NA
MKTF-41	08/22/19	1511	8.17	13.18	3.184	2.661	2.18	1.63	31.1
MKTF-42	08/22/19	1359	8.26	1292	3.581	3.017	2.5	1.27	29.3

TABLE 2.1

SUMMARY OF 2019 FINAL WATER QUALITY READINGS

MARATHON PETROLEUM COMPANY - GALLUP REFINERY - GALLUP, NEW MEXICO

SAMPLE ID	DATE	TIME	pH	TEMP ˚C	CONDUCTIVITY (Ms/cm), Spec. Cond	TDS (g/L), TDS (mg/L)	SALINITY (ppt)	DO (mg/L)	ORP (Mv)
MKTF-43	08/22/19	938	7.32	15.66	13.41	10.6	9.6	2.03	76.1
MKTF-44	08/22/19	850	7.84	12.87	5.243	4.417	3.75	4.13	55.4
MKTF-45	08/19/19	NO SAMPLES COLLECTED, SPH LAYER = 0.46 FEET							
OW-01	08/15/19	1138	9.63	14.34	1.875	1.219	0.96	0.94	52.3
OW-10	08/15/19	1238	8.2	15.79	4.45	2.892	2.39	1.21	69.4
OW-13	08/12/19	1148	7.77	18.68	1641	1.067	0.83	0.68	-58.3
OW-14	08/12/19	UNABLE TO GAUGE/SAMPLE - HAS DEDICATED RECOVERY SYSTEM INSTALLED							
OW-29	08/12/19	947	6.71	14.81	2494	1.613	1.29	0.8	-2.1
OW-30	08/12/19	UNABLE TO GAUGE/SAMPLE - HAS DEDICATED RECOVERY SYSTEM INSTALLED							
OW-50	08/16/19	1034	8.39	14.13	1.523	0.99	0.77	0.64	35.9
OW-52	08/16/19	1107	8.75	13.3	1.299	0.845	0.65	0.86	95.1
OW-53	08/21/19	DRY - NO SAMPLES COLLECTED							
OW-54	08/21/19	1226	7.45	14.3	2286	NA	NA	1.24	16.5
OW-55	08/21/19	UNABLE TO GAUGE/SAMPLE - HAS DEDICATED RECOVERY SYSTEM INSTALLED							
OW-56	08/21/19	1301	7.49	14.2	3118	NA	NA	2.17	70.3
OW-57	08/21/19	1334	7.32	15.3	20.92	NA	NA	1.11	-24.6
OW-58	08/22/19	1558	7.15	16.3	1966	NA	NA	0.73	-74.6
OW-59	08/21/19	1205	7.12	14.4	11631	NA	NA	2.79	94.3
OW-60	08/21/19	1554	7.92	21.6	7674	NA	NA	4.78	85.5
OW-61	08/20/19	NO SAMPLES COLLECTED, SPH LAYER = 2.73 FEET							
OW-62	08/20/19	NO SAMPLES COLLECTED, SPH LAYER = 0.43 FEET							
OW-63	08/19/19	1523	7.19	16.1	1847	NA	NA	1.94	-198.8
OW-64	08/19/19	1555	7.9	18.4	2071	NA	NA	3.86	-0.1
OW-65	08/20/19	NO SAMPLES COLLECTED, SPH LAYER = 9.24 FEET							
STP1-NW	08/21/19	1137	7.84	15.5	8208	NA	NA	1.51	89.8
OAPIS-1	08/22/19	1128	7.23	18.1	6669	NA	NA	0.83	-54.8
GWM-1	08/06/19	NO SAMPLES COLLECTED, SPH LAYER = 0.13 FEET							
GWM-2	08/06/19	DRY - NO SAMPLES COLLECTED							
GWM-3	08/06/19	DRY - NO SAMPLES COLLECTED							
NAPIS-1	08/22/19	NO SAMPLES COLLECTED, SPH LAYER = 0.08 FEET							
NAPIS-2	08/22/19	853	7.47	250	2673	NA	NA	1.58	-57.7
NAPIS-3	08/22/19	1028	8.07	20.7	3144	NA	NA	1.65	82
KA-3	08/22/19	934	7.28	24.6	2518	NA	NA	1.04	-29.9
BW-4A	08/23/19	DRY - NO SAMPLES COLLECTED							
BW-4B	08/23/19	NO DATA RECORDED							
BW-5A	08/15/19	NO SAMPLES COLLECTED - INSUFFICIENT WATER LEVEL							
BW-5B	08/15/19	1446	8.99	13.47	2.828	1.838	1.48	2.3	49.5
BW-5C	08/15/19	901	8.44	13.08	6.413	4.168	3.52	0.58	-140.6
OW-11	08/20/19	1101	8.53	14.5	2923	NA	NA	1.06	53.3
MW-1	08/12/19	1453	9.02	19.35	1440	0.936	0.73	4.34	-120.6
MW-2	08/13/19	1259	9.13	16.45	1454	0.945	0.73	0.7	-124.7
MW-4	08/13/19	1601	8.87	17.06	1527	0.993	0.77	1.35	-112.3
MW-5	08/14/19	1627	9.58	14.76	1.481	0.963	0.75	1.21	52.7
SMW-2	08/22/19	1455	7.45	14.1	12124	NA	NA	1.63	101.9
SMW-4	08/13/19	1309	8.59	14.57	1671	1.086	0.85	0.79	-98
BW-1A	08/14/19	NO SAMPLES COLLECTED - INSUFFICIENT WATER LEVEL							
BW-1B	08/14/19	NO SAMPLES COLLECTED - INSUFFICIENT WATER LEVEL							
BW-1C	08/14/19	950	8.96	17.82	1732	1.126	0.88	1.17	-117.1
BW-2A	08/14/19	1107	8.38	14.67	1.76	1.144	0.9	0.86	-117.9
BW-2B	08/14/19	1039	8.7	15.55	2.875	1.869	1.5	1.04	-121.3

TABLE 2.1

SUMMARY OF 2019 FINAL WATER QUALITY READINGS

MARATHON PETROLEUM COMPANY - GALLUP REFINERY - GALLUP, NEW MEXICO

SAMPLE ID	DATE	TIME	pH	TEMP ˚C	CONDUCTIVITY (Ms/cm), Spec. Cond	TDS (g/L), TDS (mg/L)	SALINITY (ppt)	DO (mg/L)	ORP (Mv)
BW-2C	08/14/19	1213	9.01	16.45	1.746	1.135	0.89	1.01	28.8
BW-3A	08/14/19	DRY - NO SAMPLES COLLECTED							
BW-3B	08/14/19	1418	8.6	13.54	1.963	1.276	1.01	0.29	-171.5
BW-3C	08/14/19	1344	9.11	16.4	1.967	1.279	1	2.98	-57
4TH QUARTER 2019									
MKTF-01	11/19/19	NO SAMPLES COLLECTED, SPH LAYER = 0.31 FEET							
MKTF-02	11/19/19	1308	7.55	14.3	8.18	5317	4.56	3.52	145
MKTF-03	10/30/19	NO SAMPLES COLLECTED, SPH LAYER = 1.3 FEET							
MKTF-04	10/30/19	1426	7.39	10.4	2.35	1527.5	1.22	2.49	40.1
MKTF-05	10/30/19	NO SAMPLES COLLECTED, SPH LAYER = 0.3 FEET							
MKTF-06	10/30/19	NO SAMPLES COLLECTED, SPH LAYER = 1.11 FEET							
MKTF-07	10/30/19	NO SAMPLES COLLECTED, SPH LAYER = 1.19 FEET							
MKTF-08	10/30/19	NO SAMPLES COLLECTED, SPH LAYER = 0.45 FEET							
MKTF-09	11/18/19	1448	7.41	16.1	2.02	1313	1.03	1.46	29.8
MKTF-10	10/30/19	1521	7.18	13.6	4.48	2912	2.4	1.4	-1.2
MKTF-11	10/30/19	1451	7.61	11.6	4.37	2840.6	2.34	1.66	8.9
MKTF-12	10/28/19	NO SAMPLES COLLECTED, SPH LAYER = 0.12 FEET							
MKTF-13	10/29/19	1016	7.24	13.8	2.42	1573	1.25	0.85	-8.4
MKTF-14	10/28/19	NO SAMPLES COLLECTED, SPH LAYER = 0.37 FEET							
MKTF-15	10/30/19	NO SAMPLES COLLECTED, SPH LAYER = 0.05 FEET							
MKTF-16	10/30/19	NO DATA RECORDED							
MKTF-17	10/29/19	838	7.49	14	2.11	1371.5	1.09	2.27	169.9
MKTF-18	10/29/19	1058	7.5	12.8	1.89	1228.5	0.97	1.46	67.3
MKTF-19	10/29/19	910	7.28	14.5	2.06	1339	1.06	1.1	13.9
MKTF-20	11/05/19	NO DATA RECORDED							
MKTF-21	11/05/19	NO DATA COLLECTED - SHEEN & ODOR							
MKTF-22	10/24/19	1414	7.34	12.6	2.01	1306.5	1.03	1.88	39.9
MKTF-23	10/09/19	NO DATA COLLECTED - SHEEN & ODOR							
MKTF-24	10/23/19	958	7.44	13	3.54	2301	1.87	2.27	189.4
MKTF-25	10/23/19	1032	7.26	12.8	5.49	3568	2.98	2.66	179.1
MKTF-26	10/22/19	NO SAMPLES COLLECTED, SPH LAYER = 0.73 FEET							
MKTF-27	10/23/19	934	7.28	16.9	10.56	6929	6.07	2.49	200.2
MKTF-28	10/22/19	1059	7.77	18	2.99	1943.5	1.56	1.77	194.3
MKTF-29	10/22/19	1033	7.47	15.6	4.72	3068	2.54	2.77	208.6
MKTF-30	10/23/19	846	7.76	17.1	3.67	2385.5	1.95	4.25	189.4
MKTF-31	10/22/19	1406	7.37	18	3.31	2151.5	1.74	1.63	102.9
MKTF-32	10/23/19	1251	8.13	14.7	2.76	1794	1.44	3.73	201.2
MKTF-33	10/24/19	1316	7.66	12.6	1.78	1157	0.91	1.42	206
MKTF-34	10/29/19	1246	7.73	12.2	2.73	1774.5	1.42	4.89	168.3
MKTF-35	10/29/19	1141	7.39	15.7	1.98	1287	1.02	1.11	14.9
MKTF-36	10/28/19	NO SAMPLES COLLECTED, UNABLE TO LOCATE WELL							
MKTF-37	10/28/19	NO SAMPLES COLLECTED, SPH LAYER = 0.03 FEET							
MKTF-38	12/03/19	1356	7.5	15.1	2.44	1586	1.26	166	239.8
MKTF-39	11/05/19	1002	7.02	16.4	25.65	16672.5	15.7	1.24	-20
MKTF-40	10/22/19	1451	7.33	15.5	10.9	7091.5	6.22	3.51	181.2
MKTF-41	10/23/19	1344	8.49	13.9	3.35	2177.5	1.77	1.61	205.3
MKTF-42	10/23/19	1429	8.13	14.9	3.81	2476.5	2.03	0.64	197.6
MKTF-43	10/24/19	1021	7.34	14.6	16.04	10426	9.43	1.41	217.2

TABLE 2.1

SUMMARY OF 2019 FINAL WATER QUALITY READINGS

MARATHON PETROLEUM COMPANY - GALLUP REFINERY - GALLUP, NEW MEXICO

SAMPLE ID	DATE	TIME	pH	TEMP ˚C	CONDUCTIVITY (Ms/cm), Spec. Cond	TDS (g/L), TDS (mg/L)	SALINITY (ppt)	DO (mg/L)	ORP (Mv)
MKTF-44	10/24/19	DID NOT RECORD DATA							
MKTF-45	10/28/19	NO SAMPLES COLLECTED, SPH LAYER = 1.03 FEET							
OW-01	10/16/19	1541	9.02	13.5	1.5	975	0.76	0.51	171.6
OW-10	10/17/19	826	7.82	12	6.04	3926	3.3	1.91	249.9
OW-13	10/14/19	1246	8.18	13.3	1.47	975	0.76	1.59	177.9
OW-14	10/14/19	UNABLE TO GAUGE/SAMPLE - HAS DEDICATED RECOVERY SYSTEM INSTALLED							
OW-29	10/14/19	1356	7.58	14.2	NA	1358.5	1.08	3.45	115.3
OW-30	10/14/19	UNABLE TO GAUGE/SAMPLE - HAS DEDICATED RECOVERY SYSTEM INSTALLED							
OW-50	10/15/19	837	8.4	12.3	1.29	838.5	0.65	0.61	165.9
OW-52	10/15/19	923	8.59	12.1	1.24	806	0.62	0.58	124.6
OW-53	10/15/19	DRY - NO SAMPLES COLLECTED							
OW-54	10/15/19	UNABLE TO GAUGE/SAMPLE - HAS DEDICATED RECOVERY SYSTEM INSTALLED							
OW-55	10/15/19	UNABLE TO GAUGE/SAMPLE - HAS DEDICATED RECOVERY SYSTEM INSTALLED							
OW-56	10/15/19	1343	7.51	14.2	2.98	0.937	1.56	2.37	146
OW-57	11/05/19	1102	7.44	14.8	1.95	1267.5	1	1.81	-18.2
OW-58	11/18/19	1051	7.27	14.6	1.95	1267.5	1	0.93	14.1
OW-59	10/15/19	1246	7.68	15.3	11.49	7468	6.57	1.21	178.8
OW-60	10/15/19	1026	7.89	14.5	7.4	4810	4.1	0.82	68.6
OW-61	11/04/19	NO SAMPLES COLLECTED, SPH LAYER = 3.09 FEET							
OW-62	11/18/19	NO SAMPLES COLLECTED, SPH LAYER = 0.62 FEET							
OW-63	11/18/19	1351	7.36	14.6	1.73	1124.5	0.88	1.58	-4.1
OW-64	11/18/19	1326	8.17	15.4	2.11	1365	1.08	4.3	215.7
OW-65	11/04/19	NO SAMPLES COLLECTED, SPH LAYER = 8.55 FEET							
STP1-NW	10/22/19	908	8.19	11.1	7.6	5070	4.33	3.28	224
OAPIS-1	10/21/19	1308	7.42	14.4	6.58	4277	3.62	5	62.2
GWM-1	10/21/19	NO SAMPLES COLLECTED, SPH LAYER = 0.19 FEET							
GWM-2	10/19/19	DRY - NO SAMPLES COLLECTED							
GWM-3	10/19/19	DRY - NO SAMPLES COLLECTED							
NAPIS-1	10/21/19	NO SAMPLES COLLECTED, SPH LAYER = 0.2 FEET							
NAPIS-2	10/21/19	1056	7.54	21.9	1.82	1176.5	0.92	0.63	-5.3
NAPIS-3	10/21/19	1158	8.05	18.5	3.09	2008.5	1.62	2.08	151.7
KA-3	10/21/19	1126	7.4	22.6	2.39	1553.5	1.23	2.64	81.5
BW-4A	10/16/19	DRY - NO SAMPLES COLLECTED							
BW-4B	10/16/19	NO SAMPLES COLLECTED - INSUFFICIENT WATER LEVEL							
BW-5A	10/16/19	NO SAMPLES COLLECTED - INSUFFICIENT WATER LEVEL							
BW-5B	10/16/19	1335	8.79	12.9	2.48	1612	1.29	2.26	197.3
BW-5C	10/16/19	1401	7.96	12.6	5.33	3464.5	2.89	1.22	70.1
OW-12	12/03/19	1432	9.36	13.2	1.29	780	0.6	1.43	205.1
SAMPLE ID	**DATE**	**TIME**	**pH**	**TEMP ˚F**	**CONDUCTIVITY (uS/cm)**	**TDS (mg/L)**	**SALINITY (ppt)**	**DO (mg/L)**	**ORP (Mv)**
MKTF-46	12/02/19	1235	6.71	60.6	2642	2089	NR	3.49	268.3
MKTF-47	12/02/19	1340	7.11	68.0	1720	1235	NR	4.39	254.9
MKTF-48	12/02/19	1455	6.67	84.1	2060	1300	NR	0.61	66.7
MKTF-49	12/03/19	1025	NO DATA COLLECTED - SHEEN & ODOR						
MKTF-50	12/03/19	1155	NO DATA COLLECTED - SHEEN & ODOR						
OW-58A	12/03/19	1315	NO DATA COLLECTED - SHEEN & ODOR						

8.1 BW-1C, BW-2A, BW-2B, BW-2C, BW-3B, BW-3C, BW-5A, BW-5B, BW-5C
BTEX and MTBE Analytical Result Summary

			PARAMETERS				
STANDARDS			Benzene (mg/L)	Toluene (mg/L)	Ethylbenzene (mg/L)	Total Xylenes (mg/L)	MTBE (mg/L)
WQCC 20 NMAC 6.2.3103 (DECEMBER 2018)			0.005	1	0.7	0.62	0.1
40 CFR 141.61 MCL			0.005	1.0	0.7	10	NE
NMED TAP WATER (Rev 2. JUN 2019)			0.00455	1.09	0.0149	0.193	0.143
EPA RSL for Tap Water (NOV 2019)			0.00046	1.1	0.0015	0.19	0.14
WELL ID	DATE SAMPLED	METHOD					
BW-1A	08/14/19		Dry				
BW-1B	08/14/19		Dry				
BW-1C	08/14/19	8260B	<0.001	<0.001	<0.001	<0.0015	<0.001
	09/12/18	8260B	<0.001	<0.001	<0.001	<0.0015	<0.001
	09/13/17	8260B	<0.001	<0.001	<0.001	<0.0015	<0.001
	09/08/16	8260B	<0.001	<0.001	<0.001	<0.0015	<0.001
	08/12/15	8260B	<0.001	<0.001	<0.001	<0.0015	<0.001
	09/10/14	8260B	<0.001	<0.001	<0.001	<0.0015	<0.001
	09/09/13	8260B	<0.001	<0.001	<0.001	<0.0015	<0.001
	08/24/12	8260B	<0.001	<0.001	<0.001	<0.0015	<0.001
	10/28/11	8260B	<0.001	<0.001	<0.001	<0.0015	<0.001
	07/20/10	8260B	<0.001	<0.001	<0.001	<0.0015	<0.001
BW-2A	08/14/19	8260B	<0.001	<0.001	<0.001	<0.0015	<0.001
	09/12/18	8260B	<0.001	<0.001	<0.001	<0.0015	<0.001
	09/13/17	8260B	<0.001	<0.001	<0.001	<0.0015	<0.001
	09/08/16	8260B	<0.001	<0.001	<0.001	<0.0015	<0.001
	08/12/15	8260B	<0.001	<0.001	<0.001	<0.0015	<0.001
	09/09/14	8260B	<0.001	<0.001	<0.001	<0.0015	<0.001
	09/09/13	8260B	<0.001	<0.001	<0.001	<0.0015	<0.001
	08/24/12	8260B	<0.001	<0.001	<0.001	<0.0015	<0.001
	10/28/11	8260B	<0.001	<0.001	<0.001	<0.0015	<0.001
	07/20/10	8260B	<0.001	<0.001	<0.001	<0.0015	<0.001
BW-2B	08/15/19	8260B	<0.001	<0.001	<0.001	<0.0015	<0.001
	09/12/18	8260B	<0.001	<0.001	<0.001	<0.0015	<0.001
	09/13/17	8260B	<0.001	<0.001	<0.001	<0.0015	<0.001
	09/08/16	8260B	<0.001	<0.001	<0.001	<0.0015	<0.001
	08/12/15	8260B	<0.001	<0.001	<0.001	<0.0015	<0.001
	09/09/14	8260B	<0.001	<0.001	<0.001	<0.0015	<0.001
	09/09/13	8260B	<0.001	<0.001	<0.001	<0.0015	<0.001
	08/24/12	8260B	<0.001	<0.001	<0.001	<0.0015	<0.001
	10/28/11	8260B	<0.001	<0.001	<0.001	<0.0015	<0.001
	07/20/10	8260B	<0.001	<0.001	<0.001	<0.0015	<0.001
BW-2C	08/15/19	8260B	<0.001	<0.001	<0.001	<0.0015	<0.001
	09/18/18	8260B	<0.001	<0.001	<0.001	<0.0015	<0.001
	09/13/17	8260B	<0.001	<0.001	<0.001	<0.0015	<0.001
	09/08/16	8260B	<0.001	<0.001	<0.001	<0.0015	<0.001
	08/12/15	8260B	<0.001	<0.001	<0.001	<0.0015	<0.001
	09/10/14	8260B	<0.001	<0.001	<0.001	<0.0015	<0.001
	09/09/13	8260B	<0.001	<0.001	<0.001	<0.0015	<0.001
	08/24/12	8260B	<0.001	<0.001	<0.001	<0.0015	<0.001
	10/28/11	8260B	<0.001	<0.001	<0.001	<0.0015	<0.001
	07/20/10	8260B	<0.001	<0.001	<0.001	<0.0015	<0.001
BW-3A	08/14/19	8260B	Dry				

8.1 BW-1C, BW-2A, BW-2B, BW-2C, BW-3B, BW-3C, BW-5A, BW-5B, BW-5C
BTEX and MTBE Analytical Result Summary

			PARAMETERS				
STANDARDS			Benzene (mg/L)	Toluene (mg/L)	Ethylbenzene (mg/L)	Total Xylenes (mg/L)	MTBE (mg/L)
WQCC 20 NMAC 6.2.3103 (DECEMBER 2018)			0.005	1	0.7	0.62	0.1
40 CFR 141.61 MCL			0.005	1.0	0.7	10	NE
NMED TAP WATER (Rev 2. JUN 2019)			0.00455	1.09	0.0149	0.193	0.143
EPA RSL for Tap Water (NOV 2019)			0.00046	1.1	0.0015	0.19	0.14
WELL ID	DATE SAMPLED	METHOD					
BW-3B	08/14/19	8260B	<0.001	<0.001	<0.001	<0.0015	<0.001
	09/12/18	8260B	<0.001	<0.001	<0.001	<0.0015	<0.001
	09/13/17	8260B	<0.001	<0.001	<0.001	<0.0015	<0.001
	09/08/16	8260B	<0.001	<0.001	<0.001	<0.0015	<0.001
	08/12/15	8260B	<0.001	<0.001	<0.001	<0.0015	<0.001
	09/10/14	8260B	<0.001	<0.001	<0.001	<0.0015	<0.001
	09/09/13	8260B	<0.001	<0.001	<0.001	<0.0015	<0.001
	08/23/12	8260B	<0.001	<0.001	<0.001	<0.0015	<0.001
	10/28/11	8260B	<0.001	<0.001	<0.001	<0.0015	<0.001
	07/20/10	8260B	<0.001	<0.001	<0.001	<0.0015	<0.001
BW-3C	08/14/19	8260B	<0.001	<0.001	<0.001	<0.0015	<0.001
	09/18/18	8260B	<0.001	<0.001	<0.001	<0.0015	<0.001
	09/13/17	8260B	<0.001	<0.001	<0.001	<0.0015	<0.001
	09/08/16	8260B	<0.001	<0.001	<0.001	<0.0015	<0.001
	08/12/15	8260B	<0.001	<0.001	<0.001	<0.0015	<0.001
	09/10/14	8260B	<0.001	<0.001	<0.001	<0.0015	<0.001
	09/09/13	8260B	<0.001	<0.001	<0.001	<0.0015	<0.001
	08/23/12	8260B	<0.001	<0.001	<0.001	<0.0015	<0.001
	10/28/11	8260B	<0.001	<0.001	<0.001	<0.0015	<0.001
	07/20/10	8260B	<0.001	<0.001	<0.001	<0.0015	<0.001
BW-4A	03/27/19				Dry		
	05/21/19				Dry		
	08/23/19				Dry		
	10/16/19				Dry		
BW-4B [1]	08/23/19	8260B	<0.001	<0.001	<0.001	<0.0015	<0.001
	05/22/19	8260B	<0.001	<0.001	<0.001	<0.0015	<0.001
	03/27/19	8260B	<0.001	<0.001	<0.001	<0.0015	<0.001
	11/13/18	8260B	<0.001	<0.001	<0.001	<0.0015	<0.001
BW-5A	03/27/19				Dry		
	05/21/19				Dry		
	08/23/19				Dry		
	10/16/19				Dry		
BW-5B	10/16/19	8260B	<0.001	<0.001	<0.001	<0.0015	0.0012
	08/15/19	8260B	<0.001	<0.001	<0.001	<0.0015	0.0092
	05/22/19	8260B	<0.001	<0.001	<0.001	<0.0015	0.0095
	03/27/19	8260B	<0.001	<0.001	<0.001	<0.0015	0.0011
	11/13/18	8260B	<0.001	<0.001	<0.001	<0.0015	0.005
	09/10/18	8260B	<0.001	0.00024	<0.001	<0.0015	0.0052
	05/14/18	8260B	<0.001	0.00023	<0.001	<0.0015	0.0028
	02/26/18	8260B	<0.001	0.00076	<0.001	<0.0015	0.0018
	12/08/17	8260B	<0.001	0.0018	<0.001	<0.0015	0.00064

8.1 BW-1C, BW-2A, BW-2B, BW-2C, BW-3B, BW-3C, BW-5A, BW-5B, BW-5C
BTEX and MTBE Analytical Result Summary

STANDARDS			PARAMETERS				
			Benzene (mg/L)	Toluene (mg/L)	Ethylbenzene (mg/L)	Total Xylenes (mg/L)	MTBE (mg/L)
WQCC 20 NMAC 6.2.3103 (DECEMBER 2018)			**0.005**	**1**	**0.7**	**0.62**	**0.1**
40 CFR 141.61 MCL			0.005	1.0	0.7	10	NE
NMED TAP WATER (Rev 2. JUN 2019)			0.00455	1.09	0.0149	0.193	0.143
EPA RSL for Tap Water (NOV 2019)			0.00046	1.1	0.0015	0.19	0.14
WELL ID	**DATE SAMPLED**	**METHOD**					
BW-5C	10/16/19	8260B	<0.001	<0.001	<0.001	<0.0015	0.024
	08/15/19	8260B	<0.001	<0.001	<0.001	<0.0015	0.029
	05/21/19	8260B	<0.001	<0.001	<0.001	<0.0015	0.036
	03/27/19	8260B	<0.001	<0.001	<0.001	<0.0015	0.025
	11/13/18	8260B	<0.001	<0.001	<0.001	<0.0015	0.028
	09/10/18	8260B	<0.001	<0.001	<0.001	<0.0015	0.03
	05/14/18	8260B	<0.001	<0.001	<0.001	<0.0015	0.032
	02/26/18	8260B	<0.001	0.000078	<0.001	<0.0015	0.036
	12/08/17	8260B	<0.001	<0.001	<0.001	<0.0015	0.039

DEFINITIONS
NA = Not analyzed; NE = Not established
Bold and highlighted values represent values above the applicable standards
STANDARDS
WQCC 20 NMAC 6.2.3103 - Standards for Ground Water of 10,000 mg/l TDS Concentration or Less.
a) Human Health Standards; b) Other Standards for Domestic Water
40 CFR 141.61 Maximum Contaminant Levels for Organic Contaminants
NMED Risk Assessment Guidance for Investigations and Remediations Table A-1
EPA Regional Screening Level (RSL) Summary Table
NOTES
Wells marked in red were not sampled because the well was dry
1) Did not sample BW-4B in the 4th Qtr 2019 - not enough water for sampling. Recharge slow.

Released to Imaging: 11/23/2022 9:27:32 AM

Received by OCD: 12/16/2021 8:08:27 AM

8.1.1 BW-1C, BW-2A, BW-2B, BW-2C, BW-3B, BW-3C, BW-5A, BW-5B, BW-5C
General Chemistry and DRO/GRO/MRO Analytical Result Summary

			PARAMETERS									
STANDARDS			Fluoride (mg/L)	Chloride (mg/L)	Bromide (mg/L)	Nitrite (mg/L)	Nitrate (mg/L)	Phosphorus (mg/L)	Sulfate (mg/L)	DRO (mg/L)	GRO (mg/L)	MRO (mg/L)
WQCC 20 NMAC 6.2.3103 (DEC 2018)			**1.6**	**250.0**	NE	**1**	**10**	NE	**600.0**	NE	NE	NE
40 CFR 141.62 MCL			4.0	NE	NE	1	10	NE	NE	NE	NE	NE
NMED TAP WATER (MAR 2019)			1.18	NE	NE	1.97	31.59	NE	NE	NE	NE	NE
EPA RSL for Tap Water (NOV 2018)			0.8	NE	NE	2	32	NE	NE	NE	NE	NE
NMED SSG (JUNE 2019)			NE	NE	NE	NE	NE	NE	NE	**0.0167**	**0.0101**	**0.0858**
WELL ID	**DATE SAMPLED**	**METHOD**										
BW-1A	08/14/19		Dry									
BW-1B	08/14/19		Dry									
BW-1C	08/14/19	300.0/8015D	**2.2**	33	0.15	0.066	<0.5	<2.5	250	*<1.0**	*<0.05**	*<5.0**
	09/12/18	300.0/8015D	**2.4**	33	0.16	*<1.0**	<1.0	<2.5	230	*<1.0**	*<0.05**	*<5.0**
	09/13/17	300.0/8015D	**2.1**	32	0.15	<0.5	<0.5	<2.5	230	*<1.0**	*<0.05**	*<5.0**
	09/08/16	300.0/8015D	**2.4**	32	0.12	*<1.0**	<1.0	0.36	240	*<1.0**	*<0.05**	*<5.0**
	08/12/15	300.0/8015D	**2.5**	33	<0.1	<0.1	<0.1	<0.5	250	*<1.0**	*<0.05**	*<5.0**
	09/10/14	300.0	**2.6**	33	0.12	*<1.0**	<1.0	<0.5	260			
	09/09/13	300.0	**2.1**	34	<0.1	**14**	**14**	<0.5	260			
	08/24/12	300.0	**2.3**	34	<0.1	*<1.0**	<1.0	<0.5	260			
	10/28/11	300.0	**2.6**	33	<0.1	**1.7**	1.7	<0.5	260			
	07/20/10	300.0	**2.7**	37	0.11	*<1.0**	<1.0	<0.5	290			
BW-2A	08/14/19	300.0/8015D	1.1	38	0.46	<0.5	<0.5	<2.5	6.8	*<1.0**	*<0.05**	*<5.0**
	09/12/18	300.0/8015D	1	38	0.43	*<1.0**	<1.0	0.71	7.3	*<1.0**	*<0.05**	*<5.0**
	09/13/17	300.0/8015D	0.99	36	0.44	<0.5	<0.5	<2.5	6.4	*<1.0**	*<0.05**	*<5.0**
	09/08/16	300.0/8015D	0.98	36	0.42	*<1.0**	<1.0	0.94	7.3	*<1.0**	*<0.05**	*<5.0**
	08/12/15	300.0/8015D	1.1	36	0.2	*<1.0**	<1.0	0.72	7.3	*<1.0**	*<0.05**	*<5.0**
	09/09/14	300.0	1.1	37	0.4	*<1.0**	<1.0	0.57	7.1			
	09/09/13	300.0	0.9	37	0.39	**3.5**	3.5	<0.5	7.2			
	08/24/12	300.0	0.95	38	0.54	*<1.0**	<1.0	<0.5	6.8			
	10/28/11	300.0	1.1	37	0.36	*<1.0**	<1.0	0.58	7.0			
	07/20/10	300.0	1.2	42	0.43	*<1.0**	<1.0	0.68	7.1			

Released to Imaging: 11/23/2022 9:27:32 AM

Received by OCD: 12/16/2021 8:08:27 AM

8.1.1 BW-1C, BW-2A, BW-2B, BW-2C, BW-3B, BW-3C, BW-5A, BW-5B, BW-5C General Chemistry and DRO/GRO/MRO Analytical Result Summary

			PARAMETERS									
STANDARDS			Fluoride (mg/L)	Chloride (mg/L)	Bromide (mg/L)	Nitrite (mg/L)	Nitrate (mg/L)	Phosphorus (mg/L)	Sulfate (mg/L)	DRO (mg/L)	GRO (mg/L)	MRO (mg/L)
WQCC 20 NMAC 6.2.3103 (DEC 2018)			**1.6**	**250.0**	NE	**1**	**10**	NE	**600.0**	NE	NE	NE
40 CFR 141.62 MCL			4.0	NE	NE	1	10	NE	NE	NE	NE	NE
NMED TAP WATER (MAR 2019)			1.18	NE	NE	1.97	31.59	NE	NE	NE	NE	NE
EPA RSL for Tap Water (NOV 2018)			0.8	NE	NE	2	32	NE	NE	NE	NE	NE
NMED SSG (JUNE 2019)			NE	NE	NE	NE	NE	NE	NE	**0.0167**	**0.0101**	**0.0858**
WELL ID	DATE SAMPLED	METHOD										
BW-2B	08/14/19	300.0/8015D	**1.5**	31	0.71	0.068	0.065	<2.5	200	*<1.0**	*<0.05**	*<5.0**
	09/12/18	300.0/8015D	**1.7**	31	0.74	<0.5	<0.5	<2.5	190	*<1.0**	*<0.05**	*<5.0**
	09/13/17	300.0/8015D	1.5	29	0.73	<0.5	<0.5	<2.5	180	*<1.0**	*<0.05**	*<5.0**
	09/08/16	300.0/8015D	1.5	30	0.7	<1.0	<1.0	<0.5	170	*<1.0**	*<0.05**	*<5.0**
	08/12/15	300.0/8015D	**1.8**	29	0.14	**1.5**	1.5	<0.5	160	*<1.0**	*<0.05**	*<5.0**
	09/09/14	300.0	1.6	29	0.43	*<1.0**	<1.0	<0.5	160			
	09/09/13	300.0	**1.7**	28	0.14	**33**	**33**	<0.5	150			
	08/24/12	300.0	1.3	27	0.22	**1.4**	1.4	<0.5	150			
	10/28/11	300.0	1.6	27	0.75	*<1.0**	<1.0	<0.5	140			
	07/20/10	300.0	**1.8**	32	0.82	*<1.0**	<1.0	<0.5	160			
BW-2C	08/14/19	300.0/8015D	**1.8**	46	<0.50	<0.5	<0.5	<2.5	260	*<1.0**	*<0.05**	*<5.0**
	09/18/18	300.0/8015D	**1.7**	48	0.14	0.4	0.4	0.91	270	*<1.0**	*<0.05**	*<5.0**
	09/13/17	300.0/8015D	**1.8**	44	0.13	0.11	<0.5	<2.5	260	*<1.0**	*<0.05**	*<5.0**
	09/08/16	300.0/8015D	**1.9**	42	0.098	*<1.0**	<1.0	<0.5	270	*<1.0**	*<0.05**	*<5.0**
	08/12/15	300.0/8015D	**1.9**	42	0.11	*<1.0**	<1.0	<0.5	270	*<1.0**	*<0.05**	*<5.0**
	09/10/14	300.0	**2.0**	42	0.11	*<1.0**	<1.0	<0.5	260			
	09/09/13	300.0	1.6	43	<0.1	**37**	**37**	<0.5	270			
	08/24/12	300.0	**2.0**	41	<0.5	*<1.0**	<1.0	<2.5	270			
	10/28/11	300.0	**2.0**	43	<0.1	*<1.0**	<1.0	<0.5	280			
	07/20/10	300.0	**2.1**	62	0.12	*<1.0**	<1.0	<0.5	310			
BW-3A	08/14/19		Dry									

Released to Imaging: 11/23/2022 9:27:32 AM

Received by OCD: 12/16/2021 8:08:27 AM

8.1.1 BW-1C, BW-2A, BW-2B, BW-2C, BW-3B, BW-3C, BW-5A, BW-5B, BW-5C General Chemistry and DRO/GRO/MRO Analytical Result Summary

			PARAMETERS									
STANDARDS			Fluoride (mg/L)	Chloride (mg/L)	Bromide (mg/L)	Nitrite (mg/L)	Nitrate (mg/L)	Phosphorus (mg/L)	Sulfate (mg/L)	DRO (mg/L)	GRO (mg/L)	MRO (mg/L)
WQCC 20 NMAC 6.2.3103 (DEC 2018)			**1.6**	**250.0**	NE	**1**	**10**	NE	**600.0**	NE	NE	NE
40 CFR 141.62 MCL			4.0	NE	NE	1	10	NE	NE	NE	NE	NE
NMED TAP WATER (MAR 2019)			1.18	NE	NE	1.97	31.59	NE	NE	NE	NE	NE
EPA RSL for Tap Water (NOV 2018)			0.8	NE	NE	2	32	NE	NE	NE	NE	NE
NMED SSG (JUNE 2019)			NE	NE	NE	NE	NE	NE	NE	**0.0167**	**0.0101**	**0.0858**
WELL ID	**DATE SAMPLED**	**METHOD**										
BW-3B	08/14/19	300.0/8015D	1.4	31	0.41	<0.5	<0.5	<2.5	48	*<1.0**	*<0.05**	*<5.0**
	09/12/18	300.0/8015D	1.3	31	0.45	<0.5	0.063	1.2	44	*<1.0**	*<0.05**	*<5.0**
	09/13/17	300.0/8015D	1.4	29	0.44	<0.5	<0.5	<2.5	38	*<1.0**	*<0.05**	*<5.0**
	09/08/16	300.0/8015D	1.2	30	0.41	*<1.0**	<1.0	1.3	50	*<1.0**	*<0.05**	*<5.0**
	08/12/15	300.0/8015D	1.3	31	0.18	*<1.0**	<1.0	1.1	46	*<1.0**	*<0.05**	*<5.0**
	09/10/14	300.0	1.6	35	0.44	*<1.0**	<1.0	1.0	54			
	09/09/13	300.0	1.1	30	0.36	**11**	**11**	0.87	45			
	08/23/12	300.0	1.2	33	0.39	*<1.0**	<1.0	0.82	46			
	10/28/11	300.0	1.3	28	0.31	*<1.0**	<1.0	0.84	48			
	07/20/10	300.0	1.4	33	0.42	<0.01	<0.01	1.1	54			
BW-3C	08/14/19	300.0/8015D	1.5	36	<0.5	<0.5	<0.5	<2.5	330	*<1.0**	*<0.05**	*<5.0**
	09/18/18	300.0/8015D	1.3	38	0.18	<0.5	0.061	0.85	320	*<1.0**	*<0.05**	*<5.0**
	09/13/17	300.0/8015D	1.2	36	0.42	*<1.0**	<1.0	<2.5	320	*<1.0**	*<0.05**	*<5.0**
	09/08/16	300.0/8015D	1.3	35	0.12	*<1.0**	<1.0	<0.5	330	*<1.0**	*<0.05**	*<5.0**
	08/12/15	300.0/8015D	1.3	36	0.12	*<1.0**	<1.0	<0.5	340	*<1.0**	*<0.05**	*<5.0**
	09/10/14	300.0	1.3	35	0.14	*<1.0**	<1.0	<0.5	300			
	09/09/13	300.0	1.0	35	<0.1	*<1.0**	<1.0	<0.5	320			
	08/23/12	300.0	1.1	38	0.11	*<1.0**	<1.0	<0.5	310			
	10/28/11	300.0	1.4	35	<0.1	*<1.0**	<1.0	<0.5	320			
	07/20/10	300.0	1.4	41	0.12	<0.1	0.12	<0.5	380			
BW-4A	03/27/19		Dry									
	05/21/19		Dry									
	08/23/19		Dry									
	10/16/19		Dry									

Released to Imaging: 11/23/2022 9:27:32 AM

Received by OCD: 12/16/2021 8:08:27 AM

8.1.1 BW-1C, BW-2A, BW-2B, BW-2C, BW-3B, BW-3C, BW-5A, BW-5B, BW-5C General Chemistry and DRO/GRO/MRO Analytical Result Summary

STANDARDS			PARAMETERS									
			Fluoride (mg/L)	Chloride (mg/L)	Bromide (mg/L)	Nitrite (mg/L)	Nitrate (mg/L)	Phosphorus (mg/L)	Sulfate (mg/L)	DRO (mg/L)	GRO (mg/L)	MRO (mg/L)
WQCC 20 NMAC 6.2.3103 (DEC 2018)			**1.6**	**250.0**	NE	**1**	**10**	NE	**600.0**	NE	NE	NE
40 CFR 141.62 MCL			4.0	NE	NE	1	10	NE	NE	NE	NE	NE
NMED TAP WATER (MAR 2019)			1.18	NE	NE	1.97	31.59	NE	NE	NE	NE	NE
EPA RSL for Tap Water (NOV 2018)			0.8	NE	NE	2	32	NE	NE	NE	NE	NE
NMED SSG (JUNE 2019)			NE	NE	NE	NE	NE	NE	NE	**0.0167**	**0.0101**	**0.0858**
WELL ID	**DATE SAMPLED**	**METHOD**										
BW-4B [1]	08/23/19	300.0/8015D	0.69	73	<0.5	<0.5	<0.5	<2.5	230	*<1.0**	*<0.05**	*<5.0**
	05/22/19	300.0/8015D	0.97	81	<0.5	<0.5	<0.5	<2.5	220	*<1.0**	*<0.05**	*<5.0**
	03/27/19	300.0/8015D	1	84	0.4	<0.5	<0.5	<2.5	220	*<1.0**	*<0.05**	*<5.0**
	11/13/18	300.0/8015D	1.1	89	0.47	<0.5	<0.5	<2.5	250	*<1.0**	*<0.05**	*<5.0**
BW-5A	03/27/19						Dry					
	05/21/19						Dry					
	08/23/19						Dry					
	10/16/19						Dry					
BW-5B	10/16/19	300.0/8015D	0.17	**460**	0.57	0.17	0.17	<2.5	88	*<1.0**	*<0.05**	*<5.0**
	08/15/19	300.0/8015D	0.17	**490**	0.54	<0.5	0.11	<2.5	92	*<1.0**	*<0.05**	*<5.0**
	05/22/19	300.0/8015D	<0.5	**480**	0.5	<0.5	0.17	<2.5	91	*<1.0**	*<0.05**	*<5.0**
	03/27/19	300.0/8015D	<0.5	**340**	0.43	<0.5	0.16	<2.5	96	*<1.0**	*<0.05**	*<5.0**
	11/13/18	300.0/8015D	<0.5	**390**	0.61	<0.5	<0.5	<2.5	94	*<1.0**	*<0.05**	*<5.0**
	09/10/18	300.0/8015D	<0.5	**330**	0.45	<0.5	0.19	1	91	*<1.0**	*<0.05**	*<5.0**
	05/14/18	300.0/8015D	0.088	220	0.39	*<1.0**	<1.0	<0.5	88	*<1.0**	*<0.05**	*<5.0**
	02/26/18	300.0/8015D	<0.5	160	0.39	<0.5	0.16	<2.5	98	*<1.0**	*<0.05**	*<5.0**
	12/08/17	300.0/8015D	0.27	110	0.47	0.15	0.15	<2.5	110	*<1.0**	**0.014**	*<5.0**

Released to Imaging: 11/23/2022 9:27:32 AM

Received by OCD: 12/16/2021 8:08:27 AM

8.1.1 BW-1C, BW-2A, BW-2B, BW-2C, BW-3B, BW-3C, BW-5A, BW-5B, BW-5C General Chemistry and DRO/GRO/MRO Analytical Result Summary

STANDARDS			PARAMETERS									
			Fluoride (mg/L)	Chloride (mg/L)	Bromide (mg/L)	Nitrite (mg/L)	Nitrate (mg/L)	Phosphorus (mg/L)	Sulfate (mg/L)	DRO (mg/L)	GRO (mg/L)	MRO (mg/L)
WQCC 20 NMAC 6.2.3103 (DEC 2018)			**1.6**	**250.0**	NE	**1**	**10**	NE	**600.0**	NE	NE	NE
40 CFR 141.62 MCL			4.0	NE	NE	1	10	NE	NE	NE	NE	NE
NMED TAP WATER (MAR 2019)			1.18	NE	NE	1.97	31.59	NE	NE	NE	NE	NE
EPA RSL for Tap Water (NOV 2018)			0.8	NE	NE	2	32	NE	NE	NE	NE	NE
NMED SSG (JUNE 2019)			NE	NE	NE	NE	NE	NE	NE	**0.0167**	**0.0101**	**0.0858**
WELL ID	**DATE SAMPLED**	**METHOD**										
BW-5C	10/16/19	300.0/8015D	<0.5	**1400**	1.5	*<1.0**	<1.0	<2.5	220	*<1.0**	*<0.05**	*<5.0**
	08/15/19	300.0/8015D	<0.5	**1400**	0.99	<0.5	<0.5	<2.5	220	*<1.0**	*<0.05**	*<5.0**
	05/21/19	300.0/8015D	<0.5	**1400**	1	<0.5	<0.5	<2.5	240	*<1.0**	**0.027**	*<5.0**
	03/27/19	300.0/8015D	<0.5	**1400**	1	<0.5	<0.5	<2.5	230	*<1.0**	*<0.05**	*<5.0**
	11/13/18	300.0/8015D	<0.5	**1300**	1.5	<0.5	<0.5	<2.5	210	*<1.0**	*<0.05**	*<5.0**
	09/10/18	300.0/8015D	<0.5	**1300**	1	<0.5	0.08	1.3	220	*<1.0**	**0.024**	*<5.0**
	05/14/18	300.0/8015D	<0.1	**1300**	0.48	*<1.0**	<1.0	<0.5	190	*<1.0**	*<0.05**	*<5.0**
	02/26/18	300.0/8015D	<0.5	**1300**	1.1	0.32	<0.5	1.4	210	*<1.0**	**0.034**	*<5.0**
	12/08/17	300.0/8015D	<0.5	**1400**	1.2	0.23	0.23	<2.5	210	*<1.0**	**0.035**	*<5.0**

DEFINITIONS

NA = Not analyzed; NE = Not established

Bold and highlighted values represent values above the applicable standards

STANDARDS

WQCC 20 NMAC 6.2.3103 - Standards for Ground Water of 10,000 mg/l TDS Concentration or Less.

a) Human Health Standards; b) Other Standards for Domestic Water

40 CFR 141.62 Maximum Contaminant Levels for Inorganic Contaminants

NMED Risk Assessment Guidance for Investigations and Remediations Table A-1

EPA Regional Screening Level (RSL) Summary Table

NMED Soil Screening Guidance Volume 1, Table 6-4 (groundwater)

NOTES

Wells marked in red were not sampled because the well was dry

Items notes with a * and italics have a detection limit greater than or equal to the applicable standard.

Items highlighted were analyzed by nitrogen, nitrate & nitrite and the result is reported for both.

8015D analysis added to plan in 2015 per NMED Comment 7(b), Approval with Modification, FWGWMWP - 2012 Updates; 2013 Updates; 2014 Updates for 2015.

1) Did not sample BW-4B in the 4th Qtr 2019 - not enough water for sampling. Recharge slow.

8.1.2 BW-1C, BW-2A, BW-2B, BW-2C, BW-3B, BW-3C, BW-5A, BW-5B, BW-5C
Total Metals Analytical Result Summary

STANDARDS			PARAMETERS											
			Arsenic (mg/L)	Barium (mg/L)	Cadmium (mg/L)	Chromium (mg/L)	Copper (mg/L)	Iron (mg/L)	Lead (mg/L)	Manganese (mg/L)	Selenium (mg/L)	Mercury (ug/L)	Uranium (mg/L)	Zinc (mg/L)
WQCC 20 NMAC 6.2.3103 (DEC 2018)			**0.01**	**2.0**	**0.005**	**0.05**	**1.0**	**1.0**	**0.015**	**0.2**	**0.05**	**2**	**0.03**	**10.0**
40 CFR 141.62 MCL			0.01	2.0	0.005	0.1	1.3	NE	0.015	NE	0.05	2	0.03	NE
NMED TAP WATER (Rev 2. JUN 2019)			0.000855	3.28	0.00624	0.0057	0.79	13.8	NE	2.02	0.0987	0.626	0.0592	5.96
EPA RSL for Tap Water (NOV 2019)			0.00052	3.80	0.0092	22	0.8	14	0.015	0.43	0.1	0.63	0.004	6
WELL ID	**DATE SAMPLED**	**METHOD**												
BW-1A	08/14/19		Dry											
BW-1B	08/14/19		Dry											
BW-1C	08/15/19	200.7/200.8	<0.001	0.019	<0.002	0.0026	<0.006	0.054	<0.0005	0.01	<0.001	<0.2	0.0094	<0.01
	09/12/18	200.7/200.8	<0.001	0.037	<0.002	0.0041	<0.006	0.29	0.00077	0.038	<0.001	<0.2	0.0081	<0.01
	09/13/17	200.7/200.8	0.00038	0.02	<0.002	0.0045	0.0027	0.13	<0.0005	0.015	<0.001	<0.2	0.0099	<0.01
	09/08/16	200.7/200.8	0.00044	0.022	<0.002	0.0036	<0.006	0.089	<0.0005	0.014	0.00055	0.11	0.008	<0.01
	08/12/15	200.7/200.8	<0.001	0.044	<0.002	0.0073	<0.006	0.36	0.00051	0.049	<0.001	<0.2	0.01	<0.01
	09/10/14	200.7/200.8	<0.001	0.026	<0.002	<0.006	<0.006	0.43	<0.001	0.028	<0.001	<0.2	0.0099	<0.01
	09/09/13	200.7/200.8	<0.001	0.027	<0.002	0.018	<0.006	0.4	<0.001	0.025	<0.001	<0.2	0.006	<0.01
	08/24/12	200.7/200.8	<0.0025	0.028	<0.002	**0.22**	0.0062	0.49	<0.005	0.068	<0.0025	<0.2	0.0052	0.011
	10/28/11	200.7/200.8	<0.0025	0.018	<0.002	0.031	<0.006	0.1	<0.005	0.0077	<0.0025	<0.2	0.0043	<0.01
	07/20/10	6010B	*<0.02**	<0.02	<0.002	<0.006	<0.006	<0.05	<0.005	0.0083	*<0.05**	<0.2	0.003	<0.02
BW-2A	08/14/19	200.7/200.8	0.0085	0.15	<0.002	0.0036	0.0033	0.49	0.00012	0.15	<0.001	<0.2	<0.0005	<0.01
	09/12/18	200.7/200.8	0.0078	0.13	<0.002	0.0036	0.0033	0.43	<0.0005	0.14	<0.001	<0.2	<0.0005	<0.01
	09/13/17	200.7/200.8	0.0075	0.16	<0.002	0.0036	0.0033	**1.2**	0.00068	0.17	0.0019	<0.2	<0.0005	<0.01
	09/08/16	200.7/200.8	0.0072	0.15	<0.002	<0.006	<0.006	0.4	<0.0005	0.14	0.0014	0.053	<0.0005	<0.01
	08/12/15	200.7/200.8	0.0073	0.16	<0.002	<0.006	<0.006	0.5	<0.0005	0.14	<0.001	<0.2	<0.0005	<0.01
	09/09/14	200.7/200.8	0.0085	0.13	<0.002	<0.006	<0.006	0.34	<0.001	0.12	0.0023	<0.2	<0.001	<0.01
	09/09/13	200.7/200.8	0.0076	0.15	<0.002	<0.006	<0.006	0.47	<0.001	0.14	<0.001	<0.2	<0.001	<0.01
	08/24/12	200.7/200.8	0.0072	0.15	<0.002	<0.006	<0.006	0.49	<0.005	0.16	<0.0025	<0.2	<0.0025	<0.01
	10/28/11	200.7/200.8	0.0072	0.16	<0.002	<0.006	<0.006	0.87	<0.005	0.19	<0.0025	<0.2	<0.0025	<0.01
	07/20/10	6010B	*<0.02**	0.13	<0.002	<0.006	<0.006	0.36	<0.005	0.12	*<0.05**	<0.2	<0.001	<0.02

8.1.2 BW-1C, BW-2A, BW-2B, BW-2C, BW-3B, BW-3C, BW-5A, BW-5B, BW-5C

Total Metals Analytical Result Summary

STANDARDS			PARAMETERS											
			Arsenic (mg/L)	Barium (mg/L)	Cadmium (mg/L)	Chromium (mg/L)	Copper (mg/L)	Iron (mg/L)	Lead (mg/L)	Manganese (mg/L)	Selenium (mg/L)	Mercury (ug/L)	Uranium (mg/L)	Zinc (mg/L)
WQCC 20 NMAC 6.2.3103 (DEC 2018)			**0.01**	**2.0**	**0.005**	**0.05**	**1.0**	**1.0**	**0.015**	**0.2**	**0.05**	**2**	**0.03**	**10.0**
40 CFR 141.62 MCL			0.01	2.0	0.005	0.1	1.3	NE	0.015	NE	0.05	2	0.03	NE
NMED TAP WATER (Rev 2. JUN 2019)			0.000855	3.28	0.00624	0.0057	0.79	13.8	NE	2.02	0.0987	0.626	0.0592	5.96
EPA RSL for Tap Water (NOV 2019)			0.00052	3.80	0.0092	22	0.8	14	0.015	0.43	0.1	0.63	0.004	6
WELL ID	**DATE SAMPLED**	**METHOD**												
BW-2B	08/14/19	200.7/200.8	0.00098	0.057	<0.002	0.0027	<0.006	**1.6**	0.00092	0.18	<0.001	<0.2	0.012	0.011
	09/12/18	200.7/200.8	0.00077	0.037	<0.002	0.0078	0.0042	0.24	<0.0005	0.15	<0.001	<0.2	0.01	<0.01
	09/13/17	200.7/200.8	0.0021	0.087	<0.002	0.0078	0.0042	**3.2**	0.002	**0.22**	0.0029	<0.2	0.014	0.007
	09/08/16	200.7/200.8	0.0015	0.049	<0.002	<0.006	<0.006	0.65	0.00039	0.15	0.0036	<0.2	0.012	0.012
	08/12/15	200.7/200.8	0.0013	0.1	<0.002	<0.006	<0.006	**2.5**	0.0012	**0.21**	0.0019	<0.2	0.013	0.012
	09/09/14	200.7/200.8	0.0022	0.04	<0.002	<0.006	<0.006	0.21	<0.001	0.14	0.0048	<0.2	0.015	<0.01
	09/09/13	200.7/200.8	0.0011	0.052	<0.002	<0.006	<0.006	0.38	<0.001	0.16	0.0013	<0.2	0.014	<0.01
	08/24/12	200.7/200.8	<0.0025	0.044	<0.002	<0.006	<0.006	0.12	<0.005	0.16	<0.0025	<0.2	0.013	<0.01
	10/28/11	200.7/200.8	<0.0025	0.056	<0.002	<0.006	<0.006	0.57	<0.005	**0.26**	<0.0025	<0.2	0.015	<0.01
	07/20/10	6010B	*<0.02**	0.047	<0.002	<0.006	<0.006	0.16	<0.005	**0.22**	*<0.05**	<0.2	0.012	<0.02
BW-2C	08/14/19	200.7/200.8	0.0023	0.086	<0.002	0.018	<0.006	**3.9**	0.0044	0.096	0.00077	<0.2	0.0072	0.024
	09/18/18	200.7/200.8	<0.005	0.05	<0.002	0.006	<0.006	**2**	0.0024	0.059	<0.005	0.045	0.0055	0.015
	09/13/17	200.7/200.8	0.00076	0.025	<0.002	0.009	0.0035	0.41	0.0005	0.039	0.00092	<0.2	0.0047	0.0051
	09/08/16	200.7/200.8	0.00057	0.02	<0.002	<0.006	<0.006	0.2	0.00017	0.013	0.00025	0.058	0.0047	<0.01
	08/12/15	200.7/200.8	<0.001	0.024	<0.002	<0.006	<0.006	0.51	<0.0005	0.014	<0.001	<0.2	0.0056	<0.01
	09/10/14	200.7/200.8	0.0011	0.055	<0.002	0.01	<0.006	**2.5**	0.0017	0.067	<0.001	<0.2	0.0056	0.014
	09/09/13	200.7/200.8	<0.001	0.027	<0.002	<0.006	<0.006	0.39	<0.001	0.025	<0.001	<0.2	0.0056	<0.01
	08/24/12	200.7/200.8	<0.0025	0.086	**0.013**	0.013	<0.006	**2.9**	<0.005	0.12	<0.0025	<0.2	0.0047	0.025
	10/28/11	200.7/200.8	<0.0025	0.021	<0.002	0.0085	<0.006	0.28	<0.005	0.023	<0.0025	<0.2	0.0043	<0.01
	07/20/10	6010B	*<0.02**	0.024	<0.002	0.017	<0.006	0.74	<0.005	0.033	*<0.05**	<0.2	0.006	<0.02
BW-3A	08/14/19		Dry											

8.1.2 BW-1C, BW-2A, BW-2B, BW-2C, BW-3B, BW-3C, BW-5A, BW-5B, BW-5C

Total Metals Analytical Result Summary

			PARAMETERS											
STANDARDS			Arsenic (mg/L)	Barium (mg/L)	Cadmium (mg/L)	Chromium (mg/L)	Copper (mg/L)	Iron (mg/L)	Lead (mg/L)	Manganese (mg/L)	Selenium (mg/L)	Mercury (ug/L)	Uranium (mg/L)	Zinc (mg/L)
WQCC 20 NMAC 6.2.3103 (DEC 2018)			**0.01**	**2.0**	**0.005**	**0.05**	**1.0**	**1.0**	**0.015**	**0.2**	**0.05**	**2**	**0.03**	**10.0**
40 CFR 141.62 MCL			0.01	2.0	0.005	0.1	1.3	NE	0.015	NE	0.05	2	0.03	NE
NMED TAP WATER (Rev 2. JUN 2019)			0.000855	3.28	0.00624	0.0057	0.79	13.8	NE	2.02	0.0987	0.626	0.0592	5.96
EPA RSL for Tap Water (NOV 2019)			0.00052	3.80	0.0092	22	0.8	14	0.015	0.43	0.1	0.63	0.004	6
WELL ID	**DATE SAMPLED**	**METHOD**												
BW-3B	08/14/19	200.7/200.8	0.0059	0.11	<0.002	0.0024	<0.006	0.43	<0.0005	0.11	<0.001	<0.2	0.00011	<0.01
	09/12/18	200.7/200.8	0.0049	0.11	<0.002	0.0024	<0.006	0.87	0.00035	0.12	<0.001	<0.2	0.00016	<0.01
	09/13/17	200.7/200.8	0.0052	0.12	<0.002	0.0018	0.0027	**1.1**	0.00075	0.12	0.0016	<0.2	0.0002	0.004
	09/08/16	200.7/200.8	0.0055	0.099	<0.002	<0.006	<0.006	0.34	0.0001	0.078	0.0017	<0.2	<0.0005	<0.01
	08/12/15	200.7/200.8	0.0048	0.11	<0.002	<0.006	<0.006	0.51	<0.0005	0.11	<0.001	<0.2	<0.0005	<0.01
	09/10/14	200.7/200.8	0.0047	0.074	<0.002	<0.006	<0.006	0.32	<0.001	0.081	0.0022	<0.2	<0.001	<0.01
	09/09/13	200.7/200.8	0.0047	0.1	<0.002	<0.006	<0.006	0.51	<0.001	0.1	<0.001	<0.2	<0.001	<0.01
	08/23/12	200.7/200.8	0.0044	0.22	<0.002	0.01	<0.006	**3.6**	<0.005	**0.22**	<0.0025	<0.2	<0.0025	0.014
	10/28/11	200.7/200.8	0.0049	0.093	<0.002	0.0075	<0.006	0.82	<0.005	0.086	<0.0025	<0.2	<0.0025	<0.01
	07/20/10	6010B	*<0.02**	0.079	<0.002	<0.006	<0.006	0.45	<0.005	0.074	*<0.05**	<0.2	<0.001	<0.02
BW-3C	08/14/19	200.7/200.8	0.0014	0.08	<0.002	0.016	0.0041	**1.7**	0.0014	0.056	<0.001	0.045	0.0015	0.013
	09/18/18	200.7/200.8	0.0022	0.24	<0.002	0.027	0.0045	**3.9**	0.003	0.16	<0.005	0.045	0.0017	0.017
	09/13/17	200.7/200.8	0.0016	0.032	<0.002	0.015	0.0045	0.62	0.0004	0.025	<0.005	<0.2	0.0016	0.012
	09/08/16	200.7/200.8	0.0013	0.033	<0.002	<0.006	<0.006	0.34	0.00034	0.021	0.00051	0.058	0.0014	0.0056
	08/12/15	200.7/200.8	<0.001	0.039	<0.002	<0.006	<0.006	0.81	0.00051	0.028	<0.001	<0.2	0.0018	0.015
	09/10/14	200.7/200.8	0.0021	0.11	<0.002	0.013	<0.006	**2.7**	0.0015	0.073	<0.001	<0.2	0.0017	0.016
	09/09/13	200.7/200.8	0.0021	0.073	<0.002	<0.006	<0.006	**1.5**	<0.001	0.051	<0.001	<0.2	0.002	0.01
	08/23/12	200.7/200.8	<0.0025	0.043	<0.002	<0.006	<0.006	0.34	<0.005	0.022	<0.0025	<0.2	<0.0025	0.012
	10/28/11	200.7/200.8	<0.0025	0.036	<0.002	0.007	<0.006	0.16	<0.005	0.018	<0.0025	<0.2	<0.0025	<0.01
	07/20/10	6010B	*<0.02**	0.042	<0.002	0.0068	<0.006	0.83	<0.005	0.021	*<0.05**	<0.2	<0.001	<0.02
BW-4A	03/27/19								Dry					
	05/21/19								Dry					
	08/23/19								Dry					
	10/16/19								Dry					

8.1.2 BW-1C, BW-2A, BW-2B, BW-2C, BW-3B, BW-3C, BW-5A, BW-5B, BW-5C

Total Metals Analytical Result Summary

STANDARDS			PARAMETERS											
			Arsenic (mg/L)	Barium (mg/L)	Cadmium (mg/L)	Chromium (mg/L)	Copper (mg/L)	Iron (mg/L)	Lead (mg/L)	Manganese (mg/L)	Selenium (mg/L)	Mercury (ug/L)	Uranium (mg/L)	Zinc (mg/L)
WQCC 20 NMAC 6.2.3103 (DEC 2018)			**0.01**	**2.0**	**0.005**	**0.05**	**1.0**	**1.0**	**0.015**	**0.2**	**0.05**	**2**	**0.03**	**10.0**
40 CFR 141.62 MCL			0.01	2.0	0.005	0.1	1.3	NE	0.015	NE	0.05	2	0.03	NE
NMED TAP WATER (Rev 2. JUN 2019)			0.000855	3.28	0.00624	0.0057	0.79	13.8	NE	2.02	0.0987	0.626	0.0592	5.96
EPA RSL for Tap Water (NOV 2019)			0.00052	3.80	0.0092	22	0.8	14	0.015	0.43	0.1	0.63	0.004	6
WELL ID	DATE SAMPLED	METHOD												
BW-4B [1]	08/23/19	200.7/200.8	**0.01**	0.14	<0.002	0.021	0.0091	**4.8**	0.0028	0.092	<0.001	0.1	**0.07**	0.016
	05/22/19	200.7/200.8	**0.017**	1.3	<0.002	**0.09**	0.036	**30**	**0.033**	**1.1**	0.014	<0.2	**0.071**	0.086
	03/27/19	200.7/200.8	**0.012**	0.16	<0.002	0.021	0.0091	**5.7**	0.0035	0.13	0.00091	0.14	**0.059**	0.018
	11/13/18	200.7/200.8	**0.013**	0.28	<0.002	0.038	0.017	**10**	0.0069	**0.21**	<0.001	NA	**0.051**	0.038
BW-5A	03/27/19								Dry					
	05/21/19								Dry					
	08/23/19								Dry					
	10/16/19								Dry					
BW-5B	10/16/19	200.7/200.8	0.0021	0.14	<0.002	0.0028	<0.006	0.12	<0.0005	0.0037	0.0019	<0.2	0.032	<0.01
	08/15/19	200.7/200.8	0.0015	0.18	<0.002	0.0027	<0.006	**1.3**	0.00051	0.028	0.0014	0.12	0.029	0.006
	05/22/19	200.7/200.8	0.0012	0.16	<0.002	<0.006	<0.006	0.55	0.0003	0.022	0.0017	<0.2	0.029	<0.01
	03/27/19	200.7/200.8	0.0027	0.092	<0.002	0.0019	<0.006	0.11	0.000071	0.0036	0.0017	0.13	**0.039**	<0.01
	11/13/18	200.7/200.8	0.0017	0.14	<0.002	0.0034	<0.006	0.7	0.00036	0.023	0.0017	NA	0.027	0.0037
	09/10/18	200.7/200.8	0.0014	0.12	<0.002	0.0033	<0.006	**1.7**	0.00052	0.034	0.0014	0.087	**0.031**	0.005
	05/14/18	200.7/200.8	0.0022	0.13	<0.002	0.0072	<0.006	**2.4**	0.00077	0.051	0.0021	0.048	**0.036**	0.0088
	02/26/18	200.7/200.8	0.0027	0.11	<0.002	0.0047	<0.006	**1.8**	<0.0025	0.044	<0.005	0.053	**0.037**	0.01
	12/08/17	200.7/200.8	0.003	0.085	<0.002	0.012	<0.006	**1.7**	0.00097	0.042	<0.005	0.15	**0.042**	0.0086

8.1.2 BW-1C, BW-2A, BW-2B, BW-2C, BW-3B, BW-3C, BW-5A, BW-5B, BW-5C

Total Metals Analytical Result Summary

			PARAMETERS											
STANDARDS			Arsenic (mg/L)	Barium (mg/L)	Cadmium (mg/L)	Chromium (mg/L)	Copper (mg/L)	Iron (mg/L)	Lead (mg/L)	Manganese (mg/L)	Selenium (mg/L)	Mercury (ug/L)	Uranium (mg/L)	Zinc (mg/L)
WQCC 20 NMAC 6.2.3103 (DEC 2018)			**0.01**	**2.0**	**0.005**	**0.05**	**1.0**	**1.0**	**0.015**	**0.2**	**0.05**	**2**	**0.03**	**10.0**
40 CFR 141.62 MCL			0.01	2.0	0.005	0.1	1.3	NE	0.015	NE	0.05	2	0.03	NE
NMED TAP WATER (Rev 2. JUN 2019)			0.000855	3.28	0.00624	0.0057	0.79	13.8	NE	2.02	0.0987	0.626	0.0592	5.96
EPA RSL for Tap Water (NOV 2019)			0.00052	3.80	0.0092	22	0.8	14	0.015	0.43	0.1	0.63	0.004	6
WELL ID	DATE SAMPLED	METHOD												
BW-5C	10/16/19	200.7/200.8	<0.0005	0.13	<0.002	<0.006	<0.006	0.99	0.00038	0.04	<0.005	0.066	**0.04**	<0.01
	08/15/19	200.7/200.8	0.00046	0.088	<0.002	0.0046	<0.006	0.53	0.000068	0.024	0.00091	0.1	**0.043**	<0.01
	05/21/19	200.7/200.8	0.00058	0.12	<0.002	0.0017	<0.006	**1.1**	0.0009	0.046	0.0013	<0.2	**0.043**	<0.01
	03/27/19	200.7/200.8	0.00038	0.12	<0.002	0.0016	<0.006	**1.7**	0.00061	0.047	0.00085	0.26	**0.044**	<0.01
	11/13/18	200.7/200.8	0.0014	0.19	<0.002	0.008	<0.006	**3.4**	0.0027	0.093	0.001	0.081	**0.042**	0.009
	09/10/18	200.7/200.8	<0.005	0.094	<0.002	<0.006	<0.006	0.87	<0.0025	0.037	<0.005	0.19	**0.041**	<0.01
	05/14/18	200.7/200.8	<0.005	0.13	<0.0021	0.0034	<0.006	**1.5**	<0.0025	0.048	<0.005	0.16	**0.043**	0.0072
	02/26/18	200.7/200.8	0.00094	0.11	<0.002	<0.006	<0.006	0.4	<0.0005	0.038	0.0027	0.12	**0.042**	<0.01
	12/08/17	200.7/200.8	0.0022	0.12	<0.002	<0.006	<0.006	0.54	<0.0025	0.058	<0.005	0.081	**0.038**	<0.01

DEFINITIONS

NA = Not analyzed; NE = Not established

Bold and highlighted values represent values above the applicable standards

STANDARDS

WQCC 20 NMAC 6.2.3103 - Standards for Ground Water of 10,000 mg/l TDS Concentration or Less.

a) Human Health Standards; b) Other Standards for Domestic Water

40 CFR 141.62 Maximum Contaminant Levels for Inorganic Contaminants

NMED Risk Assessment Guidance for Investigations and Remediations Table A-1

EPA Regional Screening Level (RSL) Summary Table

NOTES

Wells marked in red were not sampled because the well was dry

Items notes with a * and italics have a detection limit greater than or equal to the applicable standard.

1) Did not sample BW-4B in the 4th Qtr 2019 - not enough water for sampling. Recharge slow.

8.1.3 BW-1C, BW-2A, BW-2B, BW-2C, BW-3B, BW-3C, BW-5A, BW-5B, BW-5C
Dissolved Metals Analytical Result Summary

			PARAMETERS										
STANDARDS			Arsenic (mg/L)	Barium (mg/L)	Cadmium (mg/L)	Chromium (mg/L)	Copper (mg/L)	Iron (mg/L)	Lead (mg/L)	Manganese (mg/L)	Selenium (mg/L)	Uranium (mg/L)	Zinc (mg/L)
WQCC 20 NMAC 6.2.3103 (DEC 2018)			**0.01**	**2.0**	**0.005**	**0.05**	**1.0**	**1.0**	**0.015**	**0.2**	**0.05**	**0.03**	**10.0**
40 CFR 141.62 MCL			0.01	2.0	0.005	0.1	1.3	NE	0.015	NE	0.05	0.03	NE
NMED TAP WATER (Rev 2. JUN 2019)			0.000855	3.28	0.00624	0.0057	0.7898	13.8	NE	2.02	0.0987	0.0592	5.96
EPA RSL for Tap Water (NOV 2019)			0.000052	3.80	0.0092	22	0.8	14	0.015	0.43	0.1	0.004	6
WELL ID	**DATE SAMPLED**	**METHOD**											
BW-1A	08/14/19		Dry										
BW-1B	08/14/19		Dry										
BW-1C	08/15/19	200.7/200.8	0.00015	0.017	<0.002	<0.006	<0.006	0.022	<0.0005	0.0093	<0.001	0.0078	0.011
	09/12/18	200.7/200.8	<0.001	0.017	<0.002	0.0013	<0.006	0.024	<0.0005	0.0093	<0.001	0.0081	0.0058
	09/13/17	200.7/200.8	0.00053	0.017	<0.002	0.0014	<0.006	0.031	<0.0005	0.0088	<0.005	0.0092	0.01
	09/08/16	200.7/200.8	0.00032	0.017	<0.002	<0.006	<0.006	0.029	<0.0005	0.0077	0.00063	0.0089	<0.01
	08/12/15	200.7/200.8	<0.005	0.018	<0.002	<0.006	<0.006	0.04	<0.0025	0.011	<0.005	0.0087	<0.01
	09/09/14	200.7/200.8	<0.001	0.02	<0.002	<0.006	<0.006	<0.02	<0.005	0.011	<0.001	0.0089	<0.01
	09/09/13	200.7/200.8	<0.001	0.017	<0.002	<0.006	<0.006	<0.02	<0.001	<0.002	<0.001	0.0057	<0.01
	08/24/12	200.7/200.8	<0.001	0.016	<0.002	<0.006	<0.006	<0.02	<0.005	0.0029	<0.001	0.005	<0.01
	10/28/11	200.7/200.8	<0.001	0.016	<0.002	<0.006	<0.006	<0.02	<0.005	<0.002	<0.001	0.0043	0.026
	07/20/10	6010B	*<0.02**	<0.02	<0.002	<0.006	<0.006	<0.02	<0.005	0.0094	*<0.05**	0.003	<0.05
BW-2A	08/14/19	200.7/200.8	0.0083	0.14	<0.002	<0.006	<0.006	0.32	<0.0005	0.13	<0.001	0.000079	0.0094
	09/12/18	200.7/200.8	0.0076	0.15	<0.002	<0.006	<0.006	0.38	<0.0005	0.14	<0.001	<0.0005	0.008
	09/13/17	200.7/200.8	0.0079	0.13	<0.002	<0.006	<0.006	0.11	<0.0005	0.13	0.0031	<0.0005	0.0088
	09/08/16	200.7/200.8	0.0079	0.15	<0.002	<0.006	<0.006	0.37	<0.0005	0.14	0.0020	0.000076	<0.01
	08/12/15	200.7/200.8	0.0079	0.15	<0.002	<0.006	<0.006	0.37	<0.0025	0.14	<0.005	<0.0025	0.016
	09/09/14	200.7/200.8	0.0083	0.16	<0.002	<0.006	<0.006	0.38	<0.005	0.13	0.0027	<0.005	<0.01
	09/09/13	200.7/200.8	0.0081	0.15	<0.002	<0.006	<0.006	0.39	<0.001	0.15	0.0015	<0.001	<0.01
	08/24/12	200.7/200.8	0.0072	0.14	<0.002	<0.006	<0.006	0.26	<0.005	0.13	0.001	<0.001	<0.01
	10/28/11	200.7/200.8	0.0065	0.13	<0.002	<0.006	<0.006	0.28	<0.005	0.12	<0.001	<0.001	0.021
	07/20/10	6010B	*<0.02**	0.14	<0.002	<0.006	<0.006	0.29	<0.005	0.14	*<0.05**	<0.001	<0.05

8.1.3 BW-1C, BW-2A, BW-2B, BW-2C, BW-3B, BW-3C, BW-5A, BW-5B, BW-5C
Dissolved Metals Analytical Result Summary

			PARAMETERS										
STANDARDS			Arsenic (mg/L)	Barium (mg/L)	Cadmium (mg/L)	Chromium (mg/L)	Copper (mg/L)	Iron (mg/L)	Lead (mg/L)	Manganese (mg/L)	Selenium (mg/L)	Uranium (mg/L)	Zinc (mg/L)
WQCC 20 NMAC 6.2.3103 (DEC 2018)			**0.01**	**2.0**	**0.005**	**0.05**	**1.0**	**1.0**	**0.015**	**0.2**	**0.05**	**0.03**	**10.0**
40 CFR 141.62 MCL			0.01	2.0	0.005	0.1	1.3	NE	0.015	NE	0.05	0.03	NE
NMED TAP WATER (Rev 2. JUN 2019)			0.000855	3.28	0.00624	0.0057	0.7898	13.8	NE	2.02	0.0987	0.0592	5.96
EPA RSL for Tap Water (NOV 2019)			0.000052	3.80	0.0092	22	0.8	14	0.015	0.43	0.1	0.004	6
WELL ID	**DATE SAMPLED**	**METHOD**											
BW-2B	08/14/19	200.7/200.8	0.00074	0.039	<0.002	<0.006	<0.006	0.13	<0.0005	0.15	<0.001	0.01	0.008
	09/12/18	200.7/200.8	0.00073	0.041	<0.002	<0.006	<0.006	0.16	<0.0005	0.15	<0.001	0.011	0.0063
	09/13/17	200.7/200.8	0.0022	0.042	<0.002	<0.006	<0.006	0.21	<0.0005	0.16	0.0055	0.014	<0.01
	09/08/16	200.7/200.8	0.0017	0.04	<0.002	<0.006	<0.006	0.1	<0.0005	0.15	0.0039	0.013	<0.01
	08/12/15	200.7/200.8	<0.005	0.05	<0.002	<0.006	<0.006	0.6	0.0029	0.16	<0.005	0.012	<0.01
	09/09/14	200.7/200.8	0.0022	0.042	<0.002	<0.006	<0.006	0.096	<0.001	0.14	0.0047	0.014	<0.01
	09/09/13	200.7/200.8	0.0016	0.044	<0.002	<0.006	<0.006	0.078	<0.005	0.16	0.0035	0.014	<0.01
	08/24/12	200.7/200.8	0.0011	0.043	<0.002	<0.006	<0.006	0.064	<0.005	0.16	0.0019	0.014	0.03
	10/28/11	200.7/200.8	<0.001	0.051	<0.002	<0.006	<0.006	0.26	<0.005	**0.25**	0.0013	0.016	0.026
	07/20/10	6010B	*<0.02**	0.047	<0.002	<0.006	<0.006	0.14	<0.005	**0.22**	**1.2**	0.012	<0.05
BW-2C	08/14/19	200.7/200.8	0.00087	0.019	<0.002	0.0031	<0.006	0.16	0.00019	0.012	<0.001	0.0054	0.0098
	09/18/18	200.7/200.8	0.00077	0.018	<0.002	<0.006	<0.006	0.17	<0.0005	0.012	<0.001	0.0059	0.005
	09/13/17	200.7/200.8	0.00079	0.014	<0.002	0.0014	<0.006	<0.02	<0.0005	0.0015	<0.005	0.0046	0.087
	09/08/16	200.7/200.8	0.00067	0.016	<0.002	<0.006	<0.006	<0.02	<0.0005	0.0039	0.0007	0.0050	<0.01
	08/12/15	200.7/200.8	<0.005	0.018	<0.002	<0.006	<0.006	<0.02	<0.0025	<0.002	<0.005	0.0054	<0.01
	09/10/14	200.7/200.8	<0.001	0.031	<0.002	<0.006	<0.006	0.81	<0.005	0.026	<0.001	0.0051	<0.01
	09/09/13	200.7/200.8	<0.001	0.018	<0.002	<0.006	<0.006	<0.02	<0.001	0.0025	<0.001	0.0053	<0.01
	08/24/12	200.7/200.8	<0.001	0.086	**0.0056**	<0.006	<0.006	**3.0**	<0.005	0.049	<0.001	0.0048	0.014
	10/28/11	200.7/200.8	<0.001	0.015	<0.002	<0.006	<0.006	<0.02	<0.005	<0.002	<0.001	0.0044	0.015
	07/20/10	6010B	*<0.02**	<0.02	<0.002	<0.006	<0.006	0.028	<0.005	0.0045	*<0.05**	0.006	<0.05
BW-3A	08/14/19		Dry										

8.1.3 BW-1C, BW-2A, BW-2B, BW-2C, BW-3B, BW-3C, BW-5A, BW-5B, BW-5C
Dissolved Metals Analytical Result Summary

			PARAMETERS										
STANDARDS			Arsenic (mg/L)	Barium (mg/L)	Cadmium (mg/L)	Chromium (mg/L)	Copper (mg/L)	Iron (mg/L)	Lead (mg/L)	Manganese (mg/L)	Selenium (mg/L)	Uranium (mg/L)	Zinc (mg/L)
WQCC 20 NMAC 6.2.3103 (DEC 2018)			**0.01**	**2.0**	**0.005**	**0.05**	**1.0**	**1.0**	**0.015**	**0.2**	**0.05**	**0.03**	**10.0**
40 CFR 141.62 MCL			0.01	2.0	0.005	0.1	1.3	NE	0.015	NE	0.05	0.03	NE
NMED TAP WATER (Rev 2. JUN 2019)			0.000855	3.28	0.00624	0.0057	0.7898	13.8	NE	2.02	0.0987	0.0592	5.96
EPA RSL for Tap Water (NOV 2019)			0.000052	3.80	0.0092	22	0.8	14	0.015	0.43	0.1	0.004	6
WELL ID	**DATE SAMPLED**	**METHOD**											
BW-3B	08/14/19	200.7/200.8	0.0059	0.1	<0.002	<0.006	<0.006	0.35	<0.0005	0.1	<0.001	0.00011	0.0051
	09/12/18	200.7/200.8	0.0047	0.11	<0.002	<0.006	<0.006	0.41	<0.0005	0.11	<0.001	0.00019	0.0076
	09/13/17	200.7/200.8	0.0052	0.083	<0.002	0.0016	<0.006	0.098	<0.0005	0.075	0.0027	0.00016	<0.01
	09/08/16	200.7/200.8	0.0059	0.1	<0.002	<0.006	<0.006	0.41	<0.0025	0.11	0.0024	0.00013	<0.01
	08/12/15	200.7/200.8	0.0053	0.1	<0.002	<0.006	<0.006	0.4	<0.0025	0.11	<0.005	<0.0025	<0.01
	09/10/14	200.7/200.8	0.0061	0.11	<0.002	<0.006	<0.006	0.42	<0.005	0.1	0.0027	<0.005	0.015
	09/09/13	200.7/200.8	0.0052	0.1	<0.002	<0.006	<0.006	0.44	<0.005	0.12	0.002	<0.005	<0.01
	08/23/12	200.7/200.8	0.0049	0.091	<0.002	<0.006	<0.006	0.11	<0.005	0.11	0.001	<0.001	<0.01
	10/28/11	200.7/200.8	0.0049	0.11	<0.002	<0.006	<0.006	0.97	<0.005	0.12	<0.001	<0.001	0.035
	07/20/10	6010B	*<0.02**	0.076	<0.002	<0.006	<0.006	0.21	<0.005	0.083	*<0.05**	<0.001	0.054
BW-3C	08/14/19	200.7/200.8	0.001	0.029	<0.002	0.0024	<0.006	0.12	6.1E-05	0.017	<0.001	0.0012	0.0078
	09/18/18	200.7/200.8	0.001	0.035	<0.002	<0.006	<0.006	0.15	<0.0005	0.021	<0.001	0.0011	0.0072
	09/13/17	200.7/200.8	0.0013	0.023	<0.002	0.0027	<0.006	0.044	<0.0005	0.013	<0.005	0.0016	0.014
	09/08/16	200.7/200.8	0.0013	0.027	<0.002	<0.006	<0.006	0.029	<0.0005	0.014	0.00076	0.0015	<0.01
	08/12/15	200.7/200.8	<0.005	0.031	<0.002	<0.006	<0.006	0.13	<0.0025	0.019	<0.005	<0.0025	<0.01
	09/10/14	200.7/200.8	0.0019	0.046	<0.002	<0.006	<0.006	0.73	<0.005	0.024	<0.001	<0.005	<0.01
	09/09/13	200.7/200.8	0.002	0.039	<0.002	<0.006	<0.006	0.46	<0.005	0.022	<0.001	<0.005	<0.01
	08/23/12	200.7/200.8	0.0022	0.035	<0.002	<0.006	<0.006	0.031	<0.005	0.017	<0.001	0.0014	0.012
	10/28/11	200.7/200.8	0.0017	0.034	<0.002	<0.006	<0.006	<0.02	<0.005	0.014	<0.001	0.0013	0.066
	07/20/10	6010B	*<0.02**	0.035	<0.002	<0.006	<0.006	0.073	<0.005	0.013	*<0.05**	0.001	<0.05
BW-4A	03/27/19							Dry					
	05/21/19							Dry					
	08/23/19							Dry					
	10/16/19							Dry					

8.1.3 BW-1C, BW-2A, BW-2B, BW-2C, BW-3B, BW-3C, BW-5A, BW-5B, BW-5C
Dissolved Metals Analytical Result Summary

STANDARDS			PARAMETERS										
			Arsenic (mg/L)	Barium (mg/L)	Cadmium (mg/L)	Chromium (mg/L)	Copper (mg/L)	Iron (mg/L)	Lead (mg/L)	Manganese (mg/L)	Selenium (mg/L)	Uranium (mg/L)	Zinc (mg/L)
WQCC 20 NMAC 6.2.3103 (DEC 2018)			**0.01**	**2.0**	**0.005**	**0.05**	**1.0**	**1.0**	**0.015**	**0.2**	**0.05**	**0.03**	**10.0**
40 CFR 141.62 MCL			0.01	2.0	0.005	0.1	1.3	NE	0.015	NE	0.05	0.03	NE
NMED TAP WATER (Rev 2. JUN 2019)			0.000855	3.28	0.00624	0.0057	0.7898	13.8	NE	2.02	0.0987	0.0592	5.96
EPA RSL for Tap Water (NOV 2019)			0.000052	3.80	0.0092	22	0.8	14	0.015	0.43	0.1	0.004	6
WELL ID	**DATE SAMPLED**	**METHOD**											
BW-4B [1]	08/23/19	200.7/200.8	0.0093	0.082	<0.002	0.0096	0.0045	0.76	0.00069	0.055	0.00043	**0.071**	0.0076
	05/22/19	200.7/200.8	**0.011**	0.063	<0.002	<0.006	<0.006	0.28	0.00045	0.044	0.00068	**0.056**	0.031
	03/27/19	200.7/200.8	**0.011**	0.096	<0.002	0.012	0.007	0.0097	0.00097	0.0016	0.00019	**0.057**	0.028
	11/13/18	200.7/200.8	**0.011**	0.14	<0.002	0.012	0.007	**2.1**	0.0027	0.11	<0.001	**0.054**	0.028
BW-5A	03/27/19							Dry					
	05/21/19							Dry					
	08/23/19							Dry					
	10/16/19							Dry					
BW-5B	10/16/19	200.7/200.8	0.0023	0.14	<0.002	0.0029	<0.006	<0.02	<0.0005	0.0012	0.0019	**0.035**	0.013
	08/15/19	200.7/200.8	0.0013	0.16	<0.002	<0.006	0.0028	0.012	<0.0025	0.012	0.0018	0.029	0.0052
	05/22/19	200.7/200.8	0.0012	0.15	<0.002	<0.006	<0.006	<0.02	<0.0005	0.011	0.0015	0.028	0.068
	03/27/19	200.7/200.8	0.0028	0.099	<0.002	<0.006	<0.006	0.021	<0.0005	0.0018	0.0022	**0.035**	0.034
	11/13/18	200.7/200.8	0.0014	0.11	<0.002	<0.006	<0.006	<0.02	<0.0005	0.0088	0.0012	**0.031**	0.021
	09/10/18	200.7/200.8	0.0014	0.099	<0.002	<0.006	<0.006	0.053	<0.0005	0.0094	0.0014	0.029	0.015
	05/14/18	200.7/200.8	0.0031	0.089	<0.002	0.0019	<0.006	0.35	<0.0025	0.016	<0.02	**0.038**	0.0099
	02/26/18	200.7/200.8	0.0022	0.064	<0.002	<0.006	<0.006	0.1	<0.0005	0.012	0.0029	**0.033**	0.0088
	12/08/17	200.7/200.8	0.0032	0.05	<0.002	<0.006	<0.006	0.024	<0.0005	0.0064	0.0039	**0.04**	0.007

8.1.3 BW-1C, BW-2A, BW-2B, BW-2C, BW-3B, BW-3C, BW-5A, BW-5B, BW-5C
Dissolved Metals Analytical Result Summary

			PARAMETERS										
STANDARDS			Arsenic (mg/L)	Barium (mg/L)	Cadmium (mg/L)	Chromium (mg/L)	Copper (mg/L)	Iron (mg/L)	Lead (mg/L)	Manganese (mg/L)	Selenium (mg/L)	Uranium (mg/L)	Zinc (mg/L)
WQCC 20 NMAC 6.2.3103 (DEC 2018)			**0.01**	**2.0**	**0.005**	**0.05**	**1.0**	**1.0**	**0.015**	**0.2**	**0.05**	**0.03**	**10.0**
40 CFR 141.62 MCL			0.01	2.0	0.005	0.1	1.3	NE	0.015	NE	0.05	0.03	NE
NMED TAP WATER (Rev 2. JUN 2019)			0.000855	3.28	0.00624	0.0057	0.7898	13.8	NE	2.02	0.0987	0.0592	5.96
EPA RSL for Tap Water (NOV 2019)			0.000052	3.80	0.0092	22	0.8	14	0.015	0.43	0.1	0.004	6
WELL ID	**DATE SAMPLED**	**METHOD**											
BW-5C	10/16/19	200.7/200.8	<0.005	0.098	<0.002	<0.006	0.0017	0.44	<0.0025	0.028	<0.005	**0.044**	0.026
	08/15/19	200.7/200.8	0.00038	0.089	<0.002	<0.006	0.0039	0.3	<0.0005	0.021	0.00073	**0.046**	0.013
	05/21/19	200.7/200.8	0.00035	0.096	<0.002	<0.006	<0.006	0.37	<0.0005	0.028	0.0019	**0.039**	0.038
	03/27/19	200.7/200.8	0.00032	0.093	<0.002	<0.006	<0.006	0.47	<0.0005	0.031	0.0011	**0.04**	0.026
	11/13/18	200.7/200.8	0.00048	0.093	<0.002	<0.006	<0.006	0.43	<0.0005	0.031	<0.001	**0.042**	0.034
	09/10/18	200.7/200.8	0.00075	0.094	<0.002	<0.006	<0.006	0.5	<0.0005	0.034	0.00093	**0.038**	0.0062
	05/14/18	200.7/200.8	0.0036	0.088	<0.002	<0.006	<0.006	0.42	<0.0025	0.03	<0.02	**0.048**	0.0059
	02/26/18	200.7/200.8	*<0.01**	0.1	<0.002	<0.006	<0.006	0.32	<0.0005	0.033	<0.01	**0.036**	0.0074
	12/08/17	200.7/200.8	*<0.02**	0.011	<0.002	<0.006	<0.006	0.29	<0.0005	0.043	<0.01	**0.041**	0.0074

DEFINITIONS
NA = Not analyzed; NE = Not established
Bold and highlighted values represent values above the applicable standards

STANDARDS
WQCC 20 NMAC 6.2.3103 - Standards for Ground Water of 10,000 mg/l TDS Concentration or Less.
a) Human Health Standards; b) Other Standards for Domestic Water
40 CFR 141.62 Maximum Contaminant Levels for Inorganic Contaminants
NMED Risk Assessment Guidance for Investigations and Remediations Table A-1
EPA Regional Screening Level (RSL) Summary Table

NOTES
Wells marked in red were not sampled because the well was dry
Items noted with a * and italics have a detection limit greater than or equal to the applicable standard.
1) Did not sample BW-4B in the 4th Qtr 2019 - not enough water for sampling. Recharge slow.

8.1.4 BW-1C, BW-3B, BW-3C, BW-5A, BW-5B, BW-5C

Volatile and Semi-Volatile Organic Compound Analytical Result Summary

STANDARDS			PARAMETERS								
			Acetone (mg/L)	Benzoic Acid (mg/L)	Bis(2-ethylhexyl) phthalate (mg/L)	1,2-Dichloroethane (EDC) (mg/L)	1,1-Dichloroethane (mg/L)	1,2-Dibromethane (EDB) (mg/L)	Carbon disulfide (mg/L)	1,4-Dioxane (mg/L)	Di-n-octyl phthalate (mg/L)
WQCC 20 NMAC 6.2.3103 (DEC 2018)			NE	NE	NE	**0.005**	**0.025**	**0.00005**	NE	NE	NE
40 CFR 141.61 MCL			NE	NE	**0.006**	0.005	NE	0.00005	NE	NE	NE
NMED TAP WATER (Rev 2. JUN 2019)			**14.06**	NE	0.0556	0.0017	0.0275	0.0000747	**0.81**	**0.00459**	NE
EPA RSL for Tap Water (NOV 2019)			14	**75**	0.0056	0.013	0.0028	0.000075	NE	0.00046	**0.2**
WELL ID	**DATE SAMPLED**	**METHOD**									
BW-1A	08/14/19		Dry								
BW-1B	08/14/19		Dry								
BW-1C [2]	08/15/19	8260B	<0.01	NA	NA	<0.001	<0.001	*<0.001**	<0.010		
	09/12/18	8260B	0.0045	NA	NA	<0.001	<0.001				
	09/13/17	8260B	0.0036	NA	NA	<0.001	<0.001				
	09/03/16	8260B	<0.010	NA	NA	<0.001	<0.001				
	08/12/15	8260B	<0.010	NA	NA	<0.001	<0.001				
	09/10/14	8270C/8260B	<0.010	<0.02	*<0.01**	<0.001	<0.001				
	09/09/13	8270C/8260B	<0.010	<0.04	**0.01**	<0.001	<0.001				
BW-2A [2]	08/14/19	8260B	<0.010	NA	NA	<0.001	<0.001	*<0.001**	<0.010		
	09/12/18	8260B	<0.010	NA	NA	<0.001	<0.001				
	09/13/17	8260B	0.0091	NA	NA	<0.001	<0.001				
	09/08/16	8260B	<0.010	NA	NA	<0.001	<0.001				
	08/12/15	8260B	<0.010	NA	NA	<0.001	<0.001				
	09/09/14	8270C/8260B	<0.010	<0.02	*<0.01**	<0.001	<0.001				
	09/09/13	8270C/8260B	<0.010	<0.02	*<0.01**	<0.001	<0.001				
	07/20/10	8270C/8260									
	07/06/09	8270C/8260									
	07/30/08	8270C/8260									
	12/31/07	8270C/8260									
	10/27/06	8270C/8260B									
BW-2B [2]	08/14/19	8260B	<0.01	NA	NA	<0.001	<0.001	*<0.001**	<0.010		
	09/12/18	8260B	0.0042	NA	NA	<0.001	<0.001				
	09/13/17	8260B	0.0061	NA	NA	<0.001	<0.001				
	09/08/16	8260B	<0.010	NA	NA	<0.001	<0.001				
	08/12/15	8260B	<0.010	NA	NA	<0.001	<0.001				
	09/09/14	8270C/8260B	<0.010	<0.02	*<0.01**	<0.001	<0.001				
	09/09/13	8270C/8260B	<0.010	<0.02	*<0.01**	<0.001	<0.001				
BW-2C [2]	08/14/19	8260B	<0.01	NA	NA	<0.001	<0.001	*<0.001**	<0.010		
	09/18/18	8260B	0.0041	NA	NA	<0.001	<0.001				
	09/13/17	8260B	0.0069	NA	NA	<0.001	<0.001				
	09/08/16	8260B	<0.010	NA	NA	<0.001	<0.001				
	08/12/15	8260B	<0.010	NA	NA	<0.001	<0.001				
	09/10/14	8270C/8260B	<0.010	<0.02	*<0.01**	<0.001	<0.001				
	09/09/13	8270C/8260B	<0.010	<0.02	*<0.01**	<0.001	<0.001				

8.1.4 BW-1C, BW-3B, BW-3C, BW-5A, BW-5B, BW-5C

Volatile and Semi-Volatile Organic Compound Analytical Result Summary

			PARAMETERS								
STANDARDS			Acetone (mg/L)	Benzoic Acid (mg/L)	Bis(2-ethylhexyl) phthalate (mg/L)	1,2-Dichloroethane (EDC) (mg/L)	1,1-Dichloroethane (mg/L)	1,2-Dibromethane (EDB) (mg/L)	Carbon disulfide (mg/L)	1,4-Dioxane (mg/L)	Di-n-octyl phthalate (mg/L)
WQCC 20 NMAC 6.2.3103 (DEC 2018)			NE	NE	NE	**0.005**	**0.025**	**0.00005**	NE	NE	NE
40 CFR 141.61 MCL			NE	NE	**0.006**	0.005	NE	0.00005	NE	NE	NE
NMED TAP WATER (Rev 2. JUN 2019)			**14.06**	NE	0.0556	0.0017	0.0275	0.0000747	**0.81**	**0.00459**	NE
EPA RSL for Tap Water (NOV 2019)			14	**75**	0.0056	0.013	0.0028	0.000075	NE	0.00046	**0.2**
WELL ID	**DATE SAMPLED**	**METHOD**									
BW-3A	08/14/19		Dry								
BW-3B [2]	08/14/19	8260B	<0.01	NA	NA	<0.001	<0.001	*<0.001**	<0.010		
	09/12/18	8260B	0.0035	NA	NA	<0.001	<0.001				
	09/13/17	8260B	0.0086	NA	NA	<0.001	<0.001				
	09/08/16	8260B	<0.010	NA	NA	<0.001	<0.001				
	08/12/15	8260B	<0.010	NA	NA	<0.001	<0.001				
	09/10/14	8270C/8260B	<0.010	<0.02	*<0.01**	<0.001	<0.001				
	09/09/13	8270C/8260B	<0.010	<0.02	*<0.01**	<0.001	<0.001				
BW-3C [2]	08/14/19	8260B	<0.01	NA	NA	<0.001	<0.001	*<0.001**	<0.010		
	09/18/18	8260B	0.0019	NA	NA	<0.001	<0.001				
	09/13/17	8260B	0.0038	NA	NA	<0.001	<0.001				
	09/08/16	8260B	<0.010	NA	NA	<0.001	<0.001				
	08/12/15	8260B	<0.010	NA	NA	<0.001	<0.001				
	09/10/14	8270C/8260B	<0.010	<0.02	*<0.01**	<0.001	<0.001				
	09/09/13	8270C/8260B	<0.010	<0.02	*<0.01**	<0.001	<0.001				
	08/23/12	8270C/8260B	<0.010	<0.02	*<0.01**	<0.001	<0.001				
	10/28/11	8270C			**0.014** [1]						
BW-4A	03/27/19		Dry								
	05/21/19		Dry								
	08/23/19		Dry								
	10/16/19		Dry								
BW-4B [3]	08/23/19	8270C/8260B	<0.01	<0.02	*<0.01**	<0.001	<0.001	*<0.001**	<0.01		<0.01
	05/22/19	270C/8260B/8011/504.	0.012	<0.1	*<0.05**	<0.001	<0.001	<0.0000093	0.00063		0.02
	03/27/19	8270C/8260B	0.0046	0.0067	*<0.01**	<0.001	<0.001				
	11/13/18	8270C/8260B	0.002	<0.1	**0.13**	<0.001	<0.001				
BW-5A	03/27/19		Dry								
	05/21/19		Dry								
	08/23/19		Dry								
	10/16/19		Dry								

8.1.4 BW-1C, BW-3B, BW-3C, BW-5A, BW-5B, BW-5C

Volatile and Semi-Volatile Organic Compound Analytical Result Summary

STANDARDS			PARAMETERS								
			Acetone (mg/L)	Benzoic Acid (mg/L)	Bis(2-ethylhexyl) phthalate (mg/L)	1,2-Dichloroethane (EDC) (mg/L)	1,1-Dichloroethane (mg/L)	1,2-Dibromethane (EDB) (mg/L)	Carbon disulfide (mg/L)	1,4-Dioxane (mg/L)	Di-n-octyl phthalate (mg/L)
WQCC 20 NMAC 6.2.3103 (DEC 2018)			NE	NE	NE	**0.005**	**0.025**	**0.00005**	NE	NE	NE
40 CFR 141.61 MCL			NE	NE	**0.006**	0.005	NE	0.00005	NE	NE	NE
NMED TAP WATER (Rev 2. JUN 2019)			**14.06**	NE	0.0556	0.0017	0.0275	0.0000747	**0.81**	**0.00459**	NE
EPA RSL for Tap Water (NOV 2019)			14	**75**	0.0056	0.013	0.0028	0.000075	NE	0.00046	**0.2**
WELL ID	**DATE SAMPLED**	**METHOD**									
BW-5B	10/16/19	8270C/8260B	<0.01	<0.02	0.00394	<0.001	<0.001	*<0.001**			
	08/15/19	8270C/8260B	<0.01	<0.02	*<0.01**	<0.001	<0.001	*<0.001**			
	05/22/19	270C/8260B/8011/504.	0.016	<0.02	*<0.01**	<0.001	<0.001	<0.0000093			
	03/27/19	8270C/8260B	0.0042	<0.02	*<0.01**	<0.001	<0.001				
	11/13/18	8270C/8260B	0.0024	<0.02	**0.016**	0.00036	0.00037				
	09/10/18	8270C/8260B	0.0013	0.0066	*<0.01**	<0.001	<0.001				
	05/14/18	8270C/8260B	0.002	<0.02	*<0.01**	<0.001	<0.001				
	02/26/18	8270C/8260B	<0.010	0.032	*<0.01**	<0.001	<0.001				
	12/08/17	8270C	0.0015	0.0065	*<0.01**	<0.001	<0.001				
BW-5C	10/16/19	8270C/8260B	<0.01	<0.0005	*<0.05**	0.00067	0.00082	<0.0000094		0.00452	
	08/15/19	8270C/8260B	<0.01	<0.02	**0.0069**	0.00066	0.00091	*<0.001**			
	05/21/19	270C/8260B/8011/504.	<0.01	0.014	*<0.01**	0.00066	0.0011	<0.0000093			
	03/27/19	8270C/8260B	0.0055	0.0085	*<0.01**	0.00052	0.00067				
	11/13/18	8270C/8260B	0.0018	<0.1	*<0.05**	0.00062	0.00076				
	09/10/18	8270C/8260B	0.0037	0.0064	*<0.01**	0.00056	0.00078				
	05/14/18	8270C/8260B	0.002	<0.02	*<0.01**	0.00063	0.00081				
	02/26/18	8270C/8260B	<0.010	0.021	*<0.01**	0.00062	0.00076				
	12/08/17	8270C/8260B	0.0011	0.0047	*<0.01**	0.00058	0.00066				

DEFINITIONS

NA = Not analyzed; NE = Not established

Bold and highlighted values represent values above the applicable standards

STANDARDS

WQCC 20 NMAC 6.2.3103 - Standards for Ground Water of 10,000 mg/l TDS Concentration or Less.

a) Human Health Standards; b) Other Standards for Domestic Water

40 CFR 141.61 Maximum Contaminant Levels for Organic Contaminants

NMED Risk Assessment Guidance for Investigations and Remediations Table A-1

EPA Regional Screening Level (RSL) Summary Table

NOTES

Wells marked in red were not sampled because the well was dry

Items notes with a * and italics have a detection limit greater than or equal to the applicable standard.

1) Detected for the first time. Possible lab contaminant.

2) Request to remove 8270C Analysis in 2015 approved per NMED Comment 7(b), Approval with Modification, FWGWMWP - 2012 Updates; 2013 Updates; 2014 Updates for 2015.

3) Did not sample BW-4B in the 4th Qtr 2019 - not enough water for sampling. Recharge slow.

8.2 MW-1, MW-2, MW-4, MW-5
BTEX and MTBE Analytical Result Summary

STANDARDS			PARAMETERS				
			Benzene (mg/L)	Toluene (mg/L)	Ethylbenzene (mg/L)	Total Xylenes (mg/L)	MTBE (mg/L)
WQCC 20NMAC 6.2.3103 (DEC 2018)			0.005	1	0.7	0.62	0.1
40 CFR 141.61 MCL			0.005	1.0	0.7	10	NE
NMED TAP WATER (Rev 2. JUN 2019)			0.00455	1.1	0.015	0.193	0.143
EPA RSL for Tap Water (NOV 2019)			0.0046	1.1	0.015	0.19	0.14
WELL ID	DATE SAMPLED	METHOD					
MW-1	08/12/19	8260B	<0.001	<0.001	<0.001	<0.0015	<0.001
	12/06/18 [1]	8260B	<0.001	<0.001	<0.001	<0.0015	<0.001
	09/13/18	8260B	<0.001	<0.001	<0.001	<0.0015	<0.001
	09/20/17	8260B	<0.001	<0.001	<0.001	<0.0015	<0.001
	09/07/16	8260B	<0.001	<0.001	<0.001	<0.0015	<0.001
	08/14/15	8260B	<0.001	<0.001	<0.001	<0.0015	<0.001
	09/16/14	8260B	<0.001	<0.001	<0.001	<0.0015	<0.001
	09/09/13	8260B	<0.001	<0.001	<0.001	<0.0015	<0.001
	08/24/12	8260B	<0.001	<0.001	<0.001	<0.0015	<0.001
	10/06/11	8260B	<0.001	<0.001	<0.001	<0.0015	<0.001
	07/16/10	8260B	<0.001	<0.001	<0.001	<0.0015	<0.001
MW-2	08/13/19	8260B	<0.001	<0.001	<0.001	<0.0015	<0.001
	12/06/18 [1]	8260B	<0.001	<0.001	<0.001	<0.0015	<0.001
	09/13/18	8260B	<0.001	<0.001	<0.001	<0.0015	<0.001
	09/20/17	8260B	<0.001	<0.001	<0.001	<0.0015	<0.001
	09/07/16	8260B	<0.001	<0.001	<0.001	<0.0015	<0.001
	08/14/15	8260B	<0.001	<0.001	<0.001	<0.0015	<0.001
	09/16/14	8260B	<0.001	<0.001	<0.001	<0.0015	<0.001
	09/10/13	8260B	<0.001	<0.001	<0.001	<0.0015	<0.001
	08/24/12	8260B	<0.001	<0.001	<0.001	<0.0015	<0.001
	10/10/11	8260B	<0.001	<0.001	<0.001	<0.0015	<0.001
MW-4	08/13/19	8260B	<0.001	<0.001	<0.001	<0.0015	<0.001
	12/06/18 [1]	8260B	<0.001	<0.001	<0.001	<0.0015	<0.001
	09/13/18	8260B	<0.001	<0.001	<0.001	<0.0015	<0.001
	09/21/17	8260B	<0.001	<0.001	<0.001	<0.0015	<0.001
	09/07/16	8260B	<0.001	<0.001	<0.001	<0.0015	<0.001
	08/17/15	8260B	<0.001	<0.001	<0.001	<0.0015	<0.001
	09/17/14	8260B	<0.001	<0.001	<0.001	<0.0015	<0.001
	09/10/13	8260B	<0.001	<0.001	<0.001	<0.0015	<0.001
	08/21/12	8260B	<0.001	<0.001	<0.001	<0.0015	<0.001
	10/12/11	8260B	<0.001	<0.001	<0.001	<0.0015	<0.001
	07/19/10	8260B	<0.001	<0.001	<0.001	<0.0015	<0.001

8.2 MW-1, MW-2, MW-4, MW-5
BTEX and MTBE Analytical Result Summary

STANDARDS			PARAMETERS				
			Benzene (mg/L)	Toluene (mg/L)	Ethylbenzene (mg/L)	Total Xylenes (mg/L)	MTBE (mg/L)
WQCC 20NMAC 6.2.3103 (DEC 2018)			**0.005**	**1**	**0.7**	**0.62**	**0.1**
40 CFR 141.61 MCL			0.005	1.0	0.7	10	NE
NMED TAP WATER (Rev 2. JUN 2019)			0.00455	1.1	0.015	0.193	0.143
EPA RSL for Tap Water (NOV 2019)			0.0046	1.1	0.015	0.19	0.14
WELL ID	**DATE SAMPLED**	**METHOD**					
MW-5	08/14/19	8260B	<0.001	<0.001	<0.001	<0.0015	<0.001
	12/06/18 [1]	8260B	<0.001	<0.001	<0.001	<0.0015	<0.001
	09/17/18	8260B	<0.001	<0.001	<0.001	<0.0015	<0.001
	09/11/17	8260B	<0.001	<0.001	<0.001	<0.0015	<0.001
	09/07/16	8260B	<0.001	<0.001	<0.001	<0.0015	<0.001
	08/14/15	8260B	<0.001	<0.001	<0.001	<0.0015	<0.001
	09/17/14	8260B	<0.001	<0.001	<0.001	<0.0015	<0.001
	09/10/13	8260B	<0.001	<0.001	<0.001	<0.0015	<0.001
`	08/23/12	8260B	<0.001	<0.001	<0.001	<0.0015	<0.001
	10/10/11	8260B	<0.001	<0.001	<0.001	<0.0015	<0.001
	07/19/10	8260B	<0.001	<0.001	<0.001	<0.0015	<0.001

DEFINITIONS

NA = Not analyzed; NE = Not established

Bold and highlighted values represent values above the applicable standards

STANDARDS

WQCC 20 NMAC 6.2.3103 - Standards for Ground Water of 10,000 mg/l TDS Concentration or Less.

a) Human Health Standards; b) Other Standards for Domestic Water

40 CFR 141.61 Maximum Contaminant Levels for Organic Contaminants

NMED Risk Assessment Guidance for Investigations and Remediations Table A-1

EPA Regional Screening Level (RSL) Summary Table

NOTES

(1) RCRA Post Closure Sampling Event

8.2.1 MW-1, MW-2, MW-4, MW-5
General Chemistry and DRO/GRO/MRO Analytical Result Summary

STANDARDS			PARAMETERS							
			Fluoride (mg/L)	Chloride (mg/L)	Nitrite (mg/L)	Nitrate (mg/L)	Sulfate (mg/L)	DRO (mg/L)	GRO (mg/L)	MRO (mg/L)
WQCC 20NMAC 6.2.3103 (DEC 2018)			**1.6**	**250.0**	**1**	**10**	**600.0**	NE	NE	NE
40 CFR 141.61 MCL			4.0	NE	1	10	NE	NE	NE	NE
#REF!			1.18	NE	1.97	31.60	NE	NE	NE	NE
#REF!			0.8	NE	2	32	NE	NE	NE	NE
NMED SSG (JUN 2019)			NE	NE	NE	NE	NE	**0.0167**	**0.0101**	**0.0858**
WELL ID	**DATE SAMPLED**	**METHOD**								
MW-1	08/12/19	300.0/8015D	0.73	47	<0.5	<0.5	170	*<1.0**	*<0.05**	*<5.0**
	12/06/18 [2]	8015D	NA	NA	NA	NA	NA	*<1.0**	*<0.05**	*<5.0**
	09/13/18	300.0/8015D	0.8	48	<0.5	0.049	160	*<1.0**	*<0.05**	*<5.0**
	09/20/17	300.0/8015D	0.61	48	*<1.0**	<1.0	170	*<1.0**	*<0.05**	*<5.0**
	09/07/16	300.0/8015D	0.63	44	*<1.0**	<1.0	150	*<1.0**	**0.025**	*<5.0**
	08/14/15	300.0/8015D	0.39	23	*<1.0**	<1.0	73	*<1.0**	*<0.05**	*<5.0**
	09/16/14	300.0/8015B	0.69	44	*<1.0**	<1.0	150	*<1.0**	*<0.05**	*<5.0**
	09/09/13	300.0/8015B	0.61	44	**4.1**	4.1	150	*<1.0**	*<0.05**	*<5.0**
	08/24/12	300.0/8015B	0.67	47	*<1.0**	<1.0	140	*<1.0**	*<0.05**	*<5.0**
	10/06/11	300.0/8015B	0.64	47	**27**	**27**	160	*<1.0**	*<0.05**	*<5.0**
	07/16/10	300.0/8015B	NA	NA	NA	NA	NA	*<1.0**	*<0.05**	NA
MW-2	08/13/19	300.0/8015D	0.74	54	<0.5	<0.5	170	*<1.0**	*<0.05**	*<5.0**
	12/06/18 [2]	8015D	NA	NA	NA	NA	NA	*<1.0**	*<0.05**	*<5.0**
	09/13/18	300.0/8015D	0.87	56	<0.5	<0.5	170	*<1.0**	*<0.05**	*<5.0**
	09/20/17	300.0/8015D	0.63	56	*<1.0**	<1.0	170	*<1.0**	*<0.05**	*<5.0**
	09/07/16	300.0/8015D	0.66	50	*<1.0**	<1.0	150	*<1.0**	**0.021**	*<5.0**
	08/14/15	300.0/8015D	0.54	35	*<1.0**	<1.0	100	*<1.0**	*<0.05**	*<5.0**
	09/16/14	300.0/8015B	0.73	51	**21**	**21**	150	*<1.0**	*<0.05**	*<5.0**
	09/10/13	300.0/8015B	0.77	50	<0.1	0.11	150	*<1.0**	*<0.05**	*<5.0**
	08/24/12	300.0	0.67	49	*<1.0**	<1.0	150	*<1.0**	*<0.05**	*<5.0**
	10/10/11	300.0	0.79	52	*<1.0**	<1.0	160	*<1.0**	*<0.05**	*<5.0**

8.2.1 MW-1, MW-2, MW-4, MW-5
General Chemistry and DRO/GRO/MRO Analytical Result Summary

STANDARDS			PARAMETERS							
			Fluoride (mg/L)	Chloride (mg/L)	Nitrite (mg/L)	Nitrate (mg/L)	Sulfate (mg/L)	DRO (mg/L)	GRO (mg/L)	MRO (mg/L)
WQCC 20NMAC 6.2.3103 (DEC 2018)			**1.6**	**250.0**	**1**	**10**	**600.0**	NE	NE	NE
40 CFR 141.61 MCL			4.0	NE	1	10	NE	NE	NE	NE
#REF!			1.18	NE	1.97	31.60	NE	NE	NE	NE
#REF!			0.8	NE	2	32	NE	NE	NE	NE
NMED SSG (JUN 2019)			NE	NE	NE	NE	NE	**0.0167**	**0.0101**	**0.0858**
WELL ID	**DATE SAMPLED**	**METHOD**								
MW-4	08/13/19	300.0/8015D	0.34	16	*<1.0**	<1.0	160	*<1.0**	*<0.05**	*<5.0**
	12/06/18 [2]	8015D	NA	NA	NA	NA	NA	*<1.0**	*<0.05**	*<5.0**
	09/13/18	300.0/8015D	0.42	16	<0.5	<0.5	150	*<1.0**	*<0.05**	*<5.0**
	09/21/17	300.0/8015D	<0.5	16	*<1.0**	<1.0	160	*<1.0**	*<0.05**	*<5.0**
	09/07/16	300.0/8015D	0.21	18	*<1.0**	<1.0	140	*<1.0**	**0.02**	*<5.0**
	08/17/15	300.0/8015D	0.29	18	*<1.0**	<1.0	140	*<1.0**	*<0.05**	*<5.0**
	09/17/14	300.0/8015B	0.31	18	*<1.0**	<1.0	140	*<1.0**	*<0.05**	*<5.0**
	09/10/13	300.0/8015B	0.32	18	<0.1	0.14	150	*<1.0**	*<0.05**	*<5.0**
	08/21/12	300.0/8015B	0.29	16	*<1.0**	<1.0	140	*<1.0**	*<0.05**	*<5.0**
	10/12/11	300.0/8015B	0.35	18	**6.8**	6.8	150	*<1.0**	*<0.05**	*<5.0**
	07/19/10	300.0/8015B	NA	NA	NA	NA	NA	*<1.0**	*<0.05**	NA
	03/01/10 [1]	8015B	NA	NA	NA	NA	NA	*<1.0**	*<0.05**	NA

8.2.1 MW-1, MW-2, MW-4, MW-5
General Chemistry and DRO/GRO/MRO Analytical Result Summary

			PARAMETERS							
STANDARDS			Fluoride (mg/L)	Chloride (mg/L)	Nitrite (mg/L)	Nitrate (mg/L)	Sulfate (mg/L)	DRO (mg/L)	GRO (mg/L)	MRO (mg/L)
WQCC 20NMAC 6.2.3103 (DEC 2018)			**1.6**	**250.0**	**1**	**10**	**600.0**	NE	NE	NE
40 CFR 141.61 MCL			4.0	NE	1	10	NE	NE	NE	NE
#REF!			1.18	NE	1.97	31.60	NE	NE	NE	NE
#REF!			0.8	NE	2	32	NE	NE	NE	NE
NMED SSG (JUN 2019)			NE	NE	NE	NE	NE	**0.0167**	**0.0101**	**0.0858**
WELL ID	DATE SAMPLED	METHOD								
MW-5	08/14/19	300.0/8015D	0.77	60	<0.5	<0.5	180	*<1.0**	*<0.05**	*<5.0**
	12/06/18 [2]	8015D	NA	NA	NA	NA	NA	*<1.0**	*<0.05**	*<5.0**
	09/17/18	300.0/8015D	0.7	63	<0.5	<0.5	170	*<1.0**	*<0.05**	*<5.0**
	09/11/17	300.0/8015D	0.68	60	*<1.0**	<1.0	170	*<1.0**	*<0.05**	*<5.0**
	09/07/16	300.0/8015D	0.65	56	*<1.0**	<1.0	160	*<1.0**	**0.027**	*<5.0**
	08/14/15	300.0/8015D	0.72	58	*<1.0**	<1.0	160	*<1.0**	*<0.05**	*<5.0**
	09/17/14	300.0/8015B	0.73	56	**1.1**	1.1	150	*<1.0**	*<0.05**	*<5.0**
	09/10/13	300.0/8015B	0.76	57	<0.1	0.8	160	*<1.0**	*<0.05**	*<5.0**
	08/23/12	300.0/8015B	0.67	55	*<1.0**	<1.0	160	*<1.0**	*<0.05**	*<5.0**
	10/10/11	300.0/8015B	0.79	59	*<1.0**	<1.0	170	*<1.0**	*<0.05**	*<5.0**
	07/19/10	300.0/8015B	NA	NA	NA	NA	NA	*<1.0**	*<0.05**	NA
	03/01/10 [1]	8015B	NA	NA	NA	NA	NA	*<1.0**	*<0.05**	NA

DEFINITIONS

NA = Not analyzed; NE = Not established

Bold and highlighted values represent values above the applicable standards

STANDARDS

WQCC 20 NMAC 6.2.3103 - Standards for Ground Water of 10,000 mg/l TDS Concentration or Less.

a) Human Health Standards; b) Other Standards for Domestic Water

40 CFR 141.62 Maximum Contaminant Levels for Inorganic Contaminants

NMED Risk Assessment Guidance for Investigations and Remediations Table A-1

EPA Regional Screening Level (RSL) Summary Table

NOTES

Items notes with a * and italics have a detection limit greater than or equal to the applicable standard.

Items highlighted were analyzed by nitrogen, nitrate & nitrite and the result is reported for both.

1) RCRA Post Closure Sampling Event

8.2.2 MW-1, MW-2, MW-4, MW-5
Total Metals Analytical Result Summary

STANDARDS			PARAMETERS										
			Arsenic (mg/L)	Barium (mg/L)	Chromium (mg/L)	Iron (mg/L)	Lead (mg/L)	Manganese (mg/L)	Selenium (mg/L)	Cyanide (mg/L)	Mercury (ug/L)	Uranium (mg/L)	Zinc (mg/L)
WQCC 20 NMAC 6.2.3103 (DEC 2018)			0.01	2	0.05	1.0	0.015	0.2	0.05	0.2	2	0.03	10
40 CFR 141.62 MCL			0.01	2.0	0.1	NE	0.015	NE	0.05	0.2	2	0.03	NE
NMED TAP WATER (Rev 2. JUN 2019)			0.000855	3.28	0.0057	13.8	NE	2.02	0.0987	0.00146	0.626	0.0592	5.96
EPA RSL for Tap Water (NOV 2019)			0.000052	3.80	22	14	0.015	0.43	0.1	0.0015	0.63	0.004	6
WELL ID	DATE SAMPLED	METHOD											
MW-1	08/12/19	200.7/200.8	0.0013	0.014	0.0017	0.12	0.00037	0.0046	<0.001	<0.005	0.054	0.01	<0.01
	12/06/18 [2]	6010B/6020	0.0011	<0.02	<0.006	NA	<0.001	NA	<0.001	<0.01	0.096	NA	<0.02
	09/13/18	200.7/200.8	0.0013	0.013	0.0018	0.16	0.0013	0.01	<0.001	<0.005	NA	0.0094	<0.01
	09/20/17	200.7/200.8	0.00097	0.015	0.0074	0.26	0.0016	0.014	<0.001	<0.005	<0.2	NA	<0.01
	09/07/16	200.7/200.8	0.0015	0.012	<0.006	<0.02	0.00014	0.0032	0.00053	<0.01	0.056	0.01	<0.01
	08/14/15	200.7/200.8	0.0013	0.013	<0.006	0.048	0.00051	0.0033	<0.001	<0.01	<0.2	0.011	<0.01
	09/16/14	200.7/200.8	0.0011	0.012	<0.006	0.11	0.0017	0.012	<0.001	<0.01	<0.2	0.012	<0.01
	09/09/13	200.7/200.8	0.0014	0.011	<0.006	<0.02	<0.001	<0.002	<0.001	0.0407	<0.2	0.011	<0.01
	08/24/12	200.7/200.8	<0.0025	0.014	<0.006	0.078	<0.005	0.0071	<0.0025	NA	<0.2	0.011	<0.01
	10/06/11	200.7/200.8	<0.0025	0.012	<0.006	0.12	<0.005	0.01	<0.0025	NA	<0.2	0.011	<0.01
	07/16/10	6010B	0.0015	<0.02	<0.006	NA	<0.005	NA	<0.001	<0.01	<0.2	NA	<0.02
	03/01/10 [1]	6010B	<0.005	<0.02	<0.006	NA	<0.005	NA	<0.005	<0.01	<0.2	NA	<0.02
MW-2	08/13/19	200.7/200.8	0.0012	0.017	<0.006	0.01	<0.0005	0.0026	<0.001	<0.005	0.046	0.0086	0.0075
	12/06/18 [2]	6010B/6020	0.0011	<0.02	<0.006	NA	<0.001	NA	<0.001	<0.01	0.091	NA	<0.02
	09/13/18	200.7/200.8	0.00099	0.017	<0.006	0.01	<0.0005	0.0026	<0.001	<0.005	NA	0.008	<0.01
	09/20/17	200.7/200.8	0.00073	0.022	<0.006	0.097	0.00055	0.018	<0.001	<0.005	0.04	NA	<0.01
	09/07/16	200.7/200.8	0.0013	0.02	<0.006	0.023	<0.0005	0.0031	0.00058	<0.01	0.056	0.0088	<0.01
	08/14/15	200.7/200.8	<0.001	0.02	<0.006	0.023	<0.0005	0.0035	<0.001	<0.01	<0.2	0.0094	<0.01
	09/16/14	200.7/200.8	<0.001	0.019	<0.006	<0.02	<0.001	0.0031	<0.001	<0.01	<0.2	0.0095	<0.01
	09/10/13	200.7/200.8	0.001	0.02	<0.006	<0.02	<0.001	0.006	<0.001	<0.01	<0.2	0.0097	<0.01
	08/24/12	200.7/200.8	<0.0025	0.021	<0.006	0.022	<0.005	0.0072	<0.0025	NA	<0.2	0.0097	<0.01
	10/10/11	200.7/200.8	<0.0025	0.02	<0.006	<0.02	<0.005	0.008	<0.0025	NA	<0.2	0.0096	<0.01
	03/01/10 [1]	6010B	<0.005	<0.02	<0.006	NA	<0.005	NA	<0.005	<0.01	<0.2	NA	<0.02

8.2.2 MW-1, MW-2, MW-4, MW-5
Total Metals Analytical Result Summary

STANDARDS			PARAMETERS										
			Arsenic (mg/L)	Barium (mg/L)	Chromium (mg/L)	Iron (mg/L)	Lead (mg/L)	Manganese (mg/L)	Selenium (mg/L)	Cyanide (mg/L)	Mercury (ug/L)	Uranium (mg/L)	Zinc (mg/L)
WQCC 20 NMAC 6.2.3103 (DEC 2018)			**0.01**	**2**	**0.05**	**1.0**	**0.015**	**0.2**	**0.05**	**0.2**	**2**	**0.03**	**10**
40 CFR 141.62 MCL			0.01	2.0	0.1	NE	0.015	NE	0.05	0.2	2	0.03	NE
NMED TAP WATER (Rev 2. JUN 2019)			0.000855	3.28	0.0057	13.8	NE	2.02	0.0987	0.00146	0.626	0.0592	5.96
EPA RSL for Tap Water (NOV 2019)			0.000052	3.80	22	14	0.015	0.43	0.1	0.0015	0.63	0.004	6
WELL ID	DATE SAMPLED	METHOD											
MW-4	08/13/19	200.7/200.8	0.00071	0.02	<0.006	<0.02	<0.0005	0.0056	<0.001	<0.005	<0.2	0.013	<0.01
	12/06/18 [2]	6010B/6020	0.00075	0.021	<0.006	NA	<0.001	NA	<0.001	<0.01	0.087	NA	<0.02
	09/13/18	200.7/200.8	0.00076	0.02	<0.006	<0.02	<0.0005	0.0059	<0.001	<0.005	NA	0.014	<0.01
	09/21/17	200.7/200.8	0.00084	0.02	<0.006	0.021	0.00017	0.0069	<0.001	<0.005	<0.2	NA	<0.01
	09/07/16	200.7/200.8	0.00098	0.022	<0.006	0.028	0.00017	0.0064	0.00065	<0.01	<0.2	0.016	<0.01
	08/17/15	200.7/200.8	<0.001	0.02	<0.006	<0.02	<0.0005	0.0052	<0.001	<0.01	<0.2	0.016	<0.01
	09/17/14	200.7/200.8	<0.001	0.022	<0.006	<0.02	<0.001	0.0061	<0.001	<0.01	<0.2	0.018	<0.01
	09/10/13	200.7/200.8	<0.001	0.021	<0.006	<0.02	<0.001	0.0058	<0.001	<0.01	<0.2	0.018	<0.01
	08/21/12	200.7/200.8	<0.0025	0.02	<0.006	<0.02	<0.005	0.0034	<0.0025	NA	<0.2	0.018	<0.01
	10/12/11	200.7/200.8	<0.0025	0.022	<0.006	<0.02	<0.005	0.0069	<0.0025	NA	<0.2	0.018	<0.01
	07/19/10	6010B	0.0012	<0.02	<0.006	NA	<0.005	NA	<0.001	<0.01	<0.2	NA	<0.02
	03/01/10 [1]	6010B	<0.005	0.023	<0.006	NA	<0.005	NA	<0.005	<0.01	<0.2	NA	<0.02
MW-5	08/14/19	200.7/200.8	0.00099	0.021	<0.006	<0.02	<0.0005	0.0045	<0.001	<0.005	<0.2	0.009	<0.01
	12/06/18 [2]	6010B/6020	0.001	<0.02	<0.006	NA	<0.001	NA	<0.001	<0.01	0.089	NA	<0.02
	09/17/18	200.7/200.8	0.0011	0.021	<0.006	<0.02	<0.0005	0.0045	<0.001	<0.005	0.096	0.0082	<0.01
	09/11/17	200.7/200.8	0.001	0.02	<0.006	<0.02	<0.0005	0.0043	<0.001	<0.005	<0.2	0.0099	<0.01
	09/07/16	200.7/200.8	0.0012	0.041	<0.006	<0.02	<0.0005	0.0046	0.00038	<0.01	0.055	0.0092	<0.01
	08/14/15	200.7/200.8	<0.001	0.09	<0.006	<0.02	<0.0005	0.0031	<0.001	<0.01	<0.2	0.0093	<0.01
	09/17/14	200.7/200.8	0.001	0.019	<0.006	<0.02	<0.001	0.0046	<0.001	<0.01	<0.2	0.0098	<0.01
	09/10/13	200.7/200.8	<0.001	0.04	<0.006	<0.02	<0.001	0.0035	<0.001	<0.01	<0.2	0.0096	<0.01
	08/23/12	200.7/200.8	<0.0025	0.026	<0.006	<0.02	<0.005	0.012	<0.0025	NA	<0.2	0.0095	<0.01
	10/10/11	200.7/200.8	<0.0025	0.024	<0.006	<0.02	<0.005	0.0043	<0.0025	NA	<0.2	0.0097	<0.01
	07/19/10	6010B	0.0014	<0.02	<0.006	NA	<0.005	NA	<0.001	<0.01	<0.2	NA	<0.02
	03/01/10 [1]	6010B	<0.005	0.024	<0.006	NA	<0.005	NA	<0.005	<0.01	<0.2	NA	<0.02

DEFINITIONS

NA = Not analyzed; NE = Not established

Bold and highlighted values represent values above the applicable standards

STANDARDS

WQCC 20 NMAC 6.2.3103 - Standards for Ground Water of 10,000 mg/l TDS Concentration or Less.

a) Human Health Standards; b) Other Standards for Domestic Water

40 CFR 141.62 Maximum Contaminant Levels for Inorganic Contaminants

NMED Risk Assessment Guidance for Investigations and Remediations Table A-1

EPA Regional Screening Level (RSL) Summary Table

NOTES

1) RCRA Post Closure Sampling Event

2) RCRA Post Closure Sampling Event

8.2.3 MW-1, MW-2, MW-4, MW-5
Dissolved Metals Analytical Result Summary

STANDARDS			PARAMETERS										
			Arsenic (mg/L)	Barium (mg/L)	Cadmium (mg/L)	Chromium (mg/L)	Copper (mg/L)	Iron (mg/L)	Lead (mg/L)	Manganese (mg/L)	Selenium (mg/L)	Uranium (mg/L)	Zinc (mg/L)
WQCC 20 NMAC 6.2.3103 (DEC 2018)			**0.01**	**2.0**	**0.005**	**0.05**	**1.0**	**1.0**	**0.015**	**0.2**	**0.05**	**0.03**	**10.0**
40 CFR 141.62 MCL			0.01	2.0	0.005	0.1	1.3	NE	0.015	NE	0.05	0.03	NE
NMED TAP WATER (Rev 2. JUN 2019)			0.000855	3.28	0.00624	0.0057	0.7898	13.8	NE	2.02	0.0987	0.0592	5.96
EPA RSL for Tap Water (NOV 2019)			0.000052	3.80	0.0092	NE	0.8	14	0.015	0.43	0.1	0.004	6
WELL ID	**DATE SAMPLED**	**METHOD**											
MW-1	08/12/19	200.7/200.8	0.0012	0.012	<0.002	0.0021	<0.006	<0.02	0.000099	0.0017	<0.001	0.01	0.0059
	12/06/18 [1]	--	NA	NA	NA	NA	NA	NA	NA	NA	NA	NA	NA
	09/13/18	200.7/200.8	0.0013	0.012	<0.002	0.0024	<0.006	<0.02	<0.0005	0.002	<0.001	0.0095	0.0069
	09/20/17	200.7/200.8	0.0013	0.013	<0.002	<0.006	<0.006	<0.02	<0.0005	0.0018	0.00088	NA	0.011
	09/07/16	200.7/200.8	0.0013	0.011	<0.002	<0.006	<0.006	<0.02	<0.0005	0.0031	0.00054	0.011	<0.01
	08/14/15	200.7/200.8	*<0.01**	0.011	<0.002	<0.006	<0.006	<0.02	<0.0025	<0.002	<0.01	0.011	<0.01
	09/16/14	200.7/200.8	0.0012	0.0095	<0.002	<0.006	<0.006	<0.02	<0.001	0.0027	<0.001	0.011	0.014
	09/09/13	200.7/200.8	0.0016	0.012	<0.002	<0.006	<0.006	<0.02	<0.001	<0.002	<0.001	0.012	<0.01
	08/24/12	200.7/200.8	0.0013	0.012	<0.002	<0.006	<0.006	<0.02	<0.005	<0.002	<0.001	0.011	<0.01
	10/06/11	200.7/200.8	0.002	0.01	<0.002	<0.006	<0.006	<0.02	<0.005	<0.002	<0.001	0.011	0.11
MW-2	08/13/19	200.7/200.8	0.0011	0.017	<0.002	<0.006	<0.006	<0.02	<0.0005	0.0018	<0.001	0.0084	0.01
	12/06/18 [1]	--	NA	NA	NA	NA	NA	NA	NA	NA	NA	NA	NA
	09/13/18	200.7/200.8	0.00098	0.018	<0.002	<0.006	<0.006	<0.02	<0.0005	0.0024	<0.001	0.008	0.0079
	09/20/17	200.7/200.8	0.0011	0.018	<0.002	<0.006	<0.006	<0.02	<0.0005	0.0028	0.00081	NA	<0.01
	09/07/16	200.7/200.8	0.0011	0.02	<0.002	<0.006	<0.006	<0.02	<0.0005	0.0031	0.0006	0.0095	<0.01
	08/14/15	200.7/200.8	*<0.01**	0.017	<0.002	<0.006	<0.006	<0.02	<0.0025	0.0021	<0.01	0.0091	<0.01
	09/16/14	200.7/200.8	0.0012	0.017	<0.002	<0.006	<0.006	<0.02	<0.001	0.0026	<0.001	0.0093	0.026
	09/10/13	200.7/200.8	<0.001	0.02	<0.002	<0.006	<0.006	<0.02	<0.001	0.0051	<0.001	0.0095	<0.01
	08/24/12	200.7/200.8	<0.001	0.018	<0.002	<0.006	<0.006	<0.02	<0.005	0.003	<0.001	0.009	0.019
	10/10/11	200.7/200.8	<0.001	0.019	<0.002	<0.006	<0.006	<0.02	<0.005	0.007	<0.001	0.0093	<0.01
MW-4	08/13/19	200.7/200.8	0.00078	0.021	<0.002	<0.006	<0.006	<0.02	<0.0005	0.0052	<0.001	0.014	0.0066
	12/06/18 [1]	--	NA	NA	NA	NA	NA	NA	NA	NA	NA	NA	NA
	09/13/18	200.7/200.8	0.00072	0.021	<0.002	<0.006	<0.006	<0.02	<0.0005	0.0064	<0.001	0.014	0.011
	09/21/17	200.7/200.8	0.00087	0.02	<0.002	<0.006	<0.006	<0.02	<0.0005	0.0052	0.00088	NA	0.011
	09/07/16	200.7/200.8	0.00089	0.02	<0.002	<0.006	<0.006	<0.02	<0.0005	0.0046	0.00072	0.017	<0.01
	08/17/15	200.7/200.8	*<0.01**	0.021	<0.002	<0.006	<0.006	<0.02	<0.0025	0.0051	<0.01	0.016	0.036
	09/17/14	200.7/200.8	<0.001	0.018	<0.002	<0.006	<0.006	<0.02	<0.001	0.0057	<0.001	0.017	<0.01
	09/10/13	200.7/200.8	<0.001	0.022	<0.002	<0.006	<0.006	<0.02	<0.001	0.0057	<0.001	0.018	0.017
	08/21/12	200.7/200.8	<0.001	0.019	<0.002	<0.006	<0.006	<0.02	<0.005	0.0031	<0.001	0.016	0.033
	10/12/11	200.7/200.8	<0.001	0.021	<0.002	<0.006	<0.006	<0.02	<0.005	0.0058	<0.001	0.017	0.1

8.2.3 MW-1, MW-2, MW-4, MW-5
Dissolved Metals Analytical Result Summary

STANDARDS			PARAMETERS										
			Arsenic (mg/L)	Barium (mg/L)	Cadmium (mg/L)	Chromium (mg/L)	Copper (mg/L)	Iron (mg/L)	Lead (mg/L)	Manganese (mg/L)	Selenium (mg/L)	Uranium (mg/L)	Zinc (mg/L)
WQCC 20 NMAC 6.2.3103 (DEC 2018)			**0.01**	**2.0**	**0.005**	**0.05**	**1.0**	**1.0**	**0.015**	**0.2**	**0.05**	**0.03**	**10.0**
40 CFR 141.62 MCL			0.01	2.0	0.005	0.1	1.3	NE	0.015	NE	0.05	0.03	NE
NMED TAP WATER (Rev 2. JUN 2019)			0.000855	3.28	0.00624	0.0057	0.7898	13.8	NE	2.02	0.0987	0.0592	5.96
EPA RSL for Tap Water (NOV 2019)			0.000052	3.80	0.0092	NE	0.8	14	0.015	0.43	0.1	0.004	6
WELL ID	**DATE SAMPLED**	**METHOD**											
MW-5	08/14/19	200.7/200.8	0.00098	0.016	<0.002	<0.006	<0.006	<0.02	<0.0005	0.0037	<0.001	0.0078	0.006
	12/06/18 [1]	--	NA	NA	NA	NA	NA	NA	NA	NA	NA	NA	NA
	09/17/18	200.7/200.8	0.00093	0.017	<0.002	<0.006	<0.006	<0.02	<0.0005	0.0039	<0.001	0.0075	0.011
	09/11/17	200.7/200.8	0.0012	0.017	<0.002	<0.006	<0.006	<0.02	<0.0005	0.0042	0.0012	0.0095	0.029
	09/07/16	200.7/200.8	0.0010	0.017	<0.002	<0.006	<0.006	<0.02	<0.0005	0.0035	0.0005	0.0094	<0.01
	08/14/15	200.7/200.8	*<0.01**	0.017	<0.002	<0.006	<0.006	<0.02	<0.0025	0.0032	<0.01	0.0091	<0.01
	09/17/14	200.7/200.8	0.0012	0.015	<0.002	<0.006	<0.006	<0.02	<0.001	0.0045	<0.001	0.0094	0.025
	09/10/13	200.7/200.8	0.001	0.018	<0.002	<0.006	<0.006	<0.02	<0.001	0.0034	<0.001	0.01	0.012
	08/23/12	200.7/200.8	<0.001	0.016	<0.002	<0.006	<0.006	<0.02	<0.005	0.0029	<0.001	0.0091	<0.01
	10/10/11	200.7/200.8	0.0011	0.016	<0.002	<0.006	<0.006	<0.02	<0.005	0.0044	<0.001	0.0095	0.12

DEFINITIONS

NA = Not analyzed; NE = Not established

Bold and highlighted values represent values above the applicable standards

STANDARDS

WQCC 20 NMAC 6.2.3103 - Standards for Ground Water of 10,000 mg/l TDS Concentration or Less.

a) Human Health Standards; b) Other Standards for Domestic Water

40 CFR 141.62 Maximum Contaminant Levels for Inorganic Contaminants

NMED Risk Assessment Guidance for Investigations and Remediations Table A-1

EPA Regional Screening Level (RSL) Summary Table

NOTES

Items notes with a * and italics have a detection limit greater than or equal to the applicable standard.

1) RCRA Post Closure Sampling Event

8.2.4 MW-1, MW-2, MW-4, MW-5
Volatile and Semi-Volatile Organic Compound Analytical Result Summary

STANDARDS			PARAMETERS							
			Acetone (mg/L)	Benzoic Acid (mg/L)	Bis (2-ethylhexyl) phthalate (mg/L)	Di-n-octylphthalate (mg/L)	Diethyl phthalate (mg/L)	Dimethyl phthalate (mg/L)	Methylene Chloride (mg/L)	Pyrene (mg/L)
WQCC 20 NMAC 6.2.3103 (DEC 2018)			NE	NE	NE	NE	NE	NE	**0.005**	NE
40 CFR 141.61 MCL			NE	NE	**0.006**	NE	NE	NE	0.005	NE
NMED TAP WATER (Rev 2. JUN 2019)			**14.06**	NE	0.0556	NE	**14.8**	**0.612**	0.106	**0.117**
EPA RSL for Tap Water (NOV 2019)			14	**75**	0.0056	**0.2**	15	NE	0.011	0.12
WELL ID	**DATE SAMPLED**	**METHOD**								
MW-1	08/12/19	8260/8270C	<0.01	<0.02	*<0.01**	<0.01	<0.01	<0.01	<0.003	
	12/06/18 [2]	8260B/8270C	0.0036	NA	<0.0005	<0.0005	<0.0005	<0.0005	<0.003	<0.0005
	09/13/18	8260B/8270C	<0.01	0.0066	*<0.01**	<0.01	<0.01	<0.01	0.00041	
	09/20/17	8260B/8270C	0.0044	<0.02	*<0.01**	<0.01	<0.01	<0.01		
	09/07/16	8260B/8270C	<0.01	0.0098	0.004	0.0044	<0.01	0.0051		
	08/14/15	8260B/8270C	<0.01		*<0.01**		<0.01			
	09/16/14	8260B/8270C	<0.01		*<0.01**		<0.01			
	09/09/13	8260B/8270C	<0.01		*<0.01**		<0.01			
	08/24/12	8260B/8270C	<0.01		*<0.01**		<0.01			
	10/06/11	8260B	<0.01		NL		NA			
	07/16/10	8260B/8270C	<0.01		<0.005		0.0010			
	03/01/10 [1]	8260B/8270C	<0.0025		<0.005		NA			
MW-2	08/13/19	8260/8270C	<0.01	<0.02	*<0.01**	<0.01	<0.01	<0.01		<0.01
	12/06/18 [2]	8260B/8270C	0.0092	NA	<0.0005	<0.0005	<0.0005	<0.0005	<0.003	<0.0005
	09/13/18	8260B/8270C	<0.01	0.0068	*<0.01**	<0.01	<0.01	<0.01	<0.003	<0.01
	09/20/17	8260B/8270C	0.0043	0.0073	0.006	<0.01	<0.01	<0.01		<0.01
	09/07/16	8260B/8270C	<0.01	0.018	0.0038	0.0035	<0.01	0.005		0.0052
	08/14/15	8260B/8270C	<0.01		*<0.01**		<0.01			
	09/16/14	8260B/8270C	<0.01		*<0.01**		<0.01			
	09/10/13	8260B/8270C	<0.01		*<0.01**		<0.01			
	08/24/12	8260B/8270C	<0.01		*<0.01**		<0.01			
	10/10/11	8260B	<0.01		NA		NA			
	03/01/10 [1]	8260B/8270C	0.0027		<0.005		<0.01			
MW-4	08/13/19	8260/8270C	<0.01	<0.02	*<0.01**	<0.01	<0.01	<0.01		<0.01
	12/06/18 [2]	8260B/8270C	0.0037	NA	<0.0005	<0.0005	<0.0005	<0.0005	<0.003	<0.0005
	09/13/18	8260B/8270C	<0.01	0.0065	*<0.01**	<0.01	<0.01	<0.01	<0.003	<0.01
	09/21/17	8260B/8270C	0.0037	0.014	0.0051	<0.01	<0.01	<0.01		<0.01
	09/07/16	8260B/8270C	<0.01	0.0093	0.0035	0.0037	<0.01	0.0045		0.0032
	08/17/15	8260B/8270C	<0.01		*<0.01**		<0.01			
	09/17/14	8260B/8270C	<0.01		*<0.01**		<0.01			
	09/10/13	8260B/8270C	<0.01		*<0.01**		<0.01			
	08/21/12	8260B/8270C	<0.01		*<0.01**		<0.01			
	10/12/11	8260B	<0.01		NA		NA			
	07/19/10	8260B/8270C	<0.01		<0.005		<0.01			
	03/01/10 [1]	8260B/8270C	<0.0025		<0.005		<0.01			

8.2.4 MW-1, MW-2, MW-4, MW-5
Volatile and Semi-Volatile Organic Compound Analytical Result Summary

STANDARDS			PARAMETERS							
			Acetone (mg/L)	Benzoic Acid (mg/L)	Bis (2-ethylhexyl) phthalate (mg/L)	Di-n-octylphthalate (mg/L)	Diethyl phthalate (mg/L)	Dimethyl phthalate (mg/L)	Methylene Chloride (mg/L)	Pyrene (mg/L)
WQCC 20 NMAC 6.2.3103 (DEC 2018)			NE	NE	NE	NE	NE	NE	**0.005**	NE
40 CFR 141.61 MCL			NE	NE	**0.006**	NE	NE	NE	0.005	NE
NMED TAP WATER (Rev 2. JUN 2019)			**14.06**	NE	0.0556	NE	**14.8**	**0.612**	0.106	**0.117**
EPA RSL for Tap Water (NOV 2019)			14	**75**	0.0056	**0.2**	15	NE	0.011	0.12
WELL ID	**DATE SAMPLED**	**METHOD**								
MW-5	08/14/19	8260/8270C	<0.01	<0.02	0.018	<0.01	<0.01	<0.01		
	12/06/18 [2]	8260B/8270C	<0.010	NA	0.00112	<0.0005	<0.0005	<0.0005	<0.003	<0.0005
	09/17/18	8260B/8270C	0.00099	0.007	*<0.01**	<0.01	<0.01	<0.01	<0.003	
	09/11/17	8260B/8270C	0.005	<0.02	0.0057	<0.01	<0.01	<0.01		
	09/07/16	8260B/8270C	<0.01	0.0065	0.0033	0.0034	<0.01	0.0051		
	08/14/15	8260B/8270C	<0.01		*<0.01**		<0.01			
	09/17/14	8260B/8270C	<0.01		*<0.01**		<0.01			
	09/10/13	8260B/8270C	<0.01		*<0.01**		<0.01			
	08/23/12	8260B/8270C	<0.01		*<0.01**		<0.01			
	10/10/11	8260B	<0.01		NA		NA			
	07/19/10	8260B/8270C	<0.01		<0.005		<0.01			
	3/1/2010 [1]	8260B/8270C	0.0034		<0.005		NA			

DEFINITIONS
NA = Not analyzed; NE = Not established
Bold and highlighted values represent values above the applicable standards
STANDARDS
WQCC 20 NMAC 6.2.3103 - Standards for Ground Water of 10,000 mg/l TDS Concentration or Less.
a) Human Health Standards; b) Other Standards for Domestic Water
40 CFR 141.61 Maximum Contaminant Levels for Organic Contaminants
NMED Risk Assessment Guidance for Investigations and Remediations Table A-1
EPA Regional Screening Level (RSL) Summary Table
NOTES
Items notes with a * and italics have a detection limit greater than or equal to the applicable standard.
1) RCRA Post Closure Sampling Event
2) RCRA Post Closure Sampling Event

8.3 SMW-2, SMW-4
BTEX and MTBE Analytical Result Summary

STANDARDS			PARAMETERS				
			Benzene (mg/L)	Toluene (mg/L)	Ethylbenzene (mg/L)	Total Xylenes (mg/L)	MTBE (mg/L)
WQCC 20NMAC 6.2.3103 (DECEMBER 2018)			**0.005**	**1**	**0.7**	**0.62**	**0.1**
40 CFR 141.61 MCL			0.005	1.0	0.7	10	NE
NMED TAP WATER (Rev 2. JUN 2019)			0.00455	1.09	0.0149	0.193	0.143
EPA RSL for Tap Water (NOV 2019)			0.00046	1.1	0.0015	0.19	0.14
WELL ID	**DATE SAMPLED**	**METHOD**					
SMW-2	08/22/19	8260B	0.00023	<0.001	<0.001	<0.0015	0.012
	09/18/18	8260B	<0.001	<0.001	<0.001	<0.0015	0.011
	09/11/17	8260B	<0.001	<0.001	<0.001	<0.0015	0.011
	09/09/16	8260B	<0.001	<0.001	<0.001	<0.0015	0.013
	08/18/15	8260B	<0.001	<0.001	<0.001	<0.0015	0.011
	09/11/14	8260B	<0.001	<0.001	<0.001	<0.0015	0.012
	09/09/13	8260B	<0.001	<0.001	<0.001	<0.0015	0.0097
	08/23/12	8260B	<0.01	<0.01	<0.01	<0.015	0.012
	10/12/11	8260B	<0.001	<0.001	<0.001	<0.0015	0.0079
	07/16/10	8260B	<0.001	<0.001	<0.001	<0.0015	0.0088
SMW-4	08/13/19	8260B	<0.001	<0.001	<0.001	<0.0015	<0.001
	12/06/18 [1]	8260B	<0.001	<0.001	<0.001	<0.0015	<0.001
	09/12/18	8260B	<0.001	<0.001	<0.001	<0.0015	<0.001
	09/11/17	8260B	<0.001	<0.001	<0.001	<0.0015	<0.001
	09/07/16	8260B	<0.001	<0.001	<0.001	<0.0015	<0.001
	08/14/15	8260B	<0.001	<0.001	<0.001	<0.0015	<0.001
	09/11/14	8260B	<0.001	<0.001	<0.001	<0.0015	<0.001
	09/09/13	8260B	<0.001	<0.001	<0.001	<0.0015	<0.001
	08/24/12	8260B	<0.001	<0.001	<0.001	<0.0015	<0.001
	10/10/11	8260B	<0.001	<0.001	<0.001	<0.0015	<0.001
	07/16/10	8260B	<0.001	<0.001	<0.001	<0.0015	<0.001

DEFINITIONS

NA = Not analyzed; NE = Not established

Bold and highlighted values represent values above the applicable standards

STANDARDS

WQCC 20 NMAC 6.2.3103 - Standards for Ground Water of 10,000 mg/l TDS Concentration or Less.

a) Human Health Standards; b) Other Standards for Domestic Water

40 CFR 141.61 Maximum Contaminant Levels for Organic Contaminants

NMED Risk Assessment Guidance for Investigations and Remediations Table A-1

EPA Regional Screening Level (RSL) Summary Table

NOTES

(1) RCRA Post Closure Sampling Event

8.3.1 SMW-2, SMW-4

General Chemistry and DRO/GRO/MRO Analytical Result Summary

STANDARDS			PARAMETERS							
			Fluoride (mg/L)	Chloride (mg/L)	Nitrite (mg/L)	Nitrate (mg/L)	Sulfate (mg/L)	DRO (mg/L)	GRO (mg/L)	MRO (mg/L)
WQCC 20NMAC 6.2.3103 (DECEMBER 2018)			**1.6**	**250.0**	**1**	**10**	**600.0**	NE	NE	NE
40 CFR 141.61 MCL			4.0	NE	1	10	NE	NE	NE	NE
NMED TAP WATER (Rev 2. JUN 2019)			1.18	NE	1.97	31.60	NE	NE	NE	NE
EPA RSL for Tap Water (NOV 2019)			0.8	NE	2	32	NE	NE	NE	NE
NMED SSG (JUNE 2019)			NE	NE	NE	NE	NE	**0.0167**	**0.0101**	**0.0858**
WELL ID	**DATE SAMPLED**	**METHOD**								
SMW-2	08/22/19	300.0/8015D	0.093	**2900**	**3.3**	<0.5	**1400**	**1.1**	**0.21**	*<5.0**
	09/18/18	300.0/8015D	<0.5	**2900**	*<2.0**	<2.0	**1500**	*<1.0**	**0.25**	*<5.0**
	09/11/17	300.0/8015D	<0.5	**2900**	*<2.0**	<2.0	**1400**	**0.41**	**0.23**	*<5.0**
	09/09/16	300.0/8015D	<0.1	**2500**	*<2.0**	<2.0	**1300**	*<1.0**	**1.0**	*<5.0**
	08/18/15	300.0/8015D	<2.1	**3000**	*<4.0**	<4.0	**1601**	*<1.1**	**1.78**	*<5.1**
	09/11/14	300.0/8015D	<2.0	**2500**	*<2.0**	<2.0	**1400**	*<1.0**	**0.23**	*<5.0**
	09/09/13	300.0/8015D	<0.1	**2500**	*<4.0**	<4.0	**1500**	*<1.0**	**0.15**	*<5.0**
	08/23/12	300.0/8015D	0.16	**2400**	*<2.0**	<2.0	**1600**	*<1.0**	**0.28**	*<5.0**
	10/12/11	300.0/8015D	0.22	**2600**	*<10**	*<10**	**1600**	*<1.0**	**0.36**	*<5.0**
	07/16/10	8015D	NA	NA	NA	NA	NA	*<1.0**	*<0.05**	

8.3.1 SMW-2, SMW-4

General Chemistry and DRO/GRO/MRO Analytical Result Summary

STANDARDS			PARAMETERS							
			Fluoride (mg/L)	Chloride (mg/L)	Nitrite (mg/L)	Nitrate (mg/L)	Sulfate (mg/L)	DRO (mg/L)	GRO (mg/L)	MRO (mg/L)
WQCC 20NMAC 6.2.3103 (DECEMBER 2018)			**1.6**	**250.0**	**1**	**10**	**600.0**	NE	NE	NE
40 CFR 141.61 MCL			4.0	NE	1	10	NE	NE	NE	NE
NMED TAP WATER (Rev 2. JUN 2019)			1.18	NE	1.97	31.60	NE	NE	NE	NE
EPA RSL for Tap Water (NOV 2019)			0.8	NE	2	32	NE	NE	NE	NE
NMED SSG (JUNE 2019)			NE	NE	NE	NE	NE	**0.0167**	**0.0101**	**0.0858**
WELL ID	**DATE SAMPLED**	**METHOD**								
SMW-4	08/13/19	300.0/8015D	1	59	<0.5	0.11	170	*<1.0**	*<0.05**	*<5.0**
	12/06/18 [2]	8015D	NA	NA	NA	NA	NA	*<1.0**	*<0.05**	*<5.0**
	09/12/18	300.0/8015D	0.97	59	<0.5	0.12	160	*<1.0**	*<0.05**	*<5.0**
	09/11/17	300.0/8015D	0.96	56	0.35	0.35	160	*<1.0**	*<0.05**	*<5.0**
	09/07/16	300.0/8015D	1.0	53	*<1.0**	<1.0	150	*<1.0**	**0.028**	*<5.0**
	08/14/15	300.0/8015D	1.0	55	*<1.0**	<1.0	160	*<1.0**	*<0.05**	*<5.0**
	09/11/14	300.0/8015D	1.1	53	*<1.0**	<1.0	150	*<1.0**	*<0.05**	*<5.0**
	09/09/13	300.0/8015D	0.93	59	*<1.0**	<1.0	170	*<1.0**	*<0.05**	*<5.0**
	08/24/12	300.0/8015D	1.0	58	*<1.0**	<1.0	150	*<1.0**	*<0.05**	*<5.0**
	10/10/11	300.0/8015D	1.1	58	**1.3**	1.3	170	*<1.0**	*<0.05**	*<5.0**
	07/16/10	8015D	NA	NA	NA	NA	NA	*<1.0**	*<0.05**	
	03/01/10 [1]	8015D	NA	NA	NA	NA	NA	*<1.0**	*<0.05**	

DEFINITIONS

NA = Not analyzed; NE = Not established

Bold and highlighted values represent values above the applicable standards

STANDARDS

WQCC 20 NMAC 6.2.3103 - Standards for Ground Water of 10,000 mg/l TDS Concentration or Less.

a) Human Health Standards; b) Other Standards for Domestic Water

40 CFR 141.62 Maximum Contaminant Levels for Inorganic Contaminants

NMED Risk Assessment Guidance for Investigations and Remediations Table A-1

EPA Regional Screening Level (RSL) Summary Table

NMED Soil Screening Guidance Volume 1, Table 6-4 (groundwater)

NOTES

Items notes with a * and italics have a detection limit greater than or equal to the applicable standard.

1) RCRA Post Closure Sampling Event

2) RCRA Post Closure Sampling Event

8.3.2 SMW-2, SMW-4
Total Metals Analytical Result Summary

STANDARDS			PARAMETERS															
			Arsenic (mg/L)	Barium (mg/L)	Cadmium (mg/L)	Chromium (mg/L)	Cobalt (mg/L)	Copper (mg/L)	Iron (mg/L)	Lead (mg/L)	Manganese (mg/L)	Nickel (mg/L)	Selenium (mg/L)	Cyanide (mg/L)	Mercury (ug/L)	Uranium (mg/L)	Vanadium (mg/L)	Zinc (mg/L)
WQCC 20NMAC 6.2.3103 (DECEMBER 2018)			**0.01**	**2.0**	**0.005**	**0.05**	**0.05**	**1.0**	**1.0**	**0.015**	**0.2**	**0.2**	**0.05**	**0.2**	**2**	**0.03**	NE	**10**
40 CFR 141.61 MCL			0.01	2.0	0.005	0.1	NE	1.3	NE	0.015	NE	NE	0.05	0.2	2	0.03	NE	NE
NMED TAP WATER (Rev 2. JUN 2019)			0.000855	3.28	0.00624	0.0057	0.005979	0.7898	13.8	NE	2.02	0.3719	0.0987	0.00146	0.626	0.0592	**0.06307**	5.96
EPA RSL for Tap Water (NOV 2019)			0.000052	3.80	0.0092	22	0.006	0.8	14	0.015	0.43	0.39	0.1	0.0015	0.63	0.004	0.086	6
WELL ID	DATE SAMPLED	METHOD																
SMW-2	08/22/19	200.7/200.8	0.0026	0.023	<0.002	0.047		<0.006	0.52	0.00059	**37**		<0.005	0.0374	0.094	**0.092**		<0.01
	09/18/18	200.7/200.8	0.0056	0.03	<0.002	0.026		<0.006	0.76	<0.0025	**0.34**		<0.005	0.0326	0.06	**0.091**		0.0065
	09/11/17	200.7/200.8	0.0092	0.082	<0.002	**0.39**		0.0042	**4**	0.0027	**0.49**		0.024	0.036	<0.2	**0.12**		0.008
	09/09/16	200.7/200.8	**0.011**	0.042	<0.002	**0.13**		<0.006	**1.4**	0.0013	**0.3**		0.016	0.041	0.096	**0.11**		0.011
	08/18/15	200.7/200.9	*<0.02**	1.018	<0.003	0.0071		<0.007	0.26	<0.006	**0.33**		<0.02	0.045	<0.3	**0.12**		<0.02
	09/11/14	200.7/200.8	*<0.01**	0.013	<0.002	<0.006		<0.006	0.052	<0.001	**0.28**		0.019	0.0456	<0.2	**0.11**		<0.01
	09/09/13	200.7/200.8	*<0.01**	0.028	<0.002	0.029		<0.006	0.66	<0.01	**0.27**		<0.01	0.0406	<0.2	**0.11**		0.011
	08/23/12	200.7/200.8	0.005	0.038	<0.002	**0.17**		<0.006	**1.5**	<0.005	**0.25**		0.0072	NA	<0.2	**0.11**		0.021
	10/12/11	200.7/200.8	0.0052	0.031	<0.002	**0.11**		<0.006	0.68	<0.005	0.16		0.011	NA	<0.2	**0.12**		<0.01
	07/16/10	6010B	0.0035	0.022	<0.002	**0.093**				<0.005			<0.001	0.0525	<0.2			<0.02
SMW-4	08/13/19	200.7/200.8	0.0034	0.027	<0.002	0.017		<0.006	0.71	0.00037	**0.022**		<0.001	<0.005	0.054	0.03		0.0058
	12/06/18 [2]	6010B/6020	0.0029	0.032	<0.002	0.011	0.019	NA	NA	0.001	NA	0.0095	0.00053	<0.01	0.091	NA	0.05	0.0072
	09/12/18	200.7/200.8	0.0031	0.027	<0.002	0.017		<0.006	0.71	0.00088	0.022		<0.001	<0.005	<0.2	0.03		0.0058
	09/11/17	200.7/200.8	0.0032	0.065	<0.002	**0.06**		0.0035	**3.1**	0.0032	0.068		0.00097	<0.005	<0.2	**0.033**		0.016
	09/07/16	200.7/200.8	0.0030	0.043	<0.002	0.036		0.0099	**1.6**	0.0017	0.035		0.00096	<0.01	0.058	**0.031**		0.011
	08/14/15	200.7/200.8	0.0030	0.028	<0.002	0.0078		<0.006	0.32	0.00053	0.01		<0.001	<0.01	<0.2	**0.036**		<0.01
	09/11/14	200.7/200.8	0.0034	0.024	<0.002	<0.006		<0.006	0.35	<0.001	0.012		0.0013	<0.01	<0.2	**0.037**		<0.01
	09/09/13	200.7/200.8	0.0025	0.021	<0.002	0.025		<0.006	0.15	<0.001	0.005		<0.001	<0.01	<0.2	**0.031**		0.012
	08/24/12	200.7/200.8	0.0033	0.019	<0.002	<0.006		<0.006	0.13	<0.005	0.0046		<0.0025	NA	<0.2	**0.033**		<0.01
	10/10/11	200.7/200.8	0.0029	0.037	<0.002	**0.058**		<0.006	0.94	<0.005	0.029		<0.0025	NA	<0.2	**0.037**		0.012
	07/16/10	6010B	0.0033	0.027	<0.002	<0.006				<0.005			<0.001	<0.01	<0.2			<0.02
	03/01/10 [1]	6010B	<0.005	0.035	<0.002	0.0082				<0.005			<0.005	<0.01	<0.2			<0.02

DEFINITIONS

NA = Not analyzed; NE = Not established

Bold and highlighted values represent values above the applicable standards

STANDARDS

WQCC 20 NMAC 6.2.3103 - Standards for Ground Water of 10,000 mg/l TDS Concentration or Less.

a) Human Health Standards; b) Other Standards for Domestic Water

40 CFR 141.62 Maximum Contaminant Levels for Inorganic Contaminants

NMED Risk Assessment Guidance for Investigations and Remediations Table A-1

EPA Regional Screening Level (RSL) Summary Table

NOTES

Items notes with a * and italics have a detection limit greater than or equal to the applicable standard.

1) RCRA Post Closure Sampling Event

2) RCRA Post Closure Sampling Event

8.3.3 SMW-2, SMW-4
Dissolved Metals Analytical Result Summary

STANDARDS			PARAMETERS										
			Arsenic (mg/L)	Barium (mg/L)	Cadmium (mg/L)	Chromium (mg/L)	Copper (mg/L)	Iron (mg/L)	Lead (mg/L)	Manganese (mg/L)	Selenium (mg/L)	Uranium (mg/L)	Zinc (mg/L)
WQCC 20NMAC 6.2.3103 (DECEMBER 2018)			**0.01**	**2.0**	**0.005**	**0.05**	**1.0**	**1.0**	**0.015**	**0.2**	**0.05**	**0.03**	**10**
40 CFR 141.62 MCL			0.01	2.0	0.005	0.1	1.3	NE	0.015	NE	0.05	0.03	NE
NMED TAP WATER (Rev 2. JUN 2019)			0.000855	3.28	0.00624	0.0057	0.7898	13.8	NE	2.02	0.0987	0.0592	5.96
EPA RSL for Tap Water (NOV 2019)			0.000052	3.80	0.0092	22	0.8	14	0.015	0.43	0.1	0.004	6
WELL ID	**DATE SAMPLED**	**METHOD**											
SMW-2	08/22/19	200.7/200.8	0.0026	0.014	<0.002	<0.006	0.0037	0.026	<0.0025	**0.36**	<0.005	**0.11**	<0.01
	09/18/18	200.7/200.8	0.0041	0.014	<0.002	<0.006	<0.006	0.031	<0.0025	**0.33**	<0.005	**0.099**	0.0065
	09/11/17	200.7/200.8	0.0098	0.016	<0.002	0.0014	<0.006	0.054	<0.0025	**0.31**	0.024	**0.12**	0.033
	09/09/16	200.7/200.8	0.0066	0.018	<0.002	<0.006	<0.006	0.032	<0.0005	**0.24**	0.015	**0.11**	0.005
	08/18/15	200.7/200.9	*<0.02**	0.015	<0.003	<0.006	<0.006	0.022	<0.0026	**0.31**	<0.02	**0.12**	0.024
	09/11/14	200.7/200.8	*<0.01**	0.015	<0.002	<0.006	<0.006	0.049	*<0.02**	**0.27**	0.021	**0.11**	<0.01
	09/09/13	200.7/200.8	0.0055	0.016	<0.002	<0.006	<0.006	0.028	<0.01	0.17	0.011	**0.1**	0.014
	08/23/12	200.7/200.8	<0.005	0.016	<0.002	<0.006	<0.006	0.042	<0.005	**0.22**	0.0072	**0.1**	0.029
	10/12/11	200.7/200.8	0.0064	0.016	<0.002	<0.006	<0.006	<0.1	<0.005	**0.24**	0.015	**0.11**	0.11
SMW-4	08/13/19	200.7/200.8	0.0031	0.017	<0.002	0.0026	<0.006	<0.02	<0.0005	0.00056	<0.001	**0.031**	0.0075
	12/06/18 [2]	--	NA	NA	NA	NA	NA	NA	NA	NA	NA	NA	NA
	09/12/18	200.7/200.8	0.0029	0.019	<0.002	0.0042	<0.006	0.079	<0.0005	0.0042	<0.001	0.029	0.0094
	09/11/17	200.7/200.8	0.0032	0.023	<0.002	0.0043	<0.006	0.12	0.00059	0.01	<0.005	**0.031**	0.046
	09/07/16	200.7/200.8	0.0030	0.019	<0.002	0.0028	<0.006	0.078	0.0021	0.0064	0.0011	**0.032**	0.0029
	08/14/15	200.7/200.8	*<0.01**	0.02	<0.002	<0.006	<0.006	<0.02	<0.0025	<0.002	<0.01	**0.035**	<0.01
	09/11/14	200.7/200.8	0.0033	0.021	<0.002	<0.006	<0.006	0.041	<0.01	0.0033	0.0013	**0.033**	<0.01
	09/09/13	200.7/200.8	0.0026	0.021	<0.002	0.012	<0.006	<0.02	<0.001	<0.002	<0.001	**0.031**	<0.01
	08/24/12	200.7/200.8	0.0028	0.016	<0.002	<0.006	<0.006	<0.02	<0.005	<0.002	<0.001	0.03	<0.01
	10/10/11	200.7/200.8	0.003	0.02	<0.002	0.0092	<0.006	0.035	<0.005	0.0041	0.0011	**0.032**	0.13

DEFINITIONS

NA = Not analyzed; NE = Not established

Bold and highlighted values represent values above the applicable standards

STANDARDS

WQCC 20 NMAC 6.2.3103 - Standards for Ground Water of 10,000 mg/l TDS Concentration or Less.

a) Human Health Standards; b) Other Standards for Domestic Water

40 CFR 141.62 Maximum Contaminant Levels for Inorganic Contaminants

NMED Risk Assessment Guidance for Investigations and Remediations Table A-1

EPA Regional Screening Level (RSL) Summary Table

NOTES

Items notes with a * and italics have a detection limit greater than or equal to the applicable standard.

1) RCRA Post Closure Sampling Event

2) RCRA Post Closure Sampling Event

8.3.4 SMW-2, SMW-4

Volatile and Semi-Volatile Organic Compound Analytical Result Summary

			PARAMETERS								
STANDARDS			Acetone (mg/L)	Benzoic Acid (mg/L)	bis(2-Ethylhexyl) phthalate (mg/L)	Di-n-octyl phthalate (mg/L)	Diethyl phthalate (mg/L)	Dimethyl phthalate (mg/L)	Phenol (mg/L)	Pyrene (mg/L)	1-4 Dioxane (mg/L)
WQCC 20NMAC 6.2.3103 (DECEMBER 2018)			NE	NE	NE	NE	NE	NE	**0.005**	NE	NE
40 CFR 141.61 MCL			NE	NE	**0.006**	NE	NE	NE	NE	NE	NE
NMED TAP WATER (Rev 2. JUN 2019)			**14.06**	NE	0.0556	NE	**14.8**	**0.612**	5.76	**0.117**	**0.00459**
EPA RSL for Tap Water (NOV 2019)			14	**75**	0.0056	**0.2**	15	NE	5.8	0.12	0.00046
WELL ID	**DATE SAMPLED**	**METHOD**									
SMW-2	08/22/19	8260B/8270C	<0.01	<0.02	*<0.01**	<0.01	<0.01	<0.01	*<0.01**	<0.01	NA
	09/18/18	8260B/8270C	0.0067	<0.02	*<0.01**	<0.01	<0.01	<0.01	*<0.01**	<0.01	
	09/11/17	8260B/8270C	0.0062	<0.01	*<0.01**	<0.01	<0.01	<0.01	*<0.01**	<0.01	
	09/09/16	8260B/8270C	<0.01	0.0069	**0.007**	0.0033	<0.01	0.003	*<0.01**	0.0046	
	08/18/15	8260B/8270C	<0.01		*<0.01**		<0.01		*<0.01**		
	09/11/14	8260B/8270C	<0.01		*<0.011**		<0.011		*<0.11**		
	09/09/13	8260B/8270C	<0.01		*<0.01**		<0.01		*<0.01**		
	08/23/12	8260B/8270C	<0.1		*<0.01**		<0.01		*<0.01**		
	10/12/11	8260B	<0.01		NA		NA		NA		
	07/16/10	8260B/8270C	<0.01		<0.0001		0.0019		<0.001		
SMW-4	08/13/19	8260B/8270C	0.0045	<0.02	*<0.01**	<0.01	<0.01	<0.01	*<0.01**	<0.01	NA
	12/06/18 [2]	8260B/8270C	0.0029	NA	<0.0005	<0.0005	<0.0005	<0.0005	<0.0005	<0.0005	**0.0086**
	09/12/18	8260B/8270C	0.0045	0.0064	*<0.01**	<0.01	<0.01	<0.01	*<0.01**		
	09/11/17	8260B/8270C	0.0039	0.033	**0.034**	<0.05	<0.05	<0.05	*<0.05**		
	09/07/16	8260B/8270C	<0.01	0.0099	0.0038	0.0049	<0.01	0.0054	*<0.01**		
	08/14/15	8260B/8270C	<0.01		*<0.01**		<0.01		*<0.01**		
	09/11/14	8260B/8270C	<0.01		*<0.01**		<0.01		*<0.01**		
	09/09/13	8260B/8270C	<0.01		*<0.01**		<0.01		*<0.01**		
	08/24/12	8260B/8270C	<0.01		*<0.01**		<0.01		*<0.01**		
	10/10/11	8260B	<0.01		NA		NA		NA		
	07/16/10	8260B/8270C	<0.01		<0.0001		<0.0001		<0.001		
	03/01/10 [1]	8260B/8270C	<0.0025		<0.005		<0.01		*<0.01**		

DEFINITIONS

NA = Not analyzed; NE = Not established

Bold and highlighted values represent values above the applicable standards

STANDARDS

WQCC 20 NMAC 6.2.3103 - Standards for Ground Water of 10,000 mg/l TDS Concentration or Less.

a) Human Health Standards; b) Other Standards for Domestic Water

40 CFR 141.61 Maximum Contaminant Levels for Organic Contaminants

NMED Risk Assessment Guidance for Investigations and Remediations Table A-1

EPA Regional Screening Level (RSL) Summary Table

NOTES

Items notes with a * and italics have a detection limit greater than or equal to the applicable standard.

1) RCRA Post Closure Sampling Event

2) RCRA Post Closure Sampling Event

8.4 OW-11, OW-12

BTEX and MTBE Analytical Result Summary

STANDARDS			PARAMETERS				
			Benzene (mg/L)	Toluene (mg/L)	Ethylbenzene (mg/L)	Total Xylenes (mg/L)	MTBE (mg/L)
WQCC 20 NMAC 6.2.3103 (DEC 2018)			**0.005**	**1**	**0.7**	**0.62**	**0.1**
40 CFR 141.61 MCL			0.005	1.0	0.7	10	NE
NMED TAP WATER (JUNE 2019)			0.00455	1.09	0.0149	0.193	0.143
EPA RSL for Tap Water (NOV 2019)			0.0046	1.1	0.0015	0.19	0.14
WELL ID	**DATE SAMPLED**	**METHOD**					
OW-11	08/20/19	8260B	0.00048	<0.001	0.00041	<0.0015	<0.001
	09/18/18	8260B	<0.001	<0.001	<0.001	<0.0015	<0.001
	09/18/17	8260B	<0.001	<0.001	<0.001	<0.0015	<0.001
	09/09/16	8260B	<0.001	<0.001	<0.001	<0.0015	<0.001
	08/17/15	8260B	<0.001	<0.001	<0.001	<0.0015	<0.001
	09/12/14	8260B	<0.001	<0.001	<0.001	<0.0015	<0.001
	09/16/13	8260B	<0.001	<0.001	<0.001	<0.0015	<0.001
	08/22/12	8260B	<0.001	<0.001	<0.001	<0.0015	<0.001
	10/26/11	8260B	<0.001	<0.001	<0.001	<0.0015	<0.001
	07/28/10	8260B	<0.001	<0.001	<0.001	<0.0015	<0.001
OW-12	12/03/19	8260B	0.0011	<0.001	0.00054	<0.0015	<0.001
	09/19/18	8260B	<0.001	<0.001	<0.001	<0.0015	0.00051
	09/19/17	8260B	<0.001	<0.001	<0.001	<0.0015	<0.001
	09/08/16	8260B	<0.001	<0.001	<0.001	<0.0015	<0.001
	08/14/15	8260B	<0.001	<0.001	<0.001	<0.0015	<0.001
	09/12/14	8260B	<0.001	<0.001	<0.001	<0.0015	<0.001
	09/10/13	8260B	<0.001	<0.001	<0.001	<0.0015	<0.001
	08/22/12	8260B	<0.001	<0.001	<0.001	<0.0015	<0.001
	10/26/11	8260B	<0.001	<0.001	<0.001	<0.0015	<0.001
	07/22/10	8021B	<0.001	<0.001	<0.001	<0.002	<0.0025

DEFINITIONS

NA = Not analyzed; NE = Not established

Bold and highlighted values represent values above the applicable standards

STANDARDS

WQCC 20 NMAC 6.2.3103 - Standards for Ground Water of 10,000 mg/l TDS Concentration or Less.

a) Human Health Standards; b) Other Standards for Domestic Water

40 CFR 141.61 Maximum Contaminant Levels for Organic Contaminants

NMED Risk Assessment Guidance for Investigations and Remediations Table A-1

EPA Regional Screening Level (RSL) Summary Table

8.4.1 OW-11, OW-12
General Chemistry and DRO/GRO/MRO Analytical Result Summary

STANDARDS			PARAMETERS								
			Fluoride (mg/L)	Chloride (mg/L)	Nitrite (mg/L)	Nitrate (mg/L)	Phosphorus (mg/L)	Sulfate (mg/L)	GRO (mg/L)	DRO (mg/L)	MRO (mg/L)
WQCC 20 NMAC 6.2.3103 (DEC 2018)			**1.6**	**250.0**	**1**	**10**	NE	**600.0**	NE	NE	NE
40 CFR 141.62 MCL			4.0	NE	1	10	NE	NE	NE	NE	NE
NMED TAP WATER (JUNE 2019)			1.18	NE	1.97	31.60	NE	NE	NE	NE	NE
EPA RSL for Tap Water (NOV 2019)			0.8	NE	2	32	NE	NE	NE	NE	NE
NMED SSG (JUNE 2019)			NE	NE	NE	NE	NE	NE	**0.0101**	**0.0167**	**0.0858**
WELL ID	**DATE SAMPLED**	**METHOD**									
OW-11	08/20/19	300.0/8015D	**2**	98	<0.5	1.6	<2.5	**940**	*<0.05**	*<1.0**	*<5.0**
	09/18/18	300.0/8015D	**1.8**	90	<0.5	0.89	<10	**1000**	*<1.0**	*<0.05**	*<5.0**
	09/18/17	300.0/8015D	**1.7**	97	**1.2**	1.2	<2.5	**850**	*<0.05**	*<1.0**	*<5.0**
	09/09/16	300.0/8015D	1.6	100	**1.7**	1.7	<10	**900**	*<0.05**	*<1.0**	*<5.0**
	08/17/15	300.0/8015D	**1.9**	100	**2.1**	2.1	<0.5	**880**	*<0.05**	*<1.0**	*<5.0**
	09/12/14	300.0	**2.3**	77	<0.1	0.34	<0.5	**960**			
	09/16/13	300.0	**2.6**	81	<0.1	0.34	<0.5	**960**			
	08/22/12	300.0	**1.7**	82	*<1.0**	<1.0	<10	**940**			
	10/26/11	300.0	**2.2**	95	<0.1	0.77	<0.5	**940**			
	07/28/10	300.0	**2.8**	89	<0.1	0.3	<0.5	**1100**			
OW-12	12/03/19	300.0/8015D	<0.50	17	<0.50	<0.50	<2.5	160	*<0.05**	*<0.40**	*<2.5**
	09/19/18	8015D	NA	NA	NA	NA	NA	NA	*<0.05**	*<1.0**	*<5.0**
	09/19/17	300.0/8015D	0.52	17	<0.5	0.11	<2.5	170	*<0.05**	*<1.0**	*<5.0**
	09/08/16	300.0/8015D	0.4	19	*<1.0**	<1.0	0.37	160	*<0.05**	*<1.0**	*<5.0**
	08/14/15	300.0/8015D	0.49	18	<0.1	<0.1	<0.5	151	*<0.06**	*<1.1**	*<5.1**
	09/12/14	300.0	0.47	19	*<1.0**	<1.0	<0.5	150			
	08/22/12 [1]	300.0	0.48	16	*<1.0**	<1.0	<0.5	150			

DEFINITIONS

NA = Not analyzed; NE = Not established

Bold and highlighted values represent values above the applicable standards

STANDARDS

WQCC 20 NMAC 6.2.3103 - Standards for Ground Water of 10,000 mg/l TDS Concentration or Less.

a) Human Health Standards; b) Other Standards for Domestic Water

40 CFR 141.62 Maximum Contaminant Levels for Inorganic Contaminants

NMED Risk Assessment Guidance for Investigations and Remediations Table A-1

EPA Regional Screening Level (RSL) Summary Table

NMED Soil Screening Guidance Volume 1, Table 6-4 (groundwater)

NOTES

Items notes with a * and italics have a detection limit greater than or equal to the applicable standard.

1) General Chemistry analysis requested as part of the annual sampling

8.4.2 OW-11, OW-12

Total Metals Analytical Result Summary

STANDARDS			PARAMETERS											
			Arsenic (mg/L)	Barium (mg/L)	Cadmium (mg/L)	Chromium (mg/L)	Copper (mg/L)	Iron (mg/L)	Lead (mg/L)	Manganese (mg/L)	Selenium (mg/L)	Mercury (ug/L)	Uranium (mg/L)	Zinc (mg/L)
WQCC 20 NMAC 6.2.3103 (DEC 2018)			**0.01**	**2**	**0.005**	**0.05**	**1.0**	**1.0**	**0.015**	**0.2**	**0.05**	**2**	**0.03**	**10**
40 CFR 141.62 MCL			0.01	2.0	0.005	0.1	1.3	NE	0.015	NE	0.05	2	0.03	NE
NMED TAP WATER (JUNE 2019)			0.000855	3.28	0.00624	0.0057	0.7898	13.8	NE	2.02	0.0987	0.626	0.0592	5.96
EPA RSL for Tap Water (NOV 2019)			0.000052	3.8	0.0092	22	0.8	14	0.015	0.43	0.1	0.63	0.004	6
WELL ID	**DATE SAMPLED**	**METHOD**												
OW-11	08/20/19	200.7/200.8	0.002	0.008	<0.002	<0.006	<0.006	0.012	<0.0005	0.018	0.0044	<0.2	**0.19**	<0.01
	09/18/18	200.7/200.8	0.002	0.008	<0.002	<0.006	<0.006	0.012	<0.0005	0.018	0.0024	0.047	**0.18**	<0.01
	09/18/17	200.7/200.8	0.0029	0.0077	<0.002	<0.006	<0.006	0.011	<0.0005	0.019	0.005	<0.2	**0.21**	<0.01
	09/09/16	200.7/200.8	0.0023	0.0080	<0.002	<0.006	<0.006	<0.02	<0.0005	0.016	0.0074	0.095	**0.18**	<0.01
	08/17/15	200.7/200.8	*<0.01**	0.0076	<0.002	<0.006	<0.006	0.025	<0.0005	0.015	<0.01	<0.2	**0.23**	<0.01
	09/12/14	200.7/200.8	0.0027	0.0083	<0.002	<0.006	<0.006	0.047	<0.001	0.021	0.0023	<0.2	**0.25**	<0.01
	09/16/13	200.7/200.8	0.0023	0.0084	<0.002	<0.006	<0.006	0.028	<0.001	0.019	0.0018	<0.2	**0.25**	<0.01
	08/22/12	200.7/200.8	<0.0025	0.0086	<0.002	<0.006	<0.006	0.041	<0.005	0.095	0.0032	<0.2	**0.22**	<0.01
	10/26/11	200.7/200.8	<0.0025	0.0077	<0.002	<0.006	<0.006	<0.02	<0.005	0.016	0.003	<0.2	**0.21**	<0.01
	07/28/10	6010B	*<0.02**	<0.02	<0.002	<0.006	<0.006	<0.05	<0.005	0.016	<0.05	<0.2	**0.236**	<0.02
OW-12	12/03/19	200.7/200.8	0.002	0.024	<0.002	0.0034	<0.006	0.14	0.00057	0.0093	<0.001	<0.2	0.012	0.0067
	09/19/18	200.7/200.8	0.002	0.038	<0.002	0.0046	<0.006	0.43	0.001	0.018	<0.001	0.062	0.011	0.0061
	09/19/17	200.7/200.8	0.0019	0.023	<0.002	0.0041	0.0019	0.11	0.00032	0.0058	0.00089	<0.2	NA	0.017
	09/08/16	200.7/200.8	0.0021	0.025	<0.002	0.0055	<0.006	0.11	0.00028	0.0063	0.00080	0.11	0.012	<0.01
	08/14/15	200.7/200.9	0.0016	0.023	<0.002	<0.006	<0.006	**1.078**	<0.0006	**1.00**	<0.001	<0.2	0.014	<0.02
	09/12/14	200.7/200.8	0.0021	0.024	<0.002	<0.006	<0.006	0.12	<0.001	0.0054	0.0011	<0.2	0.014	<0.01
	09/10/13	200.7/200.8	0.0019	0.027	<0.002	<0.006	<0.006	0.17	<0.001	0.009	<0.001	<0.2	0.013	<0.01
	08/22/12 [1]	200.7/200.8	<0.0025	0.028	<0.002	<0.006	<0.006	0.29	<0.005	0.013	<0.0025	<0.2	0.013	<0.01

DEFINITIONS

NA = Not analyzed; NE = Not established

Bold and highlighted values represent values above the applicable standards

STANDARDS

WQCC 20 NMAC 6.2.3103 - Standards for Ground Water of 10,000 mg/l TDS Concentration or Less.

a) Human Health Standards; b) Other Standards for Domestic Water

40 CFR 141.62 Maximum Contaminant Levels for Inorganic Contaminants

NMED Risk Assessment Guidance for Investigations and Remediations Table A-1

EPA Regional Screening Level (RSL) Summary Table

NOTES

Items notes with a * and italics have a detection limit greater than or equal to the applicable standard.

1) Method 200.7/200.8 analysis requested as part of the annual sampling

8.4.3 OW-11, OW-12
Dissolved Metals Analytical Result Summary

			PARAMETERS								
STANDARDS			Arsenic (mg/L)	Barium (mg/L)	Copper (mg/L)	Iron (mg/L)	Lead (mg/L)	Manganese (mg/L)	Selenium (mg/L)	Uranium (mg/L)	Zinc (mg/L)
WQCC 20 NMAC 6.2.3103 (DEC 2018)			**0.01**	**2**	**1.0**	**1.0**	**0.015**	**0.2**	**0.05**	**0.03**	**10**
40 CFR 141.62 MCL			0.01	2.0	1.3	NE	0.015	NE	0.05	0.03	NE
NMED TAP WATER (JUNE 2019)			0.000855	3.28	0.7898	13.8	NE	2.02	0.0987	0.0592	5.96
EPA RSL for Tap Water (NOV 2019)			0.000052	3.8	0.8	14	0.015	0.43	0.1	0.004	6
WELL ID	**DATE SAMPLED**	**METHOD**									
OW-11	08/20/19	200.7/200.8	0.0019	0.0068	0.004	<0.02	<0.0005	0.017	0.0047	**0.2**	0.0039
	09/18/18	200.7/200.8	0.0018	0.0075	<0.006	<0.02	<0.0005	0.018	0.0025	**0.21**	0.0098
	09/18/17	200.7/200.8	0.0026	0.0078	0.0044	<0.02	<0.0005	0.019	0.0042	NA	0.087
	09/09/16	200.7/200.8	0.0021	0.0087	<0.006	<0.02	<0.0005	0.015	0.0081	**0.18**	0.0091
	08/17/15	200.7/200.8	<0.005	0.0074	<0.006	<0.02	<0.0025	0.015	0.0083	**0.21**	<0.01
	09/12/14	200.7/200.8	0.0026	0.0080	<0.006	<0.02	<0.001	0.017	0.0020	**0.25**	<0.01
	09/16/13	200.7/200.8	0.0024	0.0084	<0.006	<0.02	<0.001	0.019	0.0024	**0.23**	0.021
	08/22/12	200.7/200.8	0.0021	0.0084	<0.006	<0.02	<0.005	0.012	0.0034	**0.21**	0.024
	10/26/11	200.7/200.8	0.002	0.0075	<0.006	<0.02	<0.005	0.016	0.0034	**0.22**	0.11
	07/28/10	6010B	*<0.02**	<0.02	<0.006	<0.02	<0.005	0.016	<0.05	**0.215**	<0.05
OW-12	12/03/19	200.7/200.8	0.002	0.019	<0.006	0.026	0.00019	0.0093	0.00027	0.012	0.024
	09/19/18	200.7/200.8	0.002	0.021	<0.006	0.069	<0.005	0.004	<0.001	0.012	0.0081
	09/19/17	200.7/200.8	0.002	0.02	<0.006	0.049	<0.0005	0.0026	<0.005	NA	0.035
	09/08/16	200.7/200.8	0.002	0.02	<0.006	0.047	0.00021	0.0027	0.00094	0.013	0.004
	08/14/15	200.7/200.9	<0.006	1.02	<0.006	**1.043**	<0.0026	**1.003**	<0.006	0.012	<0.02
	09/12/14	200.7/200.8	0.002	0.021	<0.006	0.037	<0.01	<0.002	0.0011	0.012	0.023
	09/10/13	200.7/200.8	0.002	0.022	<0.006	0.048	<0.001	0.0021	<0.001	0.013	0.014
	08/22/12 [1]	200.7/200.8	0.0018	0.021	<0.006	0.053	<0.005	0.0033	<0.001	0.012	0.031

DEFINITIONS

NA = Not analyzed; NE = Not established

Bold and highlighted values represent values above the applicable standards

STANDARDS

WQCC 20 NMAC 6.2.3103 - Standards for Ground Water of 10,000 mg/l TDS Concentration or Less.

a) Human Health Standards; b) Other Standards for Domestic Water

40 CFR 141.62 Maximum Contaminant Levels for Inorganic Contaminants

NMED Risk Assessment Guidance for Investigations and Remediations Table A-1

EPA Regional Screening Level (RSL) Summary Table

NOTES

Items notes with a * and italics have a detection limit greater than or equal to the applicable standard.

1) Method 200.7/200.8 analysis requested as part of the annual sampling

8.4.4 OW-11, OW-12
Organic Compounds Analytical Result Summary

			PARAMETERS			
STANDARDS			Bis (2-ethylhexyl) phthalate (mg/L)	Acetone (mg/L)	1,2,4-Trimethylbenzene (mg/L)	1,2-Dichloroethane (EDC) (mg/L)
WQCC 20 NMAC 6.2.3103 (DEC 2018)			NE	NE	NE	**0.005**
40 CFR 141.61 MCL			**0.006**	NE	NE	0.005
NMED TAP WATER (JUNE 2019)			0.0556	**14.06**	NE	0.0017
EPA RSL for Tap Water (NOV 2019)			0.056	14	**0.056**	0.0017
WELL ID	DATE SAMPLED	METHOD				
OW-11	08/20/19	8260B	NA	<0.01	0.00031	0.00038
	09/18/18	8260B	NA	<0.01	<0.001	<0.001
	08/17/15	8270C	*<0.01**	NA	NA	NA
	09/12/14	8270C	*<0.01**	NA	NA	NA
	09/16/13	8270C	**0.011**	NA	NA	NA
OW-12	12/03/19	8260B	NA	0.0022	<0.001	<0.001
	09/19/18	8260B	NA	0.0042	<0.001	<0.001

DEFINITIONS

NA = Not analyzed; NE = Not established

Bold and highlighted values represent values above the applicable standards

STANDARDS

WQCC 20 NMAC 6.2.3103 - Standards for Ground Water of 10,000 mg/l TDS Concentration or Less.

a) Human Health Standards; b) Other Standards for Domestic Water

40 CFR 141.61 Maximum Contaminant Levels for Organic Contaminants

NMED Risk Assessment Guidance for Investigations and Remediations Table A-1

EPA Regional Screening Level (RSL) Summary Table

NOTES

Items notes with a * and italics have a detection limit greater than or equal to the applicable standard.

8.5 OW-50, OW-52, OW-54, OW-55, OW-56, OW-57, OW-58, OW-63, OW-64
BTEX and MTBE Analytical Result Summary

STANDARDS			PARAMETERS				
			Benzene (mg/L)	Toluene (mg/L)	Ethylbenzene (mg/L)	Total Xylenes (mg/L)	MTBE (mg/L)
WQCC 20 NMAC 6.2.3103 (DEC 2018)			**0.005**	**1**	**0.7**	**0.62**	**0.1**
40 CFR 141.61 MCL			0.005	1.0	0.7	10	NE
NMED TAP WATER (JUNE 2019)			0.00455	1.09	0.0149	0.193	0.143
EPA RSL for Tap Water (NOV 2019)			0.0046	1.1	0.0015	0.19	0.14
WELL ID	**DATE SAMPLED**	**METHOD**					
OW-50	10/15/19	8260B	<0.001	<0.001	<0.001	<0.0015	0.02
	08/16/19	8260B	<0.001	<0.001	<0.001	<0.0015	0.021
	05/01/19	8260B	0.00019	<0.001	<0.001	<0.0015	0.018
	03/27/19	8260B	<0.001	<0.001	<0.001	<0.0015	0.013
	11/07/18	8260B	<0.001	<0.001	<0.001	<0.0015	0.01
	09/17/18	8260B	<0.001	<0.001	<0.001	<0.0015	0.01
	09/11/17	8260B	<0.001	<0.001	<0.001	<0.0015	0.0059
	09/09/16	8260B	<0.001	<0.001	<0.001	<0.0015	0.00024
	08/11/15	8260B	<0.001	<0.001	<0.001	<0.0015	<0.001
	09/15/14	8260B	<0.001	<0.001	<0.001	<0.0015	<0.001
	09/04/13 [1]	8260B	<0.001	<0.001	<0.001	<0.0015	<0.001
	11/27/12	8260B	<0.001	<0.001	<0.001	<0.0015	<0.001
	08/23/12	8260B	<0.001	<0.001	<0.001	<0.0015	<0.001
	06/13/12	8260B	<0.001	<0.001	<0.001	<0.0015	<0.001
	03/22/12	8260B	<0.001	<0.001	<0.001	<0.0015	<0.001
	12/15/11	8260B	*<0.005**	<0.005	<0.005	<0.0075	<0.005
	10/25/11	8260B	<0.001	<0.001	<0.001	<0.0015	<0.001
	06/20/11	8260B	<0.001	<0.001	<0.001	<0.0015	<0.001
	03/01/11	8260B	<0.001	<0.001	<0.001	<0.0015	<0.001
	11/09/10	8260B	<0.001	<0.001	<0.001	<0.0015	<0.001
	09/27/10	8260B	<0.001	<0.001	<0.001	<0.0015	<0.001
	06/01/10	8260B	<0.001	<0.001	<0.001	<0.0015	<0.001
	03/16/10	8260B	<0.001	<0.001	<0.001	<0.0015	<0.001

8.5 OW-50, OW-52, OW-54, OW-55, OW-56, OW-57, OW-58, OW-63, OW-64
BTEX and MTBE Analytical Result Summary

STANDARDS			PARAMETERS				
			Benzene (mg/L)	Toluene (mg/L)	Ethylbenzene (mg/L)	Total Xylenes (mg/L)	MTBE (mg/L)
WQCC 20 NMAC 6.2.3103 (DEC 2018)			**0.005**	**1**	**0.7**	**0.62**	**0.1**
40 CFR 141.61 MCL			0.005	1.0	0.7	10	NE
NMED TAP WATER (JUNE 2019)			0.00455	1.09	0.0149	0.193	0.143
EPA RSL for Tap Water (NOV 2019)			0.0046	1.1	0.0015	0.19	0.14
WELL ID	**DATE SAMPLED**	**METHOD**					
OW-52	10/15/19	8260B	<0.001	<0.001	<0.001	<0.0015	0.002
	08/16/19	8260B	<0.001	<0.001	<0.001	<0.0015	0.0022
	05/01/19	8260B	0.00019	<0.001	<0.001	<0.0015	0.0019
	03/27/19	8260B	<0.001	<0.001	<0.001	<0.0015	0.0016
	11/07/18	8260B	<0.001	<0.001	<0.001	<0.0015	0.0015
	09/17/18	8260B	<0.001	<0.001	<0.001	<0.0015	0.001
	09/11/17	8260B	<0.001	<0.001	<0.001	<0.0015	0.001
	09/09/16	8260B	<0.001	<0.001	<0.001	<0.0015	0.00046
	08/11/15	8260B	<0.001	<0.001	<0.001	<0.0015	<0.001
	09/15/14	8260B	<0.001	<0.001	<0.001	<0.0015	<0.001
	09/04/13 [1]	8260B	<0.001	<0.001	<0.001	<0.0015	<0.001
	11/27/12	8260B	<0.001	<0.001	<0.001	<0.0015	<0.001
	08/23/12	8260B	<0.001	<0.001	<0.001	<0.0015	<0.001
	06/13/12	8260B	<0.001	<0.001	<0.001	<0.0015	<0.001
	03/22/12	8260B	<0.001	<0.001	<0.001	<0.0015	<0.001
	12/13/11	8260B	<0.001	<0.001	<0.001	<0.0015	<0.001
	10/25/11	8021B	<0.001	<0.001	<0.001	<0.0015	<0.001
	06/20/11	8260B	<0.001	<0.001	<0.001	<0.0015	<0.001
	03/01/11	8260B	<0.001	<0.001	<0.001	<0.0015	<0.001
	11/09/10	8260B	<0.001	<0.001	<0.001	<0.0015	<0.001
	09/27/10	8260B	<0.001	<0.001	<0.001	<0.0015	<0.001
	06/01/10	8260B	<0.001	<0.001	<0.001	<0.0015	<0.001
	03/16/10	8260B	<0.001	<0.001	<0.001	<0.0015	<0.001
OW-53	10/15/19	--			Dry		
	08/21/19	--			Dry		
	05/02/19	--			Dry		
	02/06/19	--			Dry		
OW-54	10/15/19	--			SPH		
	08/21/19	8260B	**0.075**	0.002	0.022	0.0034	**1.7**
	05/02/19	8260B	**0.1**	0.0034	0.031	<0.0075	**1.8**
	02/06/19	8260B	**0.073**	<0.002	0.02	<0.003	**1.6**
	11/07/18	8260B	**0.052**	0.0011	0.015	0.001	**1.5**
	08/28/18	8260B	**0.052**	0.0011	0.0083	<0.003	**2**
	05/08/18	8260B	**0.058**	0.00088	0.013	<0.0075	**1.8**
	02/22/18	8260B	**0.05**	0.00089	0.013	<0.0075	**1.9**
	12/06/17	8260B	**0.055**	0.00093	0.016	<0.0075	**1.9**
	09/11/17	8260B	**0.14**	0.0031	0.037	<0.0075	**1.9**
	06/21/17	8260B	**0.17**	0.0047	0.046	0.0038	**2.3**
	03/29/17	8260B	**0.15**	0.0047	0.042	0.0039	**2.2**

8.5 OW-50, OW-52, OW-54, OW-55, OW-56, OW-57, OW-58, OW-63, OW-64
BTEX and MTBE Analytical Result Summary

STANDARDS			PARAMETERS				
			Benzene (mg/L)	Toluene (mg/L)	Ethylbenzene (mg/L)	Total Xylenes (mg/L)	MTBE (mg/L)
WQCC 20 NMAC 6.2.3103 (DEC 2018)			**0.005**	**1**	**0.7**	**0.62**	**0.1**
40 CFR 141.61 MCL			0.005	1.0	0.7	10	NE
NMED TAP WATER (JUNE 2019)			0.00455	1.09	0.0149	0.193	0.143
EPA RSL for Tap Water (NOV 2019)			0.0046	1.1	0.0015	0.19	0.14
WELL ID	**DATE SAMPLED**	**METHOD**					
OW-55	10/15/19	--			SPH		
	08/21/19	--			SPH		
	05/02/19	8260B	**9**	0.7	0.66	0.56	**1.6**
	02/06/19	8260B	**8.6**	0.56	0.66	0.48	**1.4**
	11/07/18	8260B	**7**	0.35	**0.75**	0.38	**1.3**
	08/28/18	8260B	**7.9**	0.33	0.65	<0.03	**1.7**
	05/08/18	8260B	**7.5**	0.4	0.59	0.33	**1.7**
	02/22/18	8260B	**7.7**	0.35	0.62	0.3	**1.6**
	12/06/17	8260B	**7.1**	0.36	0.56	0.29	**1.7**
	09/11/17	8260B	**12**	0.9	0.69	**0.66**	**2**
	06/21/17	8260B	**13**	0.9	**0.72**	**0.76**	**2.4**
	03/29/17	8260B	**14**	**1.1**	**0.74**	**1.1**	**2**
OW-56	10/15/19	8260B	0.0011	<0.001	<0.001	<0.0015	0.011
	08/21/19	8260B	0.0015	<0.001	<0.001	<0.0015	0.017
	05/02/19	8260B	0.00078	<0.001	<0.001	<0.0015	0.046
	02/06/19	8260B	<0.001	<0.001	<0.001	<0.0015	0.058
	11/07/18	8260B	0.0018	<0.001	<0.001	<0.0015	0.062
	08/28/18	8260B	0.0011	<0.001	<0.001	<0.0015	0.069
	05/08/18	8260B	0.00027	<0.001	<0.001	<0.0015	0.091
	02/22/18	8260B	0.00022	0.000067	<0.001	<0.0015	0.1
	12/06/17	8260B	0.0021	<0.001	<0.001	<0.0015	**0.11**
	09/11/17	8260B	0.0011	<0.001	<0.001	<0.0015	**0.11**
	06/21/17	8260B	0.00038	<0.001	<0.001	<0.0015	**0.14**
	03/29/17	8260B	0.00024	<0.001	<0.001	<0.0015	**0.12**
OW-57	11/05/19	8260B	**11**	0.076	0.54	0.13	0.092
	08/21/19	8260B	**12**	0.091	0.56	0.13	0.1
	05/16/19	8260B	**11**	0.089	0.54	0.11	0.095
	02/20/19	8260B	**12**	0.089	0.56	0.12	**0.11**
	11/29/18	8260B	**11**	0.061	0.51	0.11	**1**
	08/28/18	8260B	**12**	0.041	0.57	0.12	**0.12**
	05/08/18	8260B	**12**	0.03	0.56	0.11	**0.12**
	02/20/18	8260B	**12**	0.035	0.58	0.11	**0.12**
	12/06/17	8260B	**11**	0.024	0.52	0.083	0.098
	09/19/17	8260B	**9.4**	0.025	0.46	0.096	**0.12**
	06/21/17	8260B	**14**	0.03	0.54	0.11	**0.15**
	03/30/17	8260B	**8.6**	0.024	0.38	0.1	0.1

8.5 OW-50, OW-52, OW-54, OW-55, OW-56, OW-57, OW-58, OW-63, OW-64
BTEX and MTBE Analytical Result Summary

STANDARDS			PARAMETERS				
			Benzene (mg/L)	Toluene (mg/L)	Ethylbenzene (mg/L)	Total Xylenes (mg/L)	MTBE (mg/L)
WQCC 20 NMAC 6.2.3103 (DEC 2018)			**0.005**	**1**	**0.7**	**0.62**	**0.1**
40 CFR 141.61 MCL			0.005	1.0	0.7	10	NE
NMED TAP WATER (JUNE 2019)			0.00455	1.09	0.0149	0.193	0.143
EPA RSL for Tap Water (NOV 2019)			0.0046	1.1	0.0015	0.19	0.14
WELL ID	**DATE SAMPLED**	**METHOD**					
OW-58	11/18/19	8260B	**33**	0.085	**12**	0.16	**2.1**
	08/22/19	8260B	**27**	0.11	**0.91**	0.2	**2.4**
	06/05/19	8260B	**34**	0.62	**1.2**	0.13	**2.3**
	03/28/19	8260B	**25**	1	**1.1**	0.16	**2.3**
	11/18/19	8260B	**33**	0.085	**12**	0.16	**2.1**
	08/22/19	8260B	**27**	0.11	**0.91**	0.2	**2.4**
	06/05/19	8260B	**34**	0.62	**1.2**	0.13	**2.3**
	03/28/19	8260B	**25**	1	**1.1**	0.16	**2.3**
	11/29/18	8260B	**35**	0.11	**1.2**	0.19	**2.5**
	08/28/18	8260B	**38**	0.097	**1.2**	0.19	**2.9**
	05/08/18	8260B	**38**	0.084	**1.2**	0.18	**2.8**
	02/20/18	8260B	**33**	0.053	**1.2**	0.13	**2.9**
	12/06/17	8260B	**32**	0.04	**1.2**	0.12	**2.9**
	09/19/17	8260B	**29**	0.22	**1.1**	0.37	**3.1**
	06/21/17	8260B	**38**	0.16	**1.2**	0.36	**3.7**
	03/29/17	8260B	**31**	0.83	**1.1**	**0.97**	**3**
OW-58A	12/03/19	8260B	**13**	0.78	0.56	**1.3**	**2.6**
OW-61	11/04/19	--			SPH		
	08/20/19	--			SPH		
	05/15/19	--			SPH		
	02/19/19	--			SPH		
OW-63	11/18/19	8260B	**8.6**	0.063	**1.1**	0.26	0.032
	08/19/19	8260B	**8.7**	0.067	**1.2**	0.31	0.043
	05/15/19	8260B	**8.3**	0.059	**1.1**	0.30	0.032
	02/20/19	8260B	**10**	0.065	**1.1**	0.36	0.041
	12/03/18	8260B	**8.8**	0.07	**1.1**	0.43	0.033
	08/22/18	8260B	**9**	0.084	**1.1**	0.52	0.048
	04/29/18	8260B	**8.9**	0.12	**1.4**	**0.68**	0.037
OW-64 [3]	11/18/19	8260B	**0.013**	<0.002	0.039	0.05	<0.002
	08/19/19	8260B	**0.063**	0.011	0.11	0.17	<0.01
	05/15/19	8260B	**0.068**	0.011	0.19	0.44	<0.005
	02/20/19				SPH		
	12/03/18				SPH		
	08/22/18	8260B	**0.18**	0.55	0.4	**1.5**	<0.005
	04/29/18	8260B	**0.59**	**1.6**	0.36	**3.2**	<0.005

8.5 OW-50, OW-52, OW-54, OW-55, OW-56, OW-57, OW-58, OW-63, OW-64
BTEX and MTBE Analytical Result Summary

STANDARDS			PARAMETERS				
			Benzene (mg/L)	Toluene (mg/L)	Ethylbenzene (mg/L)	Total Xylenes (mg/L)	MTBE (mg/L)
WQCC 20 NMAC 6.2.3103 (DEC 2018)			**0.005**	**1**	**0.7**	**0.62**	**0.1**
40 CFR 141.61 MCL			0.005	1.0	0.7	10	NE
NMED TAP WATER (JUNE 2019)			0.00455	1.09	0.0149	0.193	0.143
EPA RSL for Tap Water (NOV 2019)			0.0046	1.1	0.0015	0.19	0.14
WELL ID	**DATE SAMPLED**	**METHOD**					
OW-65	11/04/19	--	SPH				
	08/20/19	--	SPH				
	05/15/19	--	SPH				
	02/19/19	--	SPH				

DEFINITIONS

NA = Not analyzed; NE = Not established

Bold and highlighted values represent values above the applicable standards

STANDARDS

WQCC 20 NMAC 6.2.3103 - Standards for Ground Water of 10,000 mg/l TDS Concentration or Less.

a) Human Health Standards; b) Other Standards for Domestic Water

40 CFR 141.61 Maximum Contaminant Levels for Organic Contaminants

NMED Risk Assessment Guidance for Investigations and Remediations Table A-1

EPA Regional Screening Level (RSL) Summary Table

NOTES

Wells marked in red were not sampled because SPH was present in the well or the well was dry

Items notes with a * and italics have a detection limit greater than or equal to the applicable standard.

1) *Beginning in 2013, sampling frequency changed to annual per concurrence by NMED in Comment 6 of NMED Disapproval Facility Wide Ground Water Monitoring Work Plan 2011 Updates 9/24/12.*
2) *No samples collected - dedicated recovery system installed on well.*
3) *OW-64 - No samples collected in the 4th Quarter 2018 and 1st Quarter 2019 - SPH detected.*

8.5.1 OW-50, OW-52, OW-54, OW-55, OW-56, OW-57, OW-58, OW-63, OW-64
General Chemistry and DRO/GRO/MRO Analytical Result Summary

			PARAMETERS							
STANDARDS			Fluoride (mg/L)	Chloride (mg/L)	Nitrite (mg/L)	Nitrate (mg/L)	Sulfate (mg/L)	DRO (mg/L)	GRO (mg/L)	MRO (mg/L)
WQCC 20 NMAC 6.2.3103 (DEC 2018)			**1.6**	**250.0**	**1**	**10**	**600.0**	NE	NE	NE
40 CFR 141.62 MCL			4.0	NE	1	10	NE	NE	NE	NE
NMED TAP WATER (JUNE 2019)			1.18	NE	1.97	31.60	NE	NE	NE	NE
EPA RSL for Tap Water (NOV 2019)			0.8	NE	2	32	NE	NE	NE	NE
NMED SSG (JUNE 2019)			NE	NE	NE	NE	NE	**0.0167**	**0.0101**	**0.0858**
WELL ID	**DATE SAMPLED**	**METHOD**								
OW-50	10/15/19	300.0/8015D	0.39	42	*<1.0**	<1.0	160	*<1.0**	*<0.05**	*<5.0**
	08/16/19	8015D/300.0	0.48	40	<0.5	<0.5	160	*<1.0**	*<0.05**	*<5.0**
	05/01/19	300.0/8015D	0.46	40	<0.5	<0.5	170	*<1.0**	*<0.05**	*<5.0**
	03/27/19	300.0/8015D	0.41	40	<0.5	<0.5	170	*<1.0**	*<0.05**	*<5.0**
	11/07/18	300.0/8015D	<0.5	40	<0.5	<0.5	170	*<1.0**	*<0.05**	*<5.0**
	09/17/18	8015D	NA	NA	NA	NA	NA	*<1.0**	*<0.05**	*<5.0**
	09/11/17	300.0/8015D	0.37	35	*<1.0**	<1.0	160	*<1.0**	*<0.05**	*<5.0**
	09/09/16	300.0/8015D	0.36	31	*<1.0**	<1.0	150	*<1.0**	*<0.05**	*<5.0**
	08/11/15	300.0/8015D	0.47	31	*<1.0**	<1.0	150	*<1.1**	*<0.06**	*<5.1**
	09/15/14	300.0/8015D	0.45	30	<0.1	<0.1	150	*<1.0**	*<0.05**	*<5.0**
	09/04/13 [1]	300.0/8015D	0.5	26	**2**	2	140	*<1.0**	*<0.05**	*<5.0**
	11/27/12	300.0/8015D	0.54	28	*<1.0**	<1.0	160	*<1.0**	*<0.05**	*<5.0**
	08/23/12	300.0/8015D	0.42	26	*<1.0**	<1.0	140	*<1.0**	*<0.05**	*<5.0**
	06/13/12	300.0/8015D	0.54	27	*<1.0**	<1.0	140	*<1.0**	*<0.05**	*<5.0**
	03/22/12	300.0/8015D	0.59	27	<0.1	0.15	150	*<1.0**	*<0.05**	*<5.0**
	12/15/11	300.0/8015D	0.49	25	*<1.0**	<1.0	140	*<1.0**	*<0.05**	*<5.0**
	10/25/11	300.0/8015D	0.49	26	NL	NL	140	*<1.0**	*<0.05**	*<5.0**
	06/20/11	300.0/8015D	0.53	28	<0.1	<0.1	150	*<1.0**	*<0.05**	*<5.0**
	03/01/11	300.0/8015D	0.49	26	<0.1	<0.1	140	*<1.0**	*<0.05**	*<5.0**
	11/09/10	300.0/8015D	0.51	29	<0.1	<0.1	160	*<1.0**	*<0.05**	NA
	09/27/10	300.0/8015D	0.41	26	<0.1	<0.1	140	*<1.0**	*<0.05**	NA
	06/01/10	300.0/8015D	0.53	27	<0.1	<0.1	140	*<1.0**	*<0.05**	NA
	03/16/10	300.0/8015D	0.53	29	<0.1	<0.1	150	*<1.0**	*<0.05**	NA

8.5.1 OW-50, OW-52, OW-54, OW-55, OW-56, OW-57, OW-58, OW-63, OW-64
General Chemistry and DRO/GRO/MRO Analytical Result Summary

			PARAMETERS							
STANDARDS			Fluoride (mg/L)	Chloride (mg/L)	Nitrite (mg/L)	Nitrate (mg/L)	Sulfate (mg/L)	DRO (mg/L)	GRO (mg/L)	MRO (mg/L)
WQCC 20 NMAC 6.2.3103 (DEC 2018)			**1.6**	**250.0**	**1**	**10**	**600.0**	NE	NE	NE
40 CFR 141.62 MCL			4.0	NE	1	10	NE	NE	NE	NE
NMED TAP WATER (JUNE 2019)			1.18	NE	1.97	31.60	NE	NE	NE	NE
EPA RSL for Tap Water (NOV 2019)			0.8	NE	2	32	NE	NE	NE	NE
NMED SSG (JUNE 2019)			NE	NE	NE	NE	NE	**0.0167**	**0.0101**	**0.0858**
WELL ID	**DATE SAMPLED**	**METHOD**								
OW-52	10/15/19	8015D	0.45	27	*<1.0**	<1.0	140	*<1.0**	*<0.05**	*<5.0**
	08/16/19	300.0/8015D	0.53	27	<0.5	<0.5	140	*<1.0**	*<0.05**	*<5.0**
	05/01/19	300.0/8015D	0.52	26	<0.5	<0.5	140	*<1.0**	*<0.05**	*<5.0**
	03/27/19	300.0/8015D	0.5	28	<0.5	<0.5	140	*<1.0**	*<0.05**	*<5.0**
	11/07/18	8015D	NA	NA	NA	NA	NA	*<1.0**	*<0.05**	*<5.0**
	09/17/18	8015D	NA	NA	NA	NA	NA	*<1.0**	*<0.05**	*<5.0**
	09/11/17	300.0/8015D	0.43	25	*<1.0**	<1.0	130	*<1.0**	*<0.05**	*<5.0**
	09/09/16	300.0/8015D	0.38	27	*<1.0**	<1.0	140	*<1.0**	*<0.05**	*<5.0**
	08/11/15	300.0/8015D	0.47	25	*<1.0**	<1.0	130	*<1.1**	*<0.06**	*<5.1**
	09/15/14	300.0/8015D	0.5	27	<0.1	<0.1	130	*<1.0**	*<0.05**	*<5.0**
	09/04/13 [1]	300.0/8015D	0.5	27	**4.6**	4.6	140	*<1.0**	*<0.05**	*<5.0**
	11/27/12	300.0/8015D	0.64	28	*<1.0**	<1.0	140	*<1.0**	*<0.05**	*<5.0**
	08/23/12	300.0/8015D	0.49	25	*<1.0**	<1.0	120	*<1.0**	*<0.05**	*<5.0**
	06/13/12	300.0/8015D	0.58	27	*<1.0**	<1.0	140	*<1.0**	*<0.05**	*<5.0**
	03/22/12	300.0/8015D	0.56	26	<0.1	<0.1	130	*<1.0**	*<0.05**	*<5.0**
	12/13/11	300.0/8015D	<0.5	27	*<1.0**	<1.0	130	*<1.0**	*<0.05**	*<5.0**
	10/25/11	300.0/8015D	0.4	20	**1.3**	1.3	100	*<1.0**	*<0.05**	*<5.0**
	06/20/11	300.0/8015D	0.56	24	<0.1	<0.1	140	*<1.0**	*<0.05**	*<5.0**
	03/01/11	300.0/8015D	0.57	25	<0.1	<0.1	130	*<1.0**	*<0.05**	*<5.0**
	11/09/10	300.0/8015D	0.54	32	<0.1	<0.1	140	*<1.0**	*<0.05**	NA
	09/27/10	300.0/8015D	0.52	27	<0.1	<0.1	140	*<1.0**	*<0.05**	NA
	06/01/10	300.0/8015D	0.52	28	<0.1	<0.1	140	*<1.0**	*<0.05**	NA
	03/16/10	300.0/8015D	0.56	31	<0.1	<0.1	150	*<1.0**	*<0.05**	NA

8.5.1 OW-50, OW-52, OW-54, OW-55, OW-56, OW-57, OW-58, OW-63, OW-64
General Chemistry and DRO/GRO/MRO Analytical Result Summary

			PARAMETERS							
STANDARDS			Fluoride (mg/L)	Chloride (mg/L)	Nitrite (mg/L)	Nitrate (mg/L)	Sulfate (mg/L)	DRO (mg/L)	GRO (mg/L)	MRO (mg/L)
WQCC 20 NMAC 6.2.3103 (DEC 2018)			**1.6**	**250.0**	**1**	**10**	**600.0**	NE	NE	NE
40 CFR 141.62 MCL			4.0	NE	1	10	NE	NE	NE	NE
NMED TAP WATER (JUNE 2019)			1.18	NE	1.97	31.60	NE	NE	NE	NE
EPA RSL for Tap Water (NOV 2019)			0.8	NE	2	32	NE	NE	NE	NE
NMED SSG (JUNE 2019)			NE	NE	NE	NE	NE	**0.0167**	**0.0101**	**0.0858**
WELL ID	DATE SAMPLED	METHOD								
OW-53	10/15/19	--				Dry				
	08/21/19	--				Dry				
	05/02/19	--				Dry				
	02/06/19	--				Dry				
OW-54	10/15/19	--				SPH				
	08/21/19	8015D/300.0	0.15	210	<0.5	0.073	32	**1.9**	**1.8**	*<5.0**
	05/02/19	8015D/300.0	<0.5	230	*<1.0**	<1.0	32	**1.7**	**1.7**	*<5.0**
	02/06/19	8015D/300.0	<0.5	250	<0.5	<0.5	34	**1.7**	**1.3**	*<5.0**
	11/07/18	8015D/300.0	<0.5	250	<0.5	0.12	33	**1.9**	**1.6**	*<5.0**
	08/28/18	8015D/300.0	<0.5	**260**	*<1.0**	<1.0	30	**2.2**	**2.1**	*<5.0**
	05/08/18	8015D/300.0	<0.5	**260**	<0.5	0.24	34	**1.8**	**2.1**	*<5.0**
	02/22/18	8015D/300.0	<0.5	250	<0.5	<0.5	37	**2.2**	**2.4**	*<5.0**
	12/06/17	8015D/300.0	0.3	**270**	0.17		34	**2.4**	**2.6**	*<5.0**
	09/11/17	8015D/300.0	0.25	**290**	*<1.0**		31	**1.7**	**3.1**	*<5.0**
	06/21/17	8015D/300.0	0.38	**300**	*<1.0**		40	**1.9**	**2.9**	*<5.0**
	03/29/17	8015D/300.0	0.12	**330**	*<1.0**		42	**1.7**	**2.6**	*<5.0**
OW-55	10/15/19	--				SPH				
	08/21/19	--				SPH				
	05/02/19	8015D/300.0	<0.5	**270**	*<1.0**	<1.0	2.6	**3.6**	**23**	*<5.0**
	02/06/19	8015D/300.0	<0.5	**270**	<0.5	<0.5	3	**2.9**	**28**	*<5.0**
	11/07/18	8015D/300.0	<0.5	**280**	<0.5	0.084	2.1	**2.8**	**21**	*<5.0**
	08/28/18	8015D/300.0	<0.5	**300**	*<1.0**	<1.0	1.9	**3.1**	**23**	*<5.0**
	05/08/18	8015D/300.0	<0.5	**310**	<0.5	0.21	1.9	**2.9**	**24**	*<5.0**
	02/22/18	8015D/300.0	<0.5	**320**	<0.5	<0.5	1.6	**3**	**28**	*<5.0**
	12/06/17	8015D/300.0	0.54	**380**	*<1.0**		1.3	**3.1**	**26**	*<5.0**
	09/11/17	8015D/300.0	<0.5	**350**	*<1.0**		1.5	**5.1**	**46**	*<5.0**
	06/21/17	8015D/300.0	<0.5	**380**	*<1.0**		1.7	**6.3**	**42**	*<5.0**
	03/29/17	8015D/300.0	<0.1	**410**	0.73		1.2	**5.4**	**39**	*<5.0**

8.5.1 OW-50, OW-52, OW-54, OW-55, OW-56, OW-57, OW-58, OW-63, OW-64
General Chemistry and DRO/GRO/MRO Analytical Result Summary

			PARAMETERS							
STANDARDS			Fluoride (mg/L)	Chloride (mg/L)	Nitrite (mg/L)	Nitrate (mg/L)	Sulfate (mg/L)	DRO (mg/L)	GRO (mg/L)	MRO (mg/L)
WQCC 20 NMAC 6.2.3103 (DEC 2018)			**1.6**	**250.0**	**1**	**10**	**600.0**	NE	NE	NE
40 CFR 141.62 MCL			4.0	NE	1	10	NE	NE	NE	NE
NMED TAP WATER (JUNE 2019)			1.18	NE	1.97	31.60	NE	NE	NE	NE
EPA RSL for Tap Water (NOV 2019)			0.8	NE	2	32	NE	NE	NE	NE
NMED SSG (JUNE 2019)			NE	NE	NE	NE	NE	**0.0167**	**0.0101**	**0.0858**
WELL ID	DATE SAMPLED	METHOD								
OW-56	10/15/19	8015D/300.0	<0.5	**550**	*<1.0**	<1.0	20	**0.74**	**0.38**	*<5.0**
	08/21/19	8015D/300.0	<0.5	**660**	<0.5	<0.5	21	**0.53**	**0.25**	*<5.0**
	05/02/19	8015D/300.0	0.31	**710**	*<1.0**	<1.0	22	*<1.0**	**0.22**	*<5.0**
	02/09/19	8015D/300.0	<0.5	**640**	<0.5	<0.5	21	*<1.0**	**0.015**	*<5.0**
	11/07/18	8015D/300.0	<0.5	**640**	<0.5	0.069	18	*<1.0**	**0.31**	*<5.0**
	08/28/18	8015D/300.0	<0.5	**620**	*<1.0**	<1.0	21	**0.68**	**0.59**	*<5.0**
	05/08/18	8015D/300.0	<0.5	**590**	<0.5	<0.5	20	*<1.0**	**0.1**	*<5.0**
	02/22/18	8015D/300.0	0.32	**620**	<0.5	<0.5	17	*<1.0**	**0.13**	*<5.0**
	12/06/17	8015D/300.0	0.27	**590**	0.22		18	**0.83**	**1**	*<5.0**
	09/11/17	8015D/300.0	<0.5	**580**	*<1.0**		20	**0.51**	**0.36**	*<5.0**
	06/21/17	8015D/300.0	<0.5	**650**	0.13		23	**0.84**	**0.15**	*<5.0**
	03/29/17	8015D/300.0	0.1	**630**	*<1.0**		24	**0.52**	**0.15**	*<5.0**
OW-57	11/05/19	8015D/300.0	0.17	140	<0.5	<0.5	0.64	**3.6**	**28**	*<2.5**
	08/21/19	8015D/300.0	0.11	140	<0.5	<0.5	<2.5	**8.4**	**26**	*<5.0**
	05/16/19	8015D/300.0	<0.5	140	<0.5	<0.5	1.1	**7.8**	**19**	*<5.0**
	02/20/19	8015D/300.0	<0.5	150	<0.5	<0.5	2.5	**6.8**	**25**	*<5.0**
	11/29/18	8015D/300.0	<0.5	160	<0.5	<0.5	0.77	**8.6**	**21**	*<5.0**
	08/28/18	8015D/300.0	<0.5	160	*<1.0**	<1.0	1.2	**7.5**	**29**	*<5.0**
	05/08/18	8015D/300.0	<0.5	140	<0.5	0.23	1.5	**8**	**27**	*<5.0**
	02/20/18	8015D/300.0	<0.5	150	*<1.0**	<1.0	1.2	**8.8**	**28**	*<5.0**
	12/06/17	8015D/300.0	<0.5	150	0.17		1.7	**8.5**	**30**	*<5.0**
	09/19/17	8015D/300.0	<0.5	150	<0.5		1.8	**9.6**	**28**	*<5.0**
	06/21/17	8015D/300.0	<0.5	170	*<1.0**		2.3	**8.3**	**30**	*<5.0**
	03/30/17	8015D/300.0	0.27	160	0.064		4.1	**5.8**	**26**	*<5.0**

8.5.1 OW-50, OW-52, OW-54, OW-55, OW-56, OW-57, OW-58, OW-63, OW-64
General Chemistry and DRO/GRO/MRO Analytical Result Summary

			PARAMETERS							
STANDARDS			Fluoride (mg/L)	Chloride (mg/L)	Nitrite (mg/L)	Nitrate (mg/L)	Sulfate (mg/L)	DRO (mg/L)	GRO (mg/L)	MRO (mg/L)
WQCC 20 NMAC 6.2.3103 (DEC 2018)			**1.6**	**250.0**	**1**	**10**	**600.0**	NE	NE	NE
40 CFR 141.62 MCL			4.0	NE	1	10	NE	NE	NE	NE
NMED TAP WATER (JUNE 2019)			1.18	NE	1.97	31.60	NE	NE	NE	NE
EPA RSL for Tap Water (NOV 2019)			0.8	NE	2	32	NE	NE	NE	NE
NMED SSG (JUNE 2019)			NE	NE	NE	NE	NE	**0.0167**	**0.0101**	**0.0858**
WELL ID	**DATE SAMPLED**	**METHOD**								
OW-58	11/18/19	8015D/300.0	0.5	140	<0.5	<0.5	<2.5	**2.9**	**75**	*<2.5**
	08/22/19	8015D/300.0	0.28	140	0.12	<0.5	1.7	**9.2**	**64**	*<5.0**
	06/05/19	8015D/300.0	<0.5	190	<0.5	<0.5	<2.5	**7.7**	**68**	*<5.0**
	03/28/19	8015D/300.0	<0.5	150	*<1.0**	<1.0	<2.5	**7.4**	**57**	*<5.0**
	11/29/18	8015D/300.0	<0.5	160	<0.5	<0.5	<2.5	**6.3**	**69**	*<5.0**
	08/28/18	8015D/300.0	<0.5	160	<0.5	0.07	<2.5	**5.6**	**92**	*<5.0**
	05/08/18	8015D/300.0	<0.5	150	<0.5	0.21	<2.5	**5.7**	**72**	*<5.0**
	02/20/18	8015D/300.0	<0.5	140	*<1.0**	<1.0	0.53	**5.7**	**77**	*<5.0**
	12/06/17	8015D/300.0	<0.5	140	0.27		<2.5	**6.2**	**83**	*<5.0**
	09/19/17	8015D/300.0	<0.5	130	<0.5		0.78	**8.3**	**85**	*<5.0**
	06/21/17	8015D/300.0	<0.5	150	*<1.0**		0.96	**7.9**	**80**	*<5.0**
	03/29/17	8015D/300.0	<0.5	150	*<1.0**		<2.5	**9.2**	**64**	*<5.0**
OW-58A	12/03/19	8015D/300.0	0.13	190	<0.5	<0.5	22	**1.7**	**38**	*<2.5**
OW-61	11/04/19	--				SPH				
	08/20/19	--				SPH				
	05/15/19	--				SPH				
	02/19/19	--				SPH				
OW-63	11/18/19	8015D/300.0	0.45	96	<0.5	<0.5	<2.5	**2.2**	**31**	*<2.5**
	08/19/19	8015D/300.0	0.47	85	<0.5	<0.5	<2.5	**6.2**	**27**	*<5.0**
	05/15/19	8015D/300.0	0.39	92	<0.5	<0.5	0.48	**6**	**24**	*<5.0**
	02/20/19	8015D/300.0	0.42	99	<0.5	<0.5	0.40	**6**	**28**	*<5.0**
	12/03/18	8015D/300.0	<0.5	96	<0.5	<0.5	<2.5	**6.1**	**26**	*<5.0**
	08/22/18	8015D/300.0	0.39	0.88	<0..5	<0.5	<2.5	**5.9**	**35**	*<5.0**
	04/29/18	8015D/300.0	<0.5	94	*<1.0**	<1.0	<2.5	**5.6**	**29**	*<5.0**

8.5.1 OW-50, OW-52, OW-54, OW-55, OW-56, OW-57, OW-58, OW-63, OW-64
General Chemistry and DRO/GRO/MRO Analytical Result Summary

			PARAMETERS							
STANDARDS			Fluoride (mg/L)	Chloride (mg/L)	Nitrite (mg/L)	Nitrate (mg/L)	Sulfate (mg/L)	DRO (mg/L)	GRO (mg/L)	MRO (mg/L)
WQCC 20 NMAC 6.2.3103 (DEC 2018)			**1.6**	**250.0**	**1**	**10**	**600.0**	NE	NE	NE
40 CFR 141.62 MCL			4.0	NE	1	10	NE	NE	NE	NE
NMED TAP WATER (JUNE 2019)			1.18	NE	1.97	31.60	NE	NE	NE	NE
EPA RSL for Tap Water (NOV 2019)			0.8	NE	2	32	NE	NE	NE	NE
NMED SSG (JUNE 2019)			NE	NE	NE	NE	NE	**0.0167**	**0.0101**	**0.0858**
WELL ID	DATE SAMPLED	METHOD								
OW-64 [3]	11/18/19	8015D/300.0	**4.2**	93	<0.5	<0.5	72	*<0.4**	**0.83**	*<2.5**
	08/19/19	8015D/300.0	**4.8**	41	<0.5	<0.5	25	**0.59**	**2.5**	*<5.0**
	05/15/19	8015D/300.0	**4.3**	55	0.89	0.42	110	**0.72**	**5.7**	*<5.0**
	02/20/19				SPH					
	12/03/18				SPH					
	08/22/18	8015D/300.0	**4.4**	20	<0.5	<0.5	4.3	**1.3**	**14**	*<5.0**
	04/29/18	8015D/300.0	**3.7**	62	*<1.0**	<1.0	40	**2.8**	**17**	*<5.0**
OW-65	11/04/19	--				SPH				
	08/20/19	--				SPH				
	05/15/19	--				SPH				
	02/19/19	--				SPH				

DEFINITIONS
NA = Not analyzed; NE = Not established
Bold and highlighted values represent values above the applicable standards
STANDARDS
WQCC 20 NMAC 6.2.3103 - Standards for Ground Water of 10,000 mg/l TDS Concentration or Less.
a) Human Health Standards; b) Other Standards for Domestic Water
40 CFR 141.62 Maximum Contaminant Levels for Inorganic Contaminants
NMED Risk Assessment Guidance for Investigations and Remediations Table A-1
EPA Regional Screening Level (RSL) Summary Table
NMED Soil Screening Guidance Volume 1, Table 6-4 (groundwater)
NOTES
Wells marked in red were not sampled because SPH was present in the well or the well was dry
Items notes with a * and italics have a detection limit greater than or equal to the applicable standard.
Items highlighted were analyzed by nitrogen, nitrate & nitrite and the result is reported for both.

1) *Sampling frequency changed to annual per concurrence by NMED in Comment 6 of NMED Disapproval Facility Wide Ground Water Monitoring Work Plan 2011 Updates, 9/24/12.*
2) *No samples collected - dedicated recovery system installed on well.*
3) *OW-64 - No samples collected in the 4th Quarter 2018 and 1st Quarter 2019 - SPH detected.*

8.5.2 OW-50, OW-52, OW-54, OW-55, OW-56, OW-57, OW-58, OW-63, OW-64
Total Metals Analytical Result Summary

			PARAMETERS												
STANDARDS			Arsenic (mg/L)	Barium (mg/L)	Cadmium (mg/L)	Chromium (mg/L)	Copper (mg/L)	Iron (mg/L)	Lead (mg/L)	Manganese (mg/L)	Selenium (mg/L)	Silver (mg/L)	Mercury (ug/L)	Uranium (mg/L)	Zinc (mg/L)
WQCC 20 NMAC 6.2.3103 (DEC 2018)			**0.01**	**2**	**0.005**	**0.05**	**1.0**	**1.0**	**0.015**	**0.2**	**0.05**	**0.05**	**2**	**0.03**	**10**
40 CFR 141.62 MCL			0.01	2	0.005	0.1	1.3	NE	0.015	NE	0.05	NE	2	0.03	NE
NMED TAP WATER (JUNE 2019)			0.000855	3.28	0.00624	0.0057	0.7898	13.8	NE	2.02	0.0987	0.0812	0.626	0.0592	5.96
EPA RSL for Tap Water (NOV 2019)			0.000052	3.8	0.0092	22	0.8	14	0.015	0.43	0.1	0.094	0.63	0.004	6
WELL ID	DATE SAMPLED	METHOD													
OW-50	10/15/19	200.7/200.8	0.0026	0.054	<0.002	<0.006	<0.006	0.049	<0.0005	0.11	<0.001	<0.005	<0.2	NA	<0.01
	08/16/19	200.7/200.8	0.0023	0.051	<0.002	<0.006	<0.006	0.049	0.000062	0.11	<0.001	<0.005	0.083	0.012	0.0061
	05/01/19	200.7/200.8	0.0019	0.066	<0.002	0.0022	<0.006	0.64	0.00055	0.12	<0.001	<0.005	<0.2	0.012	<0.01
	03/27/19	200.7/200.8	0.0019	0.064	<0.002	0.0022	<0.006	0.48	0.00031	0.12	<0.001	<0.005	0.11	0.011	<0.01
	11/07/18	200.7/200.8	0.0023	0.069	<0.002	<0.006	<0.006	0.68	0.00037	0.12	<0.001	<0.005	0.09	0.011	<0.01
	09/17/18	200.7/200.8	0.0022	0.069	<0.002	<0.006	<0.006	0.46	0.00079	0.12	<0.001	<0.005	0.09	0.011	0.0055
	09/11/17	200.7/200.8	0.0021	0.11	<0.002	0.0029	<0.006	**1.7**	0.0015	0.13	0.0014	<0.005	<0.2	0.012	0.0068
	09/09/16	200.7/200.8	0.0021	0.087	<0.002	<0.006	<0.006	0.68	0.00087	0.12	0.0015	<0.005	0.096	0.01	0.0027
	08/11/15	200.7/200.9	0.0019	0.14	<0.002	<0.006	<0.006	0.68	0.0024	0.14	<0.001	<0.005	<0.2	0.011	0.017
	09/15/14	200.7/200.8	0.0019	0.075	<0.002	<0.006	<0.006	0.18	<0.001	0.11	0.001	<0.005	<0.2	0.01	<0.01
	09/04/13	200.7/200.8	0.0018	0.058	<0.002	<0.006	<0.006	0.6	0.0021	0.11	<0.001	<0.005	<0.2	0.0084	0.013
	11/27/12	200.7/200.8	<0.0025	0.12	<0.002	<0.006	<0.006	**1.3**	<0.005	0.12	<0.0025	<0.005	<0.2	0.0096	<0.01
	08/23/12	200.7/200.8	<0.0025	0.043	<0.002	<0.006	0.0086	0.071	<0.005	0.058	<0.0025	<0.005	<0.2	0.008	0.011
	06/13/12	200.7/200.8	<0.0025	0.081	<0.002	<0.006	<0.006	0.89	<0.005	0.1	<0.0025	<0.005	<0.2	0.0074	<0.01
	03/22/12	200.7/200.8	<0.0025	0.029	<0.002	<0.006	<0.006	0.31	<0.005	0.035	<0.0025	<0.005	<0.2	0.011	<0.01
	12/15/11	200.7/200.8	<0.0025	0.07	<0.002	<0.006	<0.006	0.51	<0.005	0.095	<0.0025	<0.005	<0.2	0.0087	<0.01
	10/25/11	200.7/200.8	<0.0025	0.041	<0.002	<0.006	<0.006	0.022	<0.005	0.082	<0.0025	<0.005	*<2**	0.0072	<0.01
	06/20/11	200.7/200.8	<0.0025	0.046	<0.002	<0.006	<0.006	0.16	<0.005	0.085	<0.0025	<0.005	<0.2	0.0071	<0.01
	03/01/11	200.7/200.8	0.003	0.045	<0.002	<0.006	<0.006	0.24	<0.005	0.086	*<0.05**	<0.005	<0.2	0.0072	<0.01
	11/09/10	200.7/200.8	0.0031	0.038	<0.002	<0.006	<0.006	<0.02	<0.005	0.079	0.0055	<0.005	<0.2	NA	0.02
	09/27/10	6010B	*<0.02**	0.041	<0.002	<0.006	<0.006	0.15	<0.005	0.032	*<0.05**	<0.005	<0.2	0.006	<0.02
	06/01/10	6010B	*<0.02**	0.042	<0.002	<0.006	NA	NA	<0.005	NA	*<0.05**	<0.005	<0.2	NA	<0.02
	03/16/10	6010B	*<0.02**	0.038	<0.002	<0.006	<0.006	<0.05	<0.005	0.079	*<0.05**	<0.005	<0.2	0.00626	<0.02

8.5.2 OW-50, OW-52, OW-54, OW-55, OW-56, OW-57, OW-58, OW-63, OW-64
Total Metals Analytical Result Summary

			PARAMETERS												
STANDARDS			Arsenic (mg/L)	Barium (mg/L)	Cadmium (mg/L)	Chromium (mg/L)	Copper (mg/L)	Iron (mg/L)	Lead (mg/L)	Manganese (mg/L)	Selenium (mg/L)	Silver (mg/L)	Mercury (ug/L)	Uranium (mg/L)	Zinc (mg/L)
WQCC 20 NMAC 6.2.3103 (DEC 2018)			**0.01**	**2**	**0.005**	**0.05**	**1.0**	**1.0**	**0.015**	**0.2**	**0.05**	**0.05**	**2**	**0.03**	**10**
40 CFR 141.62 MCL			0.01	2	0.005	0.1	1.3	NE	0.015	NE	0.05	NE	2	0.03	NE
NMED TAP WATER (JUNE 2019)			0.000855	3.28	0.00624	0.0057	0.7898	13.8	NE	2.02	0.0987	0.0812	0.626	0.0592	5.96
EPA RSL for Tap Water (NOV 2019)			0.000052	3.8	0.0092	22	0.8	14	0.015	0.43	0.1	0.094	0.63	0.004	6
WELL ID	DATE SAMPLED	METHOD													
OW-52	10/15/19	200.7/200.8	0.00083	0.03	<0.002	<0.006	<0.006	0.2	0.000057	0.026	<0.001	<0.005	0.084	NA	<0.01
	08/16/19	200.7/200.8	0.00062	0.028	<0.002	<0.006	<0.006	0.049	<0.0005	0.024	<0.001	<0.005	0.074	0.01	<0.01
	05/01/19	200.7/200.8	0.00057	0.03	<0.002	0.0054	<0.006	0.29	0.00011	0.028	<0.001	<0.005	<0.2	0.0099	<0.01
	03/27/19	200.7/200.8	0.00061	0.031	<0.002	0.0012	<0.006	0.21	0.00008	0.027	<0.001	<0.005	0.1	0.0096	<0.01
	11/07/18	200.7/200.8	0.00078	0.037	<0.002	<0.006	<0.006	0.6	0.00024	0.034	<0.001	<0.005	0.084	0.0092	0.0035
	09/17/18	200.7/200.8	0.00073	0.033	<0.002	<0.006	<0.006	0.32	<0.0005	0.03	<0.001	<0.005	<0.2	0.0093	<0.01
	09/11/17	200.7/200.8	0.00051	0.029	<0.002	<0.006	<0.006	0.091	<0.0005	0.026	<0.001	<0.005	<0.2	0.011	<0.01
	09/09/16	200.7/200.8	0.00096	0.032	<0.002	<0.006	<0.006	0.15	0.000086	0.03	0.00084	<0.005	0.094	0.01	<0.01
	08/11/15	200.7/200.9	<0.002	1.031	<0.002	<0.006	<0.006	**1.17**	<0.0006	**1.033**	<0.001	<0.005	<0.2	**1.012**	<0.02
	09/15/14	200.7/200.8	<0.001	0.032	<0.002	<0.006	<0.006	0.31	<0.001	0.036	<0.001	<0.005	<0.2	0.011	<0.01
	09/04/13	200.7/200.8	<0.001	0.029	<0.002	<0.006	<0.006	0.22	<0.001	0.043	<0.001	<0.005	<0.2	0.011	<0.01
	11/27/12	200.7/200.8	<0.0025	0.029	<0.002	<0.006	<0.006	0.15	<0.005	0.029	<0.0025	<0.005	<0.2	0.011	<0.01
	08/23/12	200.7/200.8	<0.0025	0.029	<0.002	<0.006	0.014	0.3	<0.005	0.026	<0.0025	<0.005	<0.2	0.0076	0.012
	06/13/12	200.7/200.8	<0.0025	0.028	<0.002	<0.006	<0.006	0.17	<0.005	0.027	<0.0025	<0.005	<0.2	0.01	<0.01
	03/22/12	200.7/200.8	<0.0025	0.072	<0.002	<0.006	<0.006	0.52	<0.005	0.094	<0.0025	<0.005	<0.2	0.0076	<0.01
	12/13/11	200.7/200.8	<0.0025	0.034	<0.002	0.0069	<0.006	0.43	<0.005	0.039	<0.0025	<0.005	<0.2	0.01	<0.01
	10/25/11	200.7/200.8	<0.0025	0.025	<0.002	<0.006	<0.006	0.13	<0.005	0.032	<0.0025	<0.005	<0.2	0.01	<0.01
	06/20/11	200.7/200.8	<0.0025	0.026	<0.002	<0.006	<0.006	0.11	<0.005	0.036	<0.0025	<0.005	*<2**	0.012	<0.01
	03/01/11	200.7/200.8	<0.0025	0.027	<0.002	<0.006	<0.006	0.35	<0.005	0.044	*<0.05**	<0.005	NA	0.0036	<0.01
	11/19/10	200.7/200.8	<0.0025	0.026	<0.002	<0.006	<0.006	0.056	<0.005	0.028	0.0046	<0.005	<0.2	NL	<0.01
	09/27/10	6010B	*<0.02**	0.025	<0.002	<0.006	<0.006	0.065	<0.005	0.03	*<0.05**	<0.005	<0.2	0.01	<0.02
	06/01/10	6010B	*<0.02**	0.024	<0.002	<0.006	NA	NA	<0.005	NA	*<0.05**	<0.005	<0.2	NA	NA
	03/16/10	6010B	*<0.02**	0.027	<0.002	<0.006	<0.006	0.15	<0.005	0.032	*<0.05**	<0.005	<0.2	0.0103	<0.02

8.5.2 OW-50, OW-52, OW-54, OW-55, OW-56, OW-57, OW-58, OW-63, OW-64
Total Metals Analytical Result Summary

			PARAMETERS												
STANDARDS			Arsenic (mg/L)	Barium (mg/L)	Cadmium (mg/L)	Chromium (mg/L)	Copper (mg/L)	Iron (mg/L)	Lead (mg/L)	Manganese (mg/L)	Selenium (mg/L)	Silver (mg/L)	Mercury (ug/L)	Uranium (mg/L)	Zinc (mg/L)
WQCC 20 NMAC 6.2.3103 (DEC 2018)			**0.01**	**2**	**0.005**	**0.05**	**1.0**	**1.0**	**0.015**	**0.2**	**0.05**	**0.05**	**2**	**0.03**	**10**
40 CFR 141.62 MCL			0.01	2	0.005	0.1	1.3	NE	0.015	NE	0.05	NE	2	0.03	NE
NMED TAP WATER (JUNE 2019)			0.000855	3.28	0.00624	0.0057	0.7898	13.8	NE	2.02	0.0987	0.0812	0.626	0.0592	5.96
EPA RSL for Tap Water (NOV 2019)			0.000052	3.8	0.0092	22	0.8	14	0.015	0.43	0.1	0.094	0.63	0.004	6
WELL ID	DATE SAMPLED	METHOD													
OW-53	10/15/19	--							Dry						
	08/21/19	--							Dry						
	05/02/19	--							Dry						
	02/06/19	--							Dry						
OW-54	10/15/19	--							SPH						
	08/21/19	200.7/200.8	0.0034	0.27	<0.002	0.0025	0.025	**2.8**	0.013	**1.6**	0.00059	<0.005	<0.2	**0.051**	0.0072
	05/02/19	200.7/200.8	0.0033	0.25	<0.002	0.0027	0.021	**2.8**	0.011	**1.5**	<0.005	<0.005	<0.2	**0.052**	0.0092
	02/06/19	200.7/200.8	0.0035	0.28	<0.002	<0.006	0.031	**2.7**	0.013	**1.5**	<0.001	<0.005	<0.2	**0.053**	<0.01
	11/07/18	200.7/200.8	0.0036	0.19	<0.002	<0.006	0.015	0.94	0.013	**1.3**	<0.005	0.0021	<0.2	**0.062**	0.0059
	08/28/18	200.7/200.8	0.0047	0.19	<0.002	<0.006	0.024	**1.1**	0.013	**1.4**	<0.001	0.002	0.061	**0.06**	0.007
	05/08/18	200.7/200.8	0.0032	0.15	<0.002	<0.006	0.02	0.69	0.0069	**1.5**	<0.001	<0.005	0.05	**0.058**	<0.01
	02/22/18	200.7/200.8	*<0.02**	0.22	<0.002	<0.006	0.076	**3.6**	0.015	**1.4**	*<0.02**	<0.005	<0.2	**0.059**	0.022
	12/06/17	200.7/200.8	*<0.01**	0.17	<0.002	<0.006	0.014	0.63	0.0092	**1.4**	*<0.01**	<0.005	0.072	**0.057**	<0.01
	09/11/17	200.7/200.8	0.008	1.2	<0.002	0.02	0.047	**19**	**0.033**	**2.1**	0.013	<0.005	0.037	**0.06**	0.04
	06/21/17	200.7/200.8	0.0083	0.62	<0.002	0.012	0.063	**9.5**	**0.025**	**1.7**	0.014	<0.005	<0.2	**0.063**	0.019
	03/29/17	200.7/200.8	0.0092	1.7	<0.002	0.021	0.12	**21**	**0.043**	**2.4**	0.014	<0.005	0.11	**0.06**	0.039
OW-55	10/15/19	--							SPH						
	08/21/19	--							SPH						
	05/02/19	200.7/200.8	0.0064	0.63	<0.002	<0.006	<0.006	**7.8**	0.0046	**3.6**	<0.005	<0.005	<0.2	0.0046	0.01
	02/06/19	200.7/200.8	0.0055	0.58	<0.002	<0.006	<0.006	**5.5**	0.0021	**3.8**	<0.001	<0.005	<0.2	0.007	<0.01
	11/07/18	200.7/200.8	0.0063	0.5	<0.002	<0.006	<0.006	**4.3**	0.0012	**3.6**	<0.005	0.0038	<0.2	0.0056	0.0046
	08/28/18	200.7/200.8	0.007	0.55	<0.002	0.0018	0.0053	**6.8**	0.0039	**3.8**	<0.001	0.0027	0.069	0.0064	0.013
	05/08/18	200.7/200.8	0.006	0.49	<0.002	<0.006	<0.006	**4.4**	0.00069	**4.1**	<0.001	<0.005	<0.2	0.0046	<0.01
	02/22/18	200.7/200.8	*<0.02**	0.51	<0.002	<0.03	<0.006	**3.7**	0.0006	**3.8**	*<0.02**	0.0019	<0.2	0.0043	<0.05
	12/06/17	200.7/200.8	0.0053	0.51	<0.002	<0.006	<0.006	**4.1**	<0.0025	**3.9**	<0.005	0.0017	<0.2	0.0043	<0.01
	09/11/17	200.7/200.8	0.0082	1.1	<0.002	0.019	0.017	**23**	**0.024**	**4.8**	0.007	<0.005	<0.2	0.0061	0.042
	06/21/17	200.7/200.8	0.0071	0.69	<0.002	<0.006	<0.006	**14**	0.014	**4.3**	0.0041	<0.005	<0.2	0.0063	0.023
	03/29/17	200.7/200.8	0.0079	0.81	<0.002	0.012	0.01	**15**	**0.018**	**4.6**	0.0075	<0.005	0.037	0.0056	0.026

8.5.2 OW-50, OW-52, OW-54, OW-55, OW-56, OW-57, OW-58, OW-63, OW-64
Total Metals Analytical Result Summary

			PARAMETERS												
STANDARDS			Arsenic (mg/L)	Barium (mg/L)	Cadmium (mg/L)	Chromium (mg/L)	Copper (mg/L)	Iron (mg/L)	Lead (mg/L)	Manganese (mg/L)	Selenium (mg/L)	Silver (mg/L)	Mercury (ug/L)	Uranium (mg/L)	Zinc (mg/L)
WQCC 20 NMAC 6.2.3103 (DEC 2018)			**0.01**	**2**	**0.005**	**0.05**	**1.0**	**1.0**	**0.015**	**0.2**	**0.05**	**0.05**	**2**	**0.03**	**10**
40 CFR 141.62 MCL			0.01	2	0.005	0.1	1.3	NE	0.015	NE	0.05	NE	2	0.03	NE
NMED TAP WATER (JUNE 2019)			0.000855	3.28	0.00624	0.0057	0.7898	13.8	NE	2.02	0.0987	0.0812	0.626	0.0592	5.96
EPA RSL for Tap Water (NOV 2019)			0.000052	3.8	0.0092	22	0.8	14	0.015	0.43	0.1	0.094	0.63	0.004	6
WELL ID	DATE SAMPLED	METHOD													
OW-56	10/15/19	200.7/200.8	0.0042	0.47	<0.002	0.0034	0.0047	**3.1**	0.0021	**0.24**	<0.005	<0.005	<0.2	NA	0.014
	08/21/19	200.7/200.8	0.0034	0.52	<0.002	0.0032	0.0086	**3**	0.0027	**0.26**	0.0014	<0.005	<0.2	0.017	0.016
	05/02/19	200.7/200.8	0.0038	0.49	<0.002	0.0049	0.0076	**4**	0.0044	**0.25**	<0.005	0.0014	<0.2	0.019	0.015
	02/06/19	200.7/200.8	0.0033	0.42	<0.002	<0.006	0.0094	**1.9**	0.0021	0.19	<0.001	<0.005	<0.2	0.017	<0.01
	11/07/18	200.7/200.8	0.0044	0.5	<0.002	0.0043	0.0071	**2.7**	0.0032	**0.34**	<0.005	0.0031	<0.2	0.017	0.015
	08/28/18	200.7/200.8	0.0046	0.57	<0.002	0.006	0.017	**6**	0.007	**0.44**	<0.001	0.002	0.092	0.02	0.031
	05/08/18	200.7/200.8	0.0036	0.3	<0.002	<0.006	0.011	0.48	0.00054	0.049	<0.001	<0.005	0.04	0.018	0.006
	02/22/18	200.7/200.8	*<0.02**	0.38	<0.002	<0.03	0.0098	1	0.001	0.13	*<0.02**	0.0018	<0.2	0.019	0.017
	12/06/17	200.7/200.8	0.0049	0.41	<0.002	<0.006	0.0094	**1.1**	0.0012	0.1	*<0.01**	0.0014	0.04	0.021	0.0062
	09/11/17	200.7/200.8	0.0074	0.62	<0.002	0.0096	0.011	**7.4**	0.0055	**0.35**	0.01	<0.005	<0.2	0.024	0.026
	06/21/17	200.7/200.8	0.0073	0.39	<0.002	0.0072	0.016	**5.2**	0.005	**0.31**	0.011	<0.005	<0.2	0.023	0.019
	03/29/17	200.7/200.8	0.0035	0.46	<0.002	0.01	0.01	**6.4**	0.00041	**0.33**	*<0.02**	<0.005	0.041	0.022	0.025
OW-57	11/05/19	200.7/200.8	0.0047	**4.7**	<0.002	0.0028	<0.006	**11**	0.008	**4.1**	0.002	0.0018	<0.2	0.00086	0.012
	08/21/19	200.7/200.8	0.0051	**4.4**	<0.002	0.005	0.0082	**10**	0.007	**3.8**	0.003	0.0015	<0.2	0.00092	<0.05
	05/16/19	200.7/200.8	0.0035	**3.9**	<0.002	<0.006	<0.006	**4.9**	0.0025	**2.6**	0.00061	0.0015	<0.2	0.00051	<0.01
	02/20/19	200.7/200.8	0.0045	**4.1**	<0.002	<0.006	<0.006	**5.3**	0.0015	**2.4**	<0.001	0.0024	0.048	0.00044	<0.01
	11/29/18	200.7/200.8	0.0051	**4.7**	<0.002	<0.006	<0.006	**6.9**	0.00088	**2.6**	<0.001	0.0035	<0.2	NA	0.0033
	08/28/18	200.7/200.8	0.0059	**3.9**	<0.002	<0.006	<0.006	**6.9**	0.0017	**2.5**	<0.001	0.0031	0.068	0.00056	0.0073
	05/08/18	200.7/200.8	<0.005	**4.2**	<0.002	<0.006	<0.006	**6**	<0.0025	**2.6**	<0.005	<0.005	0.044	0.00065	0.0046
	02/20/18	200.7/200.8	*<0.01**	**3.7**	<0.002	<0.006	<0.006	**5.3**	0.0016	**2.5**	*<0.01**	0.0021	0.081	0.00069	<0.01
	12/06/17	200.7/200.8	0.006	**3.7**	<0.002	<0.006	<0.006	**4.2**	0.0012	**2.3**	*<0.01**	0.0021	<0.2	0.00089	0.0042
	09/19/17	200.7/200.8	**0.011**	**3.9**	<0.002	0.0038	0.0032	**8.6**	0.0046	**2.9**	0.019	<0.005	<0.2	NA	0.016
	06/21/17	200.7/200.8	0.0083	**3.3**	<0.002	0.0017	0.0053	**4.5**	0.0039	**2.4**	0.014	<0.005	<0.2	0.0026	0.0082
	03/30/17	200.7/200.8	0.01	**2.4**	<0.002	0.0061	0.0069	**6.3**	0.0092	**2.5**	*<0.02**	<0.005	0.062	0.0042	0.014

8.5.2 OW-50, OW-52, OW-54, OW-55, OW-56, OW-57, OW-58, OW-63, OW-64
Total Metals Analytical Result Summary

			PARAMETERS												
STANDARDS			Arsenic (mg/L)	Barium (mg/L)	Cadmium (mg/L)	Chromium (mg/L)	Copper (mg/L)	Iron (mg/L)	Lead (mg/L)	Manganese (mg/L)	Selenium (mg/L)	Silver (mg/L)	Mercury (ug/L)	Uranium (mg/L)	Zinc (mg/L)
WQCC 20 NMAC 6.2.3103 (DEC 2018)			**0.01**	**2**	**0.005**	**0.05**	**1.0**	**1.0**	**0.015**	**0.2**	**0.05**	**0.05**	**2**	**0.03**	**10**
40 CFR 141.62 MCL			0.01	2	0.005	0.1	1.3	NE	0.015	NE	0.05	NE	2	0.03	NE
NMED TAP WATER (JUNE 2019)			0.000855	3.28	0.00624	0.0057	0.7898	13.8	NE	2.02	0.0987	0.0812	0.626	0.0592	5.96
EPA RSL for Tap Water (NOV 2019)			0.000052	3.8	0.0092	22	0.8	14	0.015	0.43	0.1	0.094	0.63	0.004	6
WELL ID	DATE SAMPLED	METHOD													
OW-58	11/18/19	200.7/200.8	0.0033	**4.5**	<0.002	<0.006	<0.006	**9.9**	0.0016	**2.1**	<0.001	<0.0005	<0.2	0.00037	<0.01
	08/22/19	200.7/200.8	0.0034	**4.4**	<0.002	<0.006	<0.006	**11**	0.0027	**2.1**	<0.001	0.0016	0.11	0.00042	0.015
	06/05/19	200.7/200.8	0.0028	**4.3**	<0.002	<0.006	<0.006	**9.8**	0.0015	**2.1**	<0.001	0.0015	<0.2	0.0003	0.0062
	03/28/19	200.7/200.8	0.003	**4.3**	<0.002	<0.006	<0.006	**8.8**	<0.005	**1.9**	<0.001	<0.005	0.061	0.00017	<0.01
	11/29/18	200.7/200.8	0.0036	**4.8**	<0.002	0.0061	0.0047	**10**	0.0017	**2.3**	<0.001	0.004	<0.2	NA	0.0054
	08/28/18	200.7/200.8	0.0036	**4**	<0.002	<0.006	<0.006	**8**	<0.0005	**1.9**	<0.001	0.0027	0.069	0.00017	<0.01
	05/08/18	200.7/200.8	0.0038	**4.3**	<0.002	<0.006	<0.006	**8.1**	<0.0005	**2.1**	<0.005	<0.005	0.043	0.00021	<0.01
	02/20/18	200.7/200.8	0.0043	**4.3**	<0.002	0.0022	<0.006	**11**	0.0042	**2.3**	*<0.01**	0.0014	<0.2	0.00061	0.012
	12/06/17	200.7/200.8	0.0059	**4.7**	<0.002	0.0061	0.0047	**15**	0.0095	**2.4**	0.0058	<0.005	<0.2	0.001	0.017
	09/19/17	200.7/200.8	0.0096	**5**	<0.002	0.013	0.0092	**19**	0.015	**2.8**	0.014	<0.005	<0.2	NA	0.035
	06/21/17	200.7/200.8	0.01	**5.9**	<0.002	0.02	0.019	**29**	**0.034**	**3.8**	0.012	<0.005	<0.2	0.0035	0.049
	03/29/17	200.7/200.8	0.0087	**5.7**	<0.002	0.015	0.0066	**24**	**0.024**	**3.4**	0.012	<0.005	0.042	0.0027	0.037
OW-58A	12/03/19	200.7/200.8	0.0045	0.95	<0.002	0.0023	NA	**9.6**	0.0063	**1.4**	<0.001	<0.005	<0.2	NA	0.01
OW-61	11/04/19	--							SPH						
	08/20/19	--							SPH						
	05/15/19	--							SPH						
	02/19/19	--							SPH						
OW-63	11/18/19	200.7/200.8	**0.011**	**4.4**	<0.002	<0.006	<0.006	**6.2**	0.00024	**1**	<0.001	<0.0005	<0.8	0.00013	<0.01
	08/19/19	200.7/200.8	**0.011**	**4.1**	<0.002	<0.006	<0.006	**6.1**	0.00027	**1.1**	<0.001	<0.005	<0.2	<0.0005	<0.01
	05/15/19	200.7/200.8	0.01	**4.1**	<0.002	<0.006	<0.006	**6.2**	0.00077	**1.1**	<0.001	<0.005	0.041	0.0001	<0.01
	02/20/19	200.7/200.8	**0.011**	**4**	<0.002	<0.006	<0.006	**5.7**	0.00018	**1.2**	<0.001	0.0015	0.048	0.00044	<0.01
	12/03/18	200.7/200.8	**0.012**	**3.7**	<0.002	<0.006	<0.006	**5.8**	0.00053	**1.2**	<0.001	0.0017	0.15	NA	0.0056
	08/22/18	200.7/200.8	**0.013**	**3.8**	<0.002	<0.006	<0.006	**5.9**	0.00078	**1.6**	<0.001	0.002	0.047	0.00037	0.0064
	04/29/18	200.7/200.8	**0.014**	**4**	<0.002	<0.006	<0.006	**5.8**	<0.0005	**1**	<0.001	<0.005	NA	<0.0005	<0.01
OW-64 [3]	11/18/19	200.7/200.8	0.0037	0.29	<0.002	0.0031	<0.006	**1.1**	0.0011	**0.36**	<0.001	<0.0005	<0.2	0.019	<0.01
	08/19/19	200.7/200.8	0.0046	0.37	<0.002	0.012	<0.006	**3.1**	0.0029	**0.47**	0.00053	<0.005	<0.2	0.013	0.009
	05/15/19	200.7/200.8	0.004	0.35	<0.002	0.0033	<0.006	0.44	0.001	**0.53**	0.00078	<0.005	<0.2	0.016	<0.01
	02/20/19				SPH										
	12/03/18				SPH										
	08/22/18	200.7/200.8	0.0067	0.47	<0.002	0.0033	0.018	**2.6**	0.0022	**0.46**	<0.001	<0.005	0.049	<0.0005	0.0089
	04/29/18	200.7/200.8	**0.011**	1.1	<0.002	0.02	0.032	**13**	0.015	**1**	<0.001	<0.005	NA	**0.031**	0.011

8.5.2 OW-50, OW-52, OW-54, OW-55, OW-56, OW-57, OW-58, OW-63, OW-64
Total Metals Analytical Result Summary

STANDARDS			PARAMETERS												
			Arsenic (mg/L)	Barium (mg/L)	Cadmium (mg/L)	Chromium (mg/L)	Copper (mg/L)	Iron (mg/L)	Lead (mg/L)	Manganese (mg/L)	Selenium (mg/L)	Silver (mg/L)	Mercury (ug/L)	Uranium (mg/L)	Zinc (mg/L)
WQCC 20 NMAC 6.2.3103 (DEC 2018)			**0.01**	**2**	**0.005**	**0.05**	**1.0**	**1.0**	**0.015**	**0.2**	**0.05**	**0.05**	**2**	**0.03**	**10**
40 CFR 141.62 MCL			0.01	2	0.005	0.1	1.3	NE	0.015	NE	0.05	NE	2	0.03	NE
NMED TAP WATER (JUNE 2019)			0.000855	3.28	0.00624	0.0057	0.7898	13.8	NE	2.02	0.0987	0.0812	0.626	0.0592	5.96
EPA RSL for Tap Water (NOV 2019)			0.000052	3.8	0.0092	22	0.8	14	0.015	0.43	0.1	0.094	0.63	0.004	6
WELL ID	DATE SAMPLED	METHOD													
OW-65	11/04/19	--	SPH												
	08/20/19	--	SPH												
	05/15/19	--	SPH												
	02/19/19	--	SPH												

DEFINITIONS
NA = Not analyzed; NE = Not established
Bold and highlighted values represent values above the applicable standards
STANDARDS
WQCC 20 NMAC 6.2.3103 - Standards for Ground Water of 10,000 mg/l TDS Concentration or Less.
a) Human Health Standards; b) Other Standards for Domestic Water
40 CFR 141.62 Maximum Contaminant Levels for Inorganic Contaminants
NMED Risk Assessment Guidance for Investigations and Remediations Table A-1
EPA Regional Screening Level (RSL) Summary Table
NOTES
Wells marked in red were not sampled because SPH was present in the well or the well was dry
Items notes with a * and italics have a detection limit greater than or equal to the applicable standard.
1) *Sampling frequency changed to annual per concurrence by NMED in Comment 6 of NMED Disapproval Facility Wide Ground Water Monitoring Work Plan 2011 Updates, 9/24/12.*
2) *No samples collected - dedicated recovery system installed on well.*
3) *OW-64 - No samples collected in the 4th Quarter 2018 and 1st Quarter 2019 - SPH detected.*

8.5.3 OW-50, OW-52, OW-54, OW-55, OW-56, OW-57, OW-58, OW-63, OW-64
Dissolved Metals Analytical Result Summary

			PARAMETERS											
STANDARDS			Arsenic (mg/L)	Barium (mg/L)	Cadmium (mg/L)	Chromium (mg/L)	Copper (mg/L)	Iron (mg/L)	Lead (mg/L)	Manganese (mg/L)	Selenium (mg/L)	Silver (mg/L)	Uranium (mg/L)	Zinc (mg/L)
WQCC 20 NMAC 6.2.3103 (DEC 2018)			**0.01**	**2**	**0.005**	**0.05**	**1.0**	**1.0**	**0.015**	**0.2**	**0.05**	**0.05**	**0.03**	**10**
40 CFR 141.62 MCL			0.01	2	0.005	0.1	1.3	NE	0.015	NE	0.05	NE	0.03	NE
NMED TAP WATER (JUNE 2019)			0.000855	3.28	0.00624	0.0057	0.7898	13.8	NE	2.02	0.0987	0.0812	0.0592	5.96
EPA RSL for Tap Water (NOV 2019)			0.000052	3.8	0.0092	22	0.8	14	0.015	0.43	0.1	0.094	0.004	6
WELL ID	**DATE SAMPLED**	**METHOD**												
OW-50	10/15/19	200.7/200.8	0.0019	0.052	<0.002	<0.006	0.0013	<0.02	<0.0005	0.12	<0.001	<0.005	NA	0.023
	08/16/19	200.7/200.8	0.0021	0.051	<0.002	<0.006	0.0017	<0.02	<0.0005	0.11	<0.001	<0.005	0.012	0.011
	05/01/19	200.7/200.8	0.0018	0.051	<0.002	<0.006	<0.006	0.017	<0.0005	0.11	<0.001	<0.005	0.012	0.056
	03/27/19	200.7/200.8	0.0019	0.054	<0.002	<0.006	<0.006	0.0089	<0.0005	0.12	<0.001	<0.005	0.011	0.024
	11/07/18	200.7/200.8	0.0018	0.05	<0.002	<0.006	<0.006	<0.02	<0.0005	0.1	<0.001	<0.005	0.012	0.015
	09/17/18	200.7/200.8	0.0019	0.052	<0.002	<0.006	<0.006	0.037	<0.0005	0.11	<0.001	<0.005	0.01	0.0068
	09/11/17	200.7/200.8	0.0024	0.053	<0.002	<0.006	<0.006	0.031	<0.0005	0.11	0.0026	<0.005	0.012	0.079
	09/09/16	200.7/200.8	0.0023	0.055	<0.002	<0.006	<0.006	0.68	<0.0005	0.12	0.0014	<0.005	0.012	0.0027
	08/11/15	200.7/200.9	<0.006	1.048	<0.003	<0.006	<0.006	<0.02	<0.0025	**1.089**	<0.005	<0.005	0.01	<0.02
	09/15/14	200.7/200.8	0.0024	0.047	<0.002	<0.006	<0.006	<0.02	<0.001	0.091	0.0017	<0.005	0.0098	<0.01
	09/04/13	200.7/200.8	<0.005	0.042	<0.002	<0.006	<0.006	<0.02	<0.005	0.1	<0.005	<0.005	<0.01	<0.01
	11/27/12	200.7/200.8	0.0019	0.052	<0.002	<0.006	<0.006	0.41	<0.005	0.093	<0.001	<0.005	0.0093	0.012
	08/23/12	200.7/200.8	0.0019	0.04	<0.002	<0.006	<0.006	<0.02	<0.005	0.051	<0.001	<0.005	0.0077	0.014
	06/13/12	200.7/200.8	0.0019	0.041	<0.002	<0.006	<0.006	<0.02	<0.005	0.081	<0.001	<0.005	0.0085	0.012
	03/22/12	200.7/200.8	0.0019	0.041	<0.002	<0.006	<0.006	<0.02	<0.005	0.082	<0.001	<0.005	0.0076	0.039
	12/15/11	200.7/200.8	0.0018	0.04	<0.002	<0.006	<0.006	<0.1	<0.005	0.079	<0.001	<0.005	0.0081	<0.01
	10/25/11	200.7/200.8	0.0019	0.041	<0.002	<0.006	<0.006	<0.02	<0.005	0.082	<0.001	<0.005	0.0074	<0.01
	06/20/11	200.7/200.8	0.0022	NA	<0.002	<0.006	NA	<0.02	<0.005	0.088	0.0013	<0.005	0.0075	0.021
	03/01/11	200.7/200.8	0.0026	0.039	<0.002	<0.006	<0.006	<0.02	<0.005	0.082	*<0.05**	<0.005	0.0069	0.081
	11/09/10	200.7/200.8	NA	0.037	<0.002	<0.006	<0.006	<0.02	<0.005	0.078	0.0014	<0.005	NA	<0.01
	09/27/10	6010B	<0.02	0.04	<0.002	<0.006	<0.006	<0.02	<0.005	0.081	*<0.05**	<0.005	0.006	0.064
	06/01/10	6010B	<0.02	0.04	<0.002	<0.006	<0.006	<0.02	<0.005	0.083	*<0.05**	<0.005	NA	<0.05
	03/16/10	6010B	<0.02	0.036	<0.002	<0.006	<0.006	<0.02	<0.005	0.076	*<0.05**	<0.005	0.00641	<0.05

8.5.3 OW-50, OW-52, OW-54, OW-55, OW-56, OW-57, OW-58, OW-63, OW-64
Dissolved Metals Analytical Result Summary

			PARAMETERS											
STANDARDS			Arsenic (mg/L)	Barium (mg/L)	Cadmium (mg/L)	Chromium (mg/L)	Copper (mg/L)	Iron (mg/L)	Lead (mg/L)	Manganese (mg/L)	Selenium (mg/L)	Silver (mg/L)	Uranium (mg/L)	Zinc (mg/L)
WQCC 20 NMAC 6.2.3103 (DEC 2018)			**0.01**	**2**	**0.005**	**0.05**	**1.0**	**1.0**	**0.015**	**0.2**	**0.05**	**0.05**	**0.03**	**10**
40 CFR 141.62 MCL			0.01	2	0.005	0.1	1.3	NE	0.015	NE	0.05	NE	0.03	NE
NMED TAP WATER (JUNE 2019)			0.000855	3.28	0.00624	0.0057	0.7898	13.8	NE	2.02	0.0987	0.0812	0.0592	5.96
EPA RSL for Tap Water (NOV 2019)			0.000052	3.8	0.0092	22	0.8	14	0.015	0.43	0.1	0.094	0.004	6
WELL ID	DATE SAMPLED	METHOD												
OW-52	10/15/19	200.7/200.8	0.00069	0.029	<0.002	<0.006	0.002	0.044	<0.0005	0.024	<0.001	<0.005	NA	0.012
	08/16/19	200.7/200.8	0.00067	0.28	<0.002	<0.006	0.0019	0.044	<0.0005	0.024	<0.001	<0.005	0.0098	0.019
	05/01/19	200.7/200.8	0.00062	0.029	<0.002	<0.006	0.0016	0.06	<0.0005	0.026	<0.001	<0.005	0.11	0.052
	03/27/19	200.7/200.8	0.00057	0.03	<0.002	<0.006	<0.006	0.049	<0.0005	0.024	<0.001	<0.005	0.0094	0.032
	11/07/18	200.7/200.8	0.00059	0.03	<0.002	<0.006	<0.006	0.048	<0.0005	0.024	<0.001	<0.005	0.01	0.016
	09/17/18	200.7/200.8	0.00062	0.031	<0.002	<0.006	<0.006	0.08	<0.0005	0.026	<0.001	<0.005	0.0086	0.007
	09/11/17	200.7/200.8	<0.005	0.029	<0.002	<0.006	<0.006	0.05	<0.0005	0.025	<0.005	<0.005	0.011	0.063
	09/09/16	200.7/200.8	0.00086	0.028	<0.002	<0.006	<0.006	0.05	<0.0005	0.026	<0.005	<0.005	0.011	<0.01
	08/11/15	200.7/200.9	<0.006	1.027	<0.003	<0.006	<0.006	**1.035**	<0.0026	0.031	<0.005	<0.005	0.011	<0.02
	09/15/14	200.7/200.8	<0.001	0.029	<0.002	<0.006	<0.006	0.051	<0.001	0.026	0.0012	<0.005	0.011	<0.01
	09/04/13	200.7/200.8	<0.005	0.026	<0.002	<0.006	<0.006	0.063	<0.005	0.038	<0.005	<0.005	0.011	<0.01
	11/27/12	200.7/200.8	<0.001	0.027	<0.002	<0.006	<0.006	0.066	<0.005	0.025	<0.001	<0.005	0.011	0.011
	08/23/12	200.7/200.8	<0.001	0.022	<0.002	<0.006	<0.006	<0.02	<0.005	0.0054	<0.001	<0.005	0.0072	0.039
	06/13/12	200.7/200.8	<0.001	0.026	<0.002	<0.006	<0.006	0.076	<0.005	0.023	<0.001	<0.005	0.011	0.023
	03/22/12	200.7/200.8	<0.001	0.025	<0.002	<0.006	<0.006	0.071	<0.005	0.03	<0.001	<0.005	0.01	0.084
	12/13/11	200.7/200.8	<0.001	0.025	<0.002	<0.006	<0.006	0.08	<0.005	0.025	<0.001	<0.005	0.01	<0.01
	10/25/11	200.7/200.8	<0.001	0.025	<0.002	<0.006	<0.006	0.12	<0.005	0.031	<0.001	<0.005	0.011	<0.01
	06/20/11	200.7/200.8	<0.001	NA	<0.002	<0.006	NA	0.12	<0.005	0.037	0.0015	<0.005	0.013	0.024
	03/01/11	200.7/200.8	<0.001	0.36	*<0.02**	<0.006	<0.006	0.064	<0.005	**0.68**	*<0.05**	<0.005	0.0071	<0.01
	11/09/10	200.7/200.8	NA	0.025	*<0.02**	<0.006	<0.006	0.048	<0.005	0.027	NA	<0.005	NA	<0.01
	09/27/10	6010B	<0.02	0.026	<0.002	<0.006	<0.006	0.058	<0.005	0.031	*<0.05**	<0.005	0.009	0.079
	06/01/10	6010B	<0.02	0.026	<0.002	<0.006	<0.006	0.058	<0.005	0.032	*<0.05**	<0.005	0.00926	<0.05
	03/16/10	6010B	<0.02	0.023	<0.002	<0.006	<0.006	0.034	<0.005	0.028	*<0.05**	<0.005	0.0092	<0.05
OW-53	10/15/19	--	Dry											
	08/21/19	--	Dry											
	05/02/19	--	Dry											
	02/06/19	--	Dry											
OW-54	10/15/19	--	SPH											

8.5.3 OW-50, OW-52, OW-54, OW-55, OW-56, OW-57, OW-58, OW-63, OW-64
Dissolved Metals Analytical Result Summary

			PARAMETERS											
STANDARDS			Arsenic (mg/L)	Barium (mg/L)	Cadmium (mg/L)	Chromium (mg/L)	Copper (mg/L)	Iron (mg/L)	Lead (mg/L)	Manganese (mg/L)	Selenium (mg/L)	Silver (mg/L)	Uranium (mg/L)	Zinc (mg/L)
WQCC 20 NMAC 6.2.3103 (DEC 2018)			**0.01**	**2**	**0.005**	**0.05**	**1.0**	**1.0**	**0.015**	**0.2**	**0.05**	**0.05**	**0.03**	**10**
40 CFR 141.62 MCL			0.01	2	0.005	0.1	1.3	NE	0.015	NE	0.05	NE	0.03	NE
NMED TAP WATER (JUNE 2019)			0.000855	3.28	0.00624	0.0057	0.7898	13.8	NE	2.02	0.0987	0.0812	0.0592	5.96
EPA RSL for Tap Water (NOV 2019)			0.000052	3.8	0.0092	22	0.8	14	0.015	0.43	0.1	0.094	0.004	6
WELL ID	DATE SAMPLED	METHOD												
	08/21/19	200.7/200.8	0.0028	0.15	<0.002	<0.006	0.0039	0.48	0.0058	**1.4**	<0.001	<0.005	**0.047**	0.0066
	05/02/19	200.7/200.8	0.0031	0.15	<0.002	<0.006	0.005	0.67	0.0054	**1.5**	<0.005	<0.005	**0.051**	0.048
	02/06/19	200.7/200.8	0.0039	0.16	<0.002	<0.006	<0.006	0.47	0.0082	**1.4**	<0.001	<0.005	**0.058**	0.026
	11/07/18	200.7/200.8	0.0026	0.15	<0.002	<0.006	<0.006	0.32	0.01	**1.5**	<0.001	<0.005	**0.059**	0.025
	08/28/18	200.7/200.8	0.0045	0.15	<0.002	<0.006	0.011	0.3	0.0097	**1.3**	<0.001	0.0023	**0.055**	0.01
	05/08/18	200.7/200.8	0.0024	0.15	<0.002	<0.006	0.0075	0.33	0.0065	**1.4**	<0.005	<0.005	**0.057**	0.0084
	02/22/18	200.7/200.8	*<0.2**	0.14	<<0.01	<0.006	0.022	0.24	**0.016**	**1.3**	*<0.2**	<0.025	**0.053**	0.0084
	12/06/17	200.7/200.8	0.0057	0.15	<0.002	<0.006	0.0077	0.31	0.0083	**1.4**	*<0.05**	<0.005	**0.061**	0.011
	09/11/17	200.7/200.8	0.0074	0.2	<0.002	<0.006	<0.006	0.75	0.0068	**1.5**	0.015	<0.005	**0.055**	0.025
	06/21/17	200.7/200.8	0.0078	0.14	<0.002	<0.006	0.0055	0.63	0.0049	**1.2**	0.014	<0.005	**0.055**	0.0062
	03/29/17	200.7/200.8	0.0041	0.22	<0.002	<0.006	0.012	0.72	0.0081	**1.5**	<0.02	<0.005	**0.059**	0.016
OW-55	10/15/19	--							SPH					
	08/21/19	--							SPH					
	05/02/19	200.7/200.8	0.0047	0.57	<0.002	<0.006	<0.006	**4.4**	0.00049	**3.8**	0.001	0.0015	0.0038	0.033
	02/06/19	200.7/200.8	0.0053	0.54	<0.002	<0.006	<0.006	**4**	<0.0005	**3.7**	<0.001	<0.005	0.0071	0.021
	11/07/18	200.7/200.8	0.0044	0.5	<0.002	<0.006	<0.006	**3.4**	<0.0005	**3.5**	<0.001	<0.005	0.0051	0.015
	08/28/18	200.7/200.8	0.0044	0.51	<0.002	<0.006	<0.006	**3.4**	<0.0005	**3.6**	<0.001	0.003	0.0037	0.013
	05/08/18	200.7/200.8	0.0043	0.52	<0.002	<0.006	<0.006	**3.7**	<0.0025	**4**	<0.005	<0.005	0.0036	0.0065
	02/22/18	200.7/200.8	*<0.2**	0.46	*<0.01**	<0.006	<0.03	**3.3**	<0.0025	**3.7**	*<0.2**	<0.025	0.0036	0.01
	12/06/17	200.7/200.8	0.0051	0.48	<0.002	<0.006	<0.006	**3.7**	<0.0005	**3.9**	0.0047	0.0019	0.0041	0.013
	09/11/17	200.7/200.8	0.0075	0.67	<0.002	<0.006	<0.006	**5.3**	0.0014	**3.9**	0.0086	<0.005	0.0042	0.022
	06/21/17	200.7/200.8	0.006	0.56	<0.002	<0.006	<0.006	**4.2**	0.00029	**3.7**	0.0056	<0.005	0.004	0.0082
	03/29/17	200.7/200.8	0.0058	0.63	<0.002	<0.006	<0.006	**5**	0.00091	**4.2**	0.0047	<0.005	0.0047	0.0083

8.5.3 OW-50, OW-52, OW-54, OW-55, OW-56, OW-57, OW-58, OW-63, OW-64
Dissolved Metals Analytical Result Summary

			PARAMETERS											
STANDARDS			Arsenic (mg/L)	Barium (mg/L)	Cadmium (mg/L)	Chromium (mg/L)	Copper (mg/L)	Iron (mg/L)	Lead (mg/L)	Manganese (mg/L)	Selenium (mg/L)	Silver (mg/L)	Uranium (mg/L)	Zinc (mg/L)
WQCC 20 NMAC 6.2.3103 (DEC 2018)			**0.01**	**2**	**0.005**	**0.05**	**1.0**	**1.0**	**0.015**	**0.2**	**0.05**	**0.05**	**0.03**	**10**
40 CFR 141.62 MCL			0.01	2	0.005	0.1	1.3	NE	0.015	NE	0.05	NE	0.03	NE
NMED TAP WATER (JUNE 2019)			0.000855	3.28	0.00624	0.0057	0.7898	13.8	NE	2.02	0.0987	0.0812	0.0592	5.96
EPA RSL for Tap Water (NOV 2019)			0.000052	3.8	0.0092	22	0.8	14	0.015	0.43	0.1	0.094	0.004	6
WELL ID	**DATE SAMPLED**	**METHOD**												
OW-56	10/15/19	200.7/200.8	0.0023	0.32	<0.002	<0.006	0.0086	0.016	0.000098	0.081	0.00034	0.0026	NA	0.022
	08/21/19	200.7/200.8	0.0019	0.36	<0.002	<0.006	0.0082	0.011	0.00012	0.068	0.00037	0.0015	0.015	0.0098
	05/02/19	200.7/200.8	0.0015	0.24	<0.002	<0.006	0.0065	0.041	<0.0025	0.064	<0.005	0.0019	0.016	0.046
	02/06/19	200.7/200.8	0.0015	0.24	<0.002	*<0.06**	0.0065	0.041	<0.0025	0.064	<0.005	0.0019	0.016	0.046
	11/07/18	200.7/200.8	0.0022	0.45	<0.002	<0.006	<0.006	0.13	0.00022	0.18	<0.001	<0.005	0.015	0.022
	08/28/18	200.7/200.8	0.0022	0.39	<0.002	<0.006	0.0061	0.6	0.00058	0.12	<0.001	0.0027	0.016	0.011
	05/08/18	200.7/200.8	0.0023	0.34	<0.002	<0.006	0.0083	<0.02	<0.0025	0.031	<0.005	<0.005	0.017	0.0075
	02/22/18	200.7/200.8	*<0.2**	0.38	<0.002	<0.03	0.0098	1	<0.0025	0.13	*<0.2**	0.0018	0.016	0.017
	12/06/17	200.7/200.8	0.0046	0.34	<0.002	<0.006	0.009	<0.02	0.00038	0.048	0.012	<0.005	0.021	0.012
	09/11/17	200.7/200.8	0.0066	0.36	<0.002	0.0017	0.0057	0.048	0.00023	0.09	0.013	<0.005	0.018	0.04
	06/21/17	200.7/200.8	0.0054	0.26	<0.002	0.0014	0.011	0.026	<0.0005	0.073	0.014	<0.005	0.021	0.063
	03/29/17	200.7/200.8	0.0035	0.3	<0.002	<0.006	0.0066	0.085	0.00041	0.1	<0.02	<0.005	0.022	0.039
OW-57	11/05/19	200.7/200.8	0.0029	**4.0**	<0.002	<0.006	<0.006	**3.3**	<0.0005	**2.2**	<0.001	0.0024	0.00019	0.022
	08/21/19	200.7/200.8	0.0037	**3.8**	<0.002	<0.006	0.0026	**4.1**	0.000071	**2.2**	<0.001	0.002	0.00026	0.0068
	05/16/19	200.7/200.8	0.0029	**3.6**	<0.002	<0.006	0.0041	**2.5**	<0.0005	**2.1**	0.00022	0.0024	0.00033	0.02
	02/20/19	200.7/200.8	0.0032	**3.7**	<0.002	<0.006	0.0016	**2.3**	0.000069	**2.1**	<0.001	0.0018	0.00042	0.03
	11/29/18	200.7/200.8	0.004	**3.2**	<0.002	<0.006	<0.006	**3.4**	<0.0005	**2.3**	<0.001	<0.005	0.00089	0.018
	08/28/18	200.7/200.8	0.004	**3.6**	<0.002	<0.006	<0.006	**3.3**	<0.0005	**2.1**	<0.001	0.0028	0.00042	0.013
	05/08/18	200.7/200.8	<0.005	**3.8**	<0.002	<0.006	<0.006	**2.8**	<0.0025	**2.2**	<0.005	0.0019	<0.0025	0.0069
	02/20/18	200.7/200.8	0.0045	**3.5**	<0.002	<0.006	<0.006	**2.6**	<0.005	**2.1**	0.0047	0.0031	0.00062	0.0063
	12/06/17	200.7/200.8	0.0062	**3.2**	<0.002	<0.006	<0.006	**2**	<0.0005	**2.1**	0.0077	0.0019	0.00089	0.0091
	09/19/17	200.7/200.8	0.0077	**3.4**	<0.002	<0.006	<0.006	**6.4**	<0.0005	**2.2**	0.015	<0.005	NA	0.031
	06/21/17	200.7/200.8	0.0067	**2.9**	<0.002	<0.006	<0.006	**1.3**	0.00032	**1.9**	0.013	<0.005	0.0025	0.014
	03/30/17	200.7/200.8	0.0084	1.4	<0.002	<0.006	<0.006	0.5	0.00053	**0.69**	<0.02	<0.005	0.0028	0.03

8.5.3 OW-50, OW-52, OW-54, OW-55, OW-56, OW-57, OW-58, OW-63, OW-64
Dissolved Metals Analytical Result Summary

			PARAMETERS											
STANDARDS			Arsenic (mg/L)	Barium (mg/L)	Cadmium (mg/L)	Chromium (mg/L)	Copper (mg/L)	Iron (mg/L)	Lead (mg/L)	Manganese (mg/L)	Selenium (mg/L)	Silver (mg/L)	Uranium (mg/L)	Zinc (mg/L)
WQCC 20 NMAC 6.2.3103 (DEC 2018)			**0.01**	**2**	**0.005**	**0.05**	**1.0**	**1.0**	**0.015**	**0.2**	**0.05**	**0.05**	**0.03**	**10**
40 CFR 141.62 MCL			0.01	2	0.005	0.1	1.3	NE	0.015	NE	0.05	NE	0.03	NE
NMED TAP WATER (JUNE 2019)			0.000855	3.28	0.00624	0.0057	0.7898	13.8	NE	2.02	0.0987	0.0812	0.0592	5.96
EPA RSL for Tap Water (NOV 2019)			0.000052	3.8	0.0092	22	0.8	14	0.015	0.43	0.1	0.094	0.004	6
WELL ID	DATE SAMPLED	METHOD												
OW-58	11/18/19	200.7/200.8	0.0026	**4.5**	<0.002	<0.006	<0.006	**8.7**	<0.0005	**2**	0.00031	0.0016	0.00014	0.029
	08/22/19	200.7/200.8	0.0028	**4.2**	<0.002	<0.006	<0.006	**8.4**	0.0001	**1.9**	0.0003	0.0012	0.00025	0.0029
	06/05/19	200.7/200.8	0.0024	**4.2**	<0.002	<0.006	<0.006	**7.9**	<0.0005	**2**	0.00027	0.0011	0.00015	0.0029
	03/28/19	200.7/200.8	0.0029	**4**	<0.002	<0.006	<0.006	**7.8**	<0.0005	**1.9**	0.00022	<0.005	0.00016	0.029
	11/29/18	200.7/200.8	0.003	**4**	<0.002	<0.006	<0.006	**7**	<0.0005	**2**	<0.001	0.0021	0.00022	0.02
	08/28/18	200.7/200.8	0.0028	**3.8**	<0.002	<0.006	<0.006	**7.4**	<0.0005	**1.9**	<0.001	0.0026	0.00017	0.013
	05/08/18	200.7/200.8	0.0028	**4.2**	<0.002	<0.006	<0.006	**7**	<0.0025	**2**	<0.005	0.0019	<0.0025	0.0095
	02/20/18	200.7/200.8	0.0036	**3.9**	<0.002	<0.006	<0.0006	**7.1**	<0.0005	**1.9**	0.0049	0.0026	0.00022	0.0058
	12/06/17	200.7/200.8	0.0045	**3.8**	<0.002	<0.006	<0.006	**7.1**	<0.0005	**1.9**	0.0069	0.002	0.00022	0.0076
	09/19/17	200.7/200.8	0.007	**4**	<0.002	<0.006	<0.006	**7.5**	0.00017	**1.9**	0.015	<0.005	NA	0.018
	06/21/17	200.7/200.8	0.0059	**3.5**	<0.002	<0.006	<0.006	**6.9**	0.00033	**1.7**	0.01	<0.005	0.0004	0.013
	03/29/17	200.7/200.8	0.0035	**4.1**	<0.002	<0.006	<0.006	**7.7**	0.00043	**1.9**	<0.02	<0.005	0.00082	0.034
OW-58A	12/03/19	200.7/200.8	0.0044	0.94	<0.002	<0.006	NA	**5.5**	0.0016	**1.3**	0.0002	<0.005	NA	0.018
OW-61	11/04/19	--												
	08/20/19	--												
	05/15/19	--												
	02/19/19	--												
OW-63	11/18/19	200.7/200.8	0.0097	**4.5**	<0.002	<0.006	<0.006	**5.7**	<0.0005	**1.1**	<0.001	<0.005	0.00025	0.023
	08/19/19	200.7/200.8	0.01	**4.1**	<0.002	<0.006	0.002	**6.1**	<0.0005	**1**	<0.001	<0.005	<0.0005	0.0055
	05/15/19	200.7/200.8	0.01	**3.9**	<0.002	<0.006	<0.006	**5.9**	<0.0005	**1**	0.0002	0.0015	0.00013	0.014
	02/20/19	200.7/200.8	**0.011**	**3.8**	<0.002	<0.006	<0.006	**5.2**	<0.0005	**1.1**	<0.001	0.00095	0.0004	0.036
	12/03/18	200.7/200.8	**0.011**	**3.7**	<0.002	<0.006	<0.006	**5.3**	<0.0005	**0.93**	<0.001	<0.005	NA	0.031
	08/22/18	200.7/200.8	**0.011**	**3.9**	<0.002	<0.006	<0.006	**5.8**	<0.0005	**1.2**	<0.001	0.0022	0.0002	0.011
	04/29/18	200.7/200.8	**0.012**	**4**	<0.002	<0.006	<0.006	**5.5**	<0.0005	**0.92**	<0.001	<0.005	<0.0005	0.011

8.5.3 OW-50, OW-52, OW-54, OW-55, OW-56, OW-57, OW-58, OW-63, OW-64
Dissolved Metals Analytical Result Summary

STANDARDS			PARAMETERS											
			Arsenic (mg/L)	Barium (mg/L)	Cadmium (mg/L)	Chromium (mg/L)	Copper (mg/L)	Iron (mg/L)	Lead (mg/L)	Manganese (mg/L)	Selenium (mg/L)	Silver (mg/L)	Uranium (mg/L)	Zinc (mg/L)
WQCC 20 NMAC 6.2.3103 (DEC 2018)			**0.01**	**2**	**0.005**	**0.05**	**1.0**	**1.0**	**0.015**	**0.2**	**0.05**	**0.05**	**0.03**	**10**
40 CFR 141.62 MCL			0.01	2	0.005	0.1	1.3	NE	0.015	NE	0.05	NE	0.03	NE
NMED TAP WATER (JUNE 2019)			0.000855	3.28	0.00624	0.0057	0.7898	13.8	NE	2.02	0.0987	0.0812	0.0592	5.96
EPA RSL for Tap Water (NOV 2019)			0.000052	3.8	0.0092	22	0.8	14	0.015	0.43	0.1	0.094	0.004	6
WELL ID	**DATE SAMPLED**	**METHOD**												
OW-64 [3]	11/18/19	200.7/200.8	0.0033	0.28	<0.002	<0.006	<0.006	0.067	0.000092	**0.35**	0.0003	<0.005	0.018	0.024
	08/19/19	200.7/200.8	0.0037	0.27	<0.002	<0.006	0.0033	0.076	0.000082	**0.35**	0.00036	<0.005	0.012	0.0073
	05/15/19	200.7/200.8	0.0041	0.34	<0.002	<0.006	0.0054	0.11	0.00026	**0.48**	0.00035	<0.005	0.016	0.027
	02/20/19				SPH									
	12/03/18				SPH									
	08/22/18	200.7/200.8	0.0068	0.33	<0.002	<0.006	<0.006	0.17	0.00019	**0.34**	<0.001	<0.005	0.012	0.011
	04/29/18	200.7/200.8	0.0089	0.35	<0.002	<0.006	0.009	0.93	0.0034	**0.44**	<0.001	<0.005	0.026	<0.01
OW-65	11/04/19	--												
	08/20/19	--												
	05/15/19	--												
	02/19/19	--												

DEFINITIONS

NA = Not analyzed; NE = Not established

Bold and highlighted values represent values above the applicable standards

STANDARDS

WQCC 20 NMAC 6.2.3103 - Standards for Ground Water of 10,000 mg/l TDS Concentration or Less.

a) Human Health Standards; b) Other Standards for Domestic Water

40 CFR 141.62 Maximum Contaminant Levels for Inorganic Contaminants

NMED Risk Assessment Guidance for Investigations and Remediations Table A-1

EPA Regional Screening Level (RSL) Summary Table

NOTES

Wells marked in red were not sampled because SPH was present in the well or the well was dry

Items notes with a * and italics have a detection limit greater than or equal to the applicable standard.

1) *Sampling frequency changed to annual per concurrence by NMED in Comment 6 of NMED Disapproval Facility Wide Ground Water Monitoring Work Plan 2011 Updates, 9/24/12.*
2) *No samples collected - dedicated recovery system installed on well.*
3) *OW-64 - No samples collected in the 4th Quarter 2018 and 1st Quarter 2019 - SPH detected.*

8.5.4 OW-50, OW-52, OW-54, OW-55, OW-56, OW-57, OW-58, OW-63, OW-64
Semi-Volatile Organic Compound Analytical Result Summary

			PARAMETERS																		
STANDARDS			Acenaphthene (mg/L)	Benzoic Acid (mg/L)	Bis(2-ethylhexyl) phthalate (mg/L)	Carbazole (mg/L)	Di-n-octyl phthalate (mg/L)	Dimethyl phthalate (mg/L)	2,4-Dimethyl-phenol (mg/L)	Fluorene (mg/L)	Fluoran thene (mg/L)	1-Methyl naphthalene (mg/L)	2-Methyl naphthalene (mg/L)	2-Methyl-phenol (mg/L)	3+4-Methyl-phenol (mg/L)	Naphthalene (mg/L)	Phenanthrene (mg/L)	Phenol (mg/L)	Pyrene (mg/L)	1,4-Dioxane (mg/L)	Dibenzo furan (mg/L)
WQCC 20NMAC 6.2.3103 (DECEMBER 2018)			NE	NE	NE	NE	NE	NE	NE	NE	NE	NE	NE	NE	NE	**0.03**	NE	**0.005**	NE	NE	NE
40 CFR 141.62 MCL			NE	NE	**0.006**	NE	NE	NE	NE	NE	NE	NE	NE	NE	NE	NE	NE	NE	NE	NE	NE
NMED TAP WATER (JUNE 2019)			**0.535**	NE	0.0556	NE	NE	**0.612**	**0.354**	**0.288**	**0.802**	**0.0114**	**0.035**	NE	NE	0.00165	**0.17**	5.76	**0.117**	**0.00459**	NE
EPA RSL for Tap Water (NOV 2019)			0.53	**75**	0.056	NE	**0.2**	NE	0.36	0.29	0.8	0.011	0.036	**0.93**	**0.93**	0.0017	NE	5.8	0.12	0.0046	**0.0079**
Well ID	**DATE SAMPLED**	**METHOD**																			
OW-50	03/27/19	8270C		0.0067	*<0.01**																
	08/11/15	8270C		<0.02	*<0.01**																
	09/15/14	8270C		<0.02	*<0.01**																
	09/04/13 [1]	8270C		<0.04	*<0.01**																
	11/27/12	8270C		<0.02	*<0.01**																
	08/23/12	8270C		<0.02	*<0.01**																
	06/13/12	8270C		<0.02	*<0.01**																
	03/22/12	8270C		<0.02	*<0.01**																
	12/15/11	8270C		<0.02	*<0.01**																
	10/25/11	8270C		<0.02	*<0.01**																
	06/20/11	8270C		<0.02	*<0.01**																
	03/01/11	8270C		<0.02	*<0.01**																
	11/09/10	8270C		<0.02	*<0.01**																
	09/27/10	8270C		<0.02	*<0.01**																
	06/01/10	8270C		<0.02	*<0.01**																
	03/16/10	8270C		0.02	**0.011**																
OW-52	05/02/19	8270C		<0.02	*<0.01**							<0.01				<0.01					
	03/27/19	8270C		0.0066	*<0.01**							<0.01				<0.01					
	08/11/15	8270C		<0.02	*<0.01**							*<0.02**				<0.01					
	09/15/14	8270C		0.016	*<0.01**							<0.01				<0.01					
	09/04/13 [1]	8270C		0.0094	*<0.01**							<0.01				<0.01					
	11/27/12	8270C										*<0.02**				<0.01					
	08/23/12	8270C										*<0.02**				<0.01					
	06/13/12	8270C										0.00098				0.0017					
	03/22/12	8270C										0.00063				0.0015					
OW-53	10/15/29	--											Dry								
	08/21/19	--											Dry								
	05/02/19	--											Dry								
	02/06/19	--											Dry								
OW-54	10/15/19	--											SPH								
	08/21/19	8270C	<0.01	<0.01	*<0.01**			<0.01	<0.01	<0.01		<0.01	<0.01	<0.01	<0.01	<0.01	<0.01	*<0.01**			
	05/02/19	8270C	<0.01	<0.02	*<0.01**			<0.01	<0.01	<0.01		<0.01	<0.01	<0.01	<0.01	<0.01	<0.01	*<0.01**			
	02/06/19	8270C	<0.01	<0.02	0.01			<0.01	<0.01	<0.01		<0.01	<0.01	<0.01	<0.01	<0.01	<0.01	*<0.01**			
	11/07/18	8270C	<0.01	0.018	0.01			<0.01	<0.01	<0.01		<0.01	<0.01	<0.01	<0.01	<0.01	<0.01	*<0.01**			
	08/28/18	8270C	<0.01	0.011	*<0.01**			<0.01	<0.01	<0.01		<0.01	<0.01	<0.01	<0.01	<0.01	<0.01	*<0.01**			
	05/08/18	8270C	<0.01	0.016	*<0.01**			<0.01	<0.01	<0.01		<0.01	<0.01	<0.01	<0.01	<0.01	<0.01	*<0.01**			
	02/22/18	8270C	<0.01	0.0094	*<0.01**			<0.01	<0.01	<0.01		<0.01	<0.01	<0.01	<0.01	<0.01	<0.01	*<0.01**			
OW-55	10/15/19	--											SPH								
	08/21/19	--											SPH								
	05/02/19	8270C	<0.01	<0.02	*<0.01**			<0.01	<0.01	<0.01		**0.017**	0.0069	<0.01	<0.01	0.026	<0.01	**0.034**			
	02/06/19	8270C	<0.01	<0.02	*<0.01**			<0.01	<0.01	<0.01		**0.016**	<0.01	<0.01	<0.01	0.02	<0.01	**0.026**			
	11/07/18	8270C	<0.01	<0.02	*<0.01**			<0.01	<0.01	<0.01		**0.015**	<0.01	<0.01	<0.01	0.016	<0.01	**0.019**			
	08/28/18	8270C	<0.01	0.011	*<0.01**			<0.01	<0.01	<0.01		0.008	<0.01	<0.01	<0.01	0.011	<0.01	**0.015**			
	05/08/18	8270C	<0.01	0.017	*<0.01**			<0.01	<0.01	<0.01		**0.014**	<0.01	<0.01	<0.01	0.017	<0.01	**0.02**			
	02/22/18	8270C	<0.01	<0.02	*<0.01**			<0.01	<0.01	<0.01		**0.019**	<0.01	<0.01	<0.01	0.021	<0.01	**0.037**			
OW-56	10/15/19	8270C	<0.01	<0.02	*<0.01**			<0.01	<0.01	<0.01		<0.01	<0.01	<0.01	<0.01	<0.01	<0.01	*<0.01**			
	08/21/19	8270C	<0.01	<0.02	*<0.01**			<0.01	<0.01	<0.01		<0.01	<0.01	<0.01	<0.01	<0.01	<0.01	*<0.01**			
	05/02/19	8270C	<0.01	<0.02	*<0.01**			<0.01	<0.01	<0.01		<0.01	<0.01	<0.01	<0.01	<0.01	<0.01	*<0.01**			
	02/06/19	8270C	<0.01	<0.02	*<0.01**			<0.01	<0.01	<0.01		<0.01	<0.01	<0.01	<0.01	<0.01	<0.01	*<0.01**			
	11/07/18	8270C	<0.01	<0.02	*<0.01**			<0.01	<0.01	<0.01		<0.01	<0.01	<0.01	<0.01	<0.01	<0.01	*<0.01**			
	08/28/18	8270C	<0.01	0.0068	*<0.01**			<0.01	<0.01	<0.01		<0.01	<0.01	<0.01	<0.01	<0.01	<0.01	*<0.01**			
	05/08/18	8270C	<0.01	0.014	*<0.01**			<0.01	<0.01	<0.01		<0.01	<0.01	<0.01	<0.01	<0.01	<0.01	*<0.01**			
	02/22/18	8270C	<0.01	0.0086	*<0.01**			<0.01	<0.01	<0.01		<0.01	<0.01	<0.01	<0.01	<0.01	<0.01	*<0.01**			

8.5.4 OW-50, OW-52, OW-54, OW-55, OW-56, OW-57, OW-58, OW-63, OW-64
Semi-Volatile Organic Compound Analytical Result Summary

			PARAMETERS																		
STANDARDS			Acenaphthene (mg/L)	Benzoic Acid (mg/L)	Bis(2-ethylhexyl) phthalate (mg/L)	Carbazole (mg/L)	Di-n-octyl phthalate (mg/L)	Dimethyl phthalate (mg/L)	2,4-Dimethyl-phenol (mg/L)	Fluorene (mg/L)	Fluoran thene (mg/L)	1-Methyl naphthalene (mg/L)	2-Methyl naphthalene (mg/L)	2-Methyl-phenol (mg/L)	3+4-Methyl-phenol (mg/L)	Naphthalene (mg/L)	Phenanthrene (mg/L)	Phenol (mg/L)	Pyrene (mg/L)	1,4-Dioxane (mg/L)	Dibenzo furan (mg/L)
WQCC 20NMAC 6.2.3103 (DECEMBER 2018)			NE	NE	NE	NE	NE	NE	NE	NE	NE	NE	NE	NE	NE	**0.03**	NE	**0.005**	NE	NE	NE
40 CFR 141.62 MCL			NE	NE	**0.006**	NE	NE	NE	NE	NE	NE	NE	NE	NE	NE	NE	NE	NE	NE	NE	NE
NMED TAP WATER (JUNE 2019)			**0.535**	NE	0.0556	NE	NE	**0.612**	**0.354**	**0.288**	**0.802**	**0.0114**	**0.035**	NE	NE	0.00165	**0.17**	5.76	**0.117**	**0.00459**	NE
EPA RSL for Tap Water (NOV 2019)			0.53	**75**	0.056	NE	**0.2**	NE	0.36	0.29	0.8	0.011	0.036	**0.93**	**0.93**	0.0017	NE	5.8	0.12	0.0046	**0.0079**
Well ID	DATE SAMPLED	METHOD																			
OW-57	11/05/19	8270C	0.00154	<0.01	<0.0005	<0.0005		<0.0005	0.00686	0.0024		**0.12**	**0.0625**	<0.0005	0.00103	**0.142**	0.00746	**0.0913**			
	08/21/19	8270C	<0.01	<0.02	*<0.01**	0.005		<0.01	<0.01	0.0039		**0.11**	**0.047**	<0.01	<0.01	**0.11**	<0.01	**0.029**			
	05/16/19	8270C	<0.01	<0.04	*<0.02**			<0.02	<0.02	0.0084		**0.079**	**0.038**	<0.02	<0.02	**0.08**	<0.02	**0.036**			
	02/20/19	8270C	<0.01	0.036	*<0.01**			<0.01	<0.01	<0.01		**0.097**	0.03	<0.01	<0.01	**0.089**	<0.01	**0.058**			
	11/29/18	8270C	<0.01	0.037	*<0.01**			<0.01	<0.01	<0.01		**0.054**	0.013	<0.01	<0.01	**0.051**	<0.01	**0.024**			
	08/28/18	8270C	<0.01	0.038	*<0.01**			<0.01	<0.01	<0.01		**0.089**	0.016	<0.01	<0.01	**0.073**	<0.01	**0.068**			
	05/08/18	8270C	<0.01	0.019	*<0.01**			<0.01	<0.01	<0.01		**0.038**	<0.01	<0.01	<0.01	0.025	<0.01	**0.027**			
	02/20/18	8270C	0.0053	0.043	*<0.01**			<0.01	<0.01	0.006		**0.098**	0.029	<0.01	<0.01	**0.073**	0.0063	**0.067**			
OW-58	11/18/19	8270C/8310	0.00226	<0.01	*<0.1**	0.00317	<0.01	<0.1	0.0124	0.00365		**0.0862**	**0.0723**	<0.1	<0.1	**0.177**	0.00357	*<0.1**		0.00326	0.00137
	08/22/19	8270C	<0.01	<0.02	*<0.01**		<0.01	<0.01	<0.01	0.003		**0.087**	**0.053**	<0.01	0.0052	**0.14**	<0.01	**0.083**			
	06/05/19	8270C	<0.01	0.025	0.0056		0.0052	<0.01	<0.01	0.0049		**0.085**	**0.061**	<0.01	0.0068	**0.14**	<0.01	**0.062**			
	03/28/19	8270C	<0.1	<0.02	*<0.1**			<0.1	<0.1	<0.1		**0.069**	**0.051**	<0.01	<0.01	**0.11**	<0.01	**0.051**			
	11/29/18	8270C	<0.1	0.17	*<0.1**			<0.1	<0.1	<0.1		*<0.1**	*<0.1**	<0.1	<0.1	*<0.1**	<0.1	*<0.1**			
	08/28/18	8270C	<0.01	0.023	*<0.01**			<0.01	<0.01	<0.01		**0.074**	**0.053**	<0.01	0.0054	**0.11**	<0.01	**0.052**			
	05/08/18	8270C	<0.01	0.025	*<0.01**			<0.01	<0.01	<0.01		**0.074**	**0.042**	<0.01	0.0071	**0.099**	<0.01	**0.05**			
	02/20/18	8270C	<0.01	0.023	*<0.01**			0.0037	<0.01	0.0049		**0.09**	**0.068**	<0.01	0.0057	**0.12**	0.0048	**0.052**			
OW-58A	12/03/19	8270D	0.00645	<0.005	<0.0025	<0.0025	<0.0025	<0.0025	0.0205	0.00786	<0.0025	**0.144**	**0.202**	0.0287	0.0209	**0.247**	0.00657	**0.0904**	<0.0025	0.00125	0.00301
OW-61	11/04/19	--										SPH									
	08/20/19	--										SPH									
	05/15/19	--										SPH									
	02/19/19	--										SPH									
OW-63	11/18/19	8270C/8310	<0.0025	<0.0025	<0.0025	0.00658		<0.0025	0.0129	0.00132		**0.0779**	**0.134**	<0.0025	<0.0025	**0.351**	0.00137	**0.0445**			
	08/19/19	8270C	<0.01	<0.02	*<0.01**	0.0042		<0.01	0.0089	<0.01		**0.05**	**0.061**	<0.01	<0.01	**0.18**	<0.01	**0.018**			
	05/15/19	8270C	<0.02	<0.04	*<0.02**	0.0064		<0.02	0.016	0.0065		**0.084**	**0.093**	<0.02	<0.02	**0.26**	<0.02	**0.025**			
	02/20/19	8270C	<0.01	0.037	*<0.01**			<0.01	0.011	<0.01		**0.064**	**0.07**	<0.01	<0.01	**0.18**	<0.01	**0.023**			
	12/03/18	8270C	<0.05	0.12	*<0.05**			<0.05	<0.05	<0.05		**0.075**	**0.088**	<0.05	<0.01	**0.23**	<0.05	*<0.05**			
	08/22/18	8270C	<0.01	0.039	*<0.01**			<0.01	0.017	<0.01		**0.077**	**0.091**	<0.01	<0.01	**0.21**	<0.01	**0.025**			
	04/29/18	8270C	<0.01	<0.02	*<0.01**			<0.01	0.013	<0.01		**0.057**	**0.069**	<0.01	<0.01	**0.19**	<0.01	**0.017**			
OW-64 [3]	11/18/19	8270C/8310	0.00015	<0.0005	<0.0005			<0.0005	0.0004	0.00021	0.00022	0.00189	0.00033	<0.0005	<0.0005	0.00232	0.0004	<0.0005	0.00018		
	08/19/19	8270C	<0.01	<0.02	*<0.01**			<0.01	<0.01	<0.01		<0.01	<0.01	<0.01	<0.01	0.0043	<0.01	*<0.01**			
	05/15/19	8270C	<0.01	0.011	0.0043			<0.01	0.0094	<0.01		0.0046	<0.01	<0.01	<0.01	0.0053	<0.01	*<0.01**			
	02/20/19				SPH																
	12/03/18				SPH																
	08/22/18	8270C	<0.01	0.011	*<0.01**			<0.01	0.024	<0.01		0.0091	<0.01	0.0099	<0.01	0.017	<0.01	*<0.01**			
	04/29/18	8270C	<0.01	<0.02	*<0.01**			<0.01	<0.01	<0.01		<0.01	<0.01	0.031	<0.01	0.018	<0.01	*<0.01**			
OW-65	11/04/19	--										SPH									
	08/20/19	--										SPH									
	05/15/19	--										SPH									
	02/19/19	--										SPH									

DEFINITIONS
NA = Not analyzed; NE = Not established
Bold and highlighted values represent values above the applicable standards
STANDARDS
WQCC 20 NMAC 6.2.3103 - Standards for Ground Water of 10,000 mg/l TDS Concentration or Less.
a) Human Health Standards; b) Other Standards for Domestic Water
40 CFR 141.62 Detection Limits for Inorganic Contaminants
EPA Regional Screening Level (RSL) Summary Table
NMED Risk Assessment Guidance for Investigations and Remediations Table A-1
NOTES
Wells marked in red were not sampled because SPH was present in the well or the well was dry
Items notes with a * and italics have a detection limit greater than or equal to the applicable standard.
1) Sampling frequency changed to annual per concurrence by NMED in Comment 6 of NMED Disapproval Facility Wide Ground Water Monitoring Work Plan 2011 Updates, 9/24/12.
2) No samples collected - dedicated recovery system installed on well.
3) OW-64 - No samples collected in the 4th Quarter 2018 and 1st Quarter 2019 - SPH detected.

8.5.5 OW-50, OW-52, OW-54, OW-55, OW-56, OW-57, OW-58, OW-63, OW-64
Volatile Organic Compound Analytical Result Summary

		STANDARDS	PARAMETERS																
			1,2,4-Trimethyl benzene (mg/L)	1,3,5-Trimethyl benzene (mg/L)	1,2-Dichloroethane (EDC) (mg/L)	1,2-Dibromethane (EDB) (mg/L)	Naphthalene (mg/L)	1-Methyl naphthalene (mg/L)	2-Methyl naphthalene (mg/L)	Acetone (mg/L)	2-Butanone (mg/L)	Chloro ethane (mg/L)	1,1-Dichloro ethane (mg/L)	Isopropyl benzene (mg/L)	4-Isopropyl toluene (mg/L)	Methylene Chloride (mg/L)	n-Butyl benzene (mg/L)	n-Propyl benzene (mg/L)	Sec-butyl benzene (mg/L)	tert-butyl benzene (mg/L)
WQCC 20 NMAC 6.2.3103 (DEC 2018)			NE	NE	**0.005**	**0.00005**	**0.03**	NE	NE	NE	NE	NE	**0.025**	NE	NE	**0.005**	NE	NE	NE	NE
40 CFR 141.61 MCL			NE	NE	0.005	0.00005	NE	NE	NE	NE	NE	NE	NE	NE	NE	0.005	NE	NE	NE	NE
NMED TAP WATER (JUNE 2019)			NE	NE	0.0017	0.0000747	0.00165	**0.0114**	**0.035**	**14.06**	**5.56**	**20.86**	0.0275	**0.447**	NE	0.1180	NE	NE	NE	NE
EPA RSL for Tap Water (NOV 2019)			**0.056**	**0.06**	0.013	0.0000075	0.00017	0.0011	0.036	14	5.6	20.9	0.0028	0.45	NE	0.011	**1**	**0.66**	**2**	**0.69**
WELL ID	**DATE SAMPLED**	**METHOD**																		
OW-50	10/15/19	8260B/8011/504.1			0.0005	<0.0000093				0.0021										
	08/16/19	8260B/8011/504.1			<0.001	<0.0000095				0.0015										
	05/01/19	8260B/8011/504.1			0.00034	<0.0000096				<0.01										
	03/27/19	8260B/8011/504.1			0.00038	<0.0000095				<0.01										
	11/07/18	8260B/8011/504.1/EDB			0.00043	<0.0000095				0.0021										
	09/17/18	8260B/8011/504.1/EDB			<0.001	<0.0000094				0.0019										
	09/11/17	8260B			<0.001															
	09/09/16	8260B			0.0005															
	08/11/15	8260B																		
	09/15/14	8260B																		
	09/04/13 [1]	8260B																		
	11/27/12	8260B																		
	08/23/12	8260B																		
	06/13/12	8260B																		
	03/22/12	8260B																		
	12/15/11	8260B																		
	10/25/11	8260B																		
	06/20/11	8260B																		
	03/01/11	8260B																		
	11/09/10	8260B																		
	09/27/10	8260B																		
	06/01/10	8260B																		
	03/16/10	8260B																		
OW-52	10/15/19	8260B/8011/504.1			0.00047	<0.0000093				<0.01										
	08/16/19	8260B/8011/504.1			<0.001	<0.0000095				0.0014										
	05/01/19	8260B/8011/504.1			0.00032	<0.0000095				<0.01										
	03/27/19	8260B/8011/504.1			0.00035	<0.0000094				<0.01										
	11/07/18	8260B/8011/504.1			0.00042	<0.0000095				<0.01										
	09/17/18	8260B/8011/504.1/EDB			<0.001	<0.0000095				0.001										
	09/11/17	8260B			<0.001															
	09/09/16	8260B			0.00049															
OW-53	10/15/19	--								Dry										
	08/21/19	--								Dry										
	05/02/19	--								Dry										
	02/06/19	--								Dry										
OW-54	10/15/19	--								SPH										
	08/21/19	8260B	0.012	<0.005	*<0.005**	*<0.005**	<0.01	*<0.02**	<0.02	<0.05	<0.05	<0.01	<0.005	0.0015	<0.005	*<0.015**	<0.015	0.003	0.0016	
	05/02/19	8260B/8011/504.1/EDB	0.016	<0.005	*<0.005**	<0.0000095	<0.01	*<0.02**	<0.02	<0.05	<0.05	<0.01	<0.005	<0.005	<0.005	*<0.015**	<0.015	0.003	<0.005	
	02/06/19	8260B	0.015	<0.002	<0.002	*<0.002**	<0.004	<0.008	<0.008	<0.02	<0.02	<0.004	<0.002	<0.002	<0.002	*<0.006**	<0.006	0.0023	<0.002	
	11/07/18	8260B	0.01	<0.001	0.0006	*<0.001**	0.00099	0.00047	<0.004	<0.01	<0.01	<0.002	<0.001	0.00051	<0.001	<0.003	0.00029	0.0021	0.00095	
	08/28/18	8260B	0.0079	<0.002	<0.002	*<0.002**	<0.004	<0.008	<0.008	<0.02	<0.02	<0.004	<0.002	<0.002	<0.002	*<0.006**	<0.006	0.00076	0.00055	
	05/08/18	8260B	0.01	<0.005	*<0.005**	*<0.005**	<0.01	*<0.02**	<0.02	<0.05	<0.05	<0.01	<0.005	<0.005	<0.005	*<0.015**	<0.015	0.0012	<0.005	
	02/22/18	8260B	0.0088	<0.005	*<0.005**	*<0.005**	<0.01	*<0.02**	<0.02	<0.05	<0.05	<0.01	<0.005	0.00028	<0.005	0.0026	0.00067	0.0018	0.00078	
	12/06/17	8260B	0.0094	0.00052	*<0.005**	*<0.1**	<0.01	*<0.02**		<0.05		<0.3	*<0.1**	0.018		<0.003	<0.003	<0.001	<0.005	
	09/11/17	8260B	0.018	0.0011	*<0.005**	*<0.1**	<0.01	*<0.02**		<0.05		<0.3	*<0.1**	0.016		<0.003	0.00015	<0.001	0.00068	
	06/21/17	8260B	0.021	0.0022	<0.001	*<0.05**	0.0017	0.00098		0.018		<0.15	*<0.05**	0.024		<0.003	<0.003	<0.001	0.00094	
	03/29/17	8260B	0.02	0.0021	0.00064	*<0.05**	0.0015	0.00063		<0.01		<0.15	*<0.05**	0.02		<0.003	<0.003	<0.001	0.0011	

8.5.5 OW-50, OW-52, OW-54, OW-55, OW-56, OW-57, OW-58, OW-63, OW-64
Volatile Organic Compound Analytical Result Summary

		STANDARDS	PARAMETERS																	
			1,2,4-Trimethyl benzene (mg/L)	1,3,5-Trimethyl benzene (mg/L)	1,2-Dichloroethane (EDC) (mg/L)	1,2-Dibromethane (EDB) (mg/L)	Naphthalene (mg/L)	1-Methyl naphthalene (mg/L)	2-Methyl naphthalene (mg/L)	Acetone (mg/L)	2-Butanone (mg/L)	Chloro ethane (mg/L)	1,1-Dichloro ethane (mg/L)	Isopropyl benzene (mg/L)	4-Isopropyl toluene (mg/L)	Methylene Chloride (mg/L)	n-Butyl benzene (mg/L)	n-Propyl benzene (mg/L)	Sec-butyl benzene (mg/L)	tert-butyl benzene (mg/L)
WQCC 20 NMAC 6.2.3103 (DEC 2018)			NE	NE	**0.005**	**0.00005**	**0.03**	NE	NE	NE	NE	NE	**0.025**	NE	NE	**0.005**	NE	NE	NE	NE
40 CFR 141.61 MCL			NE	NE	0.005	0.00005	NE	NE	NE	NE	NE	NE	NE	NE	NE	0.005	NE	NE	NE	NE
NMED TAP WATER (JUNE 2019)			NE	NE	0.0017	0.0000747	0.00165	**0.0114**	**0.035**	**14.06**	**5.56**	**20.86**	0.0275	**0.447**	NE	0.1180	NE	NE	NE	NE
EPA RSL for Tap Water (NOV 2019)			**0.056**	**0.06**	0.013	0.0000075	0.00017	0.0011	0.036	14	5.6	20.9	0.0028	0.45	NE	0.011	**1**	**0.66**	**2**	**0.69**
WELL ID	DATE SAMPLED	METHOD																		
OW-55	10/15/19	--								SPH										
	08/21/19	--								SPH										
	05/02/19	8260B/8011/504.1/EDB	**0.15**	0.028	*<0.05**	<0.0000095	**0.034**	**0.021**	*<0.2**	<0.5	<0.5	<0.1	*<0.05**	0.018	<0.05	*<0.15**	<0.15	0.051	<0.05	
	02/06/19	8260B	**0.19**	<0.05	*<0.05**	*<0.05**	*<0.1**	*<0.2**	*<0.2**	<0.5	<0.5	<0.1	*<0.05**	<0.05	<0.05	*<0.15**	<0.15	0.061	<0.05	
	11/07/18	8260B	**0.13**	0.029	**0.0057**	*<0.02**	**0.036**	**0.02**	0.0075	<0.2	<0.2	<0.04	<0.02	0.028	<0.02	*<0.06**	<0.06	0.07	0.0054	
	08/28/18	8260B	**0.12**	0.024	*<0.02**	*<0.02**	0.018	0.011	*<0.08**	<0.2	<0.2	<0.04	<0.02	0.022	<0.02	*<0.06**	0.0067	0.058	0.0048	
	05/08/18	8260B	**0.15**	0.029	*<0.05**	*<0.05**	0.017	*<0.2**	*<0.2**	<0.5	<0.5	<0.1	*<0.05**	0.019	<0.05	*<0.15**	<0.15	0.05	<0.05	
	02/22/18	8260B	**0.13**	0.028	*<0.05**	*<0.05**	0.027	**0.028**	*<0.2**	<0.5	<0.5	<0.1	*<0.05**	0.021	<0.05	*<0.15**	0.0088	0.052	<0.05	
	12/06/17	8260B	**0.13**	0.027	*<0.1**	*<0.1**	*<0.2**	*<0.4**		<1.0		<0.3	*<0.1**	0.018		*<0.3**	<0.003	<0.001	0.00027	
	09/11/17	8260B	**0.23**	0.05	*<0.1**	*<0.1**	**0.042**	*<0.4**		<1.0		<0.3	*<0.1**	0.016		*<0.3**	0.00015	<0.001	0.00014	
	06/21/17	8260B	**0.33**	**0.093**	*<0.1**	*<0.05**	**0.052**	**0.029**		<0.5		<0.15	*<0.05**	0.024		*<0.15**	<0.003	<0.001	<0.001	
	03/29/17	8260B	**0.39**	**0.1**	*<0.1**	*<0.05**	**0.07**	**0.027**		<0.5		<0.15	*<0.05**	0.02		*<0.15**	<0.003	<0.001	0.00034	
OW-56	10/15/19	8260B	<0.001	<0.001	**0.0077**	*<0.001**	<0.002	<0.004	<0.004	<0.01	<0.01	<0.002	0.00058	0.0014	<0.001	<0.003	<0.003	<0.001	0.00051	
	08/21/19	8590B	<0.001	<0.001	**0.0091**	*<0.001**	<0.002	0.00077	<0.004	0.0053	<0.01	<0.002	<0.001	0.0015	<0.001	<0.003	0.00098	<0.001	0.00043	
	05/02/19	8260B/8011/504.1/EDB	0.00025	<0.001	0.0041	<0.0000095	<0.002	<0.004	<0.004	0.015	<0.01	<0.002	<0.001	0.00081	<0.001	<0.003	<0.003	<0.001	<0.001	
	02/06/19	8260B	<0.001	<0.001	**0.0082**	*<0.001**	<0.002	<0.004	<0.004	<0.01	<0.01	<0.002	<0.001	<0.001	<0.001	<0.003	<0.003	<0.001	<0.001	
	11/07/18	8260B	<0.001	<0.001	**0.013**	*<0.001**	<0.002	<0.004	<0.004	<0.01	<0.01	<0.002	0.00057	0.0023	<0.001	<0.003	0.00035	<0.001	0.00051	
	08/28/18	8260B	**0.069**	<0.001	**0.012**	*<0.001**	<0.002	<0.004	<0.004	0.0099	<0.014	<0.002	0.00049	0.00048	<0.001	<0.003	<0.003	<0.001	<0.001	
	05/08/18	8260B	<0.001	<0.001	0.0019	*<0.001**	<0.002	<0.004	<0.004	0.0043	<0.01	<0.002	<0.001	0.0012	<0.001	<0.003	<0.003	<0.001	<0.001	
	02/22/18	8260B	<0.001	<0.001	0.0044	*<0.001**	<0.002	<0.004	<0.004	0.0014	<0.01	<0.002	0.00047	0.0025	<0.001	<0.003	<0.003	<0.001	0.00023	
	12/06/17	8260B	<0.001	<0.001	**0.019**	*<0.001**	<0.002	<0.004		0.0059		<0.003	0.0067	0.0016		<0.003	<0.003	<0.001	0.00027	
	09/11/17	8260B	<0.002	<0.001	**0.0089**	*<0.001**	<0.002	<0.004		0.0076		<0.003	0.00057	0.00091		<0.003	0.00015	<0.001	0.00014	
	06/21/17	8260B	0.00012	<0.001	0.0039	*<0.001**	<0.002	<0.004		0.016		<0.003	<0.001	0.00028		<0.003	<0.003	<0.001	<0.001	
	03/29/17	8260B	<0.001	<0.001	0.0047	*<0.001**	<0.002	<0.004		<0.01		<0.003	0.00064	0.00052		<0.003	<0.003	<0.001	0.00034	
OW-57	11/05/19	8260B	<0.02	<0.02	*<0.02**	*<0.02**	**0.16**	**0.14**	**0.053**	0.05	<0.2	<0.04	<0.02	0.016	<0.02	*<0.06**	0.0054	0.042	<0.02	
	08/21/19	8260B	<0.02	<0.02	*<0.02**	*<0.02**	**0.15**	**0.11**	**0.063**	<0.2	<0.2	<0.04	<0.02	0.018	<0.02	*<0.06**	0.02	0.044	0.0058	
	05/16/19	8260B	0.005	<0.02	*<0.02**	*<0.02**	**0.13**	**0.13**	**0.049**	<0.2	<0.2	<0.04	<0.02	0.015	<0.02	*<0.06**	<0.06	0.039	<0.02	
	02/20/19	8260B	<0.02	<0.02	*<0.02**	*<0.02**	**0.15**	**0.12**	**0.037**	<0.2	<0.2	<0.04	<0.02	0.016	<0.02	*<0.06**	0.0058	0.05	<0.02	
	11/29/18	8260B	<0.02	<0.02	*<0.02**	*<0.02**	**0.12**	**0.082**	0.024	<0.2	<0.2	<0.04	<0.02	0.014	<0.02	*<0.06**	<0.06	0.04	<0.02	
	08/28/18	8260B	<0.02	<0.02	*<0.02**	*<0.02**	**0.12**	**0.086**	0.022	0.085	<0.2	<0.04	<0.02	0.015	<0.02	*<0.06**	0.0062	0.045	<0.02	
	05/08/18	8260B	*<0.1**	*<0.1**	*<0.1**	*<0.1**	**0.11**	**0.12**	*<0.4**	<1.0	<1.0	<0.2	*<0.1**	0.011	<0.1	*<0.3**	<0.3	0.031	<0.1	
	02/20/18	8260B	<0.05	<0.05	*<0.05**	*<0.05**	**0.12**	**0.09**	0.033	0.097	<0.5	<0.1	*<0.05**	0.015	<0.05	*<0.15**	0.0076	0.045	<0.05	
	12/06/17	8260B	*<0.1**	*<0.1**	*<0.1**	*<0.1**	**0.045**	**0.045**		<1.0		<0.3	*<0.1**	0.012		*<0.3**	<0.3	0.029	<0.1	
	09/19/17	8260B	<0.05	<0.05	*<0.05**	*<0.05**	**0.096**	**0.09**		<0.5		<0.15	*<0.05**	0.014		*<0.15**	<0.15	0.033	<0.05	
	06/21/17	8260B	<0.05	<0.05	*<0.05**	*<0.05**	**0.11**	**0.076**		<0.5		<0.15	*<0.05**	0.015		*<0.15**	<0.15	0.034	<0.05	
	03/30/17	8260B	<0.05	<0.05	*<0.05**	*<0.05**	**0.13**	**0.088**		<0.5		<0.15	*<0.05**	0.02		*<0.15**	<0.15	0.045	<0.05	
OW-58	11/18/19	8260B	0.016	<0.05	*<0.05**	*<0.05**	**0.18**	**0.078**	**0.053**	<0.5	<0.5	<0.1	*<0.05**	0.026	<0.05	*<0.15**	<0.15	0.09	<0.05	
	08/22/19	8260B	0.024	<0.05	*<0.05**	*<0.05**	**0.15**	**0.083**	**0.08**	<0.5	<0.5	<0.1	*<0.05**	0.031	<0.05	*<0.15**	0.05	0.07	0.015	
	06/05/19	8260B	*<0.1**	*<0.1**	*<0.1**	*<0.1**	**0.2**	**0.11**	**0.079**	<1.0	<1.0	<0.2	*<0.1**	0.028	<0.1	*<0.3**	<0.3	0.086	<0.1	
	03/28/19	8260B	0.037	*<0.1**	*<0.1**	*<0.1**	**0.17**	**0.093**	**0.067**	<1.0	<1.0	<0.2	*<0.1**	0.02	<0.1	*<0.3**	<0.3	0.083	<0.1	
	11/29/18	8260B	0.015	<0.05	*<0.05**	*<0.05**	**0.16**	**0.06**	**0.042**	<0.5	<0.5	<0.1	*<0.05**	0.03	<0.05	*<0.15**	<0.15	0.097	<0.05	
	08/28/18	8260B	0.028	<0.05	*<0.05**	*<0.05**	**0.15**	**0.059**	**0.045**	<0.5	<0.5	<0.1	*<0.05**	0.032	<0.05	*<0.15**	<0.15	0.098	<0.05	
	05/08/18	8260B	0.03	*<0.1**	*<0.1**	*<0.1**	**0.17**	**0.1**	**0.054**	<1.0	<1.0	<0.2	*<0.1**	0.032	<0.1	*<0.3**	<0.3	0.1	<0.1	
	02/20/18	8260B	0.023	*<0.1**	*<0.1**	*<0.1**	**0.17**	**0.095**	**0.073**	<1.0	<1.0	<0.2	*<0.1**	0.029	<0.1	*<0.3**	0.016	0.095	<0.1	
	12/06/17	8260B	0.024	*<0.1**	*<0.1**	*<0.1**	**0.11**	**0.038**						0.033			<0.3	0.089		
	09/19/17	8260B	**0.11**	0.039	*<0.1**	*<0.1**	**0.15**	**0.082**						0.036			<0.3	0.092		
	06/21/17	8260B	**0.1**	0.038	*<0.1**	*<0.1**	**0.15**	**0.085**						0.038			0.016	0.098		
	03/29/17	8260B	**0.17**	0.044	*<0.1**	*<0.1**	**0.18**	**0.07**						0.026			<0.3	0.09		
OW-58A	12/03/19	8260B	**0.36**	**0.12**	*<0.02**	*<0.02**	**0.28**	**0.16**	**0.18**	<0.2	<0.2	<0.04	<0.02	0.034	0.0057	*<0.06**	0.016	0.099	0.0079	<0.02

8.5.5 OW-50, OW-52, OW-54, OW-55, OW-56, OW-57, OW-58, OW-63, OW-64
Volatile Organic Compound Analytical Result Summary

STANDARDS			PARAMETERS																
			1,2,4-Trimethyl benzene (mg/L)	1,3,5-Trimethyl benzene (mg/L)	1,2-Dichloroethane (EDC) (mg/L)	1,2-Dibromethane (EDB) (mg/L)	Naphthalene (mg/L)	1-Methyl naphthalene (mg/L)	2-Methyl naphthalene (mg/L)	Acetone (mg/L)	2-Butanone (mg/L)	Chloro ethane (mg/L)	1,1-Dichloro ethane (mg/L)	Isopropyl benzene (mg/L)	4-Isopropyl toluene (mg/L)	Methylene Chloride (mg/L)	n-Butyl benzene (mg/L)	n-Propyl benzene (mg/L)	Sec-butyl benzene (mg/L)	tert-butyl benzene (mg/L)
WQCC 20 NMAC 6.2.3103 (DEC 2018)			NE	NE	**0.005**	**0.00005**	**0.03**	NE	NE	NE	NE	NE	**0.025**	NE	NE	**0.005**	NE	NE	NE	NE
40 CFR 141.61 MCL			NE	NE	0.005	0.00005	NE	NE	NE	NE	NE	NE	NE	NE	NE	0.005	NE	NE	NE	NE
NMED TAP WATER (JUNE 2019)			NE	NE	0.0017	0.0000747	0.00165	**0.0114**	**0.035**	**14.06**	**5.56**	**20.86**	0.0275	**0.447**	NE	0.1180	NE	NE	NE	NE
EPA RSL for Tap Water (NOV 2019)			**0.056**	**0.06**	0.013	0.0000075	0.00017	0.0011	0.036	14	5.6	20.9	0.0028	0.45	NE	0.011	**1**	**0.66**	**2**	**0.69**
WELL ID	**DATE SAMPLED**	**METHOD**																		
OW-61	11/04/19	--								SPH										
	08/20/19	--								SPH										
	05/15/19	--								SPH										
	02/19/19	--								SPH										
OW-63	11/18/19	8260B	0.0077	0.014	*<0.02**	*<0.02**	**0.3**	**0.077**	**0.094**	<0.2	<0.2	<0.04	<0.02	0.053	<0.02	*<0.06**	0.017	0.15	0.0079	
	08/19/19	8260B	0.017	0.017	*<0.05**	*<0.05**	**0.32**	**0.09**	**0.1**	<0.5	<0.5	<0.1	*<0.05**	0.056	<0.05	*<0.15**	0.017	0.17	<0.05	
	05/15/19	8260B	0.0099	0.018	*<0.02**	*<0.02**	**0.33**	**0.097**	**0.11**	<0.2	<0.2	<0.04	<0.02	0.058	<0.02	*<0.06**	0.018	0.16	0.0085	
	02/20/19	8260B	0.0086	0.022	*<0.02**	*<0.02**	**0.32**	**0.076**	**0.087**	<0.2	<0.2	<0.04	<0.02	0.051	<0.02	*<0.06**	0.023	0.17	0.0095	
	12/03/18	8260B	0.01	0.028	*<0.02**	*<0.02**	**0.32**	**0.07**	**0.076**	<0.2	<0.2	<0.04	<0.02	0.05	<0.02	*<0.06**	0.019	0.16	0.0073	
	08/22/18	8260B	0.014	0.036	*<0.02**	*<0.02**	**0.33**	**0.092**	**0.11**	0.59	<0.2	<0.04	<0.02	0.054	<0.02	*<0.06**	0.022	0.18	0.0072	
	04/29/18	8260B	0.022	0.043	<0.001	*<0.001**	**0.4**	**0.11**	**0.12**	0.33	0.1	<0.002	<0.001	0.058	0.0046	<0.003	0.024	0.2	0.01	
OW-64 [3]	11/18/19	8260B	0.055	0.003	<0.002	*<0.002**	0.0033	0.0028	<0.008	0.005	<0.02	<0.004	<0.002	0.037	0.0071	*<0.006**	<0.006	0.023	0.012	0.00097
	08/19/19	8260B	**0.11**	0.0066	*<0.01**	*<0.01**	0.0091	0.0047	*<0.04**	0.014	<0.1	<0.02	<0.01	0.047	0.0066	*<0.03**	<0.03	0.037	0.014	
	05/15/19	8260B	**0.19**	0.023	*<0.005**	*<0.005**	0.0093	0.0049	0.003	<0.05	<0.05	<0.01	<0.005	0.072	0.0095	*<0.015**	<0.015	0.063	0.019	
	02/20/19				SPH															
	12/03/18				SPH															
	08/22/18	8260B	0.44	**0.08**	*<0.005**	*<0.005**	0.02	0.007	0.0064	0.046	<0.05	<0.01	<0.005	0.11	0.014	*<0.015**	0.011	0.11	0.027	
	04/29/18	8260B	**1.2**	**0.28**	*<0.005**	*<0.005**	**0.053**	**0.025**	0.026	<0.05	<0.05	<0.01	<0.005	0.18	0.038	*<0.015**	0.02	0.17	0.058	
OW-65	11/04/19	--								SPH										
	08/20/19	--								SPH										
	05/15/19	--								SPH										
	02/19/19	--								SPH										

DEFINITIONS
NA = Not analyzed; NE = Not established
Bold and highlighted values represent values above the applicable standards
STANDARDS
WQCC 20 NMAC 6.2.3103 - Standards for Ground Water of 10,000 mg/l TDS Concentration or Less.
a) Human Health Standards; b) Other Standards for Domestic Water
40 CFR 141.61 Maximum Contaminant Levels for Organic Contaminants
NMED Risk Assessment Guidance for Investigations and Remediations Table A-1
EPA Regional Screening Level (RSL) Summary Table
NOTES
Wells marked in red were not sampled because SPH was present in the well or the well was dry
Items notes with a * and italics have a detection limit greater than or equal to the applicable standard.
1) *Beginning in 2013, sampling frequency changed to annual per concurrence by NMED in Comment 6 of NMED Disapproval Facility Wide Ground Water Monitoring Work Plan 2011 Updates 9/24/12.*
2) *No samples collected - dedicated recovery system installed on well.*
3) *OW-64 - No samples collected in the 4th Quarter 2018 and 1st Quarter 2019 - SPH detected.*

8.6 PW-2, PW-3, PW-4

BTEX, MTBE, General Chemistry and DRO/GRO/MRO Analytical Result Summary

			PARAMETERS												
STANDARDS			Benzene (mg/L)	Toluene (mg/L)	Ethyl benzene (mg/L)	Total Xylenes (mg/L)	MTBE (mg/L)	Nitrite (mg/L)	Nitrate (mg/L)	Fluoride (mg/L)	Chloride (mg/L)	Sulfate (mg/L)	DRO (mg/L)	GRO (mg/L)	MRO (mg/L)
WQCC 20NMAC 6.2.3103 (DECEMBER 2018)			**0.005**	**1**	**0.7**	**0.62**	**0.1**	**1**	**10**	**1.6**	**250.0**	**600.0**	NE	NE	NE
40 CFR 141.62 MCL			0.005	1	0.7	10	NE	1	10	4.0	NE	NE	NE	NE	NE
NMED TAP WATER (Rev 2. JUN 2019)			0.00455	1.09	0.0149	0.193	0.143	1.97	31.60	1.18	NE	NE	NE	NE	NE
EPA RSL for Tap Water (NOV 2019)			0.0046	1.1	0.0015	0.19	0.14	2	32	0.8	NE	NE	NE	NE	NE
NMED SSG (MAR 2019)			NE	NE	NE	NE	NE	NE	NE	NE	NE	NE	**0.0167**	**0.0101**	**0.0858**
Well ID	**DATE SAMPLED**	**METHOD**													
PW-2	09/18/17	8260B/Anions	<0.001	<0.001	<0.001	<0.0015	<0.001	0.19	0.19	<0.5	6.8	340	NA	NA	NA
	09/10/14	8260B/Anions	<0.001	<0.001	<0.001	<0.0015	<0.001	NL	0.12						
	12/15/11 [1]	8260B/Anions	<0.001	<0.001	<0.001	<0.0015	<0.001	NL	0.15						
	10/26/11	8260B/Anions	<0.001	<0.001	<0.001	<0.0015	<0.001	<0.1	<0.1						
	09/12/08	8260B/Anions	<0.001	<0.001	<0.001	<0.0015	<0.01	*<1.0**	<1.0						
PW-3	11/20/19	8260B/300.0	<0.001	<0.001	<0.001	<0.0015	<0.001	<0.5	0.2	0.27	32	**710**	*<0.4**	*<0.05**	*<2.5**
	08/28/19	8260B/300.0	<0.001	<0.001	<0.001	<0.0015	<0.001	<0.5	0.087	NA	NA	**NA**	NA	NA	NA
	05/14/19	8260B/300.0	<0.001	<0.001	<0.001	<0.0015	<0.001	<0.5	0.13	<0.5	32	**730**	NA	NA	NA
	02/20/19	8260B/300.0	<0.001	<0.001	<0.001	<0.0015	<0.001	<0.5	<0.5	<0.5	33	**730**	NA	NA	NA
	11/20/18	8260B/300.0	0.00062	<0.001	<0.001	0.00082	<0.001	<0.5	<0.5	<0.5	34	**720**	NA	NA	NA
	09/19/18	8260B/300.0	<0.001	<0.001	<0.001	<0.0015	<0.001	*<1.0**	<1.0	<0.5	33	**720**	NA	NA	NA
	09/18/17	8260B/300.0	<0.001	<0.001	<0.001	<0.0015	<0.001	*<1.0**	<1.0	<0.5	34	**770**	NA	NA	NA
	08/31/16	8260B/300.0	<0.001	<0.001	<0.001	<0.0015	<0.001	*<1.0**	<1.0	NA	NA	NA	NA	NA	NA
	08/23/15	8260B/300.0	<0.001	<0.001	<0.001	<0.0015	<0.001	*<1.0**	<1.0	0.16	31	**750**	*<1.0**	*<0.05**	*<5.0**
	09/10/14	8260B/Anions	<0.001	<0.001	<0.001	<0.0015	<0.001	NL	<0.1						
	09/10/13	8260B/Anions	<0.001	<0.001	<0.001	<0.0015	<0.001	NL	0.15						
	08/24/12	8260B/Anions	<0.001	<0.001	<0.001	<0.0015	<0.001	*<1.0**	<1.0						
	10/31/11	8260B/Anions	<0.001	<0.001	<0.001	<0.0015	<0.01	NL	<0.1						
	09/23/10	8260B/Anions	<0.001	<0.001	<0.001	<0.0015	<0.01	*<1.0**	<1.0						
	08/21/08	8260B/Anions	<0.001	<0.001	<0.001	<0.0015	<0.01	<0.01	0.13						
	01/01/08	8260B/Anions	<0.001	<0.001	<0.001	<0.0015	<0.01	<0.2	<0.2						
PW-4	11/20/19	8260B/Anions	<0.001	<0.001	<0.001	<0.0015	<0.001	<0.5	0.17	0.24	7.5	390	*<0.4**	*<0.05**	*<2.5**
	08/27/19	8260B/Anions	<0.001	<0.001	<0.001	<0.0015	<0.001	<0.5	0.13	NA	NA	NA	NA	NA	NA
	05/14/19	8260B/Anions	<0.001	<0.001	<0.001	<0.0015	<0.001	<0.5	0.18	<0.5	7.8	410	NA	NA	NA
	02/20/19	8260B/Anions	<0.001	<0.001	<0.001	<0.0015	<0.001	<0.5	0.15	<0.5	8	410	NA	NA	NA
	11/19/18	8260B/Anions	<0.001	<0.001	<0.001	<0.0015	<0.001	<0.5	<0.5	<0.5	7.6	390	NA	NA	NA
	09/19/18	8260B/Anions	<0.001	<0.001	<0.001	<0.0015	<0.001	*<1.0**	<1.0	<0.5	7.9	400	NA	NA	NA
	03/01/18	8260B/300.0	<0.001	<0.001	<0.001	<0.0015	<0.001	<0.5	0.17	<0.5	7.5	400	NA	NA	NA
	09/18/17	8260B/Anions	<0.001	<0.001	<0.001	<0.0015	<0.001	0.18	0.18	<0.5	7.4	410	NA	NA	NA
	03/30/17	8260B/Anions	<0.0005	<0.0005	<0.0005	<0.00075	<0.0005	NA	0.51	NA	NA	NA	NA	NA	NA
	08/31/16	8260B/Anions	<0.001	<0.001	<0.001	<0.0015	<0.001	NL	<1.0						
	06/10/16 [2]	8260B	<0.001	<0.001	<0.001	<0.0015	<0.001	NA	NA						
	09/10/13	8260B/Anions	<0.001	<0.001	<0.001	<0.0015	<0.001	NA	0.19						
	07/28/10	8260B/Anions	<0.001	<0.001	<0.001	<0.0015	<0.001	<0.01	0.14						
	09/12/08	8260B/Anions	<0.001	<0.001	<0.001	<0.0015	<0.01	<0.01	<0.02						

DEFINITIONS

NA = Not analyzed; NE = Not established

Bold and highlighted values represent values above the applicable standards

STANDARDS

WQCC 20 NMAC 6.2.3103 - Standards for Ground Water of 10,000 mg/l TDS Concentration or Less.

a) Human Health Standards; b) Other Standards for Domestic Water

40 CFR 141.62 Detection Limits for Inorganic Contaminants

EPA Regional Screening Level (RSL) Summary Table

NMED Risk Assessment Guidance for Investigations and Remediations Table A-1

NMED Soil Screening Guidance Volume 1, Table 6-4 (groundwater)

NOTES

Items notes with a * and italics have a detection limit greater than or equal to the applicable standard.

1) Re-sampled on 12/15/2011 due to detection of PCE during the Annual sampling event on 10/26/2011.

2) Per NMED directive - sampling of PW-4 switched to semi-annual beginning in the second quarter of 2016.

8.6.1 PW-2, PW-3, PW-4
Total Metals Analytical Result Summary

STANDARDS			PARAMETERS												
			Arsenic (mg/L)	Barium (mg/L)	Cadmium (mg/L)	Chromium (mg/L)	Copper (mg/L)	Iron (mg/L)	Lead (mg/L)	Manganese (mg/L)	Selenium (mg/L)	Mercury (ug/L)	Cyanide (mg/L)	Uranium (mg/L)	Zinc (mg/L)
WQCC 20NMAC 6.2.3103 (DECEMBER 2018)			**0.01**	**2.0**	**0.005**	**0.05**	**1**	**1**	**0.015**	**0.2**	**0.05**	**2**	**0.2**	**0.03**	**10.0**
40 CFR 141.62 MCL			0.01	2.0	0.005	0.1	1.3	NE	0.015	NE	0.05	2	0.2	0.03	NE
NMED TAP WATER (Rev 2. JUN 2019)			0.000585	3.28	0.00624	0.0057	0.7898	13.8	NE	2.02	0.0987	0.626	0.00146	0.0592	5.96
EPA RSL for Tap Water (NOV 2019)			0.00052	3.8	0.0092	22	0.8	14	0.015	0.43	0.1	0.63	0.0015	0.004	6
Well ID	**DATE SAMPLED**	**METHOD**													
PW-2	09/18/17	200.7/200.8	0.0031	0.013	<0.002	<0.006	<0.006	0.042	<0.0005	0.0033	0.0011	<0.2	<0.005	0.0023	0.0071
	09/10/14	200.7/200.8	0.0033	0.014	<0.002	<0.006	<0.006	0.05	<0.001	<0.002	0.0014	<0.2	<0.01	0.0024	<0.01
	12/15/11 [1]	200.7/200.8	0.0055	0.12	<0.002	<0.006	<0.006	0.74	<0.005	0.011	<0.0025	<0.2	<0.01	<0.0025	<0.01
	10/26/11 [1]	200.7/200.8	<0.0025	0.016	<0.002	<0.006	<0.006	0.29	<0.005	0.058	<0.0025	<0.2	<0.01	<0.0025	<0.01
	09/12/08	6010B	*<0.02**	0.013	<0.002	<0.006	<0.006	0.07	<0.005	<0.002	<0.05	<0.2	<0.01	0.0016	<0.05
PW-3	11/20/19	200.7/200.8	0.0039	0.01	<0.002	<0.006	<0.006	0.031	<0.0005	0.00056	0.00081	<0.2	<0.01	0.0012	<0.01
	08/28/19	200.7/200.8	0.0039	0.01	<0.002	<0.006	<0.006	0.032	<0.0005	0.001	0.0011	0.11	<0.005	0.0013	<0.01
	05/14/19	200.7/200.8	0.0037	0.0099	<0.002	<0.006	<0.006	0.019	<0.0005	0.00066	0.00077	<0.2	<0.005	0.0013	<0.01
	02/20/19	200.7/200.8	0.0037	0.011	<0.002	<0.006	<0.006	0.035	<0.0005	0.0012	0.00079	<0.2	<0.005	0.0014	<0.01
	11/20/18	200.7/200.8	0.0049	0.011	<0.002	<0.006	<0.006	0.031	<0.0005	0.0011	<0.001	<0.2	<0.005	NA	0.0037
	09/19/18	200.7/200.8	0.0057	0.011	<0.002	<0.006	<0.006	0.05	0.00055	<0.002	<0.001	<0.2	<0.005	0.0014	0.0057
	08/31/16	200.7/200.8	0.0041	0.011	<0.002	<0.006	<0.006	0.24	0.00025	0.0016	0.0017	NA	<0.01	0.0017	0.0072
	08/23/15	200.7/200.8	0.0035	0.01	<0.002	<0.006	<0.006	0.079	<0.0005	<0.002	0.0012	<0.2	<0.01	0.0017	<0.01
	09/10/14	200.7/200.8	0.0039	0.011	<0.002	<0.006	<0.006	0.3	<0.001	0.0025	0.0019	<0.2	<0.01	0.0016	0.01
	09/10/13	200.7/200.8	0.0038	0.011	<0.002	<0.006	<0.006	0.2	<0.001	0.0022	0.0011	<0.2	<0.01	0.0015	0.014
	08/24/12	200.7/200.8	0.004	0.011	<0.002	<0.006	<0.006	0.24	<0.005	<0.002	<0.0025	<0.2	0.0085	<0.0025	0.027
	10/31/11	200.7/200.8	0.0035	0.01	<0.002	<0.006	<0.006	0.09	<0.005	0.003	0.0012	<0.2	<0.01	0.0014	0.023
	09/23/10	6010B	*<0.02**	<0.02	<0.002	<0.006	0.032	0.47	0.0074	0.0046	<0.05	<0.2	<0.005	0.001	0.037
	08/21/08	6010B	*<0.02**	<0.02	<0.002	<0.006	<0.006	<0.05	<0.005	<0.0002	<0.25	<0.2	<0.004	<0.00063	<0.05
	01/01/08	6010B	*<0.02**	0.014	<0.002	<0.006	<0.006	0.2	0.0056	0.015	<0.5	<0.2	<0.01	*<0.1**	0.041

8.6.1 PW-2, PW-3, PW-4
Total Metals Analytical Result Summary

STANDARDS			PARAMETERS												
			Arsenic (mg/L)	Barium (mg/L)	Cadmium (mg/L)	Chromium (mg/L)	Copper (mg/L)	Iron (mg/L)	Lead (mg/L)	Manganese (mg/L)	Selenium (mg/L)	Mercury (ug/L)	Cyanide (mg/L)	Uranium (mg/L)	Zinc (mg/L)
WQCC 20NMAC 6.2.3103 (DECEMBER 2018)			**0.01**	**2.0**	**0.005**	**0.05**	**1**	**1**	**0.015**	**0.2**	**0.05**	**2**	**0.2**	**0.03**	**10.0**
40 CFR 141.62 MCL			0.01	2.0	0.005	0.1	1.3	NE	0.015	NE	0.05	2	0.2	0.03	NE
NMED TAP WATER (Rev 2. JUN 2019)			0.000585	3.28	0.00624	0.0057	0.7898	13.8	NE	2.02	0.0987	0.626	0.00146	0.0592	5.96
EPA RSL for Tap Water (NOV 2019)			0.00052	3.8	0.0092	22	0.8	14	0.015	0.43	0.1	0.63	0.0015	0.004	6
Well ID	**DATE SAMPLED**	**METHOD**													
PW-4	11/20/19	200.7/200.8	0.0035	0.013	<0.002	<0.006	<0.006	0.13	<0.0005	0.0016	0.0013	<0.2	<0.01	0.0013	0.036
	08/27/19	200.7/200.8	NA	NA	NA	NA	NA	NA	NA	NA	NA	NA	<0.005	NA	NA
	05/14/19	200.7/200.8	0.0031	0.013	<0.002	<0.006	<0.006	0.068	<0.0005	<0.002	0.00089	<0.2	<0.005	0.0014	<0.01
	02/20/19	200.7/200.8	0.039	0.014	<0.002	<0.006	<0.006	0.18	<0.0005	0.00072	0.001	<0.2	<0.005	0.0013	<0.01
	11/19/18	6010B	0.0038	0.013	<0.002	<0.006	<0.006	0.089	<0.0005	<0.002	<0.001	<0.2	<0.005	0.0013	<0.01
	09/19/18	6010B	0.0045	0.014	<0.002	<0.006	<0.006	0.11	<0.0005	0.0015	<0.001	0.046	<0.005	0.0014	0.0047
	03/01/18	200.7/200.8	0.0026	0.013	<0.002	<0.006	<0.006	0.47	<0.0005	0.01	0.0012	0.048	<0.005	0.0015	<0.01
	09/18/17	6010B	0.0029	0.013	<0.002	<0.006	<0.006	0.087	<0.0005	<0.002	0.0012	<0.2	<0.005	0.0016	<0.01
	03/30/17	6010B	0.0032	0.012	<0.002	<0.006	<0.006	0.15	<0.0005	0.00087	0.0013	0.052	<0.005	0.0015	<0.01
	08/31/16	6010B	0.0037	0.014	<0.002	<0.006	<0.006	0.14	<0.005	0.0012	0.0016	NA	<0.01	0.0018	0.0036
	06/10/16	200.7/200.8	0.0036	0.014	<0.002	<0.006	<0.006	0.26	<0.0005	0.0025	0.0013	<0.2	<0.01	0.0016	<0.01
	09/10/13	6010B	0.0029	0.014	<0.002	<0.006	<0.006	**1.5**	<0.001	0.014	0.0012	<0.2	<0.01	0.0017	0.025
	07/28/10	6010B	*<0.02**	<0.02	<0.002	<0.006	<0.006	0.23	<0.005	0.0044	<0.05	<0.2	<0.01	0.0021	<0.02
	09/12/08	6010B	*<0.02**	0.013	<0.002	<0.006	<0.006	0.11	<0.005	0.005	<0.05	<0.2	<0.01	0.0014	<0.02

DEFINITIONS

NA = Not analyzed; NE = Not established

Bold and highlighted values represent values above the applicable standards

STANDARDS

WQCC 20 NMAC 6.2.3103 - Standards for Ground Water of 10,000 mg/l TDS Concentration or Less.

a) Human Health Standards; b) Other Standards for Domestic Water

40 CFR 141.62 Detection Limits for Inorganic Contaminants

EPA Regional Screening Level (RSL) Summary Table

NMED Risk Assessment Guidance for Investigations and Remediations Table A-1

NOTES

Items notes with a * and italics have a detection limit greater than or equal to the applicable standard.

1) PW-2 was re-sampled on 12/15/2011 due to detection of PCE during the Annual sampling event on 10/26/2011.

8.6.2 PW-2, PW-3, PW-4
Dissolved Metals Analytical Result Summary

STANDARDS			PARAMETERS										
			Arsenic (mg/L)	Barium (mg/L)	Cadmium (mg/L)	Chromium (mg/L)	Copper (mg/L)	Iron (mg/L)	Lead (mg/L)	Manganese (mg/L)	Selenium (mg/L)	Uranium (mg/L)	Zinc (mg/L)
WQCC 20NMAC 6.2.3103 (DECEMBER 2018)			**0.01**	**2.0**	**0.005**	**0.05**	**1**	**1.0**	**0.015**	**0.2**	**0.05**	**0.03**	**10.0**
40 CFR 141.62 MCL			0.01	2.0	0.005	0.1	1.3	NE	0.015	NE	0.05	0.03	NE
NMED TAP WATER (Rev 2. JUN 2019)			0.000855	3.28	0.00624	0.0057	0.7898	13.8	NE	2.02	0.0987	0.0592	5.96
EPA RSL for Tap Water (NOV 2019)			0.00052	3.8	0.0092	22	0.8	14	0.015	0.43	0.1	0.004	6
Well ID	**DATE SAMPLED**	**METHOD**											
PW-2	09/18/17	200.7/200.8	0.0031	0.014	<0.002	<0.006	<0.006	0.028	<0.0005	0.0012	0.0017	NA	0.041
	09/10/14	200.7/200.8	0.0031	0.012	<0.002	<0.006	<0.006	0.042	<0.001	<0.002	0.0014	0.0024	0.012
	12/15/11 [1]	200.7/200.8	0.0027	0.014	<0.002	<0.006	<0.006	0.23	<0.005	0.006	<0.001	0.0019	0.053
	10/26/11	200.7/200.8	<0.001	0.016	<0.002	<0.006	<0.006	<0.02	<0.005	0.06	<0.001	0.0022	0.045
PW-3	11/20/19	200.7/200.8	0.0034	0.01	<0.002	<0.006	<0.006	0.028	<0.0025	0.00078	0.0012	0.0013	0.055
	08/28/19	200.7/200.8	0.0037	0.0096	<0.002	<0.006	<0.006	0.028	<0.0005	0.001	0.0011	0.0013	0.015
	05/14/19	200.7/200.8	0.00358	0.0099	<0.002	<0.006	<0.006	0.019	<0.0025	0.00066	<0.005	0.0014	0.065
	02/20/19	200.7/200.8	0.037	0.0099	<0.002	<0.006	<0.006	0.033	<0.0005	0.0013	0.00089	0.0014	0.029
	11/20/18	200.7/200.8	0.0037	0.01	<0.002	<0.006	<0.006	0.028	<0.0005	0.0011	0.00076	NA	0.028
	09/19/18	200.7/200.8	0.0046	0.011	<0.002	<0.006	<0.006	0.039	<0.0005	0.00095	0.00084	0.0016	0.0074
	09/18/17	200.7/200.8	0.0038	0.011	<0.002	<0.006	<0.006	0.055	<0.0005	0.002	0.0022	NA	0.038
	08/31/16	200.7/200.8	0.0035	0.011	<0.002	<0.006	<0.006	0.092	<0.0005	0.0014	0.0018	0.0015	0.011
	08/23/15	200.7/200.8	0.0034	0.011	<0.002	<0.006	<0.006	0.034	<0.0005	<0.002	0.0014	0.0016	<0.01
	09/10/14	200.7/200.8	0.0039	0.011	<0.002	<0.006	<0.006	0.13	<0.001	<0.002	0.002	0.0016	0.011
	09/10/13	200.7/200.8	0.0037	0.011	<0.002	<0.006	<0.006	0.28	<0.001	0.0036	0.0014	0.0016	0.029
	08/24/12	200.7/200.8	0.0034	0.011	<0.002	<0.006	<0.006	0.042	<0.005	<0.002	0.0012	0.0015	0.03
	10/31/11	200.7/200.8	0.0033	0.011	<0.002	<0.006	<0.006	0.079	<0.005	0.0035	0.0012	0.0014	0.06
	09/23/10	6010B	*<0.02**	<0.02	<0.002	<0.006	<0.006	0.098	<0.005	<0.002	*<0.05**	0.001	<0.05

8.6.2 PW-2, PW-3, PW-4
Dissolved Metals Analytical Result Summary

STANDARDS			PARAMETERS										
			Arsenic (mg/L)	Barium (mg/L)	Cadmium (mg/L)	Chromium (mg/L)	Copper (mg/L)	Iron (mg/L)	Lead (mg/L)	Manganese (mg/L)	Selenium (mg/L)	Uranium (mg/L)	Zinc (mg/L)
WQCC 20NMAC 6.2.3103 (DECEMBER 2018)			**0.01**	**2.0**	**0.005**	**0.05**	**1**	**1.0**	**0.015**	**0.2**	**0.05**	**0.03**	**10.0**
40 CFR 141.62 MCL			0.01	2.0	0.005	0.1	1.3	NE	0.015	NE	0.05	0.03	NE
NMED TAP WATER (Rev 2. JUN 2019)			0.000855	3.28	0.00624	0.0057	0.7898	13.8	NE	2.02	0.0987	0.0592	5.96
EPA RSL for Tap Water (NOV 2019)			0.00052	3.8	0.0092	22	0.8	14	0.015	0.43	0.1	0.004	6
Well ID	**DATE SAMPLED**	**METHOD**											
PW-4	11/20/19	200.7/200.8	0.0027	0.013	<0.002	<0.006	<0.006	0.075	<0.0025	0.0013	0.0012	0.0013	0.061
	05/14/19	200.7/200.8	0.0031	0.013	<0.002	<0.006	<0.006	0.033	<0.0025	0.00049	0.0017	0.0015	0.038
	02/20/19	200.7/200.8	0.0031	0.013	<0.002	<0.006	<0.006	0.031	<0.0005	0.00034	0.00096	0.0015	0.047
	11/19/18	200.7/200.8	0.0033	0.012	<0.002	<0.006	<0.006	0.061	<0.0005	0.00068	0.001	0.0015	0.033
	09/19/18	200.7/200.8	0.0038	0.014	<0.002	<0.006	<0.006	0.085	<0.005	0.00084	0.00099	0.0016	0.0083
	03/01/18	200.7/200.8	0.0027	0.012	<0.002	<0.006	<0.006	<0.0005	<0.0005	0.0094	<0.005	0.0013	0.0067
	09/18/17	200.7/200.8	0.0031	0.014	<0.002	<0.006	<0.006	0.04	<0.0005	0.00074	0.0016	NA	0.053
	03/30/17	200.7/200.8	0.0030	0.013	<0.002	<0.006	<0.006	0.074	<0.0005	0.00088	0.0018	0.0015	0.031
	08/31/16	200.7/200.8	0.0029	0.014	<0.002	<0.006	<0.006	0.061	<0.0005	0.00098	0.0018	0.0015	<0.01
	06/10/16	200.7/200.8	0.003	0.014	<0.002	<0.006	<0.006	0.11	<0.0005	0.0012	0.0017	0.0016	<0.01
	09/10/13	200.7/200.8	0.003	0.014	<0.002	<0.006	<0.006	0.12	<0.001	0.007	0.0012	0.0016	<0.01
	07/28/10	6010B	*<0.02**	<0.02	<0.002	<0.006	<0.006	0.09	<0.005	0.0036	*<0.05**	0.00146	0.086

DEFINITIONS

NA = Not analyzed; NE = Not established

Bold and highlighted values represent values above the applicable standards

STANDARDS

WQCC 20 NMAC 6.2.3103 - Standards for Ground Water of 10,000 mg/l TDS Concentration or Less.

a) Human Health Standards; b) Other Standards for Domestic Water

40 CFR 141.62 Detection Limits for Inorganic Contaminants

EPA Regional Screening Level (RSL) Summary Table

NMED Risk Assessment Guidance for Investigations and Remediations Table A-1

NOTES

1) PW-2 was re-sampled on 12/15/2011 due to detection of PCE during the Annual sampling event on 10/26/2011.
In the field blank submitted with the 10/26/11 sampling, toluene was detected at 0.0017 ppm.

8.6.3 PW-2, PW-3, PW-4

Volatile and Semi-Volatile Organic Compound Analytical Result Summary

STANDARDS			Parameters																	
			Benzoic acid (mg/L)	Bis(2-ethylhexyl) phthalate (mg/L)	Di-n-octyl phthalate (mg/L)	Diethyl phthalate (mg/L)	Dimethyl phthalate (mg/L)	2,4-Dimethyl phenol (mg/L)	2-Methyl phenol (mg/L)	3+4-Methyl phenol (mg/L)	Phenan threne (mg/L)	Phenol (mg/L)	1,2,4-Trimethyl benzene (mg/L)	1,3,5-Trimethyl benzene (mg/L)	Naphthalene (mg/L)	1-Methyl naphthalene (mg/L)	2-Methyl naphthalene (mg/L)	Acetone (mg/L)	n-Propyl benzene (mg/L)	Tetrachloro ethene (PCE) (mg/L)
WQCC 20NMAC 6.2.3103 (DECEMBER 2018)			NE	NE	NE	NE	NE	NE	NE	NE	NE	**0.005**	NE	NE	**0.03**	NE	NE	NE	NE	**0.005**
40 CFR 141.62 MCL			NE	**0.006**	NE	NE	NE	NE	NE	NE	NE	NE	NE	NE	NE	NE	NE	NE	NE	0.005
NMED TAP WATER (Rev 2. JUN 2019)			NE	0.0556	NE	**14.8**	**0.612**	**0.354**	NE	NE	**0.17**	5.76	NE	NE	0.00165	**0.0114**	**0.035**	**14.06**	NE	0.1129
EPA RSL for Tap Water (NOV 2019)			**75**	0.056	**0.2**	15	NE	0.36	**0.93**	**0.93**	NE	5.8	**0.056**	**0.06**	0.0017	0.011	0.036	14	**0.66**	0.011
WELL ID	**DATE SAMPLED**	**METHOD**																		
PW-2	09/18/17	8270C/8260B	0.01	*<0.01**	0.0051	<0.01	<0.01	<0.01	<0.01	<0.01	<0.01	*<0.01**	<0.001	<0.001	<0.002	<0.004	<0.004		<0.001	<0.001
	09/10/14	8270C/8260B						<0.01	<0.02	<0.01	<0.01	*<0.01**					<0.01			<0.001
	12/15/11 [3]	8270C/8260B						<0.01	<0.01	<0.01	<0.01	*<0.01**					<0.01			<0.001
	10/26/11	8270C/8260B						<0.01	<0.01	<0.01	<0.01	*<0.01**					<0.004			**0.0073 [2]**
PW-3	11/20/19	8270D/8260B	<0.0005	0.00135	<0.0005	<0.0005	<0.0005	<0.0005	<0.0005	<0.0005	<0.0005	<0.0005					<0.0005	<0.01		<0.001
	08/28/19	8270C/8260B	<0.02	*<0.01**	<0.01	<0.01	<0.01	<0.01	<0.01	<0.01	<0.01	*<0.01**					<0.004	0.002		<0.001
	05/14/19	8270C/8260B	<0.02	*<0.01**	<0.01	<0.01	<0.01	<0.01	<0.01	<0.01	<0.01	*<0.01**					<0.004	0.007		<0.001
	02/20/19	8270C/8260B	0.014	*<0.01**	<0.01	<0.01	<0.01	<0.01	<0.01	<0.01	<0.01	*<0.01**					<0.004	<0.01		<0.001
	11/20/18	8270C/8260B	<0.01	*<0.01**	<0.01	<0.01	<0.01	<0.01	<0.01	<0.01	<0.01	*<0.01**					<0.004	0.027		<0.001
	09/19/18	8270C/8260B	<0.02	*<0.01**	<0.01	<0.01	<0.01	<0.01	<0.01	<0.01	<0.01	*<0.01**					<0.004			<0.001
	09/18/17	8270C/8260B	<0.02	0.0052	0.0048	<0.01	<0.01	<0.01	<0.01	<0.01	<0.01	*<0.01**					<0.004			<0.001
	08/31/16	8270C/8260B	0.0085	0.0041	0.0043	0.0037	0.0079	<0.01	<0.01	<0.01	<0.01	*<0.01**					<0.01			<0.001
	08/23/15	8270C/8260B						<0.01	<0.01	<0.01	<0.01	*<0.01**					<0.01			<0.001
	09/10/14	8270C/8260B						<0.01	<0.01	<0.01	<0.01	*<0.01**					<0.01			<0.001
	09/10/13	8270C/8260B						<0.01	<0.01	<0.01	<0.01	*<0.01**					<0.01			<0.001
	08/24/12	8270C/8260B						<0.01	<0.01	<0.01	<0.01	*<0.01**					<0.01			<0.001
	10/31/11	8270C/8260B						<0.01	<0.01	<0.01	<0.01	*<0.01**					<0.01			
	11/01/10	8270C						<0.01	<0.01	<0.01	<0.01	*<0.01**					<0.01			
	09/23/10	8270C						<0.01	<0.01	<0.01	<0.01	*<0.01**					<0.01			
	08/21/08	8270C						<0.01	<0.01	<0.01	<0.01	*<0.01**					<0.01			
	01/01/08 [1]	8270C						0.016	0.21	0.36	0.017	**0.8**					0.032			
PW-4	11/20/19	8270D/8260B	<0.0005	<0.0005	<0.0005	<0.0005	<0.0005						<0.001	<0.001	<0.0005	<0.0005	<0.0005	<0.01	<0.001	
	08/27/19	8270/8260B	<0.02	*<0.01**	<0.01	<0.01	<0.01						<0.001	<0.001	<0.002	<0.004	<0.004	<0.01	<0.001	
	05/14/19	8270/8260B	<0.02	*<0.01**	<0.01	<0.01	<0.01						0.00023	<0.001	<0.002	<0.004	<0.004	0.0071	<0.001	
	02/20/19	8270/8260B	0.0075	*<0.01**	<0.01	<0.01	<0.01						<0.001	<0.001	<0.002	<0.004	<0.004	<0.010	<0.001	
	11/19/18	8270/8260B	<0.2	*<0.1**	<0.1	<0.1	<0.1						<0.001	<0.001	<0.002	<0.004	<0.004		<0.001	
	09/19/18	8270/8260B	<0.2	*<0.1**	<0.1	<0.1	<0.1						<0.001	<0.001	<0.002	<0.004	<0.004		<0.001	
	03/01/18	8270/8260B	<0.02	**0.0062**	<0.01	<0.01	<0.01						<0.001	<0.001	<0.002	<0.004	<0.004		<0.001	
	09/18/17	8270	<0.02	0.0053	<0.01	<0.01	<0.01						<0.001	<0.001	<0.002	<0.004	<0.004		<0.001	
	03/30/17	8270	0.0074	**0.0069**	<0.01	<0.01	<0.01						<0.0005	<0.0005	<0.001	<0.002	<0.002		<0.0005	
	08/31/16	8270	0.0087	0.0031	0.0038	0.0029	0.0064						<0.001	<0.001	<0.002	<0.004	<0.004		<0.001	
	06/10/16	8270C/8260B		0.0038	0.0054								0.00045	0.00031	0.00048	0.00072	0.00083		<0.001	
	09/09/13	8260B											0.0068 [4]	0.0023 [4]					0.0013 [4]	

DEFINITIONS

NA = Not analyzed; NE = Not established

Bold and highlighted values represent values above the applicable standards

STANDARDS

WQCC 20 NMAC 6.2.3103 - Standards for Ground Water of 10,000 mg/l TDS Concentration or Less.

a) Human Health Standards; b) Other Standards for Domestic Water

40 CFR 141.62 Detection Limits for Inorganic Contaminants

EPA Regional Screening Level (RSL) Summary Table

NMED Risk Assessment Guidance for Investigations and Remediations Table A-1

NOTES

Items notes with a * and italics have a detection limit greater than or equal to the applicable standard.

1) Due to inclement weather conditions in December 2007, the 2007 annual sampling was completed in January 2008.

2) PW-2: Detected for the first time. In the field blank submitted, toluene was detected at 0.0017 mg/L.

3) PW-2 was re-sampled due to the detection of PCE in the 10/26/2011 sample.

4) PW-4: Detected for the first time.

8.7 GWM-1, GWM-2, GWM-3
BTEX and MTBE Analytical Result Summary

			PARAMETERS				
			Benzene (mg/L)	Toluene (mg/L)	Ethylbenzene (mg/L)	Total Xylenes (mg/L)	MTBE (mg/L)
WQCC 20 NMAC 6.2.3103 (DEC 2018)			**0.005**	**1**	**0.7**	**0.62**	**0.1**
40 CFR 141.62 MCL			0.005	1	0.7	10	NE
NMED TAP WATER (JUNE 2019)			0.00455	1.09	0.0149	0.193	0.143
EPA RSL for Tap Water (NOVEMBER 2019)			0.0046	1.1	0.0015	0.19	0.14
WELL ID	**DATE SAMPLED**	**METHOD**					
GWM-1	2019 - 2016	--	NO SAMPLES COLLECTED - SPH DETECTED				
	10/29/15	--	NO SAMPLES COLLECTED - SPH DETECTED				
	08/24/15	8260B	**0.0085**	0.033	0.011	0.11	0.04
	06/02/15	8021B	**0.012**	0.0033	0.0056	0.024	0.051
	03/10/15	8021B	**0.011**	0.0022	0.0051	0.021	0.049
	11/13/14	8260B	**0.012**	<0.005	0.0057	0.023	0.05
	09/12/14	8260B	**0.01**	0.0031	0.004	0.016	0.041
	06/05/14	8260B	**0.011**	0.0021	0.0048	0.019	0.051
	03/11/14	8260B	**0.0088**	0.0022	0.0037	0.015	0.039
	11/11/13	8260B	**0.008**	0.0023	0.0038	0.014	0.039
	09/03/13	8260B	**0.008**	<0.005	<0.005	0.016	0.035
	06/12/13	8260B	**0.0077**	0.0048	0.0039	0.018	0.04
	03/18/13	8260B	**0.0098**	<0.005	<0.005	0.018	0.043
	11/28/12	8260B	*<0.01**	<0.01	<0.01	<0.015	0.052
	08/21/12	8260B	**0.0078**	0.0024	0.0035	0.015	0.044
	06/12/12	8260B	**0.0053**	0.0014	0.0025	0.0094	0.04
	03/20/12	8260B	**0.0057**	<0.001	0.0019	0.007	0.054
	12/14/11	8260B	**0.0085**	0.0019	0.0042	0.014	0.054
	09/26/11	8260B	**0.0096**	0.0052	0.0059	0.03	0.051
	06/15/11	8260B	**0.0074**	0.0027	0.0053	0.026	0.047
	02/16/11	8260B	**0.0095**	0.0034	0.0054	0.023	0.057
	11/02/10	8260B	**0.0069**	0.0023	0.0035	0.022	0.062
	09/16/10	8260B	**0.0075**	0.0049	0.0067	0.03	0.053
	07/20/10	8260B	**0.008**	0.002	0.0068	0.03	0.077
	03/03/10[2]	8260B	**0.012**	0.005	0.011	0.05	0.078
GWM-2	2019 - 2014	--	DRY				
	11/11/13	--	INSUFFICIENT WATER VOLUME TO SAMPLE				
	09/03/13	8260B	<0.001	<0.001	<0.001	<0.0015	0.0023
	06/12/13	8260B	<0.001	<0.001	<0.001	<0.0015	0.0026
	03/18/13	8260B	<0.001	<0.001	<0.001	<0.0015	0.002
	11/28/12	8021B	<0.001	<0.001	<0.001	<0.002	<0.0025
	08/21/12	8260B	<0.001	<0.001	<0.001	<0.0015	0.0026
	06/12/12	8021B	*<0.005**	<0.005	<0.005	<0.01	<0.012
	03/20/12	8021B	*<0.005**	<0.005	<0.005	<0.01	<0.012
	12/14/11	8021B	<0.001	<0.001	<0.001	<0.001	0.0027
	09/26/11	8021B	<0.001	<0.001	<0.001	<0.002	0.0026
	06/15/11	8260B	<0.001	<0.001	<0.001	<0.0015	0.003
	02/16/11	8260B	<0.001	<0.001	<0.001	<0.0015	0.0083
	10/04/10	8260B	<0.001	<0.001	<0.001	<0.003	0.011
	09/16/10	8260B	<0.001	<0.001	<0.001	<0.003	0.011

8.7 GWM-1, GWM-2, GWM-3
BTEX and MTBE Analytical Result Summary

			PARAMETERS				
			Benzene (mg/L)	Toluene (mg/L)	Ethylbenzene (mg/L)	Total Xylenes (mg/L)	MTBE (mg/L)
WQCC 20 NMAC 6.2.3103 (DEC 2018)			**0.005**	**1**	**0.7**	**0.62**	**0.1**
40 CFR 141.62 MCL			0.005	1	0.7	10	NE
NMED TAP WATER (JUNE 2019)			0.00455	1.09	0.0149	0.193	0.143
EPA RSL for Tap Water (NOVEMBER 2019)			0.0046	1.1	0.0015	0.19	0.14
WELL ID	**DATE SAMPLED**	**METHOD**					
GWM-3	2019 - 2013	--	DRY				
	11/28/12	8021B	<0.001	<0.001	<0.001	<0.002	<0.0025
	08/21/12	8260B	<0.001	<0.001	<0.001	<0.0015	0.0015
	06/12/12	8021B	*<0.005**	<0.005	<0.005	<0.01	<0.012
	03/20/12	8021B	*<0.005**	<0.005	<0.005	<0.01	<0.012
	12/14/11	8021B	<0.001	<0.001	<0.001	<0.002	<0.0025
	09/26/11	8021B	<0.001	<0.001	<0.001	<0.002	<0.0025
	06/15/11	8260B	<0.001	<0.001	<0.001	<0.0015	0.002
	02/16/11	8260B	<0.001	<0.001	<0.001	<0.0015	0.0081
	10/04/10	8260B	<0.001	<0.001	<0.001	<0.003	0.0092
	09/16/10	8260B	<0.001	<0.001	<0.001	<0.003	0.009

DEFINITIONS

NA = Not analyzed; NE = Not established

Bold and highlighted values represent values above the applicable standards

STANDARDS

WQCC 20 NMAC 6.2.3103 - Standards for Ground Water of 10,000 mg/l TDS Concentration or Less.

a) Human Health Standards; b) Other Standards for Domestic Water

40 CFR 141.62 Detection Limits for Inorganic Contaminants

NMED Risk Assessment Guidance for Investigations and Remediations Table A-1

EPA Regional Screening Level (RSL) Summary Table

NOTES

Wells marked in red were not sampled because SPH was present in the well or the well was dry

Items notes with a * and italics have a detection limit greater than or equal to the applicable standard.

8.7.1 GWM-1, GWM-2, GWM-3
General Chemistry and DRO/GRO/MRO Analytical Result Summary

			PARAMETERS						
			Fluoride (mg/L)	Chloride (mg/L)	Nitrite (mg/L)	Nitrate (mg/L)	DRO (mg/L)	GRO (mg/L)	MRO (mg/L)
WQCC 20 NMAC 6.2.3103 (DEC 2018)			**1.6**	**250.0**	**1**	**10**	NE	NE	NE
40 CFR 141.62 MCL			4	NE	1	10	NE	NE	NE
NMED TAP WATER (JUNE 2019)			1.18	NE	1.97	31.60	NE	NE	NE
EPA RSL for Tap Water (NOVEMBER 2019)			0.8	NE	2	32	NE	NE	NE
NMED SSG (JUNE 2019)			NE	NE	NE	NE	**0.0167**	**0.0101**	**0.0858**
WELL ID	DATE SAMPLED	METHOD							
GWM-1	2019 - 2016	--	NO SAMPLES COLLECTED - SPH DETECTED						
	10/29/15	--	NO SAMPLES COLLECTED - SPH DETECTED						
	09/23/15 [1]	8015D	NA	NA	NA	NA	**68**	*<2.5**	**18**
	08/24/15	300.0/8015D	**2.6**	**1100**	*<1.0**	<1.0	**250**	**1.2**	*<50**
	06/02/15	300.0/8015D	**2.7**	**1100**	*<2.0**	<2.0	**1.7**	NA	*<5.0**
	03/10/15	300.0/8015D	**2.2**	**1000**	<0.5	<0.5	**2.4**	**0.49**	*<5.0**
	11/13/14	300.0/8015B	**1.8**	**1000**	*<1.0**	<1.0	**2.3**	**0.5**	*<5.0**
	09/12/14	300.0/8015B	**2.4**	**910**	*<1.0**	<1.0	**2.1**	**0.51**	*<5.0**
	06/05/14	300.0/8015B	**2.2**	**890**	*<1.0**	<1.0	**3.4**	**0.56**	*<5.0**
	03/11/14	300.0/8015B	**2.6**	**930**	*<1.0**	<1.0	**3.3**	**0.66**	*<5.0**
	11/11/13	300.0/8015B	**2.3**	**1000**	**4.1**	4.1	**7.1**	**0.49**	NA
	09/03/13	300.0/8015B	**3.1**	**960**	**35**	**35**	**2.3**	**0.49**	*<5.0**
	06/12/13	300.0/8015B	**2.7**	**940**	*<1.0**	<1.0	**3.9**	**0.66**	*<5.0**
	03/18/13	300.0/8015B	**2.7**	**1000**	*<1.0**	<1.0	**5.3**	**0.57**	*<5.0**
	11/28/12	300.0/8015B	**3.2**	**1000**	<0.5	<0.5	**1.6**	**1.1**	*<5.0**
	08/21/12	300.0/8015B	**3**	**1200**	<0.5	<0.5	*<1.0**	**1.2**	*<5.0**
	06/12/12	300.0/8015B	**3.4**	**1300**	<0.5	<0.5	*<1.0**	**1.2**	*<5.0**
	03/20/12	300.0/8015B	**3.6**	**1200**	<0.5	<0.5	**3.5**	**1**	*<5.0**
	12/14/11	300.0/8015B	1.2	**1300**	*<1.0**	<1.0	**2.9**	**0.81**	*<5.0**
	09/26/11	300.0/8015B	**3.5**	**1300**	*<4.0**	<4.0	**3.9**	**0.65**	*<5.0**
	06/15/11	300.0/8015B	**2.6**	**1200**	*<2.0**	<2.0	**4**	**0.53**	*<5.0**
	02/16/11	300.0/8015B	**2.8**	**1400**	**2.1**	2.1	**5.4**	**0.7**	*<5.0**
	11/02/10	300.0/8015B	**3.5**	**1300**	*<1.0**	<1.0	**6**	**0.68**	
	09/16/10	300.0/8015B	**2.9**	**1400**	*<4.0**	<4.0	**7.7**	**0.71**	
	07/20/10	300.0	**2.9**	**1500**	*<4.0**	<4.0	NA	NA	
	03/03/10	300.0/8015B	**2.1**	**1600**	*<4.0**	<4.0	**3.9**	**0.88**	

8.7.1 GWM-1, GWM-2, GWM-3

General Chemistry and DRO/GRO/MRO Analytical Result Summary

			PARAMETERS						
			Fluoride (mg/L)	Chloride (mg/L)	Nitrite (mg/L)	Nitrate (mg/L)	DRO (mg/L)	GRO (mg/L)	MRO (mg/L)
WQCC 20 NMAC 6.2.3103 (DEC 2018)			**1.6**	**250.0**	**1**	**10**	NE	NE	NE
40 CFR 141.62 MCL			4	NE	1	10	NE	NE	NE
NMED TAP WATER (JUNE 2019)			1.18	NE	1.97	31.60	NE	NE	NE
EPA RSL for Tap Water (NOVEMBER 2019)			0.8	NE	2	32	NE	NE	NE
NMED SSG (JUNE 2019)			NE	NE	NE	NE	**0.0167**	**0.0101**	**0.0858**
WELL ID	**DATE SAMPLED**	**METHOD**							
GWM-2	2019 - 2014	--	DRY						
	11/11/13	--	INSUFFICIENT WATER VOLUME TO SAMPLE						
	09/03/13	300.0/8015B	0.84	**990**	**44**	**44**	*<1.0**	*<0.05**	*<5.0**
	06/12/13	300.0/8015B	<1.0	**960**	*<1.0**	<1.0	*<1.0**	*<0.05**	*<5.0**
	03/18/13	300.0/8015B	1.6	**1100**	*<2.0**	<2.0	*<1.0**	**0.052**	*<5.0**
	11/28/12	300.0/8015B	**3.8**	**1000**	<0.5	**15**	*<1.0**	*<0.5**	*<5.0**
	08/21/12	300.0/8015B	**2.8**	**1200**	<0.5	**14**	*<1.0**	*<0.25**	*<5.0**
	06/12/12	300.0/8015B	**3.5**	**1200**	<0.5	**24**	*<1.0**	*<0.25**	*<5.0**
	03/20/12	300.0/8015B	**3.6**	**1500**	<0.5	**38**	**2.4**	*<0.25**	*<5.0**
	12/14/11	300.0/8015B	0.48	**2100**	**25**	**25**	*<1.0**	*<0.05**	*<5.0**
	09/26/11	300.0/8015B	1.6	**2200**	**52**	**52**	*<1.0**	*<0.05**	*<5.0**
	06/15/11	300.0/8015B	**3.1**	**2200**	**66**	**66**	*<1.0**	*<0.05**	*<5.0**
	02/16/11	300.0/8015B	0.43	**910**	**2.6**	2.6	*<1.0**	*<0.05**	
	10/04/10	300.0/8015B	0.52	**1800**	*<4.0**	<4.0	*<1.0**	*<0.05**	
	09/16/10	300.0/8015B	0.46	**1400**	*<4.0**	<4.0	*<1.0**	*<0.05**	

8.7.1 GWM-1, GWM-2, GWM-3
General Chemistry and DRO/GRO/MRO Analytical Result Summary

			PARAMETERS						
			Fluoride (mg/L)	Chloride (mg/L)	Nitrite (mg/L)	Nitrate (mg/L)	DRO (mg/L)	GRO (mg/L)	MRO (mg/L)
WQCC 20 NMAC 6.2.3103 (DEC 2018)			**1.6**	**250.0**	**1**	**10**	NE	NE	NE
40 CFR 141.62 MCL			4	NE	1	10	NE	NE	NE
NMED TAP WATER (JUNE 2019)			1.18	NE	1.97	31.60	NE	NE	NE
EPA RSL for Tap Water (NOVEMBER 2019)			0.8	NE	2	32	NE	NE	NE
NMED SSG (JUNE 2019)			NE	NE	NE	NE	**0.0167**	**0.0101**	**0.0858**
WELL ID	DATE SAMPLED	METHOD							
GWM-3	2019 - 2013	--	DRY						
	11/28/12	300.0/8015B	**5.6**	**1200**	<0.5	8.8	*<1.0**	**0.088**	*<5.0**
	08/21/12	300.0/8015B	**4.9**	**1200**	<0.5	**43**	*<1.0**	*<0.25**	*<5.0**
	06/12/12	300.0/8015B	**4.4**	**1400**	<0.5	6.2	*<1.0**	*<0.25**	*<5.0**
	03/20/12	300.0/8015B	**4.9**	**1300**	<0.5	**18**	**2.7**	*<0.25**	*<5.0**
	12/14/11	300.0/8015B	**5**	**1400**	**51**	**51**	**1.3**	*<0.05**	*<5.0**
	09/26/11	300.0/8015B	**5.3**	**1000**	**130**	**130**	**2.7**	*<0.05**	*<5.0**
	06/15/11	300.0/8015B	**5.5**	**610**	*<2.0**	<2.0	**1.1**	**0.12**	*<5.0**
	02/16/11	300.0/8015B	**4.2**	**1100**	**61**	**61**	*<1.0**	*<0.05**	*<5.0**
	10/04/10	300.0/8015B	**5.9**	**1800**	**61**	**61**	**1.3**	**0.12**	
	09/16/10	300.0/8015B	**4.7**	**2000**	**66**	**66**	**3.7**	**0.066**	

DEFINITIONS

NA = Not analyzed; NE = Not established

Bold and highlighted values represent values above the applicable standards

STANDARDS

WQCC 20 NMAC 6.2.3103 - Standards for Ground Water of 10,000 mg/l TDS Concentration or Less.

a) Human Health Standards; b) Other Standards for Domestic Water

40 CFR 141.62 Detection Limits for Inorganic Contaminants

NMED Risk Assessment Guidance for Investigations and Remediations Table A-1

EPA Regional Screening Level (RSL) Summary Table

NMED Soil Screening Guidance Volume 1, Table 6-4 (groundwater)

NOTES

Wells marked in red were not sampled because SPH was present in the well or the well was dry

Items notes with a * and italics have a detection limit greater than or equal to the applicable standard.

1) Oil sample collected from GWM-1 - sampled for DRO/GRO/MRO only.

8.7.2 GWM-1, GWM-2, GWM-3

Total Metals Analytical Result Summary

			PARAMETERS										
			Arsenic (mg/L)	Barium (mg/L)	Chromium (mg/L)	Copper (mg/L)	Iron (mg/L)	Lead (mg/L)	Manganese (mg/L)	Selenium (mg/L)	Mercury (ug/L)	Uranium (mg/L)	Zinc (mg/L)
WQCC 20 NMAC 6.2.3103 (DEC 2018)			**0.01**	**2**	**0.05**	**1**	**1**	**0.015**	**0.2**	**0.05**	**2**	**0.03**	**10**
40 CFR 141.62 MCL			0.01	2	0.1	1.3	NE	0.015	NE	0.05	2	0.03	NE
NMED TAP WATER (JUNE 2019)			0.000855	3.28	0.0057	0.7898	13.8	NE	2.02	0.0987	0.626	0.0592	5.96
EPA RSL for Tap Water (NOVEMBER 2019)			0.000052	3.8	NE	0.8	14	0.015	0.43	0.1	0.63	0.004	6
WELL ID	**DATE SAMPLED**	**METHOD**											
GWM-1	2019 - 2016	--	NO SAMPLES COLLECTED - SPH DETECTED										
	10/29/15	--	NO SAMPLES COLLECTED - SPH DETECTED										
	08/24/15	200.7/200.8	**0.27**	0.47	<0.006	<0.006	**12**	0.0077	**2.1**	0.011	<0.2	0.015	0.025
	06/02/15	200.7/200.8	**0.11**	0.43	0.0072	<0.006	**11**	0.0079	**2**	<0.02	<0.2	0.016	0.022
	03/10/15	200.7/200.8	**0.13**	0.49	<0.006	<0.006	**12**	0.0055	**2.4**	<0.02	<0.2	0.016	0.02
	11/13/14	200.7/200.8	**0.16**	0.51	<0.006	0.0082	**17**	0.013	**2.2**	*<0.05**	<0.2	0.015	0.027
	09/12/14	200.7/200.8	**0.14**	0.67	<0.006	<0.006	**13**	0.0042	**2.6**	0.019	<0.2	0.015	0.018
	06/05/14	200.7/200.8	**0.13**	0.54	<0.006	<0.006	**13**	0.008	**2.5**	0.019	<0.2	0.012	0.021
	03/11/14	200.7/200.8	**0.12**	0.49	<0.006	<0.006	**14**	0.0062	**2.5**	0.015	<0.2	0.015	0.018
	11/11/13	200.7/200.8	**0.13**	0.51	<0.006	0.015	**17**	**0.017**	**2.2**	0.014	<0.2	0.015	0.038
	09/03/13	200.7/200.8	**0.12**	0.85	<0.006	<0.006	**15**	0.0041	**2.8**	0.01	<0.2	0.01	0.024
	06/12/13	200.7/200.8	**0.15**	0.93	<0.006	<0.006	**11**	NL	**3.1**	0.013	<0.2	0.0073	0.019
	03/18/13	200.7/200.8	**0.12**	0.88	<0.006	<0.006	**8**	0.0059	**2.9**	0.0039	<0.2	0.0055	0.012
	11/28/12	200.7/200.8	**0.092**	0.73	<0.006	0.021	**10**	0.012	**2.7**	0.0049	<0.2	0.016	0.021
	08/21/12	200.7/200.8	**0.09**	1.1	<0.006	0.0091	**9.8**	0.0056	**3.1**	0.0075	<0.2	0.0052	0.019
	06/12/12	200.7/200.8	**0.066**	0.84	<0.006	<0.006	**8.7**	0.011	**2.7**	0.0093	<1	0.011	0.019
	03/20/12	200.7/200.8	**0.073**	1.1	<0.006	<0.006	**8.9**	0.0058	**3**	0.01	<1	0.0069	0.016
	12/14/11	200.7/200.8	**0.097**	0.67	<0.006	0.029	**15**	**0.023**	**2.5**	0.0047	<0.2	0.02	0.041
	09/26/11	200.7/200.8	**0.12**	1.5	<0.006	<0.006	**17**	<0.005	**2.8**	0.0082	<0.2	0.007	0.025
	06/15/11	200.7/200.8	**0.14**	1.5	<0.006	<0.006	**17**	0.01	**2.8**	0.015	<0.2	0.0084	0.026
	02/16/11	200.7/200.8	**0.16**	0.94	0.0089	0.0089	**17**	0.0098	**3**	0.02	<0.2	0.015	0.038
	11/02/10	6010B	**0.14**	1.4	<0.006	<0.006	**7.9**	0.0095	**3**	*<0.05**	<0.2	0.009	0.025
	09/16/10	6010B	**0.12**	0.87	<0.006	0.0098	**15**	0.012	**2.9**	*<0.05**	<0.2	0.015	0.023
	07/20/10	6010B	**0.16**	1.2	<0.006	0.019	**20**	0.011	**3**	*<0.05**	<0.2	0.011	0.031
	03/03/10	6010B	**0.098**	0.42	<0.006	0.0072	**15**	0.0078	**3**	*<0.05**	<0.2	0.0224	0.03

8.7.2 GWM-1, GWM-2, GWM-3

Total Metals Analytical Result Summary

			PARAMETERS										
			Arsenic (mg/L)	Barium (mg/L)	Chromium (mg/L)	Copper (mg/L)	Iron (mg/L)	Lead (mg/L)	Manganese (mg/L)	Selenium (mg/L)	Mercury (ug/L)	Uranium (mg/L)	Zinc (mg/L)
WQCC 20 NMAC 6.2.3103 (DEC 2018)			**0.01**	**2**	**0.05**	**1**	**1**	**0.015**	**0.2**	**0.05**	**2**	**0.03**	**10**
40 CFR 141.62 MCL			0.01	2	0.1	1.3	NE	0.015	NE	0.05	2	0.03	NE
NMED TAP WATER (JUNE 2019)			0.000855	3.28	0.0057	0.7898	13.8	NE	2.02	0.0987	0.626	0.0592	5.96
EPA RSL for Tap Water (NOVEMBER 2019)			0.000052	3.8	NE	0.8	14	0.015	0.43	0.1	0.63	0.004	6
WELL ID	**DATE SAMPLED**	**METHOD**											
GWM-2	2018 - 2014	--	DRY										
	11/11/13	--	INSUFFICIENT WATER VOLUME TO SAMPLE										
	09/03/13	200.7/200.8	0.0076	0.059	<0.006	0.016	0.87	0.0094	**1.1**	0.014	<0.2	**0.16**	0.026
	06/12/13	200.7/200.8	*<0.01**	0.068	<0.006	0.012	**1.6**	NA	**1.1**	0.019	<0.2	**0.17**	0.021
	08/21/12	200.7/200.8	0.0066	0.04	<0.006	0.045	0.44	0.0071	**0.45**	0.0099	<0.2	**0.12**	0.025
GWM-3	2018 - 2013	--	DRY										
	08/21/12	200.7/200.8	0.0033	0.04	<0.006	0.22	**1.7**	**0.07**	**1**	0.0092	<0.2	**0.067**	0.47

DEFINITIONS

NA = Not analyzed; NE = Not established

Bold and highlighted values represent values above the applicable standards

STANDARDS

WQCC 20 NMAC 6.2.3103 - Standards for Ground Water of 10,000 mg/l TDS Concentration or Less.

a) Human Health Standards; b) Other Standards for Domestic Water

40 CFR 141.62 Detection Limits for Inorganic Contaminants

NMED Risk Assessment Guidance for Investigations and Remediations Table A-1

EPA Regional Screening Level (RSL) Summary Table

NOTES

Wells marked in red were not sampled because SPH was present in the well or the well was dry

Items notes with a * and italics have a detection limit greater than or equal to the applicable standard.

8.7.3 GWM-1, GWM-2, GWM-3
Dissolved Metals Analytical Result Summary

			PARAMETERS											
			Arsenic (mg/L)	Barium (mg/L)	Cadmium (mg/L)	Chromium (mg/L)	Copper (mg/L)	Iron (mg/L)	Lead (mg/L)	Manganese (mg/L)	Selenium (mg/L)	Sodium (mg/L)	Uranium (mg/L)	Zinc (mg/L)
WQCC 20 NMAC 6.2.3103 (DEC 2018)			**0.01**	**2**	**0.005**	**0.05**	**1**	**1**	**0.015**	**0.2**	**0.05**	NE	**0.03**	**10**
40 CFR 141.62 MCL			0.01	2	0.005	0.1	1.3	NE	0.015	NE	0.05	NE	0.03	NE
NMED TAP WATER (JUNE 2019)			0.000855	3.28	0.00624	0.0057	0.7898	13.8	NE	2.02	0.0987	NE	0.0592	5.96
EPA RSL for Tap Water (NOVEMBER 2019)			0.000052	3.8	0.0092	NE	0.8	14	0.015	0.43	0.1	NE	0.004	6
WELL ID	DATE SAMPLED	METHOD												
GWM-1	2019 - 2016	--	NO SAMPLES COLLECTED - SPH DETECTED											
	10/29/15	--	NO SAMPLES COLLECTED - SPH DETECTED											
	08/24/15	200.7/200.8	**0.14**	0.44	<0.002	<0.006	<0.006	**9.2**	0.0041	**2**	0.011	1100	0.015	0.026
	06/02/15	200.7/200.8	**0.11**	0.38	<0.002	0.008	<0.006	**11**	<0.01	**1.9**	0.011	1100	0.015	0.027
	03/10/15	200.7/200.8	**0.12**	0.56	<0.002	<0.006	<0.006	**9.8**	<0.005	**2.3**	<0.02	1100	0.011	0.021
	11/11/13	200.7/200.8	**0.14**	0.45	<0.002	<0.006	<0.006	**15**	<0.01	**2.3**	<0.01	1100	0.014	0.029
	09/12/14	200.7/200.8	**0.13**	0.78	<0.002	<0.006	<0.006	**11**	0.0026	**2.4**	0.02	1100	0.015	0.023
	06/05/14	200.7/200.8	**0.13**	0.56	<0.002	<0.006	<0.006	**12**	<0.005	**2.6**	0.018	NL	0.011	0.065
	03/11/13	200.7/200.8	**0.081**	0.47	<0.002	<0.006	<0.006	**2.4**	<0.001	**2.5**	<0.01	NL	0.015	0.021
	11/11/13	200.7/200.8	**0.11**	0.51	<0.002	<0.006	<0.006	**11**	0.0037	**2.2**	0.015	1200	0.014	0.11
	09/03/13	200.7/200.8	**0.12**	0.83	<0.002	<0.006	<0.006	**13**	<0.005	**2.7**	0.013	1100	0.011	0.1
	06/12/13	200.7/200.8	**0.12**	0.87	<0.002	<0.006	<0.006	**8.1**	0.0024	**3.2**	0.02	1000	0.0068	0.017
	03/18/13	200.7/200.8	**0.11**	0.83	<0.002	<0.006	<0.006	**6**	0.006	**2.8**	<0.005	860	0.005	0.013
	11/28/12	200.7/200.8	**0.084**	0.83	<0.002	<0.006	<0.006	**8.7**	0.0037	**2.9**	0.0055	1000	0.019	0.11
	08/21/12	200.7/200.8	**0.082**	**1.1**	<0.002	<0.006	<0.006	**6.8**	<0.005	**3.1**	0.0076	990	0.0038	0.03
	06/12/12	200.7/200.8	**0.054**	**1.1**	<0.002	<0.006	<0.006	**4**	<0.005	**2.9**	0.0099	980	0.0055	0.016
	03/20/12	200.7/200.8	**0.073**	0.97	<0.002	<0.006	<0.006	**9.4**	0.0052	**3**	0.0096	1100	0.006	0.067
	12/14/11	200.7/200.8	**0.088**	0.52	*<0.01**	<0.03	<0.03	**11**	*<0.025**	**2.3**	0.0067	1200	0.02	<0.05
	09/26/11	200.7/200.8	**0.12**	**1.3**	<0.002	<0.006	<0.006	**14**	<0.005	**2.7**	0.012	1200	0.0081	0.028
	06/15/11	200.7/200.8	**0.1**	**1.4**	*<0.01**	<0.03	<0.03	**14**	*<0.025**	**2.7**	0.025	1000	0.0075	0.063
	02/16/11	200.7/200.8	**0.15**	0.95	*<0.01**	<0.03	<0.03	**14**	*<0.025**	**2.9**	0.014	1200	0.013	<0.05
	11/02/10	6010B	*<0.2**	**1.3**	<0.002	<0.006	<0.006	**5.2**	0.0094	**3**	*<0.05**	1100	0.007	NL
	09/16/10	6010B	**0.12**	**1.2**	<0.002	<0.006	<0.006	**15**	0.0086	**2.9**	*<0.25**	1200	0.01	NL
	07/20/10 [2]	6010B	**0.15**	**1.1**	<0.002	<0.006	<0.006	**14**	0.0056	**2.9**	*<0.05**	1200	NL	<0.05
	03/02/10 [1]	6010B	**0.074**	0.38	<0.002	<0.006	<0.006	**12**	0.0084	**2.7**	*<0.05**	1200	0.028	0.059

8.7.3 GWM-1, GWM-2, GWM-3
Dissolved Metals Analytical Result Summary

			PARAMETERS											
			Arsenic (mg/L)	Barium (mg/L)	Cadmium (mg/L)	Chromium (mg/L)	Copper (mg/L)	Iron (mg/L)	Lead (mg/L)	Manganese (mg/L)	Selenium (mg/L)	Sodium (mg/L)	Uranium (mg/L)	Zinc (mg/L)
WQCC 20 NMAC 6.2.3103 (DEC 2018)			**0.01**	**2**	**0.005**	**0.05**	**1**	**1**	**0.015**	**0.2**	**0.05**	NE	**0.03**	**10**
40 CFR 141.62 MCL			0.01	2	0.005	0.1	1.3	NE	0.015	NE	0.05	NE	0.03	NE
NMED TAP WATER (JUNE 2019)			0.000855	3.28	0.00624	0.0057	0.7898	13.8	NE	2.02	0.0987	NE	0.0592	5.96
EPA RSL for Tap Water (NOVEMBER 2019)			0.000052	3.8	0.0092	NE	0.8	14	0.015	0.43	0.1	NE	0.004	6
WELL ID	DATE SAMPLED	METHOD												
GWM-2	2019 - 2014	--	DRY											
	11/11/13	--	INSUFFICIENT WATER VOLUME TO SAMPLE											
	09/03/13	200.7/200.8	0.0084	0.036	<0.002	<0.006	0.014	0.19	0.0081	**1.1**	0.018	1000	**0.17**	0.059
	06/12/13	200.7/200.8	0.0093	0.029	<0.002	<0.006	0.011	0.12	0.0081	**1.3**	0.023	1100	**0.17**	0.02
	03/18/13	CATIONS	NA	NA	NA	NA	NA	NA	NA	NA	NA	1100	NA	NA
	11/28/12	CATIONS	NA	NA	NA	NA	NA	NA	NA	NA	NA	1300	NA	NA
	08/21/12	200.7/200.8	0.0069	0.033	<0.002	<0.006	0.041	0.13	0.012	**0.55**	0.012	1300	**0.12**	0.039
	06/12/12	CATIONS	NA	NA	NA	NA	NA	NA	NA	NA	NA	1400	NA	NA
	03/20/12	CATIONS	NA	NA	NA	NA	NA	NA	NA	NA	NA	1500	NA	NA
	12/14/11	CATIONS	NA	NA	NA	NA	NA	NA	NA	NA	NA	1500	NA	NA
	09/26/11	CATIONS	NA	NA	NA	NA	NA	NA	NA	NA	NA	1600	NA	NA
	06/15/11	CATIONS	NA	NA	NA	NA	NA	NA	NA	NA	NA	1600	NA	NA
	02/16/11	CATIONS	NA	NA	NA	NA	NA	NA	NA	NA	NA	1000	NA	NA
	10/04/10	CATIONS	NA	NA	NA	NA	NA	NA	NA	NA	NA	910	NA	NA
	09/16/10	CATIONS	NA	NA	NA	NA	NA	NA	NA	NA	NA	NA	NA	NA

8.7.3 GWM-1, GWM-2, GWM-3
Dissolved Metals Analytical Result Summary

			PARAMETERS											
			Arsenic (mg/L)	Barium (mg/L)	Cadmium (mg/L)	Chromium (mg/L)	Copper (mg/L)	Iron (mg/L)	Lead (mg/L)	Manganese (mg/L)	Selenium (mg/L)	Sodium (mg/L)	Uranium (mg/L)	Zinc (mg/L)
WQCC 20 NMAC 6.2.3103 (DEC 2018)			**0.01**	**2**	**0.005**	**0.05**	**1**	**1**	**0.015**	**0.2**	**0.05**	NE	**0.03**	**10**
40 CFR 141.62 MCL			0.01	2	0.005	0.1	1.3	NE	0.015	NE	0.05	NE	0.03	NE
NMED TAP WATER (JUNE 2019)			0.000855	3.28	0.00624	0.0057	0.7898	13.8	NE	2.02	0.0987	NE	0.0592	5.96
EPA RSL for Tap Water (NOVEMBER 2019)			0.000052	3.8	0.0092	NE	0.8	14	0.015	0.43	0.1	NE	0.004	6
WELL ID	DATE SAMPLED	METHOD												
GWM-3	2019 - 2013	--	DRY											
	11/28/12	CATIONS	NA	NA	NA	NA	NA	NA	NA	NA	NA	1200	NA	NA
	08/21/12	200.7/200.8	<0.005	0.029	<0.002	<0.006	0.23	0.88	**0.063**	**1.7**	0.0099	1200	**0.066**	0.46
	06/12/12	CATIONS	NA	NA	NA	NA	NA	NA	NA	NA	NA	1300	NA	NA
	03/20/12	CATIONS	NA	NA	NA	NA	NA	NA	NA	NA	NA	1400	NA	NA
	12/14/11	CATIONS	NA	NA	NA	NA	NA	NA	NA	NA	NA	1300	NA	NA
	09/26/11	CATIONS	NA	NA	NA	NA	NA	NA	NA	NA	NA	1300	NA	NA
	06/15/11	CATIONS	NA	NA	NA	NA	NA	NA	NA	NA	NA	1200	NA	NA
	02/16/11	CATIONS	NA	NA	NA	NA	NA	NA	NA	NA	NA	1200	NA	NA
	10/04/10	CATIONS	NA	NA	NA	NA	NA	NA	NA	NA	NA	1300	NA	NA
	09/16/10	CATIONS	NA	NA	NA	NA	NA	NA	NA	NA	NA	NA	NA	NA

DEFINITIONS

NA = Not analyzed; NE = Not established

Bold and highlighted values represent values above the applicable standards

STANDARDS

WQCC 20 NMAC 6.2.3103 - Standards for Ground Water of 10,000 mg/l TDS Concentration or Less.

a) Human Health Standards; b) Other Standards for Domestic Water

40 CFR 141.62 Detection Limits for Inorganic Contaminants

NMED Risk Assessment Guidance for Investigations and Remediations Table A-1

EPA Regional Screening Level (RSL) Summary Table

NOTES

Wells marked in red were not sampled because SPH was present in the well or the well was dry

Items notes with a * and italics have a detection limit greater than or equal to the applicable standard.

8.7.4 GWM-1, GWM-2, GWM-3

Volatile and Semi-Volatile Organic Compound Analytical Result Summary

			PARAMETERS																				
			1,2,4-Trimethyl benzene (mg/L)	1,3,5-Trimethyl benzene (mg/L)	Naphthalene (mg/L)	1-Methyl naphthalene (mg/L)	2-Methyl naphthalene (mg/L)	Acetone (mg/L)	Isopropyl benzene (mg/L)	n-Butyl benzene (mg/L)	n-Propyl benzene (mg/L)	1,2-Dichloro ethane (EDC) (mg/L)	2,4-Dimethyl phenol (mg/L)	Benz(a) anthracene (mg/L)	Benzo(a) pyrene (mg/L)	Benzo (g,H,i) perylene (mg/L)	Chrysene (mg/L)	Fluorene (mg/L)	1-Methyl naphthalene (mg/L)	2-Methyl naphthalene (mg/L)	Naphthalene (mg/L)	Phenanthrene (mg/L)	Pyrene (mg/L)
WQCC 20 NMAC 6.2.3103 (DEC 2018)			NE	NE	**0.03**	NE	NE	NE	NE	NE	NE	**0.005**	NE	NE	**0.0002**	NE	NE	NE	NE	NE	**0.03**	NE	NE
40 CFR 141.61 MCL			NE	NE	NE	NE	NE	NE	NE	NE	NE	0.005	NE	NE	0.0002	NE	NE	NE	NE	NE	NE	NE	NE
NMED TAP WATER (JUNE 2019)			NE	NE	0.00165	**0.0114**	**0.035**	**14.06**	**0.447**	NE	NE	0.0017	**0.354**	**0.00012**	0.00025	NE	**0.0343**	**0.288**	**0.0114**	**0.035**	0.00165	**0.17**	**0.117**
EPA RSL for Tap Water (NOVEMBER 2019)			**0.056**	**0.06**	0.00017	0.0011	0.036	14	0.45	**1**	**0.66**	0.013	0.36	0.00003	0.000025	NE	0.025	0.29	0.0011	0.036	0.00017	NE	0.12
WELL ID	**DATE SAMPLED**	**METHOD**																					
GWM-1	2019 - 2016	--	NO SAMPLES COLLECTED - SPH DETECTED																				
	10/29/15	--	NO SAMPLES COLLECTED - SPH DETECTED																				
	08/24/15	8260B/8270C	**0.063**	0.017	**0.045**	**0.067**	**0.087**	<0.05	<0.005	<0.015	<0.005	*<0.005**	<0.250	**1.3**	**0.062**	0.34	**1.8**	**5.4**	**37**	**27**	**2.5**	**25**	**4.8**
	06/02/15	8021B	0.0047	0.0012	NA	NA	NA	NA	NA	NA	NA	NA	NA										
	03/10/15	8021B	0.0028	<0.001	NA	NA	NA	NA	NA	NA	NA	NA	NA										
	11/13/14	8260B	0.0057	<0.005	<0.01	*<0.02**	<0.02	<0.05	<0.005	<0.015	<0.005	**0.027**	NA										
	09/12/14	8260B/8270C	0.0098	0.0012	<0.002	**0.013**	<0.004	<0.01	0.0014	<0.003	0.003	<0.001	0.078										
	06/05/14	8260B	0.011	0.0012	<0.002	**0.012**	<0.004	0.02	0.0017	<0.003	0.0021	NA	NA										
	03/11/14	8260B	**7**	<0.001	<0.002	0.0068	<0.004	<0.01	0.0011	<0.003	0.0016	NA	NA										
	11/11/13	8260B	0.0052	<0.001	<0.002	0.0047	<0.004	<0.01	0.0012	<0.003	0.0018	NA	NA										
	09/03/13	8260B/8270C	0.011	<0.005	<0.01	*<0.02**	<0.02	<0.05	<0.005	<0.015	<0.005	**0.077**	0.077										
	06/12/13	8260B	0.013	0.0027	<0.002	**0.018**	<0.004	0.013	0.0012	<0.003	0.0018	NA	NA										
	03/18/13	8260B	0.019	<0.005	<0.01	*<0.02**	<0.02	<0.05	<0.005	<0.015	<0.005	NA	NA										
	11/28/12	8260B	<0.01	<0.01	<0.02	*<0.04**	*<0.04**	<0.1	<0.01	<0.03	<0.01	NA	NA										
	08/21/12	8260B/8270C	0.0097	0.0019	<0.002	**0.013**	<0.004	<0.01	0.0011	<0.003	0.0022	**0.032**	0.032										
	06/12/12	8260B	0.0049	<0.001	<0.002	0.0063	<0.004	0.011	<0.001	<0.001	0.0016	NA	NA										
	03/20/12	8260B	0.0018	<0.001	<0.002	<0.004	<0.004	0.011	<0.001	<0.001	0.0011	NA	NA										
	12/14/11	8260B	0.004	<0.001	<0.002	0.0052	<0.004	<0.01	0.0013	<0.001	0.0022	NA	NA										
	09/26/11	8260B	0.019	0.0029	0.0044	**0.028**	<0.004	<0.01	0.0019	<0.01	0.0027	NA	NA										
	06/15/11	8260B	0.018	0.0031	0.0055	**0.024**	0.0062	<0.01	0.0018	<0.01	0.0028	NA	NA										
	02/16/11	8260B	0.008	<0.001	<0.002	0.01	<0.004	<0.01	0.0014	<0.001	0.0018	NA	NA										
	11/02/10	8260B	0.0075	<0.001	<0.02	0.011	<0.004	<0.01	<0.001	0.0016	0.0012	NA	NA										
	09/16/10	8260B Short List	0.012	0.0019	NA	NA	NA	NA	NA	NA	NA	NA	NA										
	07/20/10	8260B/8270C	0.013	<0.001	0.0035	0.0072	<0.004	0.012	0.0016	0.0019	0.0015	**0.052**	0.052										
	03/03/10	8260B	0.0081	<0.005	<0.01	*<0.02**	<0.02	<0.05	<0.005	<0.005	<0.005	NA	NA										
GWM-2	2019 - 2014	--	DRY																				
	11/11/13	--	INSUFFICIENT WATER VOLUME TO SAMPLE																				
	9/3/2013	8206B	<0.001	<0.001	<0.002	<0.004	<0.004	<0.01	<0.001	<0.003	<0.001	*<0.01**	<0.01										
	6/12/2013	8260B	<0.001	<0.001	<0.002	<0.004	<0.004	0.011	<0.001	<0.003	<0.001	NA	NA										
	3/18/2013	8260B	<0.001	<0.001	<0.002	<0.004	<0.004	0.011	<0.001	<0.003	<0.001	NA	NA										
	6/15/2011	8260B	<0.001	<0.001	<0.002	<0.004	<0.004	<0.01	<0.001	<0.001	<0.001	NA	NA										
	2/16/2011	8260B	<0.001	<0.001	<0.002	<0.004	<0.004	<0.01	<0.001	<0.001	<0.001	NA	NA										
GWM-3	2019 - 2013	--	DRY																				
	6/15/2011	8260B	<0.001	<0.001	<0.002	<0.004	<0.004	<0.01	<0.001	<0.001	<0.001	NA	NA										
	2/16/2011	8260B	<0.001	<0.001	<0.002	<0.004	<0.004	<0.01	<0.001	<0.001	<0.001	NA	NA										

DEFINITIONS

NA = Not analyzed; NE = Not established

Bold and highlighted values represent values above the applicable standards

STANDARDS

WQCC 20 NMAC 6.2.3103 - Standards for Ground Water of 10,000 mg/l TDS Concentration or Less.

a) Human Health Standards; b) Other Standards for Domestic Water

40 CFR 141.62 Detection Limits for Inorganic Contaminants

NMED Risk Assessment Guidance for Investigations and Remediations Table A-1

EPA Regional Screening Level (RSL) Summary Table

NOTES

Wells marked in red were not sampled because SPH was present in the well or the well was dry

Items notes with a * and italics have a detection limit greater than or equal to the applicable standard.

8.8 NAPIS-1, NAPIS-2, NAPIS-3, KA-3
BTEX and MTBE Analytical Result Summary

STANDARDS			PARAMETERS				
			Benzene (mg/L)	Toluene (mg/L)	Ethylbenzene (mg/L)	Total Xylenes (mg/L)	MTBE (mg/L)
WQCC 20 NMAC 6.2.3103 (DEC 2018)			**0.005**	**1**	**0.7**	**0.62**	**0.1**
40 CFR 141.61 MCL			0.005	1.0	0.7	10	NE
NMED Tap Water (Rev 2. JUN 2019)			0.00455	1.09	0.0149	0.193	0.143
EPA RSL for Tap Water (NOV 2019)			0.0046	1.1	0.0015	0.19	0.14
WELL ID	**DATE SAMPLED**	**METHOD**					
NAPIS-1	2nd half 2018 - 2019	--	*Not sampled due to presence of H_2S*				
	04/25/18	--	SPH Detected - No samples were collected				
	02/12/18	--	SPH Detected - No samples were collected				
	12/04/17	--	SPH Detected - No samples were collected				
	09/05/17	--	SPH Detected - No samples were collected				
	06/02/17	8260B	0.000067	<0.001	<0.001	<0.0015	0.0031
	02/21/17	8260B	<0.001	<0.001	<0.001	<0.0015	0.0013
	11/14/16	8260B	<0.001	<0.001	<0.001	<0.0015	0.00087
	09/01/16	8260B	<0.001	<0.001	<0.001	<0.0015	0.0018
	06/07/16	8260B	<0.001	<0.001	<0.001	<0.0015	0.002
	03/01/16	8260B	<0.001	<0.001	<0.001	**9.2**	0.0003
	10/28/15	8260B	<0.001	<0.001	<0.001	<0.0015	<0.001
	08/11/15	8260B	<0.001	<0.001	<0.001	<0.0015	<0.001
	06/02/15	8021B	<0.001	<0.001	<0.001	<0.002	<0.0025
	03/10/15	8021B	<0.001	<0.001	<0.001	<0.002	<0.0025
	11/11/14	8021B	<0.001	<0.001	<0.001	<0.002	<0.0025
	09/11/14	8260B	0.0014	<0.001	<0.001	<0.0015	<0.001
	06/05/14	8021B	<0.001	<0.001	<0.001	<0.002	<0.0025
	03/10/14	8021B	<0.001	<0.001	<0.001	<0.002	<0.0025
	11/12/13	8021B	<0.001	<0.001	<0.001	<0.002	<0.0025
	09/03/13	8260B	<0.001	<0.001	<0.001	<0.0015	<0.001
	06/12/13	8021B	<0.001	<0.001	<0.001	<0.002	<0.0025
	03/18/13	8021B	<0.001	<0.001	<0.001	<0.002	<0.0025
	11/28/12	8021B	<0.001	<0.001	<0.001	<0.002	<0.0025
	08/21/12	8260B	<0.001	<0.001	<0.001	<0.0015	<0.001
	06/12/12	8021B	<0.001	<0.001	<0.001	<0.002	<0.0025
	03/20/12	8021B	<0.001	<0.001	<0.001	<0.002	<0.0025
	12/14/11	8021B	<0.001	<0.001	<0.001	<0.002	<0.0025
	09/27/11	8021B	<0.001	<0.001	<0.001	<0.002	<0.0025
	06/15/11	8260B	<0.001	<0.001	<0.001	<0.0015	<0.001
	03/02/11	8021B	<0.001	<0.001	<0.001	<0.002	<0.0025
	11/02/10	8260	<0.001	<0.001	<0.001	<0.003	<0.0015
	09/15/10	8021B	<0.001	<0.001	<0.001	<0.002	<0.0025
	06/08/10	8021B	<0.001	<0.001	<0.001	<0.002	<0.0025
	03/08/10	8021B	<0.001	<0.001	<0.001	<0.002	NA

8.8 NAPIS-1, NAPIS-2, NAPIS-3, KA-3
BTEX and MTBE Analytical Result Summary

STANDARDS			PARAMETERS				
			Benzene (mg/L)	Toluene (mg/L)	Ethylbenzene (mg/L)	Total Xylenes (mg/L)	MTBE (mg/L)
WQCC 20 NMAC 6.2.3103 (DEC 2018)			**0.005**	**1**	**0.7**	**0.62**	**0.1**
40 CFR 141.61 MCL			0.005	1.0	0.7	10	NE
NMED Tap Water (Rev 2. JUN 2019)			0.00455	1.09	0.0149	0.193	0.143
EPA RSL for Tap Water (NOV 2019)			0.0046	1.1	0.0015	0.19	0.14
WELL ID	DATE SAMPLED	METHOD					
NAPIS-2	10/21/19	8260B	**0.210**	<0.001	0.024	<0.0015	0.1
	08/22/19	8260B	**0.220**	0.00045	0.044	0.00085	0.11
	05/28/19	8260B	**0.270**	<0.001	0.045	<0.0015	0.098
	04/09/19	260B SHORT LIS	**0.340**	<0.01	0.024	0.001	0.097
	04/30/18	8260B	**0.032**	0.00230	0.035	0.00061	0.099
	02/09/18	8260B	**0.027**	0.00069	0.033	0.0016	**0.13**
	12/04/17	8260B	**0.021**	0.00031	0.038	0.00069	**0.16**
	09/05/17	8260B	**0.030**	0.00030	0.037	0.00078	**0.14**
	06/01/17	8260B	**0.035**	0.00025	0.016	0.00071	**0.14**
	02/21/17	8260B	**0.024**	0.00014	0.0031	0.00053	**0.18**
	11/14/16	8260B	0.0041	0.0001	0.0014	<0.0015	**0.16**
	09/01/16	8260B	0.0050	<0.001	0.0015	<0.0015	**0.18**
	06/07/16	8260B	0.0045	0.0001	0.0051	<0.0015	**0.14**
	03/01/16	8260B	<0.001	<0.001	<0.001	<0.0015	<0.001
	10/28/15	8260B	**0.0091**	<0.001	0.0021	<0.0015	**0.23**
	08/11/15	8260B	**0.012**	<0.001	0.0028	<0.0015	**0.2**
	06/02/15	8021B	**0.016**	<0.001	0.0073	<0.002	**0.2**
	03/10/15	8021B	**0.032**	<0.001	0.0120	0.0027	**0.22**
	11/11/14	8021B	**0.016**	<0.001	0.0052	<0.002	**0.34**
	09/11/14	8260B	**0.027**	<0.001	0.007	<0.0015	**0.29**
	06/05/14	8021B	**0.086**	0.0021	0.028	0.0037	**0.2**
	03/10/14	8021B	**0.067**	<0.002	0.028	<0.004	**0.21**
	11/12/13	8021B	0.001	<0.001	0.0083	<0.002	**0.25**
	09/03/13	8260B	**0.018**	<0.001	0.013	0.0016	**0.24**
	06/12/13	8021B	**0.013**	<0.001	0.047	<0.002	**0.3**
	03/18/13	8021B	**0.07**	<0.001	0.056	0.0022	**0.38**
	11/28/12	8021B	**0.016**	<0.002	0.003	<0.004	**0.36**
	08/21/12	8260B	**0.01**	<0.005	<0.005	<0.0075	**0.16**
	06/12/12	8021B	**0.018**	<0.01	0.012	<0.02	**0.34**
	03/20/12	8021B	**0.019**	<0.01	0.011	<0.02	**0.37**
	12/14/11	8021B	**0.022**	<0.005	0.0089	<0.01	**0.33**
	09/27/11	8021B	**0.035**	<0.005	<0.005	<0.01	**0.33**
	06/15/11	8260B	**0.027**	<0.005	0.018	<0.0075	**0.28**
	03/02/11	8021B	**0.04**	<0.005	0.014	<0.01	**0.34**
	11/02/10	8260	**0.015**	<0.005	<0.005	<0.0015	**0.27**
	09/15/10	8260B	**0.066**	<0.005	0.0083	<0.015	**0.23**
	06/10/10	8021B	**0.14**	<0.005	0.0096	<0.001	**0.23**
	03/08/10	8260B	**0.083**	0.0014	0.016	0.0021	**0.25**

8.8 NAPIS-1, NAPIS-2, NAPIS-3, KA-3
BTEX and MTBE Analytical Result Summary

STANDARDS			PARAMETERS				
			Benzene (mg/L)	Toluene (mg/L)	Ethylbenzene (mg/L)	Total Xylenes (mg/L)	MTBE (mg/L)
WQCC 20 NMAC 6.2.3103 (DEC 2018)			**0.005**	**1**	**0.7**	**0.62**	**0.1**
40 CFR 141.61 MCL			0.005	1.0	0.7	10	NE
NMED Tap Water (Rev 2. JUN 2019)			0.00455	1.09	0.0149	0.193	0.143
EPA RSL for Tap Water (NOV 2019)			0.0046	1.1	0.0015	0.19	0.14
WELL ID	**DATE SAMPLED**	**METHOD**					
NAPIS-3	10/21/19	8260B	<0.001	<0.001	<0.001	<0.0015	0.028
	08/22/19	8260B	0.00054	<0.001	<0.001	<0.0015	0.03
	05/28/19	8260B	<0.001	<0.001	<0.001	<0.0015	0.031
	04/09/19	8260B	<0.001	<0.001	0.00076	<0.0015	0.04
	04/30/18	8260B	**0.29**	0.00660	0.0083	0.013	0.032
	02/09/18	8260B	0.00016	<0.001	0.000098	<0.0015	0.033
	12/04/17	8260B	<0.001	<0.001	<0.001	<0.0015	0.042
	09/05/17	8260B	<0.001	<0.001	<0.001	<0.0015	0.018
	06/02/17	8260B	<0.001	<0.001	<0.001	<0.0015	0.040
	02/21/17	8260B	<0.001	<0.001	<0.001	<0.0015	0.016
	11/14/16	8260B	<0.001	0.00021	<0.001	<0.0015	0.01500
	09/01/16	8260B	<0.001	<0.001	<0.001	<0.0015	0.00084
	06/07/16	8260B	<0.001	<0.001	<0.001	<0.0015	0.00044
	03/01/16	8260B	**0.013**	0.00023	0.0053	<0.0015	**0.16**
	10/28/15	8260B	<0.001	<0.001	<0.001	<0.0015	<0.001
	08/11/15	8260B	<0.001	<0.001	<0.001	<0.0015	<0.001
	06/02/15	8021B	<0.001	<0.001	<0.001	<0.002	<0.0025
	03/10/15	8021B	<0.001	<0.001	<0.001	<0.002	<0.0025
	11/13/14	8260B	<0.001	<0.001	<0.001	<0.0015	<0.001
	09/11/14	8260B	0.0038	<0.001	0.0019	<0.0015	0.011
	06/05/14	8021B	<0.001	<0.001	<0.001	<0.002	<0.0025
	03/10/14	8021B	<0.001	<0.001	<0.001	<0.002	<0.0025
	11/12/13	8021B	<0.001	<0.001	<0.001	<0.002	<0.0025
	09/03/13	8260B	<0.001	<0.001	<0.001	<0.0015	<0.001
	06/12/13	8021B	<0.001	<0.001	<0.001	<0.002	<0.0025
	03/18/13	8021B	<0.002	<0.002	<0.002	<0.004	<0.005
	11/28/12	8021B	<0.002	<0.002	<0.002	<0.004	<0.005
	10/2/2012 [1]	8021B	<0.001	<0.001	<0.001	<0.002	<0.0025
	06/12/12	8021B	<0.001	<0.001	<0.001	<0.002	<0.0025
	03/20/12	8021B	<0.001	<0.001	<0.001	<0.002	<0.0025
	12/14/11	8021B	<0.001	<0.001	<0.001	<0.002	<0.0025
	09/27/11	8021B	<0.001	<0.001	<0.001	<0.002	<0.0025
	06/15/11	8260B	<0.001	<0.001	<0.001	<0.0015	<0.001
	03/02/11	8021B	<0.001	<0.001	<0.001	<0.002	<0.0025
	11/02/10	8260	<0.001	<0.001	<0.001	<0.0015	<0.0015
	09/15/10	8021B	0.001	<0.001	<0.001	<0.002	<0.0025
	06/10/10	8021B	**0.2**	<0.001	0.012	<0.002	0.08
	03/08/10	8021B	**0.072**	<0.001	0.001	<0.002	NA

8.8 NAPIS-1, NAPIS-2, NAPIS-3, KA-3
BTEX and MTBE Analytical Result Summary

STANDARDS			PARAMETERS				
			Benzene (mg/L)	Toluene (mg/L)	Ethylbenzene (mg/L)	Total Xylenes (mg/L)	MTBE (mg/L)
WQCC 20 NMAC 6.2.3103 (DEC 2018)			**0.005**	**1**	**0.7**	**0.62**	**0.1**
40 CFR 141.61 MCL			0.005	1.0	0.7	10	NE
NMED Tap Water (Rev 2. JUN 2019)			0.00455	1.09	0.0149	0.193	0.143
EPA RSL for Tap Water (NOV 2019)			0.0046	1.1	0.0015	0.19	0.14
WELL ID	**DATE SAMPLED**	**METHOD**					
KA-3	10/21/19	8260B	**0.057**	<0.004	0.0062	<0.0015	0.056
	08/22/19	8260B	**0.38**	<0.001	0.048	0.00062	0.068
	05/28/19	8260B	**0.2**	<0.001	0.015	0.00057	0.061
	04/09/19	260B SHORT LIS	**0.21**	<0.001	0.028	0.0012	0.061
	04/30/18	8260B	**0.5900**	0.51	0.054	0.058	0.032
	02/09/18	8260B	0.0033	<0.001	0.002	<0.0015	0.029
	12/04/17	8260B	0.0042	<0.001	0.002	<0.0015	0.040
	09/05/17	8260B	0.0025	<0.001	0.0011	<0.0015	0.041
	06/01/17	8260B	0.00048	<0.001	0.00027	<0.0015	0.046
	02/21/17	8260B	**0.017**	<0.001	0.0077	<0.0015	0.046
	11/14/16	8260B	0.0044	<0.001	0.0013	<0.0015	0.037
	09/01/16	8260B	**0.0071**	<0.001	0.0032	<0.0015	0.045
	06/07/16	8260B	**0.0060**	<0.001	0.0015	<0.0015	0.037
	03/03/16	8260B	**0.0054**	<0.001	0.0027	<0.0015	0.015
	10/28/15	8260B	<0.001	<0.001	<0.001	<0.0015	0.011
	08/11/15	8260B	<0.001	<0.001	<0.001	<0.0015	0.011
	06/02/15	8021B	<0.001	<0.001	<0.001	<0.002	0.012
	03/10/15	8021B	<0.001	<0.001	<0.001	<0.002	0.0088
	11/11/14	8021B	<0.001	<0.001	<0.001	<0.002	0.0130
	09/11/14	8260B	<0.001	<0.001	<0.001	<0.0015	<0.001
	06/05/14	8021B	<0.001	<0.001	<0.001	<0.002	0.0056
	03/10/14	8021B	<0.001	<0.001	<0.001	<0.002	0.0039
	11/12/13	8021B	0.0024	<0.001	0.0018	<0.002	0.0065
	09/03/13	8260B	0.0034	<0.001	0.0014	<0.0015	**0.2000**
	06/12/13	8021B	**0.009**	<0.001	0.0083	<0.002	0.031
	03/18/13	8021B	**0.011**	<0.001	0.0110	<0.002	0.017
	11/28/12	8021B	<0.002	<0.002	<0.002	<0.004	<0.005
	08/21/12	8260B	<0.001	<0.001	<0.001	<0.0015	0.023
	06/12/12	8021B	**0.013**	<0.001	0.0045	<0.002	0.028
	03/20/12	8021B	**0.015**	<0.002	0.0042	<0.004	0.035
	12/14/11	8021B	**0.024**	<0.001	0.0045	<0.002	0.057
	09/27/11	8021B	**0.064**	<0.001	0.011	<0.002	0.099
	06/15/11	8260B	<0.001	<0.001	<0.001	<0.0015	0.077
	03/02/11	8021B	*<0.005**	<0.005	<0.005	<0.01	0.088
	11/02/10	8260	**0.23**	<0.01	0.014	<0.03	0.1
	09/15/10	8260B	**0.52**	<0.01	0.031	<0.03	**0.11**
	06/10/10	8021B	<0.001	<0.001	<0.001	<0.002	<0.0025
	03/08/10	8021B	*<0.01**	<0.01	<0.01	<0.01	NA

DEFINITIONS

NA = Not analyzed; NE = Not established

Bold and highlighted values represent values above the applicable standards

STANDARDS

WQCC 20 NMAC 6.2.3103 - Standards for Ground Water of 10,000 mg/l TDS Concentration or Less.

a) Human Health Standards; b) Other Standards for Domestic Water

40 CFR 141.61 Maximum Contaminant Levels for Organic Contaminants

NMED Risk Assessment Guidance for Investigations and Remediations Table A-1

EPA Regional Screening Level (RSL) Summary Table

NOTES

Wells marked in red were not sampled because SPH was present in the well or H2S was detected in area

Items notes with a * and italics have a detection limit greater than or equal to the applicable standard.

1) Was not sampled in September due to low recharge rate.

8.8.1 NAPIS-1, NAPIS-2, NAPIS-3, KA-3
General Chemistry and DRO/GRO/MRO Analytical Result Summary

			PARAMETERS								
STANDARDS			Fluoride (mg/L)	Chloride (mg/L)	Nitrite (mg/L)	Nitrate (mg/L)	Phosphorus (mg/L)	Sulfate (mg/L)	DRO (mg/L)	GRO (mg/L)	MRO (mg/L)
WQCC 20 NMAC 6.2.3103 (DEC 2018)			**1.6**	**250.0**	**1**	**10**	NE	**600.0**	NE	NE	NE
40 CFR 141.62 MCL			4.0	NE	1.0	10	NE	NE	NE	NE	NE
NMED Tap Water (Rev 2. JUN 2019)			1.18	NE	1.97	31.60	NE	NE	NE	NE	NE
EPA RSL for Tap Water (NOV 2019)			0.8	NE	2	32	NE	NE	NE	NE	NE
NMED SSG (MAR 2019)			NE	NE	NE	NE	NE	NE	**0.0167**	**0.0101**	**0.0858**
WELL ID	DATE SAMPLED	METHOD									
NAPIS-1	2nd half 2018 - 2019	--	*Not sampled due to presence of H_2S*								
	04/25/18	--	SPH Detected - No samples were collected								
	02/12/18	--	SPH Detected - No samples were collected								
	12/04/17	--	SPH Detected - No samples were collected								
	09/05/17	--	SPH Detected - No samples were collected								
	06/02/17	300.0/8015D	0.25	130	16	16	<0.5	110	*<1.0**	*<0.05**	*<5.0**
	02/21/17	300.0/8015D	0.32	110	**27**	**27**	<0.5	110	*<1.0**	*<0.05**	*<5.0**
	11/14/16	300.0/8015D	0.56	110	**12**	**12**	<0.5	99	*<1.0**	*<0.05**	*<5.0**
	09/01/16	300.0/8015D	0.27	0.97	<0.1	10	<0.5	99	*<1.0**	*<0.05**	*<5.0**
	06/07/16	300.0/8015D	0.44	130	**21**	**21**	<0.5	140	*<1.0**	*<0.05**	*<5.0**
	03/01/16	300.0/8015D	0.38	110	**14**	**14**	<2.5	110	*<1.0**	*<0.05**	*<5.0**
	10/28/15	300.0/8015D	0.52	85	**6.9**	6.9	<0.5	85	*<1.0**	*<0.05**	*<5.0**
	08/11/15	300.0/8015D	0.67	110	**8.6**	8.6	<0.5	100	*<1.0**	*<0.05**	*<5.0**
	06/02/15	300.0/8015D	<1.0	100	**9.1**	9.1	<5.0	93	*<1.0**	NA	*<5.0**
	03/10/15	300.0/8015D	0.35	82	**5.6**	5.6	<0.5	75	*<1.0**	*<0.05**	*<5.0**
	11/11/14	300.0/8015B	0.69	**1100**	**5.1**	5.1	<0.5	130	*<1.0**	*<0.05**	NA
	09/11/14	300.0/8015B	0.46	91	**7.1**	7.1	<0.5	110	*<1.0**	*<0.05**	*<5.0**
	06/05/14	300.0/8015B	0.4	86	**14**	**14**	<0.5	140	*<1.0**	*<0.05**	*<5.0**
	03/10/14	300.0/8015B	<0.5	79	<0.5	**29**	<2.5	180	*<1.0**	*<0.05**	*<5.0**
	11/12/13	300.0/8015B	0.42	120	<0.1	**30**	<0.5	210	*<1.0**	*<0.05**	NA
	09/03/13	300.0/8015B	0.53	110	**34**	**34**	<0.5	69	*<1.0**	*<0.05**	*<5.0**
	06/12/13	300.0/8015B	<1.0	89	**3.3**	3.3	<5.0	35	*<1.0**	*<0.05**	*<5.0**
	03/18/13	300.0/8015B	0.63	97	**1.1**	1.1	<2.5	39	*<1.0**	*<0.05**	*<5.0**
	11/28/12	300.0/8015B	1.1	110	<0.5	1.4	<2.5	70	*<1.0**	*<0.05**	*<5.0**
	08/21/12	300.0/8015B	0.54	96	<0.5	2.6	<2.5	52	*<1.0**	*<0.05**	*<5.0**
	06/12/12	300.0/8015B	0.88	120	<0.5	2.9	<2.5	68	*<1.0**	*<0.05**	*<5.0**
	03/20/12	300.0/8015B	0.49	100	<0.1	3.3	<0.5	56	*<1.0**	*<0.05**	*<5.0**
	12/14/11	300.0/8015B	0.67	150	**4.7**	4.7	<10	82	*<1.0**	*<0.05**	*<5.0**
	09/27/11	300.0/8015B	1.1	180	**58**	**58**	<2.5	110	*<1.0**	*<0.05**	*<5.0**
	06/15/11	300.0/8015B	0.52	140	<0.1	6.2	<0.5	78	*<1.0**	**0.11**	*<5.0**
	03/02/11	300.0/8015B	0.42	180	**9.5**	9.5	<0.5	92	*<1.0**	*<0.05**	*<5.0**
	11/02/10	300.0/8015B	0.96	200	*<2.0**	6.9	<0.5	98	*<1.0**	*<0.05**	
	09/15/10	300.0/8015B	0.5	189	**11.2**	**11.2**	0.019	65	*<1.0**	*<0.05**	
	06/08/10	300.0/8015B	0.73	170	**4.0**	4.0	<0.5	56	*<1.0**	*<0.05**	
	03/08/10	300.0/8015B	0.75	130	**2.0**	2.0	<0.5	52	*<1.0**	*<0.05**	

8.8.1 NAPIS-1, NAPIS-2, NAPIS-3, KA-3
General Chemistry and DRO/GRO/MRO Analytical Result Summary

			PARAMETERS								
STANDARDS			Fluoride (mg/L)	Chloride (mg/L)	Nitrite (mg/L)	Nitrate (mg/L)	Phosphorus (mg/L)	Sulfate (mg/L)	DRO (mg/L)	GRO (mg/L)	MRO (mg/L)
WQCC 20 NMAC 6.2.3103 (DEC 2018)			**1.6**	**250.0**	**1**	**10**	NE	**600.0**	NE	NE	NE
40 CFR 141.62 MCL			4.0	NE	1.0	10	NE	NE	NE	NE	NE
NMED Tap Water (Rev 2. JUN 2019)			1.18	NE	1.97	31.60	NE	NE	NE	NE	NE
EPA RSL for Tap Water (NOV 2019)			0.8	NE	2	32	NE	NE	NE	NE	NE
NMED SSG (MAR 2019)			NE	NE	NE	NE	NE	NE	**0.0167**	**0.0101**	**0.0858**
WELL ID	DATE SAMPLED	METHOD									
NAPIS-2	10/21/19	300.0/8015D	**2.2**	180	<0.5	<0.5	<2.5	1.4	**0.2**	**0.99**	*<2.5**
	08/22/19	300.0/8015D	**2.1**	180	<0.5	<0.5	<2.5	0.97	**2.0**	**1**	*<5.0**
	05/28/19	300.0/8015D	**2.2**	150	<0.5	<0.5	<2.5	2	**1.9**	**0.96**	*<5.0**
	04/09/19	300.0/8015D	**2.1**	140	<.5	<0.5	<2.5	4	**1.5**	**1.3**	*<5.0**
	04/30/18	300.0/8015D	1.6	220	*<1.0**	<1.0	<2.5	3.6	**1.9**	**0.59**	*<5.0**
	02/09/18	300.0/8015D	1.5	250	*<1.0**	<1.0	1.8	6	**1.3**	**0.81**	*<5.0**
	12/04/17	300.0/8015D	1.5	**270**	*<1.0**	<1.0	<2.5	6.1	**2.1**	**0.88**	*<5.0**
	09/05/17	300.0/8015D	1.5	**280**	*<1.0**	<1.0	<2.5	6.5	**1.7**	**0.63**	*<5.0**
	06/01/17	300.0/8015D	1.5	**260**	*<1.0**	<1.0	<0.5	6.5	**1.2**	**0.53**	*<5.0**
	02/21/17	300.0/8015D	**1.8**	250	*<1.0**	<1.0	<0.5	8.7	**2.4**	**0.6**	*<5.0**
	11/14/16	300.0/8015D	**1.7**	**310**	*<1.0**	<1.0	<0.5	11	**1.0**	**0.56**	*<5.0**
	09/01/16	300.0/8015D	**1.7**	**300**	<0.5	<0.5	<2.5	7.8	**1.1**	**0.75**	*<5.0**
	06/07/16	300.0/8015D	**1.7**	**340**	*<1.0**	<1.0	<0.5	19	*<1.0**	**0.44**	*<5.0**
	03/01/16	300.0/8015D	1.6	**330**	*<1.0**	<1.0	<2.5	18	*<1.0**	**0.38**	*<5.0**
	10/28/15	300.0/8015B	**1.7**	**320**	*<1.0**	<1.0	<0.5	13	**1.1**	**0.37**	*<5.0**
	08/11/15	300.0/8015D	1.6	**310**	*<1.0**	<1.0	<0.5	11	*<1.0**	**0.51**	*<5.0**
	06/02/15	300.0/8015D	**2.1**	**290**	*<2.0**	<2.0	<5.0	9.9	*<1.0**	NA	*<5.0**
	03/10/15	300.0/8015B	1.4	**300**	<0.5	<0.5	<2.5	7.8	**1.2**	**0.49**	*<5.0**
	11/11/14	300.0/8015B	1.6	**330**	*<1.0**	<1.0	<2.5	11.0	*<1.0**	**0.6**	*<5.0**
	09/11/14	300.0/8015B	1.6	**360**	*<1.0**	<1.0	<0.5	11.0	**1.3**	**0.41**	*<5.0**
	06/05/14	300.0/8015B	1.3	**330**	*<1.0**	<1.0	<0.5	4.8	**1.5**	**0.62**	*<5.0**
	03/10/14	300.0/8015B	1.5	220	*<1.0**	<1.0	<5.0	10.0	**1.8**	**0.64**	*<5.0**
	11/12/13	300.0/8015B	**1.7**	**260**	<0.1	<0.1	<0.5	23	**1.4**	**0.41**	NA
	09/03/13	300.0/8015B	**1.8**	**290**	**5.2**	5.2	<0.5	7.8	*<1.0**	**0.47**	*<5.0**
NAPIS-2 (continued)	06/12/13	300.0/8015B	1.6	230	*<1.0**	<1.0	<5.0	7.8	**1.9**	**0.74**	*<5.0**
	03/18/13	300.0/8015B	1.6	**270**	*<1.0**	<1.0	<2.5	4.9	**2.9**	**0.65**	*<5.0**
	11/28/12	300.0/8015B	**1.7**	**370**	<0.5	<0.5	<2.5	11	*<1.0**	**0.52**	*<5.0**
	08/21/12	300.0/8015B	1.6	**370**	<0.5	<0.5	<2.5	11	*<1.0**	**1.4**	*<5.0**
	06/12/12	300.0/8015B	**1.7**	**350**	<0.5	<0.5	<2.5	7.9	*<1.0**	**1.3**	*<5.0**
	03/20/12	300.0/8015B	0.49	**330**	*<1.0**	<1.0	<0.5	5.3	**4.7**	**1.4**	*<5.0**
	1/30/2012 [2]	300.0/8015B	1.1	**420**	*<1.0**	<1.0	<2.5	<2.5	NA	NA	NA
	12/14/2011 [1]	300.0/8015B	NA	NA	NA	NA	NA	NA	**3.4**	**0.61**	*<5.0**
	09/27/11	300.0/8015B	**1.8**	**270**	**80**	**80**	<2.5	6.0	**3.1**	**0.69**	*<5.0**
	06/15/11	300.0/8015B	1.4	**380**	<0.5	<2.0	<2.5	3.3	**1.8**	**0.97**	*<5.0**
	03/02/11	300.0/8015B	1.3	**360**	*<1.0**	<1.0	<2.5	3.7	**2.8**	**1.3**	*<5.0**
	11/02/10	300.0/8015B	**1.7**	230	*<1.0**	<1.0	<0.5	7.8	**5.1**	**0.57**	
	09/15/10	300.0/8015B	1.3	220	<0.5	<0.5	0.01	6.0	**5.3**	**1.0**	
	06/10/10	300.0/8015B	1.2	**340**	*<1.0**	<1.0	<2.5	8.7	**6.3**	**1.3**	
	03/08/10	300.0/8015B	1.4	**320**	*<1.0**	<1.0	<0.05	11	**3.8**	**1.0**	

8.8.1 NAPIS-1, NAPIS-2, NAPIS-3, KA-3
General Chemistry and DRO/GRO/MRO Analytical Result Summary

			PARAMETERS								
STANDARDS			Fluoride (mg/L)	Chloride (mg/L)	Nitrite (mg/L)	Nitrate (mg/L)	Phosphorus (mg/L)	Sulfate (mg/L)	DRO (mg/L)	GRO (mg/L)	MRO (mg/L)
WQCC 20 NMAC 6.2.3103 (DEC 2018)			**1.6**	**250.0**	**1**	**10**	NE	**600.0**	NE	NE	NE
40 CFR 141.62 MCL			4.0	NE	1.0	10	NE	NE	NE	NE	NE
NMED Tap Water (Rev 2. JUN 2019)			1.18	NE	1.97	31.60	NE	NE	NE	NE	NE
EPA RSL for Tap Water (NOV 2019)			0.8	NE	2	32	NE	NE	NE	NE	NE
NMED SSG (MAR 2019)			NE	NE	NE	NE	NE	NE	**0.0167**	**0.0101**	**0.0858**
WELL ID	DATE SAMPLED	METHOD									
NAPIS-3	10/21/19	300.0/8015D	0.67	**440**	<0.5	4.9	<2.5	200	*<0.4**	*<0.05**	*<2.5**
	08/22/19	300.0/8015D	0.63	**420**	0.17	0.63	<2.5	170	*<1.0**	**0.026**	*<5.0**
	05/28/19	300.0/8015DS	0.69	**420**	<0.5	<2.5	<2.5	170	*<1.0**	**0.022**	*<5.0**
	04/09/19	300.0/8015D	0.65	**390**	<0.5	5.8	<2.5	170	*<1.0**	**0.067**	*<5.0**
	04/30/18	300.0/8015D	0.62	190	*<1.0**	<1.0	<2.5	47	*<1.0**	**0.8**	*<5.0**
	02/09/18	300.0/8015D	0.68	220	**0.31**	0.31	2.1	61	*<1.0**	**0.088**	*<5.0**
	12/04/17	300.0/8015D	0.62	**260**	**1.2**	1.2	<2.5	89	*<1.0**	**0.09**	*<5.0**
	09/05/17	300.0/8015D	NA	NA	NA	NA	NA	NA	*<1.0**	**0.055**	*<5.0**
	06/02/17	300.0/8015D	0.72	240	0.56	0.56	<0.5	88	*<1.0**	**0.063**	*<5.0**
	02/21/17	300.0/8015D	1.3	**350**	**1.9**	1.9	<0.5	150	**1.5**	*<0.05**	*<5.0**
	11/14/16	300.0/8015D	**1.7**	**320**	<0.5	3.5	0.9	230	**0.89**	*<0.05**	*<5.0**
	09/01/16	300.0/8015D	**2.1**	**310**	<0.5	5.0	1.1	210	*<1.0**	*<0.05**	*<5.0**
	06/07/16	300.0/8015D	0.56	**870**	**14**	**14**	<0.5	320	*<1.0**	*<0.05**	*<5.0**
	03/01/16	300.0/8015D	0.53	**850**	**14**	**14**	<0.5	350	*<1.0**	*<0.05**	*<5.0**
	10/28/15	300.0/8015B	0.6	**880**	**15**	**15**	<0.5	420	*<1.0**	*<0.05**	*<5.0**
	08/11/15	300.0/8015D	0.28	**920**	**24**	**24**	<0.5	380	*<1.0**	*<0.05**	*<5.0**
	06/02/15	300.0/8015D	<1.0	**790**	**15**	**15**	<5.0	440	*<1.0**	NA	*<5.0**
	03/10/15	300.0/8015B	0.42	**940**	*<2.0**	**20**	<0.5	430	*<1.0**	*<0.05**	*<5.0**
	11/13/14	300.0/8015B	0.35	**890**	**19**	**19**	<0.5	400	*<1.0**	*<0.05**	*<5.0**
	09/11/14	300.0/8015B	1.1	160	**1.1**	1.1	<0.5	61	*<1.0**	*<0.05**	*<5.0**
	06/05/14	300.0/8015B	0.3	**910**	**19**	**19**	<0.5	400	*<1.0**	*<0.05**	*<5.0**
	03/10/14	300.0/8015B	<0.5	**920**	<0.5	**20**	<2.5	430	*<1.0**	*<0.05**	*<5.0**
	11/12/13	300.0/8015B	0.36	**990**	*<2.0**	**20**	<2.5	380	*<1.0**	*<0.05**	NA
	09/03/13	300.0/8015B	0.27	**980**	**20**	**20**	<0.5	410	*<1.0**	*<0.05**	*<5.0**
	06/12/13	300.0/8015B	<1.0	**940**	**17**	**17**	<5.0	400	*<1.0**	*<0.05**	*<5.0**
	03/18/13	300.0/8015B	1.3	**940**	**17**	**17**	<2.5	380	*<1.0**	*<0.1**	*<5.0**
	11/28/12	300.0/8015B	0.68	**880**	<0.5	**14**	<2.5	280	*<1.0**	*<0.1**	*<5.0**
	10/02/12	300.0/8015B	0.84	**990**	**20**	**20**	<2.5	400	*<1.0**	*<0.05**	*<5.0**
	06/12/12	300.0/8015B	0.55	**1000**	<0.5	**19**	<2.5	450	*<1.0**	*<0.05**	*<5.0**
	03/20/12	300.0/8015B	0.59	**970**	<0.5	**19**	<2.5	390	*<1.0**	*<0.05**	*<5.0**
	12/14/11	300.0/8015B	0.29	**1100**	**19**	**19**	<10	420	*<1.0**	*<0.05**	*<5.0**
	09/27/11	300.0/8015B	<0.5	**1000**	**49**	**49**	<2.5	400	*<1.0**	*<0.05**	*<5.0**
	06/15/11	300.0/8015B	1.5	**530**	<0.5	3.5	<2.5	170	*<1.0**	*<0.05**	*<5.0**
	03/02/11	300.0/8015B	0.44	**1100**	**14**	**14**	<0.05	420	*<1.0**	*<0.05**	*<5.0**
	11/02/10	300.0/8015B	0.48	**1100**	**18**	**18**	<0.5	430	*<1.0**	*<0.05**	
	09/15/10	300.0/8015B	NL	**1040**	**24.1**	**24.1**	0.023	290	*<1.0**	*<0.05**	
	06/10/10	300.0/8015B	1.5	**260**	*<1.0**	<1.0	<0.5	39	**1.8**	**0.89**	
	03/08/10	300.0/8015B	0.46	**410**	**5.5**	5.5	<0.5	400	*<1.0**	*<0.5**	

8.8.1 NAPIS-1, NAPIS-2, NAPIS-3, KA-3
General Chemistry and DRO/GRO/MRO Analytical Result Summary

			PARAMETERS								
STANDARDS			Fluoride (mg/L)	Chloride (mg/L)	Nitrite (mg/L)	Nitrate (mg/L)	Phosphorus (mg/L)	Sulfate (mg/L)	DRO (mg/L)	GRO (mg/L)	MRO (mg/L)
WQCC 20 NMAC 6.2.3103 (DEC 2018)			**1.6**	**250.0**	**1**	**10**	NE	**600.0**	NE	NE	NE
40 CFR 141.62 MCL			4.0	NE	1.0	10	NE	NE	NE	NE	NE
NMED Tap Water (Rev 2. JUN 2019)			1.18	NE	1.97	31.60	NE	NE	NE	NE	NE
EPA RSL for Tap Water (NOV 2019)			0.8	NE	2	32	NE	NE	NE	NE	NE
NMED SSG (MAR 2019)			NE	NE	NE	NE	NE	NE	**0.0167**	**0.0101**	**0.0858**
WELL ID	DATE SAMPLED	METHOD									
KA-3	10/21/19	300.0/8015D	0.969	240	<0.5	<0.5	<2.5	12	*<0.4**	**0.2**	*<2.5**
	08/22/19	300.0/8015D	0.98	240	<0.5	<0.5	<2.5	9	**1.2**	**0.99**	*<5.0**
	05/28/19	300.0/8015D	1	230	<0.5	<0.5	<2.5	9	**1.2**	**0.99**	*<5.0**
	04/09/19	300.0/8015D	0.88	210	<0.5	<0.5	<2.5	15	**0.53**	**0.65**	*<5.0**
	04/30/18	300.0/8015D	0.79	170	*<1.0**	<1.0	<2.5	18	**0.65**	**2.9**	*<5.0**
	02/09/18	300.0/80158D	0.8	190	*<1.0**	<1.0	2.1	30	*<1.0**	**0.12**	*<5.0**
	12/04/17	300.0/8015D	0.84	200	*<1.0**	<1.0	<2.5	27	**0.66**	**0.15**	*<5.0**
	09/05/17	300.0/8015D	NA	NA	NA	NA	NA	NA	*<1.0**	**0.12**	*<5.0**
	06/01/17	300.0/8015D	0.66	220	0.34	0.34	<0.5	41	*<1.0**	**0.068**	*<5.0**
	02/21/17	300.0/8015D	1.0	160	*<1.0**	<1.0	<0.5	26	*<1.0**	**0.20**	*<5.0**
	11/14/16	300.0/8015D	0.93	190	*<1.0**	<1.0	<0.5	35	*<1.0**	**0.13**	*<5.0**
	09/01/16	300.0/8015D	0.86	210	<0.1	<0.5	<0.5	36	*<1.0**	**0.18**	*<5.0**
	06/07/16	300.0/8015D	1	190	*<1.0**	<1.0	<0.5	25	*<1.0**	**0.11**	*<5.0**
	03/03/16	300.0/8015D	0.96	110	<0.1	0.71	<0.5	34	*<1.0**	**0.063**	*<5.0**
	10/28/15	300.0/8015B	1.1	120	*<1.0**	<1.0	<0.5	57	*<1.0**	*<0.05**	*<5.0**
	08/11/15	300.0/8015D	1	130	**2.8**	2.8	<0.5	52	*<1.0**	*<0.05**	*<5.0**
	06/02/15	300.0/8015D	1.5	150	*<2.0**	<2.0	<5.0	42	*<1.0**	NA	*<5.0**
	03/10/15	300.0/8015D	1.1	120	<0.1	0.53	<0.5	43	*<1.0**	*<0.05**	*<5.0**
	11/11/14	300.0/8015B	1.1	160	*<1.0**	<1.0	<0.5	54	*<1.0**	*<0.05**	NL
	09/11/14	300.0/8015B	0.45	**760**	**19**	**19**	<0.5	420	*<1.0**	*<0.05**	*<5.0**
	06/05/14	300.0/8015B	1.0	180	**7.7**	7.7	<0.5	95	*<1.0**	*<0.05**	*<5.0**
	03/10/14	300.0/8015B	1.1	140	<0.5	**13**	<2.5	72	*<1.0**	*<0.05**	*<5.0**
	11/12/13	300.0/8015B	1.3	110	0.2	9.3	<0.5	54	*<1.0**	*<0.05**	NA
	09/03/13	300.0/8015B	1.1	170	**20**	**20**	<0.5	39	*<1.0**	*<0.05**	*<5.0**
	06/12/13	300.0/8015B	1.4	190	*<1.0**	<1.0	<5.0	33	*<1.0**	**0.072**	*<5.0**
	03/18/13	300.0/8015B	**1.8**	180	**2.4**	2.4	<2.5	81	*<1.0**	**0.063**	*<5.0**
	11/28/12	300.0/8015B	0.98	**870**	**2.8**	9.9	<2.5	270	*<1.0**	*<0.1**	*<5.0**
	08/21/12	300.0/8015B	*<2.0**	250	<0.1	0.31	<0.5	43	*<1.0**	**0.1**	*<5.0**
	06/12/12	300.0/8015B	1.3	**710**	**2.1**	**11**	<2.5	220	*<1.0**	**0.14**	*<5.0**
	03/20/12	300.0/8015B	**2.0**	**440**	*<1.0**	**15**	<2.5	220	**1.8**	**0.16**	*<5.0**
	12/14/11	300.0/8015B	1.3	**260**	*<1.0**	<1.0	<0.5	38	*<1.0**	**0.15**	
	09/27/11	300.0/8015B	1.5	**290**	**48**	**48**	<2.5	48	**2.1**	**0.35**	
	06/15/11	300.0/8015B	0.51	**970**	<0.5	**18**	<0.5	370	*<1.0**	*<0.25**	
	03/02/11	300.0/8015B	1.2	**600**	**4.3**	4.3	<0.5	150	*<1.0**	*<0.25**	
	11/02/10	300.0/8015B	**1.7**	**260**	*<1.0**	<1.0	<5.0	38	**1.7**	**0.68**	
	09/15/10	300.0/8015B	1.4	**277**	<0.5	<0.5	0.013	37	**3.0**	**1.9**	
	06/10/10	300.0/8015B	0.38	**1100**	**17**	**17**	<0.05	390	*<1.0**	*<0.05**	
	03/08/10	300.0/8015B	1.6	**410**	**5.5**	5.5	<0.05	90	*<1.0**	**0.47**	

8.8.1 NAPIS-1, NAPIS-2, NAPIS-3, KA-3
General Chemistry and DRO/GRO/MRO Analytical Result Summary

			PARAMETERS								
STANDARDS			Fluoride (mg/L)	Chloride (mg/L)	Nitrite (mg/L)	Nitrate (mg/L)	Phosphorus (mg/L)	Sulfate (mg/L)	DRO (mg/L)	GRO (mg/L)	MRO (mg/L)
WQCC 20 NMAC 6.2.3103 (DEC 2018)			**1.6**	**250.0**	**1**	**10**	NE	**600.0**	NE	NE	NE
40 CFR 141.62 MCL			4.0	NE	1.0	10	NE	NE	NE	NE	NE
NMED Tap Water (Rev 2. JUN 2019)			1.18	NE	1.97	31.60	NE	NE	NE	NE	NE
EPA RSL for Tap Water (NOV 2019)			0.8	NE	2	32	NE	NE	NE	NE	NE
NMED SSG (MAR 2019)			NE	NE	NE	NE	NE	NE	**0.0167**	**0.0101**	**0.0858**
WELL ID	DATE SAMPLED	METHOD									

DEFINITIONS
NA = Not analyzed; NE = Not established
BOLD values represent values above the applicable standard
STANDARDS
WQCC 20 NMAC 6.2.3103 - Standards for Ground Water of 10,000 mg/l TDS Concentration or Less.
a) Human Health Standards; b) Other Standards for Domestic Water
40 CFR 141.62 Maximum Contaminant Levels for Inorganic Contaminants
NMED Risk Assessment Guidance for Investigations and Remediations Table A-1
EPA Regional Screening Level (RSL) Summary Table
NMED Soil Screening Guidance Volume 1, Table 6-4 (groundwater)
NOTES
Wells marked in red were not sampled because SPH was present in the well or H2S was detected in area
Items notes with a * and italics have a detection limit greater than or equal to the applicable standard.
1) 12/14/11 - General Chemistry parameters missed this quarter. Notified NMED and instructed to re-sample for general chemistry parameters only.
2) Resampled for General Chemistry parameters only.

8.8.2 NAPIS-1, NAPIS-2, NAPIS-3, KA-3
Total Metals Analytical Result Summary

STANDARDS			PARAMETERS										
			Arsenic (mg/L)	Barium (mg/L)	Chromium (mg/L)	Copper (mg/L)	Iron (mg/L)	Lead (mg/L)	Manganese (mg/L)	Selenium (mg/L)	Mercury (ug/L)	Uranium (mg/L)	Zinc (mg/L)
WQCC 20 NMAC 6.2.3103 (DEC 2018)			**0.01**	**2**	**0.05**	**1.0**	**1.0**	**0.015**	**0.2**	**0.05**	**2**	**0.03**	**10**
40 CFR 141.62 MCL			0.01	2.0	0.1	1.3	NE	0.015	NE	0.05	2	0.03	NE
NMED Tap Water (Rev 2. JUN 2019)			0.000855	3.28	0.0057	0.7898	13.8	NE	2.02	0.0987	0.626	0.0592	5.96
EPA RSL for Tap Water (NOV 2019)			0.000052	3.8	22	0.8	14	0.015	0.43	0.1	0.63	0.004	6
WELL ID	**DATE SAMPLED**	**METHOD**											
NAPIS-1	2nd half 2018 - 2019	--	*Not sampled due to presence of H_2S.*										
	04/25/18	--	SPH Detected - No samples were collected.										
	02/12/18	--	SPH Detected - No samples were collected.										
	12/04/17	--	SPH Detected - No samples were collected.										
	09/05/17	--	SPH Detected - No samples were collected.										
	06/01/17	200.7/200.8	0.0018	0.1500	<0.006	<0.006	<0.020	0.0005	**0.140**	0.0045	<0.2	**0.015**	0.0190
	02/21/17	200.7/200.8	0.0042	0.1300	<0.006	<0.006	0.140	0.0003	**0.260**	0.0085	<0.2	**NA**	0.0180
	11/14/16	200.7/200.8	0.0036	0.1300	<0.006	<0.006	0.550	0.0008	**0.250**	0.0072	0.085	**0.034**	0.0053
	09/01/16	200.7/200.8	0.0041	0.1400	<0.006	<0.006	0.290	0.0005	**0.250**	<0.02	NA	**0.019**	0.0028
	06/07/16	200.7/200.8	<0.01*	0.1600	<0.006	<0.006	0.820	0.0010	**0.260**	0.0078	0.065	**0.015**	0.0048
	10/28/15	200.7/200.8	<0.005	0.1400	<0.006	<0.006	0.590	0.0008	**0.130**	0.0054	<0.2	**0.013**	<0.01
	08/11/15	200.7/200.8	*<0.01**	0.1100	<0.006	<0.006	0.720	0.0011	0.099	<0.01	<0.2	0.025	0.0100
	06/02/15	200.7/200.8	*<0.01**	0.1500	<0.006	<0.006	0.600	<0.005	**0.250**	<0.01	<0.2	0.014	<0.01
	03/10/15	200.7/200.8	*<0.01**	0.1300	<0.006	<0.006	0.460	<0.001	0.200	<0.01	<0.2	0.013	<0.01
	11/11/14	200.7/200.8	*<0.01**	0.1300	<0.006	<0.006	0.790	0.0010	**0.240**	<0.01	<0.2	0.012	0.0100
	09/11/14	200.7/200.8	*<0.01**	0.1300	<0.006	<0.006	0.240	<0.01	0.120	0.0120	<0.2	0.012	<0.01
	03/05/14	200.7/200.8	<0.005	0.1500	<0.006	<0.006	**1.200**	<0.005	0.120	0.0100	<0.2	0.014	0.0120
	03/10/14	200.7/200.8	0.0018	0.1400	<0.006	<0.006	0.280	<0.001	0.095	0.0055	<0.2	0.013	0.0120
	11/12/13	200.7/200.8	0.0034	0.1900	<0.006	<0.006	0.360	<0.001	0.170	0.0100	<0.2	0.012	0.0110
	09/03/13	200.7/200.8	0.0026	0.1700	<0.006	<0.006	0.570	<0.001	0.089	0.0073	<0.2	0.010	<0.01
	06/12/13	200.7/200.8	0.0027	0.1300	<0.006	<0.006	0.250	NL	0.068	0.0076	<0.2	0.011	<0.01
	03/18/13	200.7/200.8	<0.0025	0.1300	<0.006	<0.006	**1.400**	<0.005	0.140	0.0039	<0.2	0.017	0.0110
	11/28/12	200.7/200.8	<0.0025	0.1200	<0.006	<0.006	**1.100**	<0.005	0.099	0.0027	<1.0	0.030	0.0130
	08/21/12	200.7/200.8	<0.0025	0.1300	<0.006	<0.006	0.066	<0.005	0.018	0.0043	<0.2	0.009	<0.01
	06/02/12	200.7/200.8	0.0031	0.2700	0.0068	<0.06	**7.500**	<0.005	**0.360**	0.0052	<1.0	**0.032**	0.0370
	03/20/12	200.7/200.8	<0.0025	0.1300	<0.006	<0.006	0.990	<0.005	0.039	0.0053	<0.2	0.012	<0.01
	12/14/11	200.7/200.8	<0.0025	0.1900	<0.006	<0.006	**2.900**	<0.005	0.120	0.0033	<0.2	0.019	0.0170
	09/27/11	200.7/200.8	<0.0025	0.1300	<0.006	<0.006	0.590	<0.005	0.092	0.0067	<0.2	**0.046**	<0.01
	6/15/2011	200.7/200.8	0.0040	0.1900	<0.006	<0.006	**2.200**	<0.005	0.058	0.0100	<0.2	0.013	0.0120
	3/2/2011	200.7/200.8	<0.0025	0.1700	<0.006	<0.006	1.000	<0.005	0.035	*<0.05**	NA	0.021	<0.01
	11/02/10	6010B	*<0.02**	0.2600	0.0062	<0.006	**6.400**	<0.005	0.160	*<0.05**	<0.2	**0.045**	0.0270
	09/15/10	6010B	*<0.02**	0.1900	<0.006	<0.006	0.560	<0.005	0.044	*<0.05**	<0.2	0.018	<0.02
	06/08/10	6010B	*<0.02**	0.1800	<0.006	NA	NA	<0.005	NA	*<0.05**	<0.2	NA	NA
	03/08/10	6020A	<0.001	0.1330	0.0011	0.0026	0.548	<0.001	0.015	<0.001	<0.1	**0.273**	0.0049

8.8.2 NAPIS-1, NAPIS-2, NAPIS-3, KA-3
Total Metals Analytical Result Summary

STANDARDS			PARAMETERS										
			Arsenic (mg/L)	Barium (mg/L)	Chromium (mg/L)	Copper (mg/L)	Iron (mg/L)	Lead (mg/L)	Manganese (mg/L)	Selenium (mg/L)	Mercury (ug/L)	Uranium (mg/L)	Zinc (mg/L)
WQCC 20 NMAC 6.2.3103 (DEC 2018)			**0.01**	**2**	**0.05**	**1.0**	**1.0**	**0.015**	**0.2**	**0.05**	**2**	**0.03**	**10**
40 CFR 141.62 MCL			0.01	2.0	0.1	1.3	NE	0.015	NE	0.05	2	0.03	NE
NMED Tap Water (Rev 2. JUN 2019)			0.000855	3.28	0.0057	0.7898	13.8	NE	2.02	0.0987	0.626	0.0592	5.96
EPA RSL for Tap Water (NOV 2019)			0.000052	3.8	22	0.8	14	0.015	0.43	0.1	0.63	0.004	6
WELL ID	**DATE SAMPLED**	**METHOD**											
NAPIS-2	10/21/19	200.7/200.8	0.0042	2.0	<0.006	<0.006	**2.8**	0.0011	**0.92**	0.0006	0.055	NA	0.0084
	08/22/19	200.7/200.8	0.0044	1.9	<0.006	0.0042	**3.2**	0.0021	**0.89**	<0.001	0.11	0.0002	0.0064
	05/28/19	200.7/200.8	0.0043	1.7	0.0015	<0.006	**3.2**	0.0020	**0.75**	<0.001	<0.2	0.0002	0.0120
	04/09/19	200.7/200.8	0.0046	**2.1**	0.0017	0.0042	**4.0**	0.0033	**0.65**	0.0005	NA	0.000096	0.0190
	04/30/18	200.7/200.8	0.0047	**2.2**	<0.006	<0.006	**3.7**	0.0012	**0.9**	<0.001	<0.2	0.0003	0.0064
	02/09/18	200.7/200.8	0.0056	**2.2**	<0.006	<0.006	**4.9**	0.0015	**0.99**	0.0044	0.073	0.0004	0.0066
	12/04/17	200.7/200.8	0.0055	1.9	<0.006	<0.006	**2.2**	<0.005	**1.0**	<0.01	<0.2	<0.005	<0.01
	09/05/17	200.7/200.8	0.0068	**2.2**	0.0029	0.0051	**5.7**	0.0044	**1.1**	0.0056	<0.2	0.00056	0.017
	06/01/17	200.7/200.8	0.0050	**2.1**	0.0032	0.0079	**4.8**	0.0029	**0.98**	0.0024	<0.2	0.00066	0.013
	02/21/17	200.7/200.8	0.0080	1.8	0.0062	0.0043	**4.0**	0.0038	**0.96**	0.0067	<0.2	NA	0.016
	11/14/16	200.7/200.8	0.0084	1.9	0.0069	0.0071	**5.5**	0.0070	**1.3**	0.0050	0.11	0.0009	0.0300
	09/01/16	200.7/200.8	0.0087	2.0	0.0110	0.0100	**7.8**	0.0081	**1.4**	0.0110	NL	0.0013	0.057
	06/07/16	200.7/200.8	0.0082	1.6	0.0034	<0.006	**5.6**	0.0053	**1.2**	0.0059	0.08	0.0015	0.022
	10/28/15	200.7/200.8	0.0080	1.6	<0.006	<0.006	**3.3**	0.0018	**1.2**	<0.01	<0.2	<0.0005	0.011
	08/11/15	200.7/200.8	0.0080	1.6	<0.006	0.0099	**3.3**	0.0023	**1.2**	<0.005	<0.2	<0.0005	0.016
	06/02/15	200.7/200.8	*<0.01**	1.6	<0.006	<0.006	**2.9**	<0.005	**1.2**	<0.01	<0.2	<0.005	<0.01
	03/10/15	200.7/200.8	*<0.01**	1.9	<0.006	<0.006	**3.0**	0.0013	**1.1**	<0.01	<0.2	<0.001	<0.01
	11/11/14	200.7/200.8	*<0.01**	1.7	<0.006	<0.006	**2.9**	<0.001	**1.4**	<0.01	<0.2	<0.001	0.013
	09/11/14	200.7/200.8	0.0100	**2.1**	<0.006	0.0120	**3.5**	0.0030	**1.3**	0.0110	<0.2	<0.001	0.047
	06/05/14	200.7/200.8	<0.005	2.0	<0.006	0.0097	**3.9**	<0.005	**1.3**	0.0095	<0.2	<0.005	0.013
	03/10/14	200.7/200.8	0.0060	1.5	<0.006	<0.006	**2.9**	<0.001	**1.4**	0.0071	<0.2	<0.001	<0.01
	11/12/13	200.7/200.8	0.0081	1.4	<0.006	0.0097	**3.2**	0.0013	**1.4**	0.0077	<0.2	<0.001	0.018
	09/03/13	200.7/200.8	0.0063	2.0	<0.006	<0.006	**3.9**	0.0014	**1.4**	0.0045	<0.2	<0.001	0.012
	09/03/13	200.7/200.8	0.0063	2.0	<0.006	<0.006	**3.9**	0.0014	**1.4**	0.0045	<0.2	<0.001	0.012
	06/12/13	200.7/200.8	0.0070	2.0	<0.006	<0.006	**3.2**	NA	**1.5**	0.0051	<0.2	<0.001	<0.01
	03/18/13	200.7/200.8	0.0073	1.6	<0.006	<0.006	**2.9**	<0.005	**1.3**	<0.0025	<0.2	<0.0025	0.015
	11/28/12	200.7/200.8	0.0069	1.7	<0.006	<0.006	**3.3**	0.0052	**1.6**	<0.0025	<0.2	<0.0025	<0.01
	08/21/12	200.7/200.8	0.0097	1.7	<0.006	<0.006	**3.1**	<0.005	**1.7**	0.0031	<0.2	<0.0025	<0.01
	06/12/12	200.7/200.8	0.0100	1.9	<0.006	<0.06	**3.8**	<0.005	**1.9**	0.0035	<1.0	<0.0025	<0.01
	03/20/12	200.7/200.8	**0.0110**	**2.1**	<0.006	0.0071	**5.0**	<0.005	**1.6**	0.0036	<0.2	<0.0025	0.015
	12/14/11	200.7/200.8	0.0099	1.7	<0.006	<0.006	**4.1**	<0.005	**1.4**	<0.0025	<0.2	<0.0025	0.011
	09/27/11	200.7/200.8	**0.0120**	1.7	<0.006	<0.006	**4.2**	<0.005	**1.3**	0.0034	<0.2	<0.0025	0.016
	06/15/11	200.7/200.8	**0.0120**	**2.1**	<0.006	<0.006	**5.4**	<0.005	**1.5**	0.0063	<0.2	<0.0025	<0.01
	03/02/11	200.7/200.8	**0.0110**	**2.4**	<0.006	0.0075	**5.4**	<0.005	**1.3**	*<0.05**	NA	<0.0025	<0.01
	11/02/10	6010B	*<0.02**	1.2	<0.006	<0.006	**4.2**	<0.005	**1.2**	*<0.05**	<0.2	NA	<0.02
	09/15/10	6010B	*<0.02**	1.4	<0.006	<0.006	**4.3**	<0.005	**1.1**	*<0.05**	<0.2	<0.001	<0.02
	06/10/10	6010B	*<0.02**	1.7	<0.006	NA	NA	<0.005	NA	*<0.05**	<0.2	NA	NA
	03/08/10	6020A	0.0046	**2.1**	0.0011	0.0025	**4.7**	0.0014	**1.3**	<0.001	<0.1	<0.001	0.007

8.8.2 NAPIS-1, NAPIS-2, NAPIS-3, KA-3
Total Metals Analytical Result Summary

			PARAMETERS										
STANDARDS			Arsenic (mg/L)	Barium (mg/L)	Chromium (mg/L)	Copper (mg/L)	Iron (mg/L)	Lead (mg/L)	Manganese (mg/L)	Selenium (mg/L)	Mercury (ug/L)	Uranium (mg/L)	Zinc (mg/L)
WQCC 20 NMAC 6.2.3103 (DEC 2018)			**0.01**	**2**	**0.05**	**1.0**	**1.0**	**0.015**	**0.2**	**0.05**	**2**	**0.03**	**10**
40 CFR 141.62 MCL			0.01	2.0	0.1	1.3	NE	0.015	NE	0.05	2	0.03	NE
NMED Tap Water (Rev 2. JUN 2019)			0.000855	3.28	0.0057	0.7898	13.8	NE	2.02	0.0987	0.626	0.0592	5.96
EPA RSL for Tap Water (NOV 2019)			0.000052	3.8	22	0.8	14	0.015	0.43	0.1	0.63	0.004	6
WELL ID	DATE SAMPLED	METHOD											
NAPIS-3	10/21/19	200.7/200.8	0.0020	0.140	0.004	0.0080	**1.3**	0.0016	0.12	0.0060	0.073	NA	0.0360
	08/22/19	200.7/200.8	0.0021	0.00021	0.0073	0.0093	**3.3**	0.0042	**0.21**	0.0037	0.15	**0.041**	0.0730
	05/28/19	200.7/200.8	0.0026	0.270	0.012	<0.006	**4.4**	0.0052	**0.23**	0.0027	<0.2	**0.037**	0.0870
	04/09/19	200.7/200.8	0.0013	0.120	<0.006	0.0047	0.190	0.00045	**0.21**	0.0045	NA	0.023	0.0098
	04/30/18	200.7/200.8	0.0012	0.090	<0.006	<0.006	0.074	<0.0005	0.15	<0.001	<0.2	0.023	0.0053
	02/09/18	200.7/200.8	<0.005	0.095	<0.006	<0.006	0.046	0.0004	0.11	0.0054	0.064	0.024	<0.05
	12/04/17	200.7/200.8	*<0.01**	0.099	<0.006	0.0054	0.040	<0.005	0.13	<0.01	<0.2	0.025	<0.010
	09/05/17	200.7/200.8	0.0062	0.21	0.0085	0.0084	**4.3**	0.0050	0.19	0.012	<0.2	**0.041**	0.064
	06/02/17	200.7/200.8	<0.005	0.093	<0.006	0.0041	<0.020	0.00043	0.10	<0.0050	<0.2	0.030	0.0049
	02/21/17	200.7/200.8	0.0052	0.089	0.0015	<0.006	0.23	0.0140	0.10	0.0088	<0.2	NA	0.027
	11/14/16	200.7/200.8	**0.0110**	**3.0**	**0.078**	0.1100	**29.0**	**0.0790**	**2.9000**	0.0120	0.77	**0.0410**	0.5600
	09/01/16	200.7/200.8	0.0048	1.0	0.025	0.0300	**11.0**	**0.0250**	**0.9600**	0.0086	NA	0.0290	0.1500
	06/07/16	200.7/200.8	*<0.05**	0.3	0.019	0.0110	**6.8**	0.0110	**0.3300**	0.0170	0.13	**0.0390**	0.2000
	10/28/15	200.7/200.8	*<0.01**	0.1	<0.006	<0.006	**1.6**	0.0019	0.093	0.018	<0.2	**0.039**	0.016
	08/11/15	200.7/200.8	*<0.01**	0.1	0.010	<0.006	**2.2**	0.0035	0.081	0.019	<0.2	**0.038**	0.070
	06/03/15	200.7/200.8	*<0.01**	0.1	0.007	0.0075	**1.4**	<0.005	0.080	<0.02	<0.2	**0.038**	0.028
	03/10/15	200.7/200.8	*<0.02**	0.1	<0.006	<0.006	**1.1**	0.0015	**0.260**	*<0.05**	<0.2	**0.042**	0.018
	11/13/14	200.7/200.8	*<0.05**	0.1	0.010	<0.006	**2.1**	0.0034	0.070	*<0.05**	<0.2	**0.039**	0.063
	09/11/14	200.7/200.8	*<0.01**	0.2	<0.006	<0.006	0.1	<0.001	**0.550**	<0.01	<0.2	0.019	<0.01
	06/05/14	200.7/200.8	0.0076	0.2	0.016	<0.006	**5.8**	0.0073	0.160	0.032	<0.2	**0.032**	0.140
	03/10/14	200.7/200.8	*<0.01**	0.2	0.013	0.0073	**4.3**	0.0053	0.120	0.027	<0.2	**0.036**	0.091
	11/12/13	200.7/200.8	0.0097	0.7	0.029	0.0210	**13.0**	**0.0190**	**0.700**	0.030	<0.2	**0.038**	0.240
	09/03/13	200.7/200.8	0.0052	0.2	0.009	0.0061	**3.4**	0.0039	0.160	0.019	<0.2	**0.038**	0.043
	06/12/13	200.7/200.8	0.0064	0.9	0.036	0.0300	**15.0**	NL	**0.570**	0.016	<0.2	**0.039**	0.260
	03/18/13	200.7/200.8	**0.0160**	**3.8**	**0.130**	0.1600	**62.0**	**0.0970**	**3.800**	0.009	1.6	**0.052**	1.100
	11/28/12	200.7/200.8	0.0048	0.6	0.018	0.0180	**9.9**	0.0081	**0.460**	0.010	<0.2	**0.040**	0.120
	10/02/12	200.7/200.8	0.0042	0.2	<0.006	<0.006	**1.8**	<0.005	0.110	0.016	<0.2	**0.037**	0.020
	06/12/12	200.7/200.8	0.0051	0.1	0.008	<0.006	**2.4**	0.0052	0.082	0.017	<1.0	**0.041**	0.057
	03/20/12	200.7/200.8	0.0060	0.2	0.017	0.0083	**5.5**	0.0082	0.120	0.017	<0.2	**0.038**	0.220
	12/14/11	200.7/200.8	0.0044	0.2	0.019	<0.006	**6.0**	0.0081	0.110	0.011	<0.2	**0.041**	0.230
	09/27/11	200.7/200.8	0.0072	0.3	0.044	0.0120	**2.0**	0.0140	**0.210**	**0.200**	<0.2	**0.041**	0.510
	06/15/11	200.7/200.8	0.0070	0.2	<0.006	<0.006	0.7	<0.005	**1.000**	0.012	<0.2	0.013	<0.01
	03/02/11	200.7/200.8	<0.0025	0.1	<0.006	<0.006	0.5	<0.005	0.017	*<0.05**	NA	**0.044**	0.014
	11/02/10	6010B	*<0.02**	0.1	0.008	0.0120	**2.6**	0.0110	0.120	*<0.05**	<0.2	**0.032**	0.590
	09/15/10	6010B	*<0.02**	0.1	**0.098**	0.0140	**3.9**	0.0120	0.150	*<0.05**	<0.2	**0.035**	0.360
	06/10/10	6010B	*<0.02**	0.5	<0.006	NA	NA	<0.005	NA	*<0.05**	<0.2	NA	NA
	03/08/10	6020A	0.0016	0.1	0.004	0.0032	0.3	0.0012	0.018	0.004	<0.2	**0.032**	0.009

8.8.2 NAPIS-1, NAPIS-2, NAPIS-3, KA-3
Total Metals Analytical Result Summary

			PARAMETERS										
STANDARDS			Arsenic (mg/L)	Barium (mg/L)	Chromium (mg/L)	Copper (mg/L)	Iron (mg/L)	Lead (mg/L)	Manganese (mg/L)	Selenium (mg/L)	Mercury (ug/L)	Uranium (mg/L)	Zinc (mg/L)
WQCC 20 NMAC 6.2.3103 (DEC 2018)			**0.01**	**2**	**0.05**	**1.0**	**1.0**	**0.015**	**0.2**	**0.05**	**2**	**0.03**	**10**
40 CFR 141.62 MCL			0.01	2.0	0.1	1.3	NE	0.015	NE	0.05	2	0.03	NE
NMED Tap Water (Rev 2. JUN 2019)			0.000855	3.28	0.0057	0.7898	13.8	NE	2.02	0.0987	0.626	0.0592	5.96
EPA RSL for Tap Water (NOV 2019)			0.000052	3.8	22	0.8	14	0.015	0.43	0.1	0.63	0.004	6
WELL ID	**DATE SAMPLED**	**METHOD**											
KA-3	10/21/19	200.7/200.8	0.008	1.8	<0.006	<0.006	**1.1**	0.00056	**1.6**	<0.005	0.043	NA	<0.01
	08/22/19	200.7/200.8	0.0067	1.5	<0.006	<0.006	**1.6**	0.001	**1.7**	0.00057	0.11	0.0048	<0.01
	05/28/19	200.7/200.8	0.0092	1.3	<0.006	<0.006	**1.6**	0.00043	**1.5**	<0.001	<0.2	0.0077	<0.01
	04/09/19	200.7/200.8	0.0056	1.4	<0.006	<0.006	**1.6**	0.0007	**1.4**	<0.001	NA	0.0093	0.006
	04/30/18	200.7/200.8	0.0025	1.3	<0.006	<0.006	0.23	0.00054	**1.2**	<0.001	<0.2	0.0089	<0.01
	02/09/18	200.7/200.8	0.0046	1.2	<0.006	<0.006	0.27	0.00088	**1.3**	<0.005	0.069	0.012	0.0044
	12/04/17	200.7/200.8	0.0044	1.7	<0.006	<0.006	0.53	<0.005	**1.4**	<0.01	<0.2	0.0074	0.004
	09/05/17	200.7/200.8	0.0072	1.4	<0.006	<0.006	**1.5**	0.00054	**1.4**	0.0082	<0.2	0.010	<0.010
	06/01/17	200.7/200.8	0.0035	0.77	<0.006	<0.006	0.55	0.00038	**1.2**	0.0036	<0.2	0.016	<0.01
	02/21/17	200.7/200.8	0.0068	1.1	<0.006	<0.006	**1.80**	0.00035	**1.1**	0.0057	<0.2	NA	0.0047
	11/14/16	200.7/200.8	0.0068	1.20	<0.006	<0.006	**1.80**	0.0003	**1.30**	0.0049	<0.2	0.009	0.004
	09/01/16	200.7/200.8	0.0050	0.95	<0.006	<0.006	0.93	0.0004	**2.70**	<0.02	NA	0.014	0.007
	06/07/16	200.7/200.8	0.0047	0.77	<0.006	0.0092	0.53	0.0005	**2.00**	0.0045	0.064	0.010	0.011
	10/28/15	200.7/200.8	0.0035	0.31	<0.006	<0.006	0.11	<0.0005	**1.70**	<0.005	<0.2	0.013	<0.01
	08/11/15	200.7/200.8	0.0023	0.29	<0.006	<0.006	0.42	0.0008	**1.60**	<0.005	<0.2	0.019	<0.01
	06/02/15	200.7/200.8	*<0.01**	0.35	<0.006	<0.006	0.29	<0.005	**3.00**	<0.01	<0.2	0.018	<0.01
	03/10/15	200.7/200.8	*<0.01**	0.27	<0.006	<0.006	0.35	<0.001	**1.60**	<0.01	<0.2	0.015	<0.01
	09/11/14	200.7/200.8	**0.0110**	0.07	<0.006	0.0084	1.00	0.0015	0.04	0.0340	<0.2	**0.047**	0.018
	03/10/14	200.7/200.8	<0.005	0.11	<0.006	<0.006	0.95	<0.001	**0.26**	0.0082	<0.2	**0.089**	0.016
	11/12/13	200.7/200.8	0.0033	0.16	<0.006	<0.006	0.22	<0.001	**0.44**	0.0082	<0.2	0.021	0.010
	09/03/13	200.7/200.8	0.0022	0.17	<0.006	<0.006	0.33	<0.001	**0.42**	0.0034	<0.2	0.013	0.013
	06/12/13	200.7-200.8	0.0019	0.16	<0.006	<0.006	0.40	NL	**0.35**	0.0030	<0.2	0.014	<0.01
	03/18/13	200.7/200.8	<0.0025	0.08	<0.006	<0.006	0.62	0.0058	**0.58**	<0.0025	<0.2	0.020	<0.01
	11/28/12	200.7/200.8	0.0060	1.30	0.0360	0.0130	**30.00**	<0.005	**1.70**	0.0100	<0.2	**0.032**	0.092
	08/21/12	200.7/200.8	0.0028	0.30	<0.006	0.0070	0.32	<0.005	**0.81**	<0.0025	<0.2	0.004	0.014
	06/12/12	200.7/200.8	0.0057	0.61	0.0220	0.0092	**15.00**	<0.005	**0.93**	0.0120	<1.0	0.027	0.055
	03/20/12	200.7/200.8	0.0065	0.99	0.0330	0.0170	**24.00**	<0.005	**1.80**	0.0088	<0.2	0.023	0.095
	12/14/11	200.7/200.8	0.0038	0.34	<0.006	<0.006	**1.10**	<0.005	**1.10**	<0.0025	<0.2	0.005	0.013
	09/27/11	200.7/200.8	0.0063	0.30	<0.006	<0.006	**2.20**	<0.005	**1.10**	0.0030	<0.2	0.006	0.024
	06/15/11	200.7/200.8	0.0089	0.22	0.0280	<0.006	**9.40**	0.0140	0.16	0.0300	<0.2	**0.035**	0.320
	03/02/11	200.7/200.8	0.0063	0.44	<0.006	<0.006	0.64	<0.005	**1.40**	*<0.05**	NL	0.015	<0.01
	11/02/10	6010B	*<0.02**	0.60	<0.006	<0.006	**1.20**	<0.005	**1.40**	*<0.05**	<0.2	NL	<0.02
	09/15/10	6010B	*<0.02**	0.47	**0.0960**	<0.006	**1.60**	<0.005	**1.30**	*<0.05**	<0.2	0.003	<0.02
	06/10/10	6010B	*<0.02**	0.17	0.0064	NL	NL	<0.005	NL	*<0.05**	<0.2	NL	<0.02
	03/08/10	6020A	**0.0110**	0.34	0.0014	0.0114	**2.35**	0.0030	**2.10**	<0.001	<0.1	0.007	0.021

8.8.2 NAPIS-1, NAPIS-2, NAPIS-3, KA-3
Total Metals Analytical Result Summary

STANDARDS			PARAMETERS										
			Arsenic (mg/L)	Barium (mg/L)	Chromium (mg/L)	Copper (mg/L)	Iron (mg/L)	Lead (mg/L)	Manganese (mg/L)	Selenium (mg/L)	Mercury (ug/L)	Uranium (mg/L)	Zinc (mg/L)
WQCC 20 NMAC 6.2.3103 (DEC 2018)			**0.01**	**2**	**0.05**	**1.0**	**1.0**	**0.015**	**0.2**	**0.05**	**2**	**0.03**	**10**
40 CFR 141.62 MCL			0.01	2.0	0.1	1.3	NE	0.015	NE	0.05	2	0.03	NE
NMED Tap Water (Rev 2. JUN 2019)			0.000855	3.28	0.0057	0.7898	13.8	NE	2.02	0.0987	0.626	0.0592	5.96
EPA RSL for Tap Water (NOV 2019)			0.000052	3.8	22	0.8	14	0.015	0.43	0.1	0.63	0.004	6
WELL ID	DATE SAMPLED	METHOD											

DEFINITIONS

NA = Not analyzed; NE = Not established

Bold and highlighted values represent values above the applicable standards

STANDARDS

WQCC 20 NMAC 6.2.3103 - Standards for Ground Water of 10,000 mg/l TDS Concentration or Less.

a) Human Health Standards; b) Other Standards for Domestic Water

40 CFR 141.62 Maximum Contaminant Levels for Inorganic Contaminants

NMED Risk Assessment Guidance for Investigations and Remediations Table A-1

EPA Regional Screening Level (RSL) Summary Table

NOTES

Wells marked in red were not sampled because SPH was present in the well or H2S was detected in area

Items notes with a * and italics have a detection limit greater than or equal to the applicable standard.

8.8.3 NAPIS-1, NAPIS-2, NAPIS-3, KA-3
Dissolved Metals Analytical Result Summary

			PARAMETERS								
STANDARDS			Arsenic (mg/L)	Chromium (mg/L)	Copper (mg/L)	Iron (mg/L)	Lead (mg/L)	Manganese (mg/L)	Selenium (mg/L)	Uranium (mg/L)	Zinc (mg/L)
WQCC 20 NMAC 6.2.3103 (DEC 2018)			**0.01**	**0.05**	**1.0**	**1.0**	**0.015**	**0.2**	**0.05**	**0.03**	**10.0**
40 CFR 141.62 MCL			0.01	0.1	1.3	NE	0.015	NE	0.05	0.03	NE
NMED Tap Water (Rev 2. JUN 2019)			0.000855	0.0057	0.7898	13.8	NE	2.02	0.0987	0.0592	5.96
EPA RSL for Tap Water (NOV 2019)			0.000052	22	0.8	14	0.015	0.43	0.1	0.004	6
WELL ID	DATE SAMPLED	METHOD									
NAPIS-1	2nd half 2018 - 2019	--	*Not sample due to presence of H_2S*								
	04/25/18	--	SPH Detected - No samples were collected								
	02/12/18	--	SPH Detected - No samples were collected								
	12/04/17	--	SPH Detected - No samples were collected								
	09/05/17	--	SPH Detected - No samples were collected								
	06/02/17	200.7/200.8	0.0023	<0.006	<0.006	<0.02	<0.0005	0.14	0.0072	0.013	0.019
	02/21/17	200.7/200.8	0.0028	<0.006	<0.006	<0.02	<0.0005	0.09	0.0082	NA	0.018
	11/14/16	200.7/200.8	0.0040	<0.006	<0.006	<0.02	<0.0005	0.093	0.012	**0.036**	0.004
	09/01/16	200.7/200.8	*<0.02**	<0.006	<0.006	<0.02	<0.0005	0.130	0.008	0.013	0.370
	06/07/16	200.7/200.8	0.0031	<0.006	<0.006	<0.02	<0.0005	0.110	0.008	0.015	<0.01
	10/28/15	200.7/200.8	<0.005	<0.006	<0.006	<0.02	<0.0005	0.061	<0.01	0.013	<0.01
	08/11/15	200.7/200.8	<0.005	<0.006	<0.006	<0.02	<0.0025	0.028	0.005	0.020	<0.01
	06/02/15	200.7/200.8	*<0.01**	<0.006	<0.006	<0.02	<0.01	0.067	<0.01	0.013	0.010
	03/10/15	200.7/200.8	*<0.01**	<0.006	<0.006	<0.02	<0.001	0.067	<0.02	0.013	<0.01
	11/11/14	200.7/200.8	*<0.01**	<0.006	<0.006	<0.02	<0.001	0.065	<0.01	0.012	0.050
	09/11/14	200.7/200.8	<0.005	<0.006	<0.006	<0.02	<0.01	0.130	0.012	<0.01	0.010
	06/05/14	200.7/200.8	<0.005	<0.006	<0.006	0.0250	<0.001	0.059	0.013	0.010	<0.01
	03/10/14	200.7/200.8	<0.005	<0.006	<0.006	<0.02	<0.001	0.053	<0.005	0.013	0.017
	11/12/13	200.7/200.8	<0.005	<0.006	<0.006	<0.02	<0.005	0.071	0.011	0.011	<0.01
	09/09/13	200.7/200.8	<0.005	<0.03	<0.03	<0.1	<0.005	0.064	0.009	<0.01	<0.05
	06/12/13	200.7/200.8	0.0034	<0.006	<0.006	0.0570	<0.001	0.027	0.011	0.011	<0.01
	03/18/13	200.7/200.8	0.0016	<0.006	<0.006	<0.02	<0.005	0.004	0.003	0.017	<0.01
	11/28/12	200.7/200.8	0.0019	<0.006	<0.006	<0.02	<0.001	0.010	0.004	0.029	0.013
	08/21/12	200.7/200.8	0.0021	<0.006	<0.006	<0.02	<0.005	0.011	0.004	0.011	0.017
	06/12/12	200.7/200.8	0.0023	<0.006	<0.006	0.0250	<0.005	0.004	0.006	0.014	0.014
	03/20/12	200.7/200.8	0.0018	<0.006	<0.006	<0.02	<0.005	0.006	0.006	0.010	0.022
	12/14/11	200.7/200.8	0.0017	<0.006	<0.006	0.2700	<0.005	0.007	0.004	0.021	<0.01
	09/27/11	200.7/200.8	0.0029	<0.006	<0.006	<0.02	<0.005	0.056	0.009	**0.032**	0.011
	06/15/11	200.7/200.8	0.0047	<0.006	<0.006	<0.020	<0.005	0.002	0.017	0.016	0.028
	03/02/11	200.7/200.8	0.0013	<0.006	<0.006	0.0320	<0.005	<0.002	*<0.05**	0.017	<0.01
	11/02/10	6010B	*<0.1**	<0.006	<0.006	0.0570	<0.005	0.016	*<0.25**	**0.034**	NA
	09/15/10	6010B	*<0.02**	<0.006	<0.006	0.2900	0.0064	0.007	*<0.05**	0.011	NA
	06/08/10	6010B	*<0.2**	<0.006	NA	NA	<0.005	NA	*<0.05**	NA	NA
	03/08/10	6020A	0.0011	<0.001	0.0021	<0.01	<0.001	<0.001	0.000	0.028	0.026

8.8.3 NAPIS-1, NAPIS-2, NAPIS-3, KA-3
Dissolved Metals Analytical Result Summary

			PARAMETERS								
STANDARDS			Arsenic (mg/L)	Chromium (mg/L)	Copper (mg/L)	Iron (mg/L)	Lead (mg/L)	Manganese (mg/L)	Selenium (mg/L)	Uranium (mg/L)	Zinc (mg/L)
WQCC 20 NMAC 6.2.3103 (DEC 2018)			**0.01**	**0.05**	**1.0**	**1.0**	**0.015**	**0.2**	**0.05**	**0.03**	**10.0**
40 CFR 141.62 MCL			0.01	0.1	1.3	NE	0.015	NE	0.05	0.03	NE
NMED Tap Water (Rev 2. JUN 2019)			0.000855	0.0057	0.7898	13.8	NE	2.02	0.0987	0.0592	5.96
EPA RSL for Tap Water (NOV 2019)			0.000052	22	0.8	14	0.015	0.43	0.1	0.004	6
WELL ID	DATE SAMPLED	METHOD									
NAPIS-2	10/21/19	200.7/200.8	0.0036	<0.006	<0.006	**1.2**	<0.0005	**0.79**	0.0003	NA	0.007
	08/22/19	200.7/200.8	0.0030	<0.006	<0.006	**1.4**	<0.0005	**0.82**	0.0003	0.00019	0.008
	05/28/19	200.7/200.8	0.0025	<0.006	<0.006	0.4	<0.0005	**0.78**	<0.001	0.00022	0.016
	04/09/19	200.7/200.8	0.0030	<0.006	0.0014	0.3	0.0001	**0.68**	0.0002	0.00081	0.043
	04/30/18	200.7/200.8	0.0045	**1.6**	<0.006	**1.8**	<0.0005	**0.91**	0.0049	0.00016	0.005
	02/09/18	200.7/200.8	0.0047	<0.006	<0.006	**1.6**	<0.0005	**1.10**	0.0040	0.00029	0.005
	12/04/17	200.7/200.8	0.0049	<0.006	<0.002	**1.8**	<0.0005	**0.94**	0.0045	0.00017	0.010
	09/05/17	200.7/200.8	0.0054	0.0017	<0.006	0.56	<0.0025	**0.89**	<0.02	0.00054	0.026
	06/01/17	200.7/200.8	0.0035	<0.006	<0.006	0.52	0.00021	**0.86**	<0.01	0.00070	0.018
	02/21/17	200.7/200.8	0.0053	<0.006	<0.006	0.88	<0.0005	**0.97**	0.0047	NA	0.020
	11/14/16	200.7/200.8	0.0085	<0.006	<0.006	**1.5**	0.0003	**1.1**	0.0078	0.0005	<0.01
	09/01/16	200.7/200.8	0.0075	<0.006	<0.006	**1.6**	<0.0005	**1.1**	0.0066	0.0003	0.170
	06/07/16	200.7/200.8	0.0086	<0.006	<0.006	**1.8**	<0.0005	**1.1**	0.0062	0.0009	0.055
	10/28/15	200.7/200.8	0.0084	<0.006	<0.006	**1.8**	<0.0005	**1.2**	0.0097	<0.0005	0.022
	08/11/15	200.7/200.8	0.0072	<0.006	<0.006	**1.4**	<0.0025	**1.2**	<0.005	<0.0025	<0.01
	06/02/15	200.7/200.8	*<0.01**	<0.006	<0.006	**1.2**	<0.01	**1.1**	<0.01	<0.01	<0.01
	03/10/15	200.7/200.8	*<0.01**	<0.006	<0.006	**1.9**	<0.001	**1.0**	<0.01	<0.001	<0.01
	11/11/14	200.7/200.8	0.0076	<0.006	<0.006	**1.8**	<0.001	**1.3**	0.0062	<0.001	0.019
	09/11/14	200.7/200.8	0.0070	<0.006	<0.006	**1.6**	<0.01	**1.2**	0.0110	<0.01	0.047
	06/05/14	200.7/200.8	0.0064	<0.006	<0.006	**2.6**	<0.005	**1.4**	0.0100	<0.001	<0.01
	03/10/14	200.7/200.8	0.0053	<0.006	<0.006	**1.8**	<0.001	**1.2**	<0.005	<0.001	0.012
	11/12/13	200.7/200.8	0.0077	<0.006	<0.006	**1.8**	<0.001	**1.3**	0.0080	<0.001	<0.01
	09/09/13	200.7/200.8	0.0069	<0.006	<0.006	**2.6**	<0.005	**1.3**	0.0060	<0.01	0.021
	06/12/13	200.7/200.8	0.0068	<0.006	<0.006	**1.7**	<0.001	**1.6**	0.0071	<0.001	0.010
	03/18/13	200.7/200.8	0.0062	<0.006	<0.006	**1.1**	<0.005	**1.2**	0.0024	<0.002	<0.01
	11/28/12	200.7/200.8	0.0083	<0.006	<0.006	**2.9**	<0.001	**1.8**	0.0034	<0.001	0.011
	08/21/12	200.7/200.8	**0.0140**	<0.006	<0.006	**1.9**	<0.005	**1.6**	**3.4000**	<0.001	0.016
	06/12/12	200.7/200.8	0.0089	<0.006	<0.006	**2.7**	<0.005	**1.6**	0.0047	<0.001	0.180
	03/20/12	200.7/200.8	0.0093	<0.006	<0.006	**3.0**	<0.005	**1.5**	0.0042	<0.001	0.070
	12/14/11	200.7/200.8	0.0089	<0.006	<0.006	**3.2**	<0.005	**1.3**	0.0028	<0.001	<0.01
	09/27/11	200.7/200.8	**0.0110**	<0.006	<0.006	**2.2**	<0.005	**1.2**	0.0050	<0.001	0.015
	06/15/11	200.7/200.8	**0.0120**	<0.006	<0.006	**3.2**	<0.005	**1.3**	0.0095	<0.001	0.041
	03/02/11	200.7/200.8	**0.0130**	<0.006	<0.006	**4.8**	<0.005	<0.002	*<0.05**	<0.001	<0.01
	11/02/10	6010B	*<0.1**	<0.006	<0.006	**2.9**	<0.005	**1.2**	*<0.05**	NA	NA
	09/15/10	6010B	*<0.02**	<0.006	<0.006	**3.7**	<0.005	**1.0**	*<0.05**	<0.001	NA
	06/10/10	6010B	*<0.02**	<0.006	NA	NA	<0.005	NA	*<0.05**	NA	NA
	03/08/10	6020A	0.0047	<0.001	<0.001	**3.8**	<0.001	**1.1**	<0.001	<0.001	0.053

8.8.3 NAPIS-1, NAPIS-2, NAPIS-3, KA-3
Dissolved Metals Analytical Result Summary

			PARAMETERS								
STANDARDS			Arsenic (mg/L)	Chromium (mg/L)	Copper (mg/L)	Iron (mg/L)	Lead (mg/L)	Manganese (mg/L)	Selenium (mg/L)	Uranium (mg/L)	Zinc (mg/L)
WQCC 20 NMAC 6.2.3103 (DEC 2018)			**0.01**	**0.05**	**1.0**	**1.0**	**0.015**	**0.2**	**0.05**	**0.03**	**10.0**
40 CFR 141.62 MCL			0.01	0.1	1.3	NE	0.015	NE	0.05	0.03	NE
NMED Tap Water (Rev 2. JUN 2019)			0.000855	0.0057	0.7898	13.8	NE	2.02	0.0987	0.0592	5.96
EPA RSL for Tap Water (NOV 2019)			0.000052	22	0.8	14	0.015	0.43	0.1	0.004	6
WELL ID	DATE SAMPLED	METHOD									
NAPIS-3	10/21/19	200.7/200.8	0.0019	<0.006	<0.006	0.02	0.00011	0.061	0.0048	NA	0.035
	08/22/19	200.7/200.8	0.0014	<0.006	0.0065	0.39	0.00014	0.063	0.0025	**0.036**	0.018
	05/28/19	200.7/200.8	0.0014	<0.006	0.0022	0.069	0.00033	0.054	0.0032	**0.033**	0.027
	04/09/19	200.7/200.8	0.0011	<0.006	0.0050	0.015	0.00021	0.17	0.0033	0.022	0.034
	04/30/18	200.7/200.8	0.0012	<0.006	<0.006	0.0400	<0.0005	0.14	0.0029	0.022	0.008
	02/09/18	200.7/200.8	0.0026	<0.006	0.0049	<0.02	0.00028	0.12	0.0045	0.025	0.010
	12/04/17	200.7/200.8	*<0.01**	<0.006	0.0048	<0.020	0.00024	0.13	<0.01	0.025	0.012
	09/05/17	200.7/200.8	0.0041	<0.006	<0.006	0.14	0.00058	0.12	0.0093	**0.043**	0.064
	06/02/17	200.7/200.8	0.0021	<0.006	0.0041	<0.020	0.0005	0.10	0.0060	0.030	0.012
	02/21/17	200.7/200.8	0.0039	0.0015	<0.006	0.23	0.0011	0.10	0.0083	NA	0.027
	11/14/16	200.7/200.8	0.0070	0.0031	0.0080	**1.40**	0.0063	**0.3600**	0.0160	**0.034**	0.047
	09/01/16	200.7/200.8	0.0039	<0.006	<0.006	0.31	0.0010	0.0110	0.0096	0.023	0.047
	06/07/16	200.7/200.8	0.0072	0.0038	<0.006	0.23	0.0016	0.0033	0.0220	**0.041**	0.023
	10/28/15	200.7/200.8	*<0.05**	<0.006	<0.006	<0.02	<0.0005	0.0081	*<0.05**	**0.040**	<0.01
	08/11/15	200.7/200.8	*<0.01**	<0.006	<0.006	0.04	<0.0025	0.0029	0.0200	**0.038**	0.049
	06/02/15	200.7/200.8	*<0.01**	<0.006	<0.006	0.06	<0.01	0.0038	0.0160	**0.043**	0.049
	03/10/15	200.7/200.8	*<0.02**	<0.006	<0.006	<0.02	<0.001	<0.002	*<0.05**	**0.036**	0.044
	11/13/14	200.7/200.8	*<0.01**	<0.006	<0.006	<0.02	<0.01	<0.002	*<0.05**	**0.039**	0.089
	09/11/14	200.7/200.8	<0.005	<0.006	<0.006	<0.02	<0.01	**0.4700**	0.0089	0.014	0.011
	06/05/14	200.7/200.8	**0.0110**	0.0073	<0.006	**2.60**	<0.01	0.0580	0.0450	**0.034**	0.070
	03/10/14	200.7/200.8	*<0.01**	<0.006	<0.006	0.24	<0.001	0.0073	0.0110	**0.039**	0.017
	11/12/13	200.7/200.8	0.0076	<0.006	<0.006	0.15	<0.001	0.0047	0.0290	**0.036**	0.024
	09/09/13	200.7/200.8	0.0063	<0.006	<0.006	0.17	<0.001	0.0075	0.0230	**0.041**	0.028
	06/12/13	200.7/200.8	0.0077	<0.006	<0.006	0.57	0.0014	0.0380	0.0320	**0.038**	0.019
	03/18/13	200.7/200.8	0.0048	<0.006	0.0065	**4.60**	<0.005	**0.2500**	0.0120	**0.037**	0.037
	11/28/12	200.7/200.8	0.0052	<0.006	0.0140	**15.00**	0.0100	**0.3900**	0.0120	**0.035**	0.100
	10/02/12	200.7/200.8	0.0040	<0.006	<0.006	**3.20**	<0.005	0.1400	0.0130	**0.038**	0.035
	06/12/12	200.7/200.8	0.0050	<0.006	<0.006	0.02	<0.005	<0.002	0.0190	**0.039**	0.015
	03/20/12	200.7/200.8	0.0039	0.0079	<0.006	0.51	<0.005	0.0140	0.0170	**0.032**	0.084
	12/14/11	200.7/200.8	0.0037	<0.006	<0.006	0.12	<0.005	0.0047	0.0130	**0.040**	0.018
	09/27/11	200.7/200.8	0.0064	<0.006	<0.006	0.14	<0.005	0.0035	0.0250	**0.038**	0.018
	06/15/11	200.7/200.8	0.0085	<0.006	<0.006	0.06	<0.005	**0.9200**	0.0190	0.013	0.270
	03/02/11	200.7/200.8	<0.001	<0.006	<0.006	<0.02	<0.005	<0.002	*<0.05**	**0.039**	<0.01
	11/02/10	6010B	*<0.02**	<0.006	<0.006	0.03	<0.005	0.0100	*<0.05**	**0.035**	NA
	09/15/10	6010B	*<0.02**	<0.006	<0.006	0.02	<0.005	0.0021	*<0.05**	**0.032**	NA
	06/10/10	6010B	*<0.02**	<0.006	NA	NA	<0.005	NA	*<0.05**	NA	NA
	03/08/10	6020A	0.0031	0.0027	0.0022	<0.01	<0.001	0.0014	0.0036	0.030	0.034

8.8.3 NAPIS-1, NAPIS-2, NAPIS-3, KA-3
Dissolved Metals Analytical Result Summary

			PARAMETERS								
STANDARDS			Arsenic (mg/L)	Chromium (mg/L)	Copper (mg/L)	Iron (mg/L)	Lead (mg/L)	Manganese (mg/L)	Selenium (mg/L)	Uranium (mg/L)	Zinc (mg/L)
WQCC 20 NMAC 6.2.3103 (DEC 2018)			**0.01**	**0.05**	**1.0**	**1.0**	**0.015**	**0.2**	**0.05**	**0.03**	**10.0**
40 CFR 141.62 MCL			0.01	0.1	1.3	NE	0.015	NE	0.05	0.03	NE
NMED Tap Water (Rev 2. JUN 2019)			0.000855	0.0057	0.7898	13.8	NE	2.02	0.0987	0.0592	5.96
EPA RSL for Tap Water (NOV 2019)			0.000052	22	0.8	14	0.015	0.43	0.1	0.004	6
WELL ID	DATE SAMPLED	METHOD									
KA-3	10/21/19	200.7/200.8	0.0080	<0.006	<0.006	0.370	0.0001	**1.5**	0.0004	NA	0.023
	08/22/19	200.7/200.8	0.0060	<0.006	<0.006	0.810	0.0001	**1.7**	0.0003	0.0051	0.008
	05/28/19	200.7/200.8	0.0052	<0.006	<0.006	0.370	0.0001	**1.6**	<0.001	0.0073	0.009
	04/09/19	200.7/200.8	0.0033	<0.006	0.0038	0.120	0.000094	**1.5**	0.00029	0.0093	0.050
	04/30/18	200.7/200.8	0.0022	<0.006	<0.006	0.046	<0.0005	**1.2**	0.0036	0.0086	0.007
	02/09/18	200.7/200.8	0.0033	<0.006	0.0044	0.044	0.0002	**1.4**	0.0085	0.0110	0.009
	12/04/17	200.7/200.8	0.0033	<0.006	<0.006	0.045	<0.0005	**1.3**	<0.010	0.0076	0.011
	09/05/17	200.7/200.8	0.0039	<0.006	<0.006	0.088	<0.0005	**1.3**	<0.020	0.010	0.046
	06/01/17	200.7/200.8	0.0028	<0.006	<0.006	0.056	<0.0005	**1.1**	0.0047	0.015	0.026
	02/21/17	200.7/200.8	0.0019	<0.006	<0.006	0.17	<0.0005	**1.1**	0.0035	NA	0.028
	11/14/16	200.7/200.8	0.0036	<0.006	<0.006	0.1200	<0.0005	**1.30**	0.0071	0.0099	0.0031
	09/01/16	200.7/200.8	0.0029	<0.006	<0.006	0.0590	<0.0005	**1.90**	0.0049	0.0075	0.0410
	06/07/16	200.7/200.8	0.0038	<0.006	<0.006	0.1000	<0.0005	**1.50**	0.0058	0.0095	0.0052
	10/28/15	200.7/200.8	<0.005	<0.006	<0.006	<0.02	<0.0005	**0.61**	<0.01	0.0120	<0.01
	08/11/15	200.7/200.8	<0.005	<0.006	<0.006	<0.02	<0.0025	**0.64**	<0.005	0.0180	0.2800
	06/02/15	200.7/200.8	*<0.01**	<0.006	<0.006	<0.02	<0.01	**0.77**	<0.01	0.0190	<0.01
	03/10/15	200.8	0.0020	<0.006	<0.006	<0.02	<0.001	**0.69**	<0.01	0.0180	0.0100
	11/11/14	200.7	NA	NA	NA	NA	NA	NA	NA	NA	NA
	09/11/14	200.7/200.8	**0.0110**	<0.006	<0.006	<0.02	<0.01	<0.002	0.0350	**0.0390**	<0.01
	06/05/14	200.7	NA	NA	NA	NA	NA	NA	NA	NA	NA
	03/10/14	200.7/200.8	<0.005	<0.006	<0.006	<0.02	<0.001	**0.38**	<0.005	**0.0480**	0.0120
	11/12/13	200.7/200.8	0.0036	<0.006	<0.006	<0.02	<0.001	**0.37**	0.0091	0.0200	0.0110
	09/09/13	200.7/200.8	<0.005	<0.006	<0.006	<0.02	<0.005	**0.37**	0.0056	0.0110	0.0300
	06/12/13	200.7/200.8	0.0030	<0.006	<0.006	<0.02	<0.001	**0.31**	0.0077	0.0150	<0.01
	03/18/13	200.7/200.8	0.0019	<0.006	<0.006	<0.02	<0.005	**0.53**	0.0029	0.0190	0.0220
	11/28/12	200.7/200.8	0.0046	<0.006	<0.006	**4.2000**	0.0046	**0.61**	0.0087	0.0240	0.0210
	08/21/12	200.7/200.8	0.0031	<0.006	<0.006	<0.02	<0.005	**0.39**	0.0047	0.0130	0.0220
	06/12/12	200.7/200.8	0.0038	<0.006	<0.006	0.1500	<0.005	**0.38**	0.0072	0.0150	0.0120
	03/20/12	200.7/200.8	0.0033	0.0110	<0.006	0.3500	<0.005	**0.35**	0.0085	0.0180	0.0330
	12/14/11	200.7/200.8	0.0034	<0.006	<0.006	0.1400	<0.005	**0.95**	0.0021	0.0042	<0.01
	09/27/11	200.7/200.8	0.0060	<0.006	<0.006	0.0830	<0.005	**0.89**	0.0057	0.0067	0.0180
	06/15/11	200.7/200.8	0.0100	<0.006	<0.006	<0.02	<0.005	0.00	0.0420	**0.0340**	0.0440
	03/02/11	200.7/200.8	0.0062	<0.006	<0.006	0.1100	<0.005	0.04	*<0.05**	0.0100	<0.01
	11/02/10	6010B	*<0.1**	<0.006	<0.006	0.3200	<0.005	**1.40**	*<0.05**	NA	NA
	09/15/10	6010B	*<0.02**	<0.006	<0.006	0.5600	<0.005	**1.20**	*<0.05**	0.0010	NA
	06/10/10	6010B	*<0.02**	<0.006	NA	NA	<0.005	NA	*<0.05**	NA	NA
	03/08/10	6020A	0.0098	<0.001	0.0043	**1.5500**	<0.001	**1.86**	0.0010	0.0070	0.0382

DEFINITIONS
NA = Not analyzed; NE = Not established
STANDARDS
WQCC 20 NMAC 6.2.3103 - Standards for Ground Water of 10,000 mg/l TDS Concentration or Less.
a) Human Health Standards; b) Other Standards for Domestic Water
40 CFR 141.62 Maximum Contaminant Levels for Inorganic Contaminants
NMED Risk Assessment Guidance for Investigations and Remediations Table A-1
EPA Regional Screening Level (RSL) Summary Table
NOTES
Wells marked in red were not sampled because SPH was present in the well or H2S was detected in area
Items notes with a * and italics have a detection limit greater than or equal to the applicable standard.

8.8.4 NAPIS-1, NAPIS-2, NAPIS-3, KA-3

Volatile and Semi-Volatile Organic Compound Analytical Result Summary

			PARAMETERS														
		STANDARDS	Acenaphthene (mg/L)	Aniline (mg/L)	Anthracene (mg/L)	Benz (a)anthracene (mg/L)	Benzoic Acid (mg/L)	Bis(2-ethylhexyl) phthalate (mg/L)	Fluorene (mg/L)	1-Methyl naphthalene (mg/L)	2-Methyl naphthalene (mg/L)	2-Methyl phenol (mg/L)	3+4-Methyl phenol (mg/L)	Naphthalene (mg/L)	Phenanthrene (mg/L)	Phenol (mg/L)	1,4-Dioxane (mg/L)
		WQCC 20NMAC 6.2.3103 (DECEMBER 2019)	NE	NE	NE	NE	NE	NE	NE	NE	NE	NE	NE	**0.03**	NE	**0.005**	NE
		40 CFR 141.62 MCL	NE	NE	NE	NE	NE	**0.006**	NE	NE	NE	NE	NE	NE	NE	NE	NE
		NMED Tap Water (Rev 2. JUN 2019)	**0.535**	NE	**1.72**	**0.00012**	NE	0.0556	**0.288**	**0.0114**	**0.035**	NE	NE	0.00165	**0.17**	5.76	**0.00459**
		EPA RSL for Tap Water (NOV 2019)	0.53	**0.13**	1.8	0.00003	**75**	0.056	0.29	0.011	0.036	**0.93**	**0.93**	0.00017	NE	5.8	0.00046
WELL ID	**DATE SAMPLED**	**METHOD**															
NAPIS-1	2nd half 2018 - 2019	--	*Not sampled due to presence of H_2S*														
	04/25/18	--	SPH Detected - No samples were collected														
	02/12/18	--	SPH Detected - No samples were collected														
	12/04/17	--	SPH Detected - No samples were collected														
	09/05/17	--	SPH Detected - No samples were collected														
	06/02/17	8260B	<0.01	<0.01		*<0.01**		**0.0063**	<0.01	<0.004	<0.004	<0.01	<0.01	<0.002	<0.01	*<0.01**	
	02/21/17	8260B	<0.01	<0.01		*<0.01**		**0.0069**	<0.01	<0.004	<0.004	<0.01	<0.01	<0.002	<0.01	*<0.01**	
	11/14/16	8260B	NA	NA		NA		NA	NA	<0.004	<0.004	NA		<0.002	NA		
	09/01/16	8260B	NA	NA		NA		NA	NA	<0.004	<0.004	NA		<0.002	NA		
	06/07/16	8260B	NA	NA		NA		NA	NA	<0.004	<0.004	NA		<0.002	NA		
	03/01/16	8260B	NA	NA		NA		NA	NA	<0.004	<0.004	NA		<0.002	NA		
	10/28/15	8260B	NA	NA		NA		NA	NA	<0.004	<0.004	NA		<0.002	NA		
	08/11/15	8270C/8260B	<0.01	<0.01		*<0.01**		*<0.01**	<0.01	<0.01	<0.01	<0.01		<0.01	<0.01		
	06/02/15	8270C	<0.01	<0.01		*<0.01**		*<0.01**	<0.01	<0.01	<0.01	<0.02		<0.01	<0.01		
	03/10/15	8270C	<0.01	<0.01		*<0.01**		*<0.01**	<0.01	<0.01	<0.01	<0.02		<0.01	<0.01		
	11/11/14	8270C	<0.01	<0.01		*<0.01**		*<0.01**	<0.01	<0.01	<0.01	<0.02		<0.01	<0.01		
	09/11/14	8270C	<0.01	<0.01		*<0.01**		*<0.01**	<0.01	<0.01	<0.01	<0.02		<0.01	<0.01		
	06/05/14	8270C	<0.01	<0.01		*<0.01**		*<0.01**	<0.01	<0.01	<0.01	<0.02		<0.01	<0.01		
	03/10/14	8270C	<0.01	<0.01		*<0.01**		*<0.01**	<0.01	<0.01	<0.01	<0.01		<0.01	<0.01		
	11/12/13	8270C	<0.01	<0.01		*<0.01**		*<0.01**	<0.01	<0.01	<0.01	<0.01		<0.01	<0.01		
	09/03/13	8270C	<0.01	<0.01		*<0.01**		*<0.01**	<0.01	<0.01	<0.01	<0.01		<0.01	<0.01		
	06/12/13	8270C	<0.01	<0.01		*<0.01**		*<0.01**	<0.01	<0.01	<0.01	<0.01		<0.01	<0.01		
	03/18/13	8270C	<0.01	<0.01		*<0.01**		*<0.01**	<0.01	<0.01	<0.01	<0.01		<0.01	<0.01		
	12/05/12 [1]	8270C/8260B	<0.01	<0.01		*<0.01**		*<0.01**	<0.01	<0.01	<0.01	<0.01		<0.01	<0.01		
	08/21/12	8270C/8260B	<0.01	<0.01		*<0.01**		*<0.01**	<0.01	<0.01	<0.01	<0.01		<0.01	<0.01		
	06/12/12	8270C	<0.01	<0.01		*<0.01**		*<0.01**	<0.01	<0.01	<0.01	<0.01		<0.01	<0.01		
	03/20/12	8270C	<0.01	<0.01		*<0.01**		*<0.01**	<0.01	<0.01	<0.01	<0.01		<0.01	<0.01		
	01/30/12	8270C	<0.01	<0.01		*<0.01**		*<0.01**	<0.01	<0.01	<0.01	<0.01		<0.01	<0.01		
	12/14/11	8270C	NA	NA		NA		NA	NA	NA	NA	NA		NA	NA		
	09/27/11	8270C	<0.01	<0.01		*<0.01**		*<0.01**	<0.01	<0.01	<0.01	<0.01		<0.01	<0.01		
	06/15/11	8270C/8260B	<0.01	<0.01		*<0.01**		*<0.01**	<0.01	<0.01	<0.01	<0.01		<0.01	<0.01		
	03/02/11	8270C	<0.01	<0.01		*<0.01**		*<0.01**	<0.01	NL	<0.01	<0.01		<0.01	<0.01		
	11/02/10	8270C	<0.01	<0.01		*<0.01**		*<0.01**	<0.01	NL	<0.01	<0.01		<0.01	<0.01		
	09/15/10	8270C	<0.01	<0.01		*<0.01**		*<0.01**	<0.01	NL	<0.01	<0.01		*<0.1**	<0.01		
	06/08/10	8310	<0.0025	NL		NL		NL	<0.0008	<0.002	<0.002	NL		<0.002	<0.0006		
	03/08/10	8270C	<0.01	<0.01		*<0.01**		*<0.01**	<0.01	NL	<0.01	<0.01		<0.01	<0.01		

8.8.4 NAPIS-1, NAPIS-2, NAPIS-3, KA-3

Volatile and Semi-Volatile Organic Compound Analytical Result Summary

			PARAMETERS														
		STANDARDS	Acenaphthene (mg/L)	Aniline (mg/L)	Anthracene (mg/L)	Benz (a)anthracene (mg/L)	Benzoic Acid (mg/L)	Bis(2-ethylhexyl) phthalate (mg/L)	Fluorene (mg/L)	1-Methyl naphthalene (mg/L)	2-Methyl naphthalene (mg/L)	2-Methyl phenol (mg/L)	3+4-Methyl phenol (mg/L)	Naphthalene (mg/L)	Phenanthrene (mg/L)	Phenol (mg/L)	1,4-Dioxane (mg/L)
		WQCC 20NMAC 6.2.3103 (DECEMBER 2019)	NE	NE	NE	NE	NE	NE	NE	NE	NE	NE	NE	**0.03**	NE	**0.005**	NE
		40 CFR 141.62 MCL	NE	NE	NE	NE	NE	**0.006**	NE	NE	NE	NE	NE	NE	NE	NE	NE
		NMED Tap Water (Rev 2. JUN 2019)	**0.535**	NE	**1.72**	**0.00012**	NE	0.0556	**0.288**	**0.0114**	**0.035**	NE	NE	0.00165	**0.17**	5.76	**0.00459**
		EPA RSL for Tap Water (NOV 2019)	0.53	**0.13**	1.8	0.00003	**75**	0.056	0.29	0.011	0.036	**0.93**	**0.93**	0.00017	NE	5.8	0.00046
WELL ID	**DATE SAMPLED**	**METHOD**															
NAPIS-2	10/21/19	8270D/8310	0.006	<0.0005	0.00037	*<0.001**	<0.005	0.00073	0.00262	**0.0229**	**0.0375**	<0.005	<0005	0.0176	0.0007	0.0024	0.00229
	08/22/19	8270/8260B	0.0048	<0.01		*<0.01**	<0.02	*<0.01**	<0.01	**0.016**	<0.01	<0.01	<0.01	0.013	<0.01	*<0.01**	
	05/28/19	8270/8260B/8011/504.1	0.0049	<0.01		*<0.01**	<0.02	*<0.01**	0.004	0.02	<0.01	<0.01	<0.01	0.0094	<0.01	*<0.01**	
	04/09/19	8270/8260B	<0.01	<0.01		*<0.01**	0.0065	*<0.01**	<0.01	<0.01	<0.01	<0.01	<0.01	<0.01	<0.01	**0.029**	
	04/30/18	8260B	NA	NA		NA		NA	NA	0.011	0.0017	NA	NA	0.0078	NA	NA	
	02/09/18	8260B	NA	NA		NA		NA	NA	0.0055	0.0014	NA	NA	0.0044	NA	NA	
	12/04/17	8260B	NA	NA		NA		NA	NA	0.0051	0.00034	NA	NA	0.0037	NA	NA	
	09/05/17	8260B	<0.05	<0.05		*<0.05**		**0.025**	<0.05	0.0023	0.00048	<0.05	<0.05	0.0026	<0.05	*<0.05**	
	06/01/17	8260B	<0.01	<0.01		*<0.01**		**0.0067**	<0.01	0.0013	0.00023	<0.01	<0.01	0.0018	<0.01	*<0.01**	
	02/21/17	8260B	<0.01	<0.01		*<0.01**		**0.008**	<0.01	0.0023	0.00069	<0.01	<0.01	0.0023	<0.01	*<0.01**	
	11/14/16	8260B	NA	NA		NA		NA	NA	0.00017	<0.004	NA	NA	0.00014	NA	NA	
	09/01/16	8260B	NA	NA		NA		NA	NA	0.002	<0.004	NA	NA	0.0021	NA	NA	
	06/07/16	8260B	NA	NA		NA		NA	NA	0.0012	0.00044	NA	NA	0.0006	NA	NA	
	03/01/16	8260B	NA	NA		NA		NA	NA	<0.004	<0.004	NA	NA	<0.002	NA	NA	
	10/28/15	8260B	NA	NA		NA		NA	NA	0.0061	<0.004	NA	NA	0.0029	NA	NA	
	08/11/15	8270C/8260B	<0.01	<0.01		*<0.01**		*<0.01**	<0.01	<0.01	<0.01	<0.01	<0.01	0.0033	<0.01	*<0.01**	
	06/02/15	8270C	<0.01	<0.01		*<0.01**		*<0.01**	<0.01	<0.01	<0.01	<0.01	<0.01	<0.01	<0.01	*<0.01**	
	03/10/15	8270C	<0.01	<0.01		*<0.01**		*<0.01**	<0.01	<0.01	<0.01	<0.01	<0.01	<0.01	<0.01	*<0.01**	
	11/01/14	8270C	<0.05	<0.05		*<0.05**		*<0.05**	<0.05	*<0.05**	*<0.05**	<0.05	<0.05	*<0.05**	<0.05	*<0.05**	
	09/11/14	8270C/8260B	<0.01	<0.01		*<0.01**		*<0.01**	<0.01	<0.01	<0.01	<0.02	<0.01	<0.01	<0.01	*<0.01**	
	06/05/14	8270C	<0.01	<0.01		*<0.01**		*<0.01**	<0.01	<0.01	<0.01	<0.02	<0.01	<0.01	<0.01	*<0.01**	
	03/10/14	8270C	<0.01	<0.01		*<0.01**		*<0.01**	<0.01	<0.01	<0.01	<0.01	<0.01	<0.01	<0.01	*<0.01**	
	11/12/13	8270C	<0.01	<0.01		*<0.01**		*<0.01**	<0.01	<0.01	<0.01	<0.01	<0.01	<0.01	<0.01	*<0.01**	
	11/12/13	8270C	<0.01	<0.01		*<0.01**		*<0.01**	<0.01	<0.01	<0.01	<0.01	<0.01	<0.01	<0.01	*<0.01**	
	09/03/13	8270C/8260B	<0.01	<0.01		*<0.01**		*<0.01**	<0.01	0.0094	<0.004	<0.01	<0.01	0.0048	<0.01	*<0.01**	
	06/12/13	8270C/8260B	<0.01	<0.01		*<0.01**		*<0.01**	<0.01	<0.01	<0.01	<0.01	<0.01	<0.01	<0.01	*<0.01**	
	03/18/13	8270C/8260B	<0.01	<0.01		*<0.01**		*<0.01**	<0.01	<0.01	<0.01	<0.01	<0.01	<0.01	<0.01	*<0.01**	
	12/05/12 [1]	8270C/8260B	<0.01	<0.01		*<0.01**		*<0.01**	<0.01	<0.01	<0.01	<0.01	<0.01	<0.01	<0.01	*<0.01**	
	08/21/12	8270C/8260B	<0.01	<0.01		*<0.01**		*<0.01**	<0.01	<0.01	<0.01	<0.01	<0.01	<0.01	<0.01	*<0.01**	
	06/12/12	8270C	<0.01	<0.01		*<0.01**		*<0.01**	<0.01	<0.01	<0.01	<0.01	<0.01	<0.01	<0.01	**0.016**	
	03/20/12	8270C	<0.01	<0.01		*<0.01**		*<0.01**	<0.01	**0.015**	<0.01	0.015	0.034	<0.01	<0.01	**0.078**	
	12/14/11	8270C	<0.01	<0.01		*<0.01**		*<0.01**	<0.01	0.01	<0.01	<0.01		<0.01	<0.01		
	09/27/11	8270C	<0.01	<0.01		*<0.01**		*<0.01**	<0.01	**0.012**	<0.01	<0.01		0.011	<0.01		
	06/15/11	8270C/8260B	<0.01	<0.01		*<0.01**		*<0.01**	<0.01	*<0.02**	<0.01	<0.01		<0.01	<0.01		
	03/02/11	8270C	<0.01	<0.01		*<0.01**		0.01	0.012	NL	<0.01	<0.01		0.015	<0.01		
	11/02/10	8270C	0.01	<0.01		*<0.01**		*<0.01**	0.011	NL	<0.01	<0.01		<0.01	<0.01		
	09/15/10	8270C	<0.01	<0.01		*<0.01**		*<0.01**	<0.05	NL	<0.01	<0.01		<0.01	<0.01		
	06/10/10	8310	<0.0025	NL		<0.00007		NL	0.011	**0.033**	<0.002	NL		**0.089**	0.005		
	03/08/10	8270C/8260B	<0.05	<0.05		*<0.05**		*<0.05**	<0.05	NL	*<0.05**	<0.05		0.0036	<0.05		

8.8.4 NAPIS-1, NAPIS-2, NAPIS-3, KA-3

Volatile and Semi-Volatile Organic Compound Analytical Result Summary

STANDARDS			PARAMETERS														
			Acenaphthene (mg/L)	Aniline (mg/L)	Anthracene (mg/L)	Benz (a)anthracene (mg/L)	Benzoic Acid (mg/L)	Bis(2-ethylhexyl) phthalate (mg/L)	Fluorene (mg/L)	1-Methyl naphthalene (mg/L)	2-Methyl naphthalene (mg/L)	2-Methyl phenol (mg/L)	3+4-Methyl phenol (mg/L)	Naphthalene (mg/L)	Phenanthrene (mg/L)	Phenol (mg/L)	1,4-Dioxane (mg/L)
WQCC 20NMAC 6.2.3103 (DECEMBER 2019)			NE	NE	NE	NE	NE	NE	NE	NE	NE	NE	NE	**0.03**	NE	**0.005**	NE
40 CFR 141.62 MCL			NE	NE	NE	NE	NE	**0.006**	NE	NE	NE	NE	NE	NE	NE	NE	NE
NMED Tap Water (Rev 2. JUN 2019)			**0.535**	NE	**1.72**	**0.00012**	NE	0.0556	**0.288**	**0.0114**	**0.035**	NE	NE	0.00165	**0.17**	5.76	**0.00459**
EPA RSL for Tap Water (NOV 2019)			0.53	**0.13**	1.8	0.00003	**75**	0.056	0.29	0.011	0.036	**0.93**	**0.93**	0.00017	NE	5.8	0.00046
WELL ID	**DATE SAMPLED**	**METHOD**															
NAPIS-3	10/21/19	8070D/8310	<0.005	<0.005	<0.005	*<0.001**		<0.005	<0.005	<0.005	<0.005	<0.005	<0.005	<0.005	<0.005	*<0.005**	*<0.01**
	08/22/19	8270C/8260B	<0.01	<0.01		*<0.01**		*<0.01**	<0.01	<0.01	<0.01	<0.01	<0.01	<0.01	<0.01	*<0.01**	
	05/28/19	8270C/8260B	<0.01	<0.01		*<0.01**		*<0.01**	<0.01	<0.01	<0.01	<0.01	<0.01	<0.01	<0.01	*<0.01**	
	04/09/19	8270/8260B	<0.01	<0.01		*<0.01**		*<0.01**	<0.01	<0.01	<0.01	<0.01	<0.01	<0.01	<0.01	*<0.01**	
	04/30/18	8260B	NA	NA		NA		NA	NA	0.00051	<0.004	NA	NA	0.00046	NA	NA	
	02/09/18	8260B	NA	NA		NA		NA	NA	<0.004	<0.004	NA	NA	<0.002	NA	NA	
	12/04/17	8260B	NA	NA		NA		NA	NA	<0.004	<0.004	NA	NA	<0.002	NA	NA	
	09/05/17	8260B	<0.01	<0.01		*<0.01**		0.0049	<0.01	<0.004	<0.004	<0.01	<0.01	<0.002	<0.01	*<0.01**	
	06/02/17	8260B	<0.01	<0.01		*<0.01**		0.0054	<0.01	<0.004	<0.004	<0.01	<0.01	<0.002	<0.01	*<0.01**	
	02/21/17	8260B	<0.01	<0.01		*<0.01**		**0.0071**	<0.01	<0.004	<0.004	<0.01	<0.01	<0.002	<0.01	*<0.01**	
	11/14/16	8260B	NA	NA		NA		NA	NA	<0.004	<0.004	NA	NA	<0.002	NA	NA	
	09/01/16	8260B	NA	NA		NA		NA	NA	<0.004	<0.004	NA	NA	0.0001	NA	NA	
	06/07/16	8260B	NA	NA		NA		NA	NA	<0.004	<0.004	NA	NA	<0.002	NA	NA	
	03/01/16	8260B	NA	NA		NA		NA	NA	0.0021	<0.004	NA	NA	0.00055	NA	NA	
	10/28/15	8260B	NA	NA		NA		NA	NA	<0.001	<0.001	NA		<0.002	NA		
	08/11/15	8270C/8260B	<0.01	<0.01		*<0.01**		*<0.01**	<0.01	<0.01	<0.01	<0.01		<0.01	<0.01		
	06/02/15	8270C	<0.01	<0.01		*<0.01**		*<0.01**	<0.01	<0.01	<0.01	<0.01		<0.01	<0.01		
	03/10/15	8270C	<0.01	<0.01		*<0.01**		*<0.01**	<0.01	<0.01	<0.01	<0.01		<0.01	<0.01		
	11/13/14	8270C	<0.01	<0.01		*<0.01**		*<0.01**	<0.01	<0.01	<0.01	<0.01		<0.01	<0.01		
	09/14/15	8270C	<0.01	<0.01		*<0.01**		*<0.01**	<0.01	<0.01	<0.01	<0.02		<0.01	<0.01		
	06/05/14	8270C	<0.01	<0.01		*<0.01**		*<0.01**	<0.01	<0.01	<0.01	<0.02		<0.01	<0.01		
	03/10/14	8270C	<0.01	<0.01		*<0.01**		*<0.01**	<0.01	<0.01	<0.01	<0.01		<0.01	<0.01		
	11/12/13	8270C	<0.01	<0.01		*<0.01**		*<0.01**	<0.01	<0.01	<0.01	<0.01		<0.01	<0.01		
	09/03/13	8270C/8260B	<0.01	<0.01		*<0.01**		*<0.01**	<0.01	<0.01	<0.01	<0.01		<0.01	<0.01		
	06/12/13	8270C	<0.01	<0.01		*<0.01**		*<0.01**	<0.01	<0.01	<0.01	<0.01		<0.01	<0.01		
	03/18/13	8270C	<0.01	<0.01		*<0.01**		*<0.01**	<0.01	<0.01	<0.01	<0.01		<0.01	<0.01		
	12/05/12 [1]	8270C	<0.01	<0.01		*<0.01**		*<0.01**	<0.01	<0.01	<0.01	<0.01		<0.01	<0.01		
	10/02/12	8270C	<0.01	<0.01		*<0.01**		*<0.01**	<0.01	<0.01	<0.01	<0.01		<0.01	<0.01		
	06/12/12	8270C	<0.01	<0.01		*<0.01**		*<0.01**	<0.01	<0.01	<0.01	<0.01		<0.01	<0.01		
	03/20/12	8270C	<0.01	<0.01		*<0.01**		*<0.01**	<0.01	<0.01	<0.01	<0.01		<0.01	<0.01		
	12/14/11	8270C	<0.01	<0.01		*<0.01**		*<0.01**	<0.01	<0.01	<0.01	<0.01		<0.01	<0.01		
	09/27/11	8270C	<0.01	<0.01		*<0.01**		*<0.01**	<0.01	<0.01	<0.01	<0.01		<0.01	<0.01		
	06/15/11	8270C/8260B	<0.01	<0.01		*<0.01**		*<0.01**	<0.01	<0.004	<0.01	<0.01		<0.01	<0.01		
	03/02/11	8270C	<0.01	<0.01		*<0.01**		*<0.01**	<0.01	NL	<0.01	<0.01		<0.01	<0.01		
	11/02/10	8270C	<0.01	<0.01		*<0.01**		*<0.01**	<0.01	NL	<0.01	<0.01		<0.01	<0.01		
	09/15/10	8270C	<0.01	<0.01		*<0.01**		*<0.01**	<0.01	NL	<0.01	<0.01		<0.01	<0.01		
	06/10/10	8310	<0.005	NL		NL		NL	0.0049	**0.05**	<0.002	NL		**0.045**	0.0045		
	03/08/10	8270C/8260B	<0.01	<0.01		*<0.01**		*<0.01**	<0.01	NL	<0.01	<0.01		<0.01	<0.01		

8.8.4 NAPIS-1, NAPIS-2, NAPIS-3, KA-3

Volatile and Semi-Volatile Organic Compound Analytical Result Summary

			PARAMETERS														
		STANDARDS	Acenaphthene (mg/L)	Aniline (mg/L)	Anthracene (mg/L)	Benz (a)anthracene (mg/L)	Benzoic Acid (mg/L)	Bis(2-ethylhexyl) phthalate (mg/L)	Fluorene (mg/L)	1-Methyl naphthalene (mg/L)	2-Methyl naphthalene (mg/L)	2-Methyl phenol (mg/L)	3+4-Methyl phenol (mg/L)	Naphthalene (mg/L)	Phenanthrene (mg/L)	Phenol (mg/L)	1,4-Dioxane (mg/L)
		WQCC 20NMAC 6.2.3103 (DECEMBER 2019)	NE	NE	NE	NE	NE	NE	NE	NE	NE	NE	NE	**0.03**	NE	**0.005**	NE
		40 CFR 141.62 MCL	NE	NE	NE	NE	NE	**0.006**	NE	NE	NE	NE	NE	NE	NE	NE	NE
		NMED Tap Water (Rev 2. JUN 2019)	**0.535**	NE	**1.72**	**0.00012**	NE	0.0556	**0.288**	**0.0114**	**0.035**	NE	NE	0.00165	**0.17**	5.76	**0.00459**
		EPA RSL for Tap Water (NOV 2019)	0.53	**0.13**	1.8	0.00003	**75**	0.056	0.29	0.011	0.036	**0.93**	**0.93**	0.00017	NE	5.8	0.00046
WELL ID	**DATE SAMPLED**	**METHOD**															
KA-3	10/21/19	8270D/8310	0.00078	<0.005	<0.005	*<0.001**	<0.0005	<0.005	0.00026	0.00222	0.00103	<0.005	<0.005	0.00202	0.00013	0.0011	*<0.01**
	08/22/19	8270C/8260B	<0.01	<0.01		*<0.01**	<0.02	*<0.01**	<0.01	**0.014**	0.0071	<0.01	<0.01	0.012	<0.01	*<0.01**	
	05/28/19	8270C	<0.01	<0.01		*<0.01**	<0.02	*<0.01**	<0.01	0.0035	<0.01	<0.01	<0.01	<0.01	<0.01	*<0.01**	
	04/09/19	8270/8260B	<0.01	<0.01		*<0.01**	0.011	*<0.01**	<0.01	<0.01	<0.01	<0.01	<0.01	<0.01	<0.01	0.011	
	04/30/18	8260B	NA	NA		NA		NA	NA	0.0035	0.0013	NA	NA	0.0082	NA	NA	
	02/09/18	8260B	NA	NA		NA		NA	NA	0.00092	0.00066	NA	NA	0.001	NA	NA	
	12/04/17	8260B	NA	NA		NA		NA	NA	0.00091	<0.004	NA	NA	0.0011	NA	NA	
	09/05/17	8260B	<0.01	<0.01		*<0.01**		0.0049	<0.01	0.00055	0.00042	<0.01	<0.01	0.0005	<0.01	*<0.01**	
	06/01/17	8260B	<0.01	<0.01		*<0.01**		0.0054	<0.01	0.00023	<0.004	<0.01	<0.01	0.00029	<0.01	*<0.01**	
	02/21/17	8260B	<0.01	<0.01		*<0.01**		**0.0071**	<0.01	0.0032	0.0012	<0.01	<0.01	0.004	<0.01	*<0.01**	
	11/14/16	8260B	NA	NA		NA		NA	NA	0.0011	0.00062	NA		0.0015	NA		
	09/01/16	8260B	NA	NA		NA		NA	NA	0.0028	0.0018	NA		0.005	NA		
	06/07/16	8260B	NA	NA		NA		NA	NA	0.00063	0.00046	NA		0.0011	NA		
	03/03/16	8260B	NA	NA		NA		NA	NA	0.00033	<0.004	NA		0.00077	NA		
	10/28/15	8260B	NA	NA		NA		NA	NA	<0.004	<0.004	NA		<0.002	NA		
	08/11/15	8270C/8260B	<0.01	<0.01		*<0.01**		*<0.01**	<0.01	<0.01	<0.01	<0.01		<0.01	<0.01		
	06/02/15	8270C	<0.01	<0.01		*<0.01**		*<0.01**	<0.01	<0.01	<0.01	<0.01		<0.01	<0.01		
	03/10/15	8270C	<0.01	<0.01		*<0.01**		*<0.01**	<0.01	<0.01	<0.01	<0.01		<0.01	<0.01		
	11/11/14	8270C	<0.01	<0.01		*<0.01**		*<0.01**	<0.01	<0.01	<0.01	<0.01		<0.01	<0.01		
	09/11/14	8270C	<0.01	<0.01		*<0.01**		*<0.01**	<0.01	<0.01	<0.01	<0.02		<0.01	<0.01		
	06/05/14	8270C	<0.01	<0.01		*<0.01**		*<0.01**	<0.01	<0.01	<0.01	<0.02		<0.01	<0.01		
	03/10/14	8270C	<0.01	<0.01		*<0.01**		*<0.01**	<0.01	<0.01	<0.01	<0.01		<0.01	<0.01		
	11/12/13	8270C	<0.01	<0.01		*<0.01**		*<0.01**	<0.01	<0.01	<0.01	<0.01		<0.01	<0.01		
	09/03/13	8270C/8260B	<0.01	<0.01		*<0.01**		*<0.01**	<0.01	<0.01	<0.01	<0.01		<0.01	<0.01		
	06/12/13	8270C	<0.01	<0.01		*<0.01**		*<0.01**	<0.01	<0.01	<0.01	<0.01		<0.01	<0.01		
	03/18/13	8270C	<0.01	<0.01		*<0.01**		*<0.01**	<0.01	<0.01	<0.01	<0.01		<0.01	<0.01		
	12/5/2012	8270C/8260B	<0.01	<0.01		*<0.01**		*<0.01**	<0.01	<0.01	<0.01	<0.01		<0.01	<0.01		
	08/21/12	8270C/8260B	<0.01	<0.01		*<0.01**		*<0.01**	<0.01	<0.01	<0.01	<0.01		<0.01	<0.01		
	06/12/12	8270C	<0.01	<0.01		*<0.01**		*<0.01**	<0.01	<0.01	<0.01	<0.01		<0.01	<0.01		
	03/20/12	8270C	<0.01	<0.01		*<0.01**		*<0.01**	<0.01	<0.01	<0.01	<0.01		<0.01	<0.01		
	12/14/11	8270C	<0.01	<0.01		*<0.01**		*<0.01**	<0.01	**0.035**	<0.01	<0.01		0.019	<0.01		
	09/27/11	8270C	<0.01	<0.01		*<0.01**		*<0.01**	<0.01	<0.01	<0.01	<0.01		<0.01	<0.01		
	06/15/11	8270C/8260B	<0.01	<0.01		*<0.01**		*<0.01**	<0.01	<0.01	<0.01	<0.01		<0.01	<0.01		
	03/02/11	8270C	<0.01	<0.01		*<0.01**		*<0.01**	<0.01	NL	<0.01	<0.01		<0.01	<0.01		
	11/02/10	8270C	<0.01	<0.01		*<0.01**		*<0.01**	<0.01	NL	<0.01	<0.01		0.013	<0.01		
	09/15/10	8270C/8260B	<0.01	<0.01		*<0.01**		*<0.01**	<0.01	NL	<0.01	<0.01		0.011	<0.01		
	06/10/10	8310	<0.005	NL		<0.00007		NL	0.0008	<0.002	<0.002	0.0045		<0.002	<0.0006		
	03/08/10	8270C/8260B	<0.01	<0.01		*<0.01**		*<0.01**	<0.01	NL	<0.01	<0.01		<0.01	<0.01		

8.8.4 NAPIS-1, NAPIS-2, NAPIS-3, KA-3

Volatile and Semi-Volatile Organic Compound Analytical Result Summary

			PARAMETERS													
STANDARDS			Acenaphthene (mg/L)	Aniline (mg/L)	Anthracene (mg/L)	Benz (a)anthracene (mg/L)	Benzoic Acid (mg/L)	Bis(2-ethylhexyl) phthalate (mg/L)	Fluorene (mg/L)	1-Methyl naphthalene (mg/L)	2-Methyl naphthalene (mg/L)	2-Methyl phenol (mg/L)	3+4-Methyl phenol (mg/L)	Naphthalene (mg/L)	Phenanthrene (mg/L)	Phenol (mg/L)	1,4-Dioxane (mg/L)
WQCC 20NMAC 6.2.3103 (DECEMBER 2019)			NE	NE	NE	NE	NE	NE	NE	NE	NE	NE	NE	**0.03**	NE	**0.005**	NE
40 CFR 141.62 MCL			NE	NE	NE	NE	NE	**0.006**	NE	NE	NE	NE	NE	NE	NE	NE	NE
NMED Tap Water (Rev 2. JUN 2019)			**0.535**	NE	**1.72**	**0.00012**	NE	0.0556	**0.288**	**0.0114**	**0.035**	NE	NE	0.00165	**0.17**	5.76	**0.00459**
EPA RSL for Tap Water (NOV 2019)			0.53	**0.13**	1.8	0.00003	**75**	0.056	0.29	0.011	0.036	**0.93**	**0.93**	0.00017	NE	5.8	0.00046
WELL ID	DATE SAMPLED	METHOD															

DEFINITIONS

NA = Not analyzed; NE = Not established

Bold and highlighted values represent values above the applicable standards

STANDARDS

WQCC 20 NMAC 6.2.3103 - Standards for Ground Water of 10,000 mg/l TDS Concentration or Less.

a) Human Health Standards; b) Other Standards for Domestic Water

40 CFR 141.62 Detection Limits for Inorganic Contaminants

EPA Regional Screening Level (RSL) Summary Table

NMED Risk Assessment Guidance for Investigations and Remediations Table A-1

NOTES

Wells marked in red were not sampled because SPH was present in the well or H2S was detected in area

Items notes with a * and italics have a detection limit greater than or equal to the applicable standard.

8.8.5 NAPIS-1, NAPIS-2, NAPIS-3, KA-3
Volatile and Semi-Volatile Organic Compound Analytical Result Summary

			PARAMETERS																	
STANDARDS			1,2,4-Trimethyl benzene (mg/L)	1,3,5-Trimethyl benzene (mg/L)	1,2-Dichloro ethane (EDC) (mg/L)	1,2-Dibro methane (EDB) (mg/L)	Naphthalene (mg/L)	1-Methyl naphthalene (mg/L)	2-Methyl naphthalene (mg/L)	Bromodichloro methane (mg/L)	Acetone (mg/L)	cis-1,2-DCE (mg/L)	4-Chloro toluene (mg/L)	1,1-Dichloro ethane (mg/L)	1,1-Dichloro ethene (mg/L)	Isopropyl benzene (mg/L)	4-Isopropyl toluene (mg/L)	n-Butyl benzene (mg/L)	n-Propyl benzene (mg/L)	sec-Butyl benzene (mg/L)	tert-Butyl benzene (mg/L)
WQCC 20NMAC 6.2.3103 (DECEMBER 2019)			NE	NE	**0.005**	**0.00005**	**0.03**	NE	NE	NE	NE	**0.07**	NE	**0.025**	**0.007**	NE	NE	NE	NE	NE	NE
40 CFR 141.62 MCL			NE	NE	0.005	0.00005	NE	NE	NE	NE	NE	0.07	NE	NE	0.007	NE	NE	NE	NE	NE	NE
NMED Tap Water (Rev 2. JUN 2019)			NE	NE	0.0017	0.0000747	0.00165	**0.0114**	**0.035**	**0.00134**	**14.06**	0.0365	NE	0.0275	0.284	**0.447**	NE	NE	NE	NE	NE
EPA RSL for Tap Water (NOV 2019)			**0.056**	**0.06**	0.0017	0.0000075	0.00017	0.011	0.036	0.00013	14	0.036	**0.25**	0.028	0.28	0.45	NE	**1**	**0.66**	**2**	**0.69**
Well ID	**DATE SAMPLED**	**METHOD**																			
NAPIS-1	2nd half 2018 - 2019	--	*Not sampled due to presence of H_2S*																		
	04/25/18	--	SPH Detected - No samples were collected																		
	02/12/18	--	SPH Detected - No samples were collected																		
	12/04/17	--	SPH Detected - No samples were collected																		
	09/05/17	--	SPH Detected - No samples were collected																		
	06/02/17	8260B	<0.001		<0.001					<0.001	0.003	<0.001	<0.001	<0.001	<0.001	<0.001		<0.003	<0.001	<0.001	<0.001
	02/21/17	8260B	<0.001		<0.001					<0.001	<0.01	<0.001	<0.001	<0.001	<0.001	<0.001		<0.003	<0.001	<0.001	<0.001
	11/14/16	8260B										<0.001		<0.001	<0.001	<0.001		<0.003	<0.001	<0.001	
	09/01/16	8260B										<0.001		<0.001	<0.001	<0.001		<0.003	<0.001	<0.001	
	06/07/16	8260B										<0.001		<0.001	*<0.01**	<0.001		<0.003	<0.001	<0.001	
	03/01/16	8260B										<0.001		<0.001	*<0.01**	<0.001		<0.003	<0.001	<0.001	
	10/28/15	8260B																			
	08/11/15	8270C/8260B																			
	06/02/15	8270C																			
	03/10/15	8270C																			
	11/11/14	8270C																			
	09/11/14	8270C																			
	06/05/14	8270C																			
	03/10/14	8270C																			
	11/12/13	8270C																			
	09/03/13	8270C																			
	06/12/13	8270C																			
	03/18/13	8270C																			
	12/05/12 [1]	8270C/8260B																			
	08/21/12	8270C/8260B																			
	06/12/12	8270C																			
	03/20/12	8270C																			
	01/30/12	8270C																			
	12/14/11	8270C																			
	09/27/11	8270C																			
	06/15/11	8270C/8260B																			
	03/02/11	8270C																			
	11/02/10	8270C																			
	09/15/10	8270C																			
	06/08/10	8310																			
	03/08/10	8270C																			

8.8.5 NAPIS-1, NAPIS-2, NAPIS-3, KA-3
Volatile and Semi-Volatile Organic Compound Analytical Result Summary

			PARAMETERS																		
STANDARDS			1,2,4-Trimethyl benzene (mg/L)	1,3,5-Trimethyl benzene (mg/L)	1,2-Dichloro ethane (EDC) (mg/L)	1,2-Dibro methane (EDB) (mg/L)	Naphthalene (mg/L)	1-Methyl naphthalene (mg/L)	2-Methyl naphthalene (mg/L)	Bromodichloro methane (mg/L)	Acetone (mg/L)	cis-1,2-DCE (mg/L)	4-Chloro toluene (mg/L)	1,1-Dichloro ethane (mg/L)	1,1-Dichloro ethene (mg/L)	Isopropyl benzene (mg/L)	4-Isopropyl toluene (mg/L)	n-Butyl benzene (mg/L)	n-Propyl benzene (mg/L)	sec-Butyl benzene (mg/L)	tert-Butyl benzene (mg/L)
WQCC 20NMAC 6.2.3103 (DECEMBER 2019)			NE	NE	**0.005**	**0.00005**	**0.03**	NE	NE	NE	NE	**0.07**	NE	**0.025**	**0.007**	NE	NE	NE	NE	NE	NE
40 CFR 141.62 MCL			NE	NE	0.005	0.00005	NE	NE	NE	NE	NE	0.07	NE	NE	0.007	NE	NE	NE	NE	NE	NE
NMED Tap Water (Rev 2. JUN 2019)			NE	NE	0.0017	0.0000747	0.00165	**0.0114**	**0.035**	**0.00134**	**14.06**	0.0365	NE	0.0275	0.284	**0.447**	NE	NE	NE	NE	NE
EPA RSL for Tap Water (NOV 2019)			**0.056**	**0.06**	0.0017	0.0000075	0.00017	0.011	0.036	0.00013	14	0.036	**0.25**	0.028	0.28	0.45	NE	**1**	**0.66**	**2**	**0.69**
Well ID	**DATE SAMPLED**	**METHOD**																			
NAPIS-2	10/21/19	8260B	<0.001	<0.001	<0.001		0.017	0.025	0.0038	<0.001	<0.001	<0.001	<0.001	<0.001	<0.001	0.0066		0.00053	0.0028	0.0021	0.00034
	08/22/19	8270/8260B	0.00032	<0.001	<0.001		0.015	0.024	0.0048	*<0.003**	0.0041	<0.001	<0.001	<0.001	<0.001	0.0091		0.0016	0.0047	0.0024	0.00049
	05/28/19	8270/8260B/8011/504.1	0.00026	<0.001	<0.001		0.011	0.02	0.0018	*<0.003**	<0.01	<0.001	<0.001	<0.001	<0.001	0.0083		0.00051	0.0035	0.0019	0.00029
	04/09/19	8270/8260B	NA	NA	NA					NA	NA	NA	NA	NA	NA	NA		NA	NA	NA	NA
	04/30/18	8260B	0.0084	0.0002	<0.001					<0.001	0.0097	<0.001	<0.001	0.00052	<0.001	0.0037		0.00059	0.0037	0.0012	0.00025
	02/09/18	8260B	0.0005	0.00015	<0.001					<0.001	0.0081	<0.001	<0.001	<0.001	<0.001	0.0033		0.00058	0.003	0.0011	0.00032
	12/04/17	8260B	0.00019		<0.001					<0.001	0.0059	<0.001	<0.001	0.00053	<0.001	0.0039		0.00043	0.0038	0.0014	0.00018
	09/05/17	8260B	0.00023		<0.001					<0.001	0.0073	<0.001	<0.001	<0.001	<0.001	0.0034		0.00047	0.0035	0.0011	0.00018
	06/01/17	8260B	<0.001		<0.001					<0.001	<0.01	<0.001	<0.001	0.00046	0.00022	0.0021		0.00014	0.0012	0.00098	0.0002
	02/21/17	8260B	<0.001		<0.001					<0.001	0.0066	0.00014	<0.001	0.00024	<0.001	0.00074		0.00025	0.0006	0.00046	0.00025
	11/14/16	8260B	0.00018							0.00023	0.0071	<0.001	0.0005	<0.001	<0.001	0.00033		0.00048	0.0006	0.00055	0.00031
	09/01/16	8260B	<0.001								0.015	<0.001		0.00023	<0.001	0.00042		0.00017	0.00026	0.00036	0.00024
	06/07/16	8260B	0.00015								0.012	0.00028		0.00034	<0.001	0.0011		0.0004	0.00091	0.0054	
	03/01/16	8260B	<0.001									<0.001		<0.001	<0.001	<0.001		<0.003	<0.001	<0.001	
	10/28/15	8260B	<0.001											<0.001		<0.001		<0.003	<0.001	<0.001	
	08/11/15	8270C/8260B	<0.001											<0.001		<0.001		<0.003	<0.001	<0.001	
	06/02/15	8270C	NA											NA		NA		NA	NA	NA	
	03/10/15	8270C	NA											NA		NA		NA	NA	NA	
	11/01/14	8270C	NA											NA		NA		NA	NA	NA	
	09/11/14	8270C/8260B	<0.001											<0.001		0.0011		<0.003	0.0017	<0.001	
	06/05/14	8270C	NA											NA		NA		NA	NA	NA	
	03/10/14	8270C	NA											NA		NA		NA	NA	NA	
	11/12/13	8270C	NA											NA		NA		NA	NA	NA	
	11/12/13	8270C	NA											NA		NA		NA	NA	NA	
	09/03/13	8270C/8260B	0.0017											<0.001		0.0028		<0.003	0.0022	0.0015	
	06/12/13	8270C/8260B												NA		NA		NA	NA	NA	
	03/18/13	8270C/8260B												NA		NA		NA	NA	NA	
	12/05/12 [1]	8270C/8260B												NA		NA		NA	NA	NA	
	08/21/12	8270C/8260B												<0.005		<0.005		<0.015	<0.005	<0.005	
	06/12/12	8270C												NA		NA		NA	NA	NA	
	03/20/12	8270C												NA		NA		NA	NA	NA	
	12/14/11	8270C												NA		NA		NA	NA	NA	
	09/27/11	8270C												NA		NA		NA	NA	NA	
	06/15/11	8270C/8260B												0.005		<0.005		<0.005	<0.005	<0.005	
	03/02/11	8270C												NA		NA		NA	NA	NA	
	11/02/10	8270C												NA		NA		NA	NA	NA	
	09/15/10	8270C												NA		NA		NA	NA	NA	
	06/10/10	8310												NA		NA		NA	NA	NA	
	03/08/10	8270C/8260B												0.0028		0.0028		0.0014	0.0042	0.002	

8.8.5 NAPIS-1, NAPIS-2, NAPIS-3, KA-3
Volatile and Semi-Volatile Organic Compound Analytical Result Summary

			PARAMETERS																		
STANDARDS			1,2,4-Trimethyl benzene (mg/L)	1,3,5-Trimethyl benzene (mg/L)	1,2-Dichloro ethane (EDC) (mg/L)	1,2-Dibro methane (EDB) (mg/L)	Naphthalene (mg/L)	1-Methyl naphthalene (mg/L)	2-Methyl naphthalene (mg/L)	Bromodichloro methane (mg/L)	Acetone (mg/L)	cis-1,2-DCE (mg/L)	4-Chloro toluene (mg/L)	1,1-Dichloro ethane (mg/L)	1,1-Dichloro ethene (mg/L)	Isopropyl benzene (mg/L)	4-Isopropyl toluene (mg/L)	n-Butyl benzene (mg/L)	n-Propyl benzene (mg/L)	sec-Butyl benzene (mg/L)	tert-Butyl benzene (mg/L)
WQCC 20NMAC 6.2.3103 (DECEMBER 2019)			NE	NE	**0.005**	**0.00005**	**0.03**	NE	NE	NE	NE	**0.07**	NE	**0.025**	**0.007**	NE	NE	NE	NE	NE	NE
40 CFR 141.62 MCL			NE	NE	0.005	0.00005	NE	NE	NE	NE	NE	0.07	NE	NE	0.007	NE	NE	NE	NE	NE	NE
NMED Tap Water (Rev 2. JUN 2019)			NE	NE	0.0017	0.0000747	0.00165	**0.0114**	**0.035**	**0.00134**	**14.06**	0.0365	NE	0.0275	0.284	**0.447**	NE	NE	NE	NE	NE
EPA RSL for Tap Water (NOV 2019)			**0.056**	**0.06**	0.0017	0.0000075	0.00017	0.011	0.036	0.00013	14	0.036	**0.25**	0.028	0.28	0.45	NE	**1**	**0.66**	**2**	**0.69**
Well ID	**DATE SAMPLED**	**METHOD**																			
NAPIS-3	10/21/19	8260B/8011/504.1	0.0019	0.00068	<0.001	<0.0000094	<0.002	<0.004	<0.004		<0.01	<0.001		<0.001	<0.001	<0.001		<0.003	<0.001	<0.001	<0.001
	08/22/19	8270C/8260B	<0.001	<0.001	*<0.001**	<0.001	<0.002	0.0011	0.0011		0.0024	<0.001		<0.001	<0.001	<0.001		<0.003	<0.001	<0.001	<0.001
	05/28/19	8270C/8260B	<0.001	<0.001	<0.001	<0.0000094	<0.002	<0.004	<0.004		0.011	<0.001		<0.001	<0.001	<0.001		<0.003	<0.001	<0.001	<0.001
	04/09/19	8270/8260B	NA	NA	NA						NA	NA		NA	NA	NA		NA	NA	NA	NA
	04/30/18	8260B	0.0019	0.00068	<0.001						0.0032	<0.001		<0.001	<0.001	0.00078		<0.003	0.00037	0.00021	<0.001
	02/09/18	8260B	0.00016		<0.001						<0.01	<0.001		<0.001	<0.001	<0.001		<0.001	<0.001	<0.001	<0.001
	12/04/17	8260B	<0.001		<0.001						0.0029	<0.001		<0.001	<0.001	<0.001		<0.003	<0.001	<0.001	<0.001
	09/05/17	8260B	<0.001		<0.001						0.0039	<0.001		<0.001	<0.001	<0.001		<0.003	<0.001	<0.001	<0.001
	06/02/17	8260B	<0.001		<0.001						0.0042	<0.001		<0.001	<0.001	<0.001		<0.003	<0.001	0.00045	<0.001
	02/21/17	8260B	<0.001		<0.001						<0.01	<0.001		<0.001	<0.001	<0.001		<0.003	<0.001	<0.001	<0.001
	11/14/16	8260B	0.00025		0.00034						<0.01	<0.001		<0.001	<0.001	<0.001		<0.003	<0.001	<0.001	<0.001
	09/01/16	8260B	<0.001								0.011	<0.001		<0.001	<0.001	<0.001		<0.003	<0.001	<0.001	<0.001
	06/07/16	8260B	<0.001								<0.01	<0.001		<0.001	<0.001	<0.001		<0.003	<0.001	<0.001	<0.001
	03/01/16	8260B	<0.001									0.00011		0.00047	0.00016	0.00085		0.00021	0.001	0.00039	<0.001
	10/28/15	8260B																			
	08/11/15	8270C/8260B																			
	06/02/15	8270C																			
	03/10/15	8270C																			
	11/13/14	8270C																			
	09/14/15	8270C																			
	06/05/14	8270C																			
	03/10/14	8270C																			
	11/12/13	8270C																			
	09/03/13	8270C/8260B																			
	06/12/13	8270C																			
	03/18/13	8270C																			
	12/5/2012	8270C																			
	10/02/12	8270C																			
	06/12/12	8270C																			
	03/20/12	8270C																			
	12/14/11	8270C																			
	09/27/11	8270C																			
	06/15/11	8270C/8260B																			
	03/02/11	8270C																			
	11/02/10	8270C																			
	09/15/10	8270C																			
	06/10/10	8310																			
	03/08/10	8270C/8260B																			

8.8.5 NAPIS-1, NAPIS-2, NAPIS-3, KA-3
Volatile and Semi-Volatile Organic Compound Analytical Result Summary

			PARAMETERS																		
STANDARDS			1,2,4-Trimethyl benzene (mg/L)	1,3,5-Trimethyl benzene (mg/L)	1,2-Dichloro ethane (EDC) (mg/L)	1,2-Dibro methane (EDB) (mg/L)	Naphthalene (mg/L)	1-Methyl naphthalene (mg/L)	2-Methyl naphthalene (mg/L)	Bromodichloro methane (mg/L)	Acetone (mg/L)	cis-1,2-DCE (mg/L)	4-Chloro toluene (mg/L)	1,1-Dichloro ethane (mg/L)	1,1-Dichloro ethene (mg/L)	Isopropyl benzene (mg/L)	4-Isopropyl toluene (mg/L)	n-Butyl benzene (mg/L)	n-Propyl benzene (mg/L)	sec-Butyl benzene (mg/L)	tert-Butyl benzene (mg/L)
WQCC 20NMAC 6.2.3103 (DECEMBER 2019)			NE	NE	**0.005**	**0.00005**	**0.03**	NE	NE	NE	NE	**0.07**	NE	**0.025**	**0.007**	NE	NE	NE	NE	NE	NE
40 CFR 141.62 MCL			NE	NE	0.005	0.00005	NE	NE	NE	NE	NE	0.07	NE	NE	0.007	NE	NE	NE	NE	NE	NE
NMED Tap Water (Rev 2. JUN 2019)			NE	NE	0.0017	0.0000747	0.00165	**0.0114**	**0.035**	**0.00134**	**14.06**	0.0365	NE	0.0275	0.284	**0.447**	NE	NE	NE	NE	NE
EPA RSL for Tap Water (NOV 2019)			**0.056**	**0.06**	0.0017	0.0000075	0.00017	0.011	0.036	0.00013	14	0.036	**0.25**	0.028	0.28	0.45	NE	**1**	**0.66**	**2**	**0.69**
Well ID	**DATE SAMPLED**	**METHOD**																			
KA-3	10/21/19	8260B	<0.001	<0.001	<0.001		0.0023	0.0027	0.0012	<0.001	<0.01	<0.001	<0.001			0.00057	<0.001	<0.003	0.00048	<0.001	<0.001
	08/22/19	8270C/8260B	<0.001	<0.001	<0.001		0.015	0.019	0.011	<0.001	0.0039	<0.001	<0.001			0.0048	<0.001	0.0012	0.004	0.0011	0.0004
	05/28/19	8270C	0.00032	<0.001	<0.001		0.0057	0.0056	0.0022	<0.001	0.0055	<0.001	<0.001			0.0013	<0.001	<0.003	0.00091	<0.001	<0.001
	04/09/19	8270/8260B	NA	NA	NA					NA	NA	NA	NA			NA	NA	NA	NA	NA	NA
	04/30/18	8260B	0.011	0.0031	<0.001					*<0.01**	0.0059	<0.001	<0.001			0.0044	0.00014	0.0003	0.0032	0.00049	0.00016
	02/09/18	8260B	0.00022		<0.001					<0.001	<0.01	<0.001	<0.001			0.0002		<0.003	0.00021	0.00013	0.00016
	12/04/17	8260B	<0.001		<0.001					<0.001	0.003	<0.001	<0.001			0.00016		<0.003	0.00015	<0.001	<0.001
	09/05/17	8260B	<0.001		<0.001					<0.001	0.0052	<0.001	<0.001			0.00006		<0.003	<0.001	<0.001	<0.001
	06/01/17	8260B	<0.001		<0.001					<0.001	0.0057	<0.001	<0.001			<0.001		<0.003	<0.001	0.00046	<0.001
	02/21/17	8260B	<0.001		<0.001					<0.001	<0.01	0.00016	<0.001			0.00093		<0.003	0.00073	0.00036	0.00019
	11/14/16	8260B	<0.001								0.0054	0.00018				0.00011		<0.003	0.00025	0.00036	0.00026
	09/01/16	8260B	<0.001								0.0097	<0.001				0.00025		<0.003	0.00026	0.00018	0.0002
	06/07/16	8260B	0.00012								<0.01	0.00016				0.00017		<0.003	<0.001	<0.001	0.00023
	03/03/16	8260B	<0.001									0.00011				0.00016		<0.003	<0.001	<0.001	
	10/28/15	8260B																			
	08/11/15	8270C/8260B																			
	06/02/15	8270C																			
	03/10/15	8270C																			
	11/11/14	8270C																			
	09/11/14	8270C																			
	06/05/14	8270C																			
	03/10/14	8270C																			
	11/12/13	8270C																			
	09/03/13	8270C/8260B																			
	06/12/13	8270C																			
	03/18/13	8270C																			
	12/05/12 [1]	8270C/8260B																			
	08/21/12	8270C/8260B																			
	06/12/12	8270C																			
	03/20/12	8270C																			
	12/14/11	8270C																			
	09/27/11	8270C																			
	06/15/11	8270C/8260B																			
	03/02/11	8270C																			
	11/02/10	8270C																			
	09/15/10	8270C/8260B																			
	06/10/10	8310																			
	03/08/10	8270C/8260B																			

DEFINITIONS
NA = Not analyzed; NE = Not established
Bold and highlighted values represent values above the applicable standards

STANDARDS
WQCC 20 NMAC 6.2.3103 - Standards for Ground Water of 10,000 mg/l TDS Concentration or Less.
a) Human Health Standards; b) Other Standards for Domestic Water
40 CFR 141.62 Detection Limits for Inorganic Contaminants
EPA Regional Screening Level (RSL) Summary Table
NMED Risk Assessment Guidance for Investigations and Remediations Table A-1
NOTES
Wells marked in red were not sampled because SPH was present in the well or H2S was detected in area
Items notes with a * and italics have a detection limit greater than or equal to the applicable standard.

8.9 OAPIS-1

BTEX and MTBE Analytical Result Summary

STANDARDS			PARAMETERS				
			Benzene (mg/L)	Toluene (mg/L)	Ethylbenzene (mg/L)	Total Xylenes (mg/L)	MTBE (mg/L)
WQCC 20 NMAC 6.2.3103 (DEC 2018)			**0.05**	**1**	**0.7**	**0.62**	**0.1**
40 CFR 141.61 MCL			0.005	1	0.7	10	NE
NMED TAP WATER (JUNE 2019)			0.00455	1.09	0.0149	0.193	0.143
EPA RSL TAP WATER (NOVEMBER 2019)			0.00046	1.1	0.0015	0.19	0.14
WELL ID	DATE SAMPLED	METHOD					
OAPIS-1	10/21/19	8260B	**0.17**	0.0015	0.021	0.0074	**0.25**
	08/22/19	8260B	**0.21**	0.0021	0.032	0.012	**0.29**
	05/08/19	8260B	**0.11**	0.0095	0.014	0.0065	**0.25**
	03/25/19	8260B	**0.077**	<0.002	0.01	0.004	**0.2**
	11/19/18	8260B	**0.17**	0.0011	0.017	0.0071	**0.29**
	09/06/18	8260B	**0.11**	0.0008	0.0096	0.005	**0.25**
	04/30/18	8260B	**0.068**	0.00066	0.0063	0.0032	**0.26**
	02/09/18	8260B	**0.068**	0.00016	0.0049	0.0029	**0.24**
	09/05/17	8260B	**0.23**	0.0018	0.027	0.0087	**0.27**
	06/01/17	8260B	**0.2**	0.0019	0.026	0.0096	**0.25**
	02/21/17	8260B	**0.12**	<0.01	0.01	<0.015	**0.28**
	11/14/16	8260B	**0.15**	0.0016	0.018	<0.015	**0.26**
	09/01/16	8260B	**0.18**	0.0015	0.023	0.0092	**0.24**
	06/07/16	8260B	**0.15**	0.0014	0.018	0.0083	**0.24**
	03/01/16	8260B	**0.076**	0.0006	0.0098	0.0037	**0.26**
	10/29/15	8260B	**0.13**	<0.01	0.016	<0.015	**0.26**
	08/11/15	8260B	**0.14**	<0.005	0.015	<0.0075	**0.29**
	06/02/15	8260B	**0.09**	<0.001	0.009	0.0043	**0.28**
	03/10/15	8260B	**0.065**	<0.005	0.0054	<0.0075	**0.29**
	11/11/14	8260B	**0.15**	<0.005	0.01	<0.0075	**0.4**
	09/12/14	8260B	**0.12**	<0.005	0.013	<0.0075	**0.32**
	06/05/14	8260B	**0.096**	<0.002	0.01	0.0049	**0.36**
	03/10/14	8260B	**0.07**	<0.001	0.0068	0.0033	**0.45**
	11/11/13	8260B	**0.089**	<0.001	0.01	0.0029	**0.43**
	09/03/13	8260B	**0.081**	<0.005	0.012	<0.0075	**0.42**
	06/12/13	8260B	**0.071**	<0.002	0.01	0.0033	**0.51**
	03/18/13	8260B	**0.027**	<0.005	<0.005	0.0075	**0.42**

DEFINITIONS

NA = Not analyzed; NE = Not established

Bold and highlighted values represent values above the applicable standards

STANDARDS

WQCC 20 NMAC 6.2.3103 - Standards for Ground Water of 10,000 mg/l TDS Concentration or Less.

a) Human Health Standards; b) Other Standards for Domestic Water

40 CFR 141.61 Maximum Contaminant Levels for Organic Contaminants

NMED Risk Assessment Guidance for Investigations and Remediations Table A-1

EPA Regional Screening Level (RSL) Summary Table

8.9.1 OAPIS-1

General Chemistry and DRO/GRO/MRO Analytical Result Summary

			PARAMETERS							
STANDARDS			Fluoride (mg/L)	Chloride (mg/L)	Nitrite (mg/L)	Nitrate (mg/L)	Sulfate (mg/L)	DRO (mg/L)	GRO (mg/L)	MRO (mg/L)
WQCC 20 NMAC 6.2.3103 (DEC 2018)			**1.6**	**250.0**	**1**	**10**	**600.0**	NE	NE	NE
40 CFR 141.62 MCL			4.0	NE	1	10	NE	NE	NE	NE
NMED TAP WATER (JUNE 2019)			1.18	NE	1.97	31.60	NE	NE	NE	NE
EPA RSL TAP WATER (NOVEMBER 2019)			0.8	NE	2	32	NE	NE	NE	NE
NMED SSG (JUNE 2019)			NE	NE	NE	NE	NE	**0.0167**	**0.0101**	**0.0858**
WELL ID	DATE SAMPLED	METHOD								
OAPIS-1	10/21/19	300.0/8015D	**1.6**	**1400**	<0.5	<0.5	4.4	**1.4**	**0.85**	*<2.5**
	08/22/19	300.0/8015D	1	**1500**	<0.5	<0.5	4.8	**12**	**0.97**	*<5.0**
	05/08/19	300.0/8015D	**1.6**	**1600**	<0.5	<0.5	8.5	**11**	**0.76**	*<5.0**
	03/28/19	300.0/8015D	1.3	**1500**	*<1.0**	<1.0	8.1	**11**	**0.68**	*<5.0**
	11/19/18	300.0/8015D	**1.7**	**1500**	<0.5	<0.5	5.1	**9.9**	**0.65**	*<5.0**
	09/06/18	300.0/8015D	**1.9**	**1400**	*<2.0**	<2.0	4.8	**9.8**	**0.71**	*<5.0**
	04/30/18	300.0/8015D	1.4	**1500**	*<1.0**	<1.0	12	**8.9**	**0.46**	*<5.0**
	02/09/18	300.0/8015D	1.6	**1700**	*<1.0**	<1.0	10	**6.9**	**0.62**	*<5.0**
	12/04/17	300.0/8015D	1.5	**1800**	*<1.0**	<1.0	9.2	**10**	**1**	*<5.0**
	09/05/17	300.0/8015D	1.2	**1600**	*<1.0**	<1.0	8.7	**10**	**1.4**	*<5.0**
	06/01/17	300.0/8015D	1.3	**1500**	*<1.0**	<1.0	9.4	**9.3**	**1.3**	*<5.0**
	02/21/17	300.0/8015D	**1.9**	**1400**	*<1.0**	<1.0	14	**12**	**0.92**	*<5.0**
	11/14/16	300.0/8015D	1.3	**1600**	*<2.0**	<2.0	13	**8.6**	**1.4**	*<5.0**
	09/01/16	300.0/8015D	1.2	**1900**	<0.5	<0.5	14	**9.5**	**1.7**	*<5.0**
	03/07/16	300.0/8015D	1.6	**1800**	*<1.0**	<1.0	19	**5.2**	**1.2**	*<5.0**
	03/01/16	300.0/8015D	**2**	**1700**	*<2.0**	<2.0	23	**6.1**	**0.86**	*<5.0**
	10/29/15	300.0/8015D	1.6	**1800**	*<1.0**	<1.0	18	**7.1**	**0.8**	*<5.0**
	08/11/15	300.0/8015D	1.4	**2000**	*<1.0**	<1.0	20	**3.7**	**0.86**	*<5.0**
	06/03/15	300.0/8015D	**1.9**	**1800**	*<2.0**	<2.0	26	**4.4**	NA	*<5.0**
	03/10/15	300.0/8015D	1.4	**1800**	<0.5	<0.5	30	**6.5**	**0.56**	*<5.0**
	11/11/14	300.0/8015D	**1.9**	**1700**	*<2.0**	<2.0	23	**9.2**	**0.79**	*<5.0**
	09/12/14	300.0/8015D	**14.2**	**1700**	*<1.0**	<1.0	22	**6.8**	**0.75**	*<5.0**
	06/05/14	300.0/8015D	1.3	**1400**	*<2.0**	<2.0	22	**11**	**0.7**	*<5.0**
	03/10/14	300.0/8015D	**1.7**	**1700**	*<1.0**	<1.0	37	**6.4**	**0.71**	*<5.0**
	11/11/13	300.0/8015D	**2**	**1600**	**5.4**	5.4	38	**23**	**0.81**	NA
	09/03/13	300.0/8015D	1.6	**1800**	*<1.0**	<1.0	38	**10**	**0.73**	**7.5**
	06/12/13	300.0/8015D	1.6	**1800**	*<1.0**	<1.0	41	**7.1**	**0.94**	*<5.0**
	03/18/13	300.0/8015D	**1.8**	**1600**	*<2.0**	<2.0	65	**6**	**0.48**	*<5.0**

DEFINITIONS

NA = Not analyzed; NE = Not established

Bold and highlighted values represent values above the applicable standards

STANDARDS

WQCC 20 NMAC 6.2.3103 - Standards for Ground Water of 10,000 mg/l TDS Concentration or Less.

a) Human Health Standards; b) Other Standards for Domestic Water

40 CFR 141.62 Maximum Contaminant Levels for Inorganic Contaminants

NMED Risk Assessment Guidance for Investigations and Remediations Table A-1

EPA Regional Screening Level (RSL) Summary Table

NMED Soil Screening Guidance Volume 1, Table 6-4 (groundwater)

NOTES

Items notes with a * and italics have a detection limit greater than or equal to the applicable standard.

8.9.2 OAPIS-1

Total Metals Analytical Result Summary

STANDARDS			PARAMETERS											
			Arsenic (mg/L)	Barium (mg/L)	Chromium (mg/L)	Copper (mg/L)	Iron (mg/L)	Lead (mg/L)	Manganese (mg/L)	Selenium (mg/L)	Mercury (ug/L)	Uranium (mg/L)	Zinc (mg/L)	Cyanide (mg/L)
WQCC 20NMAC 6.2.3103 (DECEMBER 2018)			**0.01**	**2**	**0.05**	**1**	**1**	**0.015**	**0.2**	**0.05**	**0.002**	**0.03**	**10.0**	**0.2**
40 CFR 141.62 MCL			0.01	2.0	0.1	1.3	NE	0.015	NE	0.05	2	0.03	NE	0.2
NMED TAP WATER (JUNE 2019)			0.000855	3.28	0.0057	0.7898	13.8	NE	2.02	0.0987	0.626	0.0592	5.96	0.00146
EPA RSL TAP WATER (NOVEMBER 2019)			0.000052	3.8	22	0.8	14	0.015	0.43	0.1	0.63	0.004	6	0.0015
WELL ID	**DATE SAMPLED**	**METHOD**												
OAPIS-1	10/21/19	200.7/200.8	**0.011**	1.5	0.0078	0.019	**8.8**	0.01	**1.8**	<0.005	<0.2	NA	0.037	0.0719
	08/22/19	200.7/200.8	0.0089	1.1	<0.03	<0.03	**7.9**	0.0065	**1.7**	<0.005	0.12	0.0051	<0.05	0.0658
	05/08/19	200.7/200.8	0.008	1.1	<0.006	<0.006	**4.6**	0.002	**1.8**	0.0019	<0.2	0.015	0.0093	0.0794
	03/28/19	200.7/200.8	0.0071	1.1	0.0016	<0.006	**5.6**	0.0061	**1.6**	<0.005	<0.2	0.012	0.014	0.0818
	11/19/18	200.7/200.8	0.0096	1.1	<0.03	<0.03	**6.9**	0.0064	**1.6**	0.0011	0.079	0.0099	0.019	0.09
	09/06/18	200.7/200.8	0.0091	1.3	<0.006	0.013	**1.8**	0.0091	**1.9**	<0.005	<0.2	0.029	0.041	0.052
	04/30/18	200.7/200.8	**0.011**	1.2	0.0086	0.034	**7.5**	0.013	**1.3**	<0.005	<0.2	**0.046**	0.053	0.0848
	02/09/18	200.7/200.8	**0.02**	1.2	0.0045	0.031	**5.8**	**0.016**	**1.3**	0.022	0.085	**0.074**	0.017	0.0451
	12/04/17	200.7/200.8	**0.018**	1.1	0.0026	0.0099	**2**	0.0065	**1.3**	*<0.05**	0.041	**0.05**	0.019	0.0746
	09/05/17	200.7/200.8	**0.019**	0.91	0.0050	0.01	**7.9**	0.011	**1.6**	0.037	<0.2	0.0097	0.027	0.0844
	06/01/17	200.7/200.8	**0.012**	0.99	0.0057	0.013	**8.8**	0.011	**2.1**	0.015	<0.2	0.014	0.039	0.111
	02/21/17	200.7/200.8	**0.021**	0.98	0.0056	0.0093	**5.8**	0.014	**1.6**	0.025	<0.2	NA	0.030	0.0745
	11/14/16	200.7/200.8	**0.014**	0.96	0.0028	0.0035	**8.3**	0.011	**1.8**	0.02	0.089	0.012	0.028	**0.504**
	09/01/16	200.7/200.8	**0.018**	0.89	0.0053	0.014	**9.1**	0.015	**1.9**	*<0.05**	NA	0.02	0.064	0.106
	03/07/16	200.7/200.8	**0.017**	0.77	<0.006	0.011	**9.2**	0.0055	**1.9**	0.024	0.02	0.014	0.015	0.093
	03/01/16	200.7/200.8	0.0097	0.72	<0.006	<0.006	**5.7**	0.0034	**1.7**	0.011	<0.2	0.016	0.016	0.0867
	10/29/15	200.7/200.8	**0.015**	0.75	<0.006	<0.006	**8.4**	0.015	**1.9**	0.022	<0.2	0.017	0.055	0.0684
	08/11/15	200.7/200.8	**0.012**	0.72	<0.006	<0.006	**8.4**	0.0077	**1.8**	0.018	<0.2	0.02	0.035	0.0796
	06/02/15	200.7/200.8	**0.012**	0.71	0.0086	<0.006	**7.5**	0.0071	**1.9**	0.018	<0.2	0.022	0.031	0.0887
	03/10/15	200.7/200.8	*<0.05**	0.66	<0.006	<0.006	**6.9**	0.0059	**1.7**	*<0.05**	<0.2	0.023	0.02	0.0804
	11/11/14	200.7/200.8	**0.016**	0.75	<0.006	<0.006	**8.4**	0.0073	**1.9**	0.03	<0.2	0.03	0.031	0.0587
	09/12/14	200.7/200.8	**0.018**	0.72	<0.006	<0.006	**7.9**	0.0051	**1.9**	0.035	<0.2	**0.031**	0.021	0.0908
	06/05/14	200.7/200.8	**0.016**	0.93	0.022	0.06	**12**	**0.029**	**2.4**	0.035	<0.2	**0.034**	0.15	0.0753
	03/10/14	200.7/200.8	**0.013**	0.71	0.011	0.025	**8.6**	**0.017**	**2.1**	0.026	<0.2	**0.039**	0.054	0.0846
	11/11/13	200.7/200.8	**0.013**	0.69	0.012	0.017	**12**	0.012	**2.1**	0.023	<0.2	**0.044**	0.063	0.0765
	09/03/13	200.7/200.8	**0.012**	0.7	0.012	0.015	**8.5**	0.0091	**2**	0.018	<0.2	**0.045**	0.06	0.087
	06/12/13	200.7/200.8	**0.012**	0.75	0.011	0.024	**10**	NL	**2.4**	0.022	<0.2	**0.049**	0.058	0.0689
	3/18/2013	200.7/200.8	0.0082	0.61	0.01	0.026	**7.9**	0.0085	**2.1**	0.0075	<0.2	**0.065**	0.062	NA

DEFINITIONS

NA = Not analyzed; NE = Not established

Bold and highlighted values represent values above the applicable standards

STANDARDS

WQCC 20 NMAC 6.2.3103 - Standards for Ground Water of 10,000 mg/l TDS Concentration or Less.

a) Human Health Standards; b) Other Standards for Domestic Water

40 CFR 141.62 Maximum Contaminant Levels for Inorganic Contaminants

NMED Risk Assessment Guidance for Investigations and Remediations Table A-1

EPA Regional Screening Level (RSL) Summary Table

NOTES

Items notes with a * and italics have a detection limit greater than or equal to the applicable standard.

8.9.3 OAPIS-1

Dissolved Metals Analytical Result Summary

			PARAMETERS											
STANDARDS			Arsenic (mg/L)	Barium (mg/L)	Cadmium (mg/L)	Chromium (mg/L)	Copper (mg/L)	Iron (mg/L)	Lead (mg/L)	Manganese (mg/L)	Selenium (mg/L)	Silver (mg/L)	Uranium (mg/L)	Zinc (mg/L)
WQCC 20NMAC 6.2.3103 (DECEMBER 2018)			**0.01**	**2**	**0.005**	**0.05**	**1**	**1**	**0.015**	**0.2**	**0.05**	**0.05**	**0.03**	**10**
40 CFR 141.62 MCL			0.01	2	0.005	0.1	1.3	NE	0.015	NE	0.05	NE	0.03	NE
NMED TAP WATER (JUNE 2019)			0.000855	3.28	0.00624	0.0057	0.7898	13.8	NE	2.02	0.0987	0.0812	0.0592	5.96
EPA RSL TAP WATER (NOVEMBER 2019)			0.000052	3.8	0.0092	22	0.8	14	0.015	0.43	0.1	0.094	0.004	6
WELL ID	DATE SAMPLED	METHOD												
OAPIS-1	10/21/19	200.7/200.8	0.009	1.3	<0.002	<0.006	<0.006	**3.2**	0.00045	**1.5**	0.0016	0.0033	NA	0.034
	08/22/19	200.7/200.8	0.0076	1	<0.002	<0.03	0.0068	**6**	0.00041	**1.6**	0.0012	<0.025	0.0051	<0.05
	05/08/19	200.7/200.8	0.0068	1.1	<0.002	<0.006	<0.006	**5.2**	0.0014	**1.8**	0.0016	0.0029	0.016	0.012
	03/28/19	200.7/200.8	0.0067	1.1	<0.002	<0.006	<0.006	**4.2**	0.00044	**1.7**	0.0013	0.0024	0.011	0.045
	11/19/18	200.7/200.8	0.0083	0.99	<0.002	<0.006	<0.006	**6.2**	0.00059	**1.7**	0.001	<0.025	0.0058	0.032
	09/06/18	200.7/200.8	0.008	1.1	<0.002	<0.006	<0.006	0.88	0.0038	**1.5**	<0.005	0.0042	**0.041**	0.035
	04/30/18	200.7/200.8	0.0091	0.93	<0.002	<0.006	0.0038	0.98	0.0043	**1.1**	<0.005	0.002	**0.047**	0.019
	02/09/18	200.7/200.8	**0.016**	0.98	<0.002	<0.006	0.0036	**1.3**	0.0029	**1.4**	0.019	0.0019	**0.038**	0.017
	12/04/17	200.7/200.8	**0.015**	1.1	<0.002	<0.006	<0.006	**3**	0.00068	**1.6**	0.02	0.0023	0.021	0.012
	09/05/17	200.7/200.8	**0.014**	0.89	<0.002	0.0031	<0.006	**6**	<0.0025	**1.6**	0.028	<0.005	0.0096	0.035
	06/01/17	200.7/200.8	**0.011**	0.92	<0.002	<0.006	<0.006	**6.4**	<0.0025	**1.7**	0.016	<0.005	0.013	0.014
	02/21/17	200.7/200.8	**0.013**	0.95	<0.002	<0.006	<0.006	**4.8**	<0.0025	**1.7**	0.022	<0.005	NA	0.029
	11/14/16	200.7/200.8	**0.017**	0.87	<0.002	<0.006	<0.006	**7.4**	0.00081	**1.8**	0.033	<0.005	0.014	0.0071
	09/01/16	200.7/200.8	**0.016**	0.85	<0.002	<0.006	<0.006	**7.5**	0.00099	**1.8**	0.025	<0.005	0.015	0.0059
	06/07/16	200.7/200.8	**0.014**	0.8	<0.002	<0.006	<0.006	**7.2**	<0.005	**2**	0.024	<0.005	0.013	0.0047
	03/01/16	200.7/200.8	0.01	0.62	<0.002	<0.006	<0.006	**4.6**	0.00092	**1.6**	0.014	<0.005	0.015	0.024
	10/29/15	200.7/200.8	**0.017**	0.72	<0.002	<0.006	<0.006	**5.2**	<0.0025	**1.8**	0.034	<0.005	0.015	<0.01
	08/11/15	200.7/200.8	**0.012**	0.59	<0.002	0.0069	<0.006	**4.7**	<0.0025	**1.7**	0.021	<0.005	0.019	0.18
	06/02/15	200.7/200.8	**0.012**	0.56	<0.002	<0.006	<0.006	**3.2**	<0.01	**1.7**	0.017	<0.005	0.021	0.015
	03/10/15	200.7/200.8	*<0.02**	0.63	<0.002	<0.006	<0.006	**4.9**	<0.001	**1.8**	*<0.05**	<0.005	0.02	0.019
	11/11/14	200.7/200.8	*<0.02**	0.68	<0.002	<0.006	<0.006	**7.6**	<0.001	**1.8**	0.022	<0.005	0.022	0.029
	09/12/14	200.7/200.8	**0.018**	0.78	<0.002	<0.006	<0.006	**7.2**	<0.001	**1.8**	0.034	<0.005	0.029	0.021
	06/05/14	200.7/200.8	**0.011**	0.8	<0.002	0.0082	0.025	**10**	**0.02**	**2.2**	0.014	<0.005	**0.039**	0.1
	03/10/14	200.7/200.8	0.0083	0.61	<0.002	<0.006	<0.006	**5.4**	0.0079	**2**	0.0084	<0.005	**0.039**	0.046
	11/11/13	200.7/200.8	**0.013**	0.59	<0.002	<0.006	<0.006	**6.4**	0.0014	**2.1**	0.026	<0.025	**0.042**	0.056
	09/03/13	200.7/200.8	**0.012**	0.55	<0.002	<0.006	<0.006	**5.2**	<0.005	**2**	0.023	<0.005	**0.047**	0.05
	06/12/13	200.7/200.8	**0.013**	0.65	<0.002	<0.006	<0.006	**6.2**	0.0018	**2.7**	0.03	<0.025	**0.053**	0.038
	03/18/13	200.7/200.8	0.0074	0.44	<0.002	<0.006	<0.006	**1.8**	0.0063	**1.9**	0.0094	<0.005	**0.062**	0.046

DEFINITIONS

NA = Not analyzed; NE = Not established

Bold and highlighted values represent values above the applicable standards

STANDARDS

WQCC 20 NMAC 6.2.3103 - Standards for Ground Water of 10,000 mg/l TDS Concentration or Less.

a) Human Health Standards; b) Other Standards for Domestic Water

40 CFR 141.62 Maximum Contaminant Levels for Inorganic Contaminants

NMED Risk Assessment Guidance for Investigations and Remediations Table A-1

EPA Regional Screening Level (RSL) Summary Table

NOTES

Items notes with a * and italics have a detection limit greater than or equal to the applicable standard.

8.9.4 OAPIS-1

Volatile Organic Compounds Analytical Result Summary

			PARAMETERS																
		STANDARDS	1,2,4-Trimethyl benzene (mg/L)	1,3,5-Trimethyl benzene (mg/L)	1,2-Dichloro ethane (EDC) (mg/L)	1,2-Dibromo ethane (EDB) (mg/L)	Naphthalene (mg/L)	1-Methyl naphthalene (mg/L)	2-Methyl naphthalene (mg/L)	Acetone (mg/L)	*(Methyl ethyl ketone)* 2-Butanone (mg/L)	1,1-Dichloro ethane (mg/L)	Isopropyl benzene (mg/L)	4-Isopropyl toluene (mg/L)	4-Methyl-2-pentanone (mg/L)	Methylene Chloride (mg/L)	n-Butyl benzene (mg/L)	n-Propyl benzene (mg/L)	sec-Butyl benzene (mg/L)
		WQCC 20 NMAC 6.2.3103 (DEC 2018)	NE	NE	**0.005**	**0.00005**	**0.03**	NE	NE	NE	NE	**0.025**	NE	NE	NE	**0.005**	NE	NE	NE
		40 CFR 141.61 MCL	NE	NE	0.005	0.00005	NE	NE	NE	NE	NE	NE	NE	NE	NE	0.005	NE	NE	NE
		NMED TAP WATER (MAR 2019)	NE	NE	0.0017	0.0000747	0.00165	**0.0114**	**0.035**	**14.06**	**5.56**	0.0275	**0.447**	NE	**1.24**	0.1180	NE	NE	NE
		EPA RSL for Tap Water (NOV 2018)	**0.056**	**0.06**	0.0017	0.0000075	0.00017	0.0011	0.036	14	5.6	0.0028	0.45	NE	6.3	0.011	**1**	**0.66**	**2**
WELL ID	**DATE SAMPLED**	**METHOD**																	
OAPIS-1	10/21/19	8260B/8011/504.1	0.0094	<0.001	0.00053	<0.0000093	0.0019	**0.049**	<0.004	<0.01	<0.01	0.0011	0.002	0.00067	<0.01	<0.003	<0.003	0.0025	0.00042
	08/22/19	8260B	0.019	<0.001	<0.001	*<0.001**	0.0043	**0.083**	<0.004	0.029	0.0065	0.0015	0.0035	0.0012	<0.01	<0.003	0.0015	0.0044	0.00088
	05/08/19	8260B	0.0054	<0.002	<0.002	<0.0000093	0.0045	**0.054**	<0.008	<0.02	<0.02	0.0011	0.0013	0.00053	<0.02	*<0.006**	<0.006	0.0015	<0.002
	03/28/19	8260B	0.0061	<0.002	0.00066	*<0.002**	0.0082	**0.02**	0.0036	0.014	<0.02	0.0011	0.00099	<0.002	<0.02	*<0.006**	<0.006	0.0013	<0.002
	11/19/18	8260B	0.0089	<0.002	<0.002	*<0.002**	0.0024	**0.053**	<0.008	0.025	<0.02	0.0013	0.0021	0.00067	<0.02	*<0.006**	<0.006	0.0027	0.0005
	09/06/18	8260B	0.0045	<0.001	0.0004	<0.0000094	0.0013	**0.015**	<0.004	0.043	<0.01	0.001	0.001	0.00035	0.0015	<0.003	0.00027	0.001	0.00022
	04/30/18	8260B	0.0016	<0.001	<0.001	*<0.001**	0.00074	0.0047	0.00036	0.056	0.0044	0.0011	0.00073	0.00033	<0.01	<0.003	0.00021	0.00076	0.00018
	02/09/18	8260B	0.00068	<0.002	<0.002	*<0.002**	<0.004	0.0016	<0.008	0.041	<0.02	0.0011	0.00068	0.00034	<0.02	0.00047	<0.006	0.00054	0.00023
	12/04/17	8260B	0.0049	<0.005	*<0.005**	*<0.005**	<0.01	**0.02**	<0.02	0.038	<0.05	<0.005	0.0014	<0.005	<0.05		<0.015	0.0013	<0.005
`	09/05/17	8260B	0.016	<0.005	*<0.005**	*<0.005**	0.0034	**0.066**	0.0012	0.013	<0.05	<0.005	0.0032	0.00091	<0.05		0.00098	0.0042	0.0006
	06/01/17	8260B	0.02	<0.005	*<0.005**	*<0.005**	0.007	**0.067**	<0.02	<0.05	<0.05	0.0022	0.003	0.00059	<0.05		<0.015	0.0041	0.0026
	02/21/17	8260B	0.0037	<0.01	*<0.01**	*<0.01**	0.002	**0.016**	*<0.04**	<0.1	<0.1	<0.01	0.0016	<0.01	<0.1		<0.03	0.0015	<0.01
	11/14/16	8260B	0.012	<0.01	0.0032	*<0.01**	0.0033	**0.023**	<0.01	<0.1	<0.1	<0.01	0.0027	<0.01	<0.1		0.0031	0.0044	0.0025
	09/01/16	8260B	0.012	<0.005	*<0.005**	*<0.005**	0.003	**0.071**	<0.02	0.031	<0.05	0.0014	0.0031	0.00099	<0.05		0.001	0.004	<0.005
	06/07/16	8260B	0.012	0.00015	<0.001	*<0.001**	0.0075	**0.074**	0.00044	0.025	0.0037	0.0013	0.0026	0.00084	<0.01		0.00078	0.0033	0.00063
	03/01/16	8260B	0.00028	<0.001	**0.0062**		0.0014	**0.013**	<0.004	0.034	0.0055	0.0012	0.0014	0.00038	0.0019		0.00027	0.0015	0.00033
	10/29/15	8260B	<0.01	<0.01			<0.02	*<0.04**	*<0.04**	<0.1		<0.01	<0.01				<0.03	<0.01	
	08/11/15	8260B	0.0062	<0.005			<0.01	**0.021**	<0.02	<0.05		<0.005	<0.005				<0.015	<0.005	
	06/02/15	8260B	0.0051	<0.001			0.0024	**0.03**	*<0.04**	0.028		<0.001	0.0014				<0.003	0.0018	
	03/10/15	8260B	<0.005	<0.005			<0.01	*<0.02**	<0.02	<0.05		<0.005	<0.005				<0.015	<0.005	
	11/11/14	8260B	<0.005	<0.005			<0.01	**0.032**	<0.02	<0.05		<0.005	<0.005				<0.015	<0.005	
	09/12/14	8260B	<0.005	<0.005			<0.01	**0.03**	<0.02	<0.05		<0.005	<0.005				<0.015	<0.005	
	06/05/14	8260B	0.0066	<0.002			<0.004	**0.03**	<0.008	<0.02		<0.002	0.0022				<0.006	0.0023	
	03/10/14	8260B	0.0025	<0.001			<0.002	**0.013**	<0.004	0.016		<0.001	0.0015				<0.003	0.0016	
	11/11/13	8260B	0.0016	<0.001			<0.002	**0.014**	<0.004	<0.01		0.0011	0.0025				<0.003	0.0025	
	09/03/13	8260B	<0.005	<0.005			<0.01	*<0.02**	<0.02	<0.05		<0.005	<0.005				<0.015	<0.005	
	06/12/13	8260B	0.002	<0.002			<0.004	**0.014**	<0.008	<0.02		<0.002	0.0022				<0.006	0.0023	

DEFINITIONS

NA = Not analyzed; NE = Not established

Bold and highlighted values represent values above the applicable standards

STANDARDS

WQCC 20 NMAC 6.2.3103 - Standards for Ground Water of 10,000 mg/l TDS Concentration or Less.

a) Human Health Standards; b) Other Standards for Domestic Water

40 CFR 141.61 Maximum Contaminant Levels for Organic Contaminants

NMED Risk Assessment Guidance for Investigations and Remediations Table A-1

EPA Regional Screening Level (RSL) Summary Table

NOTES

Items notes with a * and italics have a detection limit greater than or equal to the applicable standard.

8.9.5 OAPIS-1

Semi-Volatile Organic Compounds Analytical Result Summary

			PARAMETERS												
STANDARDS			Acenapthene (mg/L)	Anthracene (mg/L)	Benzoic Acid (mg/L)	Bis(2-ethylhexyl) phthalate (mg/L)	Di-n-octyl phthalate (mg/L)	Dimethyl phthalate (mg/L)	2,4-Dimethyl phenol (mg/L)	1,4-Dioxane (mg/L)	Fluorene (mg/L)	Naphthalene (mg/L)	1-Methyl naphthalene (mg/L)	Phenanthrene (mg/L)	Phenol (mg/L)
WQCC 20 NMAC 6.2.3103 (DECEMBER 2018)			NE	NE	NE	NE	NE	NE	NE	NE	NE	**0.03**	NE	NE	**0.005**
40 CFR 141.61 MCL			NE	NE	NE	**0.006**	NE	NE	NE	NE	NE	NE	NE	NE	NE
NMED TAP WATER (JUNE 2019)			**0.535**	**1.72**	NE	0.0556	NE	**0.612**	**0.354**	**0.0046**	**0.288**	0.00165	**0.0114**	**0.17**	5.76
EPA RSL TAP WATER (NOVEMBER 2019)			0.53	1.8	**75**	0.0056	**0.2**	NE	0.36	0.0046	0.29	0.00017	0.011	NE	5.8
WELL ID	**DATE SAMPLED**	**METHOD**													
OAPIS-1	10/21/19	8270D/8310	0.00249	0.00011	<0.005	**0.09**	<0.05	<0.05	<0.05	0.0035	0.00239	0.00329	0.00578	0.0003	*<0.05**
	08/22/19	8270C			<0.02	*<0.01**	<0.01	<0.01	0.023			0.0056	**0.073**		*<0.01**
	05/08/19	8270C			<0.1	**0.031**	<0.05	<0.05	0.027				**0.03**		*<0.05**
	03/28/19	8270C			<0.02	*<0.01**	<0.01	<0.01	0.014				0.011		*<0.01**
	11/19/18	8270C			<0.1	**0.09**	<0.05	<0.05	<0.05						*<0.05**
	09/06/18	8270C			0.034	*<0.05**	<0.05	<0.05	<0.05						*<0.05**
	04/30/18	8270C			0.092	*<0.05**	<0.05	<0.05	<0.05						*<0.05**
	02/09/18	8270C			0.0083	*<0.01**	<0.01	<0.01	0.012						0.0041
	12/04/17	8270C			0.024	**0.044**	<0.05	<0.05	0.034						*<0.05**
`	09/05/17	8270C			<0.2	*<0.1**	<0.1	<0.1	0.032						*<0.1**
	06/01/17	8270C			0.0069	**0.01**	<0.01	<0.01	0.0073						*<0.01**
	02/21/17	8270C			<0.02	**0.0078**	<0.01	<0.01	0.013						*<0.01**
	11/14/16	8270C			0.0085	*<0.01**	0.0071	0.006	0.011						*<0.1**
	09/01/16	8270C				0.0033	0.0033		0.006						*<0.01**
	06/07/16	8270C				**0.019**	0.025		0.028						*<0.05**
	03/01/16	8270C							0.007						*<0.01**
	10/29/15	8270C							<0.1						*<0.1**
	08/11/15	8270C							0.024						*<0.01**
	06/02/15	8270C							0.029						*<0.01**
	03/10/15	8270C							<0.01						*<0.01**
	11/11/14	8270C							<0.05						*<0.05**
	09/12/14	8270C							0.028						*<0.01**
	06/05/14	8270C							0.032						*<0.01**
	03/10/14	8270C							<0.01						*<0.01**
	11/11/13	8270C							<0.01						*<0.01**
	09/03/13	8270C							0.022						*<0.01**
	06/12/13	8270C							0.023						*<0.01**
	03/18/13	8270C													**0.01**

DEFINITIONS

NA = Not analyzed; NE = Not established

Bold and highlighted values represent values above the applicable standards

STANDARDS

WQCC 20 NMAC 6.2.3103 - Standards for Ground Water of 10,000 mg/l TDS Concentration or Less.

a) Human Health Standards; b) Other Standards for Domestic Water

40 CFR 141.61 Maximum Contaminant Levels for Organic Contaminants

NMED Risk Assessment Guidance for Investigations and Remediations Table A-1

EPA Regional Screening Level (RSL) Summary Table

NOTES

Items notes with a * and italics have a detection limit greater than or equal to the applicable standard.

8.10 LEAK DETECTION UNITS (East LDU, West LDU, Oil Sump LDU)
BTEX, MTBE and DRO/GRO/MRO Analytical Result Summary

STANDARDS			PARAMETERS							
			Benzene (mg/L)	Toluene (mg/L)	Ethyl-benzene (mg/L)	Total Xylenes (mg/L)	MTBE (mg/L)	DRO (mg/L)	GRO (mg/L)	MRO (mg/L)
WQCC 20 NMAC 6.2.3103 (DECEMBER 2018)			0.005	1	0.7	0.62	0.1	NE	NE	NE
40 CFR 141.61 MCL			0.005	1	0.7	10	NE	NE	NE	NE
NMED TAP WATER (JUNE 2019)			0.00455	1.09	0.0149	0.193	0.143	NE	NE	NE
EPA RSL TAP WATER (NOVEMBER 2019)			0.0046	1.1	0.0015	0.19	0.14	NE	NE	NE
NMED SSG (JUNE 2019)			NA	NE	NE	NE	NE	0.0167	0.0101	0.0858
SAMPLE ID	DATE SAMPLED	METHOD								
East LDU [3]	11/19/19	8260B/8015D	1.3	0.36	0.082	0.21	<0.005	1.1	5.2	<2.5*
	08/22/19	8260B/8015D	0.6	0.15	0.057	0.15	0.0024	2.8	2.2	<5.0*
	05/28/19	8021B/8015D	0.89	0.072	0.091	0.056	NA	2.4	2.4	<5.0*
	04/09/19	8260B/8015D	1.5	0.028	0.15	0.027	0.0012	3	3.5	<5.0*
	04/30/18	8260B/8015D	0.71	0.037	0.26	0.6	<0.01	4.2	5.1	<5.0*
	02/12/18	8260B/8015D	1.9	0.047	0.29	0.08	<0.0024	4.5	7.9	<5.0*
	12/04/17	8260B/8015D	1.7	0.06	0.18	0.18	<0.005	4.4	7.6	<5.0*
	09/05/17	8260B/8015D	0.53	0.23	0.19	0.9	<0.01	6.9	5.5	<5.0*
	06/02/17	8260B/8015D	0.17	0.0066	0.063	0.075	0.0025	7.1	2	<5.0*
	02/21/17	8260B/8015D	0.23	0.14	0.14	0.3	0.013	27	4.4	<5.0*
	11/17/16	8260B/8015D	0.11	0.0082	0.1	0.0098	0.0063	16	1.6	<5.0*
	06/07/16	8260B/8015D	0.36	0.032	0.025	0.097	0.013	16	4.9	<5.0*
	03/01/16	8260B/8015D	0.41	0.03	0.27	0.14	0.011	21	5.6	<5.0*
	10/29/15	8260B/8015D	0.56	0.044	0.25	1.1	0.022	24	5.5	<5.0*
	08/11/15	8260B/8015D	1.2	1.1	0.34	1.7	<0.02	19	15	<5.0*
	06/03/15	8260B/8015D	1.2	1	0.43	2	<0.02	17	0.54	<5.0*
	03/10/15	8021B/8015D	1.3	0.46	0.47	1.9	<0.05	26	9.4	<5.0*
	11/11/14	8021B/8015B	1.7	4.8	0.72	8.2	<0.5*	17	38	NL
	09/11/14		Not Sampled							
	06/03/14	8021B/8015B	8.9	21	2.3	19	<0.5*	29	130	<5.0*
	03/10/14	8021B/8015B	9.8	27	3.8	25	<0.5*	310	200	<50*
	11/12/13	8021B/8015B	0.19	0.17	0.13	5.6	<0.5*	410	32	NA
	06/12/13	8021B/8015B	9.4	2.2	0.51	6.1	<0.5*	18	38	<5.0*
	03/18/13	8021B/8015B	12	4.6	0.61	7	<0.5*	28	50	<5.0*
	11/28/12	8021B/8015B	1.1	0.89	0.51	6.7	<0.25*	19	27	<5.0*
	08/21/12	8021B/8015B	1.2	0.33	0.46	5.7	<0.25*	10	17	<5.0*
	06/12/12	8021B/8015B	1.3	1.1	0.46	6.3	<0.25*	27	24	<5.0*
	03/20/12	8021B/8015B	1.4	3.1	0.56	8	<0.5*	30	31	<5.0*
East LDU [3] (continued)	12/14/11	8021B/8015B	1.8	4.2	0.56	6.7	<0.25*	33	33	<5.0*
	09/26/11	8021B/8015B	2.8	7.2	0.68	7	<0.13*	34	43	<50*
	06/15/11	8260B/8015B	1.8	0.28	0.32	3.8	<0.02	27	13	<5.0*
	03/03/11	8021B/8015B	2.6	7.2	0.45	3.9	<0.5*	35	83	<5.0*
	11/11/10	8021B/8015B	10	28	1.3	9	<0.05	63	100	
	09/20/10	8021B/8015B	10	20	1.1	8.1	<0.13*	120	100	
	03/18/10	8021B/8015B	9.1	17	1.4	9.9	NL	16000	120	
West LDU [2]	11/19/19	8260B/8015D	0.0023	<0.001	<0.001	<0.0015	0.0027	2.3	0.13	<2.5*
	08/22/19	8260B/8015D	0.00098	<0.001	0.00023	0.011	0.0369	6.7	0.32	<5.0*
	05/28/19	8021B/8015D	0.0085	<0.002	0.004	0.0023	NA	7.8	0.32	<5.0*
	04/09/19	8260B/8015D	0.16	<0.002	0.02	0.0024	0.0029	7.4	0.57	<5.0*
	04/30/18	8260B/8015D	2.7	0.016	0.072	0.035	<0.01	9.4	5.8	<5.0*
	02/12/18	8260B/8015D	1.4	0.13	0.042	0.074	0.0056	7.6	5	<5.0*
	12/04/17	8260B/8015D	0.063	0.0018	0.033	0.0026	0.0018	7.7	1.2	<5.0*
	09/05/17	8260B/8015D	0.088	0.0012	0.015	0.0051	0.0033	9.8	0.76	<5.0*
	06/02/17	8260B/8015D	0.093	0.0041	0.015	0.016	0.0025	8.5	1.1	<5.0*
	02/21/17	8260B/8015D	0.29	0.024	0.032	0.06	0.0098	14	2.6	<5.0*
	11/17/16	8260B/8015D	0.14	0.015	0.038	0.024	<0.01	8.6	2.2	<5.0*
	06/07/16	8260B/8015D	0.41	0.049	0.05	0.14	0.0032	7.3	3.6	<5.0*
	03/01/16	8260B/8015D	0.26	0.053	0.027	0.047	<0.02	7.2	1.9	<5.0*
	10/29/15	8260B/8015D	0.5	0.19	0.03	0.29	<0.01	12	3	<5.0*
	08/11/15	8260B/8015D	2.7	0.74	0.083	0.44	<0.02	9.9	11	<5.0*
	06/03/15		Insufficient water volume - Did not sample							
	03/10/15	8021B/8015D	0.45	0.086	0.085	0.2	<0.012	12	2.7	<5.0*
	11/11/14		Insufficient water volume - Did not sample							
	09/11/14	8021B/8015B	0.87	0.3	0.11	0.94	<0.12*	6.6	6.7	<5.0*
	06/03/14	8021B/8015B	0.52	0.035	0.18	2.8	<0.05	8	12	<5.0*
	03/10/14	8021B/8015B	0.7	0.14	0.17	3.3	<0.25*	14	13	<5.0*

8.10 LEAK DETECTION UNITS (East LDU, West LDU, Oil Sump LDU)
BTEX, MTBE and DRO/GRO/MRO Analytical Result Summary

STANDARDS			PARAMETERS							
			Benzene (mg/L)	Toluene (mg/L)	Ethyl-benzene (mg/L)	Total Xylenes (mg/L)	MTBE (mg/L)	DRO (mg/L)	GRO (mg/L)	MRO (mg/L)
WQCC 20 NMAC 6.2.3103 (DECEMBER 2018)			**0.005**	**1**	**0.7**	**0.62**	**0.1**	NE	NE	NE
40 CFR 141.61 MCL			0.005	1	0.7	10	NE	NE	NE	NE
NMED TAP WATER (JUNE 2019)			0.00455	1.09	0.0149	0.193	0.143	NE	NE	NE
EPA RSL TAP WATER (NOVEMBER 2019)			0.0046	1.1	0.0015	0.19	0.14	NE	NE	NE
NMED SSG (JUNE 2019)			NA	NE	NE	NE	NE	**0.0167**	**0.0101**	**0.0858**
SAMPLE ID	**DATE SAMPLED**	**METHOD**								
West LDU [2]	11/12/13	8021B/8015B	**2.8**	**3.7**	0.31	**6**	*<0.25**	**17**	**30**	NA
(continued)	09/05/13	8021B/8015B	**1.5**	**3.1**	0.28	**7.8**	*<0.25**	**110**	**47**	*<50**
	06/12/13	8021B/8015B	**6**	**3**	0.49	**5.2**	*<0.25**	**4.7**	**31**	*<5.0**
	03/18/13	8021B/8015B	**3.9**	0.42	0.38	**4**	*<0.25**	**2.6**	**20**	*<5.0**
	11/28/12	8021B/8015B	**2**	**1.9**	0.57	**5.1**	*<0.25**	**5.7**	**25**	*<5.0**
	08/21/12	8021B/8015B	**1.8**	**3.2**	0.66	**3.1**	*<0.25**	**4**	**18**	*<5.0**
	06/12/12	8021B/8015B	**1.4**	**3.5**	0.41	**5.7**	*<0.25**	**9**	**27**	*<5.0**
	03/20/12	8021B/8015B	**1.6**	**6**	0.69	**7.6**	<0.012	**6.9**	**42**	*<5.0**
	12/14/11	8021B/8015B	**2.3**	**8.3**	**0.83**	**7.2**	*<0.25**	**22**	**45**	*<5.0**
	09/26/11	8021B/8015B	**3.6**	**9.3**	0.59	**5.5**	<0.025	**14**	**45**	*<5.0**
	06/15/11	8260B/8015B	**0.094**	0.33	0.029	0.26	<0.01	**13**	**2.2**	*<5.0**
	03/03/11	8021B/8015B	**6.1**	**17**	**0.92**	**7.9**	*<0.5**	**15**	**40**	*<5.0**
	11/11/10	8021B/8015B	**7**	**18**	**0.9**	**6.1**	<0.001	**16**	**67**	
	09/20/10	8021B/8015B	**3.1**	**5.8**	0.36	**2.9**	<0.0025	**9**	**26**	
	03/18/10	8021B/8015B	**2.7**	**4.2**	0.19	**1.4**	NL	**16**	**24**	
Oil Sump LDU [1]	mid-2013-2017		Insufficient water volume - Did not sample							
	06/12/13	8021B/8015B	**4.5**	**9.5**	**0.72**	**6.3**	*<0.5**	**17**	**42**	*<5.0**
	03/18/13	8021B/8015B	**5.1**	**8.8**	**0.71**	**5.5**	*<0.5**	**20**	**40**	*<5.0**
	11/28/12	8021B/8015B	**2.7**	**6.6**	0.57	**5.4**	*<0.5**	**13**	**37**	*<5.0**
	08/21/12	8021B/8015B	**1.8**	**6**	0.59	**5.5**	*<0.5**	**8.8**	**28**	*<5.0**
	06/12/12	8021B/8015B	**2.1**	**6.2**	0.59	**5.1**	*<0.5**	**18**	**36**	*<5.0**
	03/20/12	8021B/8015B	**2**	**8.1**	**0.89**	**6.9**	*<0.5**	**42**	**45**	*<5.0**
	12/14/11	8021B/8015B	**3.4**	**7.5**	**0.76**	**7.4**	*<0.5**	**14**	**52**	*<5.0**
	09/26/11	8021B/8015B	**3.5**	**10**	**0.76**	**6.4**	*<0.5**	**18**	**49**	*<50**
	06/15/11	8260B/8015B	**3**	**7.1**	0.48	**3.9**	*<0.2**	**20**	**38**	*<5.0**
	03/03/11	8021B/8015B	**5.6**	**13**	**1.2**	**7.9**	*<0.5**	**680**	**120**	*<15**
	11/11/10	8021B/8015B	**8.8**	**19**	**1.6**	**10**	*<0.2**	**390**	**110**	
Oil Sump LDU [1]	09/20/10	8021B/8015B	**9.4**	**29**	**6.1**	**40**	*<0.5**	**1400**	**650**	
	03/18/10	8021B/8015B	**5.6**	**33**	**6.4**	**38**	*<0.95**	**35**	**69**	

DEFINITIONS
NA = Not analyzed ; NE = Not Established
Bold and highlighted values represent values above the applicable standards
STANDARDS
WQCC 20 NMAC 6.2.3103 - Standards for Ground Water of 10,000 mg/l TDS Concentration or Less.
a) Human Health Standards; b) Other Standards for Domestic Water
40 CFR 141.61 Maximum Contaminant Levels for Organic Contaminants
NMED Risk Assessment Guidance for Investigations and Remediations Table A-1
EPA Regional Screening Level (RSL) Summary Table
NMED Soil Screening Guidance Volume 1, Table 6-4 (groundwater)
NOTES
Wells marked in red were not sampled because the well was dry
Items notes with a * and italics have a detection limit greater than or equal to the applicable standard.
1) Oil Sump LDU - Dry - 2013 Third and fourth Quarters. 2014, 2015, 2016 and 2017 - dry.
2) West LDU - 2014 - fourth quarter - not enough water to collect samples (West bay out of service). 2015 - Second Quarter - not enough water to collect samples.

3) East LDU - No samples collected third quarter 2014.

8.10.1 LEAK DETECTION UNITS (East LDU, West LDU, Oil Sump LDU)
Total Metals Analytical Result Summary

			PARAMETERS											
STANDARDS			Arsenic (mg/L)	Barium (mg/L)	Cadmium (mg/L)	Chromium (mg/L)	Copper (mg/L)	Iron (mg/L)	Lead (mg/L)	Manganese (mg/L)	Selenium (mg/L)	Mercury (ug/L)	Uranium (mg/L)	Zinc (mg/L)
WQCC 20 NMAC 6.2.3103 (DECEMBER 2018)			**0.01**	**2.0**	**0.005**	**0.05**	**1.0**	**1.0**	**0.015**	**0.2**	**0.05**	**2**	**0.03**	**10**
40 CFR 141.62 MCL			0.01	2.0	0.005	0.1	1.3	NE	0.015	NE	0.05	2	0.03	NE
NMED TAP WATER (JUNE 2019)			0.000855	3.28	0.00624	0.0057	0.7898	13.8	NE	2.02	0.0987	0.626	0.0592	5.96
EPA RSL TAP WATER (NOVEMBER 2019)			0.000052	3.8	0.0092	22	0.8	14	0.015	0.43	0.1	0.63000	0.004	6
SAMPLE ID	DATE SAMPLED	METHOD												
East LDU [3]	11/19/19	200.7/200.8	0.00110	0.38	<0.002	0.05	<0.006	0.2	<0.0005	0.11	<0.001	<0.2	<0.0005	0.071
	08/22/19	200.7/200.8	0.00046	0.38	<0.002	0.05	<0.006	0.2	0.00015	0.11	<0.001	0.13	0.00012	0.0073
	05/28/19	200.7/200.8	<0.001	0.12	<0.002	**0.094**	<0.006	**1.3**	<0.0005	**0.79**	<0.001	<0.2	<0.0005	<0.01
	04/09/19	200.7/200.8	0.00032	0.11	<0.002	**0.093**	<0.006	0.12	0.00022	**0.25**	<0.001	NA	0.00021	0.013
	04/30/18	200.7/200.8	<0.001	0.38	<0.002	0.05	<0.006	0.2	<0.0005	0.11	<0.001	<0.2	<0.0005	0.02
	02/12/18	200.7/200.8	<0.001	0.22	<0.0002	**0.087**	0.0043	0.97	0.00035	**0.54**	<0.001	NA	<0.0005	0.027
	12/04/17	200.7/200.8	0.00099	0.43	<0.002	**0.069**	<0.006	**1.3**	0.00048	**0.25**	<0.001	<0.2	<0.0005	0.041
	09/05/17	200.7/200.8	0.00036	0.32	<0.002	**0.054**	0.0018	0.23	0.00021	0.058	<0.005	<0.2	<0.0005	0.015
	06/02/17	200.7/200.8	0.00036	0.23	<0.002	0.05	0.0024	0.32	0.00027	0.13	<0.001	<0.2	<0.0005	0.013
	02/21/17	200.7/200.8	0.0049	0.13	<0.002	**1.2**	0.039	**84**	0.0018	**14**	0.0025	0.22	NA	0.063
	11/17/16	200.7/200.8	0.0033	0.097	<0.002	**0.53**	0.0097	**55**	0.0027	**16**	0.0023	0.28	<0.0025	0.74
	06/07/16	200.7/200.8	0.0053	0.16	<0.002	**0.57**	0.015	**3.8**	0.0011	**3.6**	0.0017	0.16	0.00062	0.088
	03/01/16	200.7/200.8	0.0046	0.13	<0.002	**0.47**	<0.006	**1.5**	0.00026	**8.0**	0.0013	0.065	0.00048	0.056
	10/29/15	200.7/200.8	0.0052	0.21	<0.002	**0.74**	<0.006	0.051	<0.005	**3.3**	0.0029	<0.2	<0.005	<0.01
	08/11/15	200.7/200.8	*<0.05**	0.31	<0.002	**0.95**	<0.006	0.29	*<0.025**	**2.7**	*<0.05**	<0.2	<0.025	0.016
	06/03/15	200.7/200.8	0.0089	0.34	<0.002	**0.94**	<0.006	0.84	*<0.025**	**3.0**	<0.005	<0.2	<0.0025	<0.01
	03/10/15	200.7/200.8	0.0047	0.16	<0.002	**0.85**	<0.006	**3.0**	<0.001	**6.5**	0.0024	<0.2	0.0013	0.054
	11/11/14	200.7/200.8	0.0015	0.12	<0.002	**0.22**	<0.006	**19**	<0.001	**5.4**	<0.001	<0.2	<0.001	0.18
	09/11/14		Not Sampled											
	06/03/14	200.7/200.8	**0.019**	0.33	<0.002	**0.54**	<0.006	**1.1**	<0.005	**1.5**	<0.005	<2	<0.005	0.027
	03/10/14	200.7/200.8	0.0093	0.2	<0.002	**0.71**	<0.006	**4.4**	<0.005	**3.1**	<0.005	0.22	<0.005	0.12
	11/12/13	200.7/200.8	**0.012**	0.35	*<0.01**	**0.44**	<0.03	0.32	<0.005	**0.26**	0.0063	<2	<0.005	<0.05
	06/12/13	200.7/200.8	0.007	0.56	<0.002	**0.72**	<0.006	0.091	<0.005	**0.56**	0.0081	<2	<0.005	<0.01
	03/18/13	200.7/200.8	0.0059	0.48	<0.002	**0.76**	<0.006	0.09	<0.005	**0.62**	0.0027	<2	<0.0025	<0.01
	11/28/12	200.7/200.8	0.0095	0.53	<0.002	**0.71**	<0.006	0.23	<0.005	**1.1**	0.0036	<2	<0.0025	<0.01
	08/21/12	200.7/200.8	0.0094	0.67	<0.002	**0.51**	<0.006	0.099	<0.005	**1.2**	*<0.05**	<2	<0.0025	<0.01
	06/12/12	200.7/200.8	0.0099	0.6	<0.002	**0.31**	<0.006	0.17	<0.005	**1.2**	0.0065	<1	<0.005	<0.01
	03/20/12	200.7/200.8	0.0032	0.44	<0.002	**0.11**	<0.006	**2.3**	<0.005	**0.58**	0.0026	<2	<0.0025	0.064
	12/14/11	200.7/200.8	0.0082	0.34	<0.002	**0.14**	<0.006	0.54	<0.005	**0.42**	<0.0025	<2	<0.0025	0.018
	09/26/11	200.7/200.8	0.0039	0.59	<0.002	**0.12**	<0.006	0.58	<0.005	**0.56**	<0.0025	<2	<0.0025	0.036
	06/15/11	200.7/200.8	**0.027**	0.94	<0.002	**0.14**	0.13	**31**	**0.047**	**1.3**	0.037	<2	<0.0025	3.3
	03/03/11	200.7/200.8	0.0058	0.48	<0.002	0.035	<0.006	0.57	<0.005	**0.39**	*<0.05**	<2	<0.0025	0.014
	11/11/10	6010B	*<0.1**	0.94	*<0.01**	**0.12**	<0.03	**1.1**	*<0.025**	**1.6**	*<0.25**	<2	<0.001	<0.1
	09/20/10	6010B	*<0.02**	0.54	<0.002	0.039	<0.006	**7.6**	<0.005	**0.8**	*<0.05**	<0.8	<0.005	0.21
	03/18/10	6010B	*<0.1**	1.3	*<0.01**	**0.25**	0.073	**24**	*<0.025**	**2.0**	*<0.25**	<0.8	<0.001	1.3

8.10.1 LEAK DETECTION UNITS (East LDU, West LDU, Oil Sump LDU)
Total Metals Analytical Result Summary

			PARAMETERS											
STANDARDS			Arsenic (mg/L)	Barium (mg/L)	Cadmium (mg/L)	Chromium (mg/L)	Copper (mg/L)	Iron (mg/L)	Lead (mg/L)	Manganese (mg/L)	Selenium (mg/L)	Mercury (ug/L)	Uranium (mg/L)	Zinc (mg/L)
WQCC 20 NMAC 6.2.3103 (DECEMBER 2018)			**0.01**	**2.0**	**0.005**	**0.05**	**1.0**	**1.0**	**0.015**	**0.2**	**0.05**	**2**	**0.03**	**10**
40 CFR 141.62 MCL			0.01	2.0	0.005	0.1	1.3	NE	0.015	NE	0.05	2	0.03	NE
NMED TAP WATER (JUNE 2019)			0.000855	3.28	0.00624	0.0057	0.7898	13.8	NE	2.02	0.0987	0.626	0.0592	5.96
EPA RSL TAP WATER (NOVEMBER 2019)			0.000052	3.8	0.0092	22	0.8	14	0.015	0.43	0.1	0.63000	0.004	6
SAMPLE ID	DATE SAMPLED	METHOD												
West LDU [2]	11/19/19	200.7/200.8	*<0.02**	0.062	<0.002	**0.15**	<0.006	**51**	<0.0025	**19**	<0.02	<2	0.00082	0.029
	08/22/19	200.7/200.8	0.00046	0.073	<0.002	**0.24**	<0.006	**38**	0.00047	**28**	<0.001	0.18	0.00062	0.029
	05/28/19	200.7/200.8	<0.005	0.071	*<0.01**	**0.7**	<0.03	**770**	0.0004	**76**	<0.005	<2	<0.0025	0.16
	04/09/19	200.7/200.8	<0.005	0.092	*<0.01**	**0.74**	<0.03	**1300**	0.00016	**77**	<0.005	NA	<0.0025	0.072
	04/30/18	200.7/200.8	0.0051	0.094	<0.002	**0.66**	<0.006	0.92	<0.0025	**1.4**	<0.005	0.097	0.00069	0.065
	02/12/18	200.7/200.8	0.0034	0.1	<0.002	**0.43**	0.0066	**1.5**	0.00085	**2.1**	0.003	NA	0.0013	0.095
	12/04/17	200.7/200.8	NA	NA	NA	NA	NA	NA	NA	NA	NA	NA	NA	NA
	09/05/17	200.7/200.8	0.0038	0.11	<0.002	**1.3**	<0.006	**26**	0.00048	**9.3**	<0.005	<2	<0.0025	0.056
	06/02/17	200.7/200.8	0.0028	0.11	<0.002	**0.35**	<0.006	**44**	0.00055	**16**	<0.005	0.071	0.0021	0.33
	02/21/17	200.7/200.8	0.0072	0.22	<0.002	**2.1**	<0.006	**1.4**	<0.0025	**2.6**	0.005	0.064	NA	0.014
	11/17/16	200.7/200.8	0.004	0.26	<0.002	**0.77**	<0.006	**3.3**	0.00083	**0.6**	0.0029	0.26	<0.0025	0.079
	06/07/16	200.7/200.8	0.0051	0.41	<0.002	**1.2**	<0.006	0.49	0.00043	**0.5**	0.003	0.095	0.00034	0.016
	03/01/16	200.7/200.8	0.0051	0.31	<0.002	**1.5**	<0.006	0.6	0.00022	**1.1**	0.0034	0.072	0.00066	0.018
	10/29/15	200.7/200.8	0.005	0.57	<0.002	**1.2**	<0.006	0.64	0.00055	**0.7**	<0.005	<2	0.00058	0.027
	08/11/15	200.7/200.8	*<0.02**	0.6	<0.002	**1.4**	<0.006	**1.9**	*<0.1**	**1.2**	<0.02	<2	<0.01	0.081
	06/03/15		Insufficient water volume - Did not sample											
	03/10/15	200.7/200.8	0.0046	0.43	<0.002	**0.76**	<0.006	**7.1**	0.0016	**3.3**	0.0046	<2	0.0012	0.21
	11/11/14		Insufficient water volume - Did not sample											
	06/03/14	200.7/200.8	<0.005	0.15	<0.002	**0.058**	<0.006	**16**	<0.005	**2.0**	<0.005	<2	<0.005	0.5
	03/10/14	200.7/200.8	<0.005	0.069	<0.002	**0.15**	<0.006	**9.0**	<0.001	**3.8**	<0.005	<2	<0.001	0.68
	11/12/13	200.7/200.8	0.0099	0.18	<0.002	**0.16**	<0.006	0.34	<0.005	**1.4**	0.014	<2	<0.005	0.032
	09/05/13	200.7/200.8	0.0088	0.23	<0.002	**0.32**	<0.006	**37**	<0.005	**2.0**	<0.02	<2	<0.005	1.1
	06/12/13	200.7/200.8	0.0053	0.22	<0.002	0.036	<0.006	0.31	<0.005	**0.29**	0.0097	<2	<0.005	<0.01
	03/18/13	200.7/200.8	0.0036	0.15	<0.002	0.046	<0.006	0.71	<0.005	**0.32**	<0.0025	<2	<0.0025	0.026
	11/28/12	200.7/200.8	0.0031	0.17	<0.002	**0.079**	<0.006	0.72	<0.005	**0.57**	<0.0025	<2	<0.0025	0.016
	08/21/12	200.7/200.8	<0.0025	0.4	<0.002	0.036	<0.006	0.26	<0.005	**0.22**	*<0.05**	<2	<0.0025	<0.01
	06/12/12	200.7/200.8	0.0038	0.36	<0.002	0.02	<0.006	0.16	<0.005	0.2	0.0049	<1	<0.0025	<0.01
	03/20/12	200.7/200.8	0.0028	0.21	<0.002	0.011	<0.006	**1.3**	<0.005	**0.22**	0.0035	<2	<0.0025	0.014
	12/14/11	200.7/200.8	**0.011**	1.4	<0.002	**0.082**	0.045	**9.1**	**0.016**	**0.34**	<0.005	**3.6**	<0.0025	0.87
	09/26/11	200.7/200.8	0.0041	0.23	<0.002	**0.072**	<0.006	**1.5**	<0.005	**0.89**	0.0048	0.27	<0.0025	0.064
	06/15/11	200.7/200.8	**0.012**	0.65	<0.002	**0.093**	<0.006	**1.3**	<0.005	**1.1**	0.025	<2	<0.0025	0.061
	03/03/11	200.7/200.8	0.0083	0.49	<0.002	**0.08**	<0.006	**4.1**	<0.005	**1.3**	*<0.05**	<2	<0.0025	0.067
	11/11/10	6010B	*<0.02**	0.5	<0.002	**0.15**	<0.006	0.66	<0.005	**0.68**	*<0.05**	<2	<0.001	<0.02
	09/20/10	6010B	*<0.02**	0.27	<0.002	**0.067**	<0.006	0.31	NL	**0.84**	*<0.05**	<2	*<0.05**	<0.02
	03/18/10	6010B	*<0.02**	0.2	<0.002	**2.4**	<0.006	**5.3**	<0.005	**3.1**	*<0.05**	<0.8	<0.001	<0.05

8.10.1 LEAK DETECTION UNITS (East LDU, West LDU, Oil Sump LDU)
Total Metals Analytical Result Summary

STANDARDS			PARAMETERS											
			Arsenic (mg/L)	Barium (mg/L)	Cadmium (mg/L)	Chromium (mg/L)	Copper (mg/L)	Iron (mg/L)	Lead (mg/L)	Manganese (mg/L)	Selenium (mg/L)	Mercury (ug/L)	Uranium (mg/L)	Zinc (mg/L)
WQCC 20 NMAC 6.2.3103 (DECEMBER 2018)			**0.01**	**2.0**	**0.005**	**0.05**	**1.0**	**1.0**	**0.015**	**0.2**	**0.05**	**2**	**0.03**	**10**
40 CFR 141.62 MCL			0.01	2.0	0.005	0.1	1.3	NE	0.015	NE	0.05	2	0.03	NE
NMED TAP WATER (JUNE 2019)			0.000855	3.28	0.00624	0.0057	0.7898	13.8	NE	2.02	0.0987	0.626	0.0592	5.96
EPA RSL TAP WATER (NOVEMBER 2019)			0.000052	3.8	0.0092	22	0.8	14	0.015	0.43	0.1	0.63000	0.004	6
SAMPLE ID	DATE SAMPLED	METHOD												
Oil Sump LDU [1]	mid-2013-2017		Insufficient water volume - Did not sample											
	06/12/13	200.7/200.8	**0.018**	0.43	<0.002	**0.12**	<0.006	0.42	<0.005	**1.1**	0.015	<2	<0.005	0.022
	03/18/13	200.7/200.8	**0.018**	0.33	<0.002	**0.11**	<0.006	0.61	<0.005	**1.1**	0.0049	<2	<0.0025	0.03
	11/28/12	200.7/200.8	**0.011**	0.34	<0.002	**0.085**	<0.006	0.8	<0.005	**1.1**	0.0046	<2	<0.0025	0.041
	08/21/12	200.7/200.8	**0.011**	0.45	<0.002	**0.069**	<0.006	0.86	<0.005	**1.1**	*<0.05**	<2	<0.0025	0.055
	06/12/12	200.7/200.8	**0.017**	0.56	<0.002	**0.052**	0.018	**5.8**	0.0086	**0.84**	0.0097	**3.1**	<0.005	0.43
	03/20/12	200.7/200.8	**0.02**	0.52	<0.002	0.048	0.0093	**4.5**	0.0065	**0.82**	0.012	1.7	<0.0025	0.22
	12/14/11	200.7/200.8	**0.012**	0.24	0.002	0.034	<0.006	0.59	<0.005	**0.37**	0.004	<2	<0.0025	0.018
	09/26/11	200.7/200.8	**0.031**	1.8	0.0022	**0.16**	0.62	**120**	**0.2**	**0.93**	0.0072	**7.7**	0.0026	**11**
	06/15/11	200.7/200.8	0.0065	0.5	*<0.01**	0.039	<0.03	0.38	*<0.025**	**0.35**	0.004	<2	<0.0025	<0.05
	03/03/11	200.7/200.8	0.0098	0.62	<0.002	**0.072**	<0.006	9.4	0.0056	**0.81**	*<0.05**	**2.4**	<0.0025	0.47
	11/10/10	6010B	*<0.1**	**7.2**	*<0.01**	**0.18**	0.25	**150**	**0.11**	**2.3**	*<0.25**	**1.7**	<0.004	7.9
	09/20/10	6010B	*<0.1**	**15**	*<0.01**	**0.23**	0.59	**130**	**0.24**	**1.6**	*<0.25**	**11**	0.016	**13**
	03/18/10	6010B	*<2.0**	*<2.0**	*<0.2**	**1.1**	**4.5**	NL	**1.7**	**3.3**	*<5.0**	*<4**	**0.0461**	**88**

DEFINITIONS
NA = Not analyzed ; NE = Not Established
Bold and highlighted values represent values above the applicable standards
STANDARDS
WQCC 20 NMAC 6.2.3103 - Standards for Ground Water of 10,000 mg/l TDS Concentration or Less.
a) Human Health Standards; b) Other Standards for Domestic Water
40 CFR 141.62 Maximum Contaminant Levels for Inorganic Contaminants
NMED Risk Assessment Guidance for Investigations and Remediations Table A-1
EPA Regional Screening Level (RSL) Summary Table
NOTES
Wells marked in red were not sampled because the well was dry
Items notes with a * and italics have a detection limit greater than or equal to the applicable standard.
1) Oil Sump LDU - Dry - 2013 Third and fourth Quarters. 2014, 2015, 2016 and 2017 - dry.
2) West LDU - 2014 - fourth quarter - not enough water to collect samples (West bay out of service). 2015 - Second Quarter - not enough water to collect samples.
3) East LDU - No samples collected third quarter 2014.

8.10.2 LEAK DETECTION UNITS (East LDU, West LDU, Oil Sump LDU)
Dissolved Metals Analytical Result Summary

			PARAMETERS											
STANDARDS			Arsenic (mg/L)	Barium (mg/L)	Cadmium (mg/L)	Chromium (mg/L)	Copper (mg/L)	Iron (mg/L)	Lead (mg/L)	Manganese (mg/L)	Selenium (mg/L)	Silver (mg/L)	Uranium (mg/L)	Zinc (mg/L)
WQCC 20 NMAC 6.2.3103 (DECEMBER 2018)			**0.01**	**2**	**0.005**	**0.05**	**1**	**1**	**0.015**	**0.2**	**0.05**	**0.05**	**0.03**	**10**
40 CFR 141.62 MCL			0.01	2	0.005	0.1	1.3	NE	0.015	NE	0.05	NE	0.03	NE
NMED TAP WATER (JUNE 2019)			0.000855	3.28	0.00624	0.0057	0.7898	13.8	NE	2.02	0.0987	0.0812	0.0592	5.96
EPA RSL TAP WATER (NOVEMBER 2019)			0.000052	3.8	0.0092	22	0.8	14	0.015	0.43	0.1	0.094	0.004	6
SAMPLE ID	DATE SAMPLED	METHOD												
East LDU [3]	11/19/19	200.7/200.8	0.00063	0.054	<0.002	**0.073**	<0.006	0.28	<0.0005	**0.33**	<0.001	0.0012	<0.0005	0.025
	08/22/19	200.7/200.8	0.00027	0.061	<0.002	**0.094**	<0.006	**4.8**	<0.0005	**0.95**	<0.001	<0.005	0.00011	0.0067
	05/28/19	200.7/200.8	<0.001	0.12	<0.002	**0.067**	<0.006	**1.3**	<0.0005	**0.83**	<0.001	0.00098	<0.0005	0.013
	04/09/19	200.7/200.8	<0.001	0.11	<0.002	0.028	<0.006	0.039	<0.0005	**0.28**	<0.001	0.0019	<0.0005	0.013
	04/30/18	200.7/200.8	<0.001	0.38	<0.002	0.02	<0.006	0.08	<0.0005	0.11	0.0024	<0.005	<0.0005	0.01
	02/12/18	200.7/200.8	<0.001	0.21	<0.002	0.048	<0.006	0.041	<0.0005	**0.53**	<0.001	<0.005	<0.0005	0.01
	12/04/17	200.7/200.8	<0.001	0.41	<0.002	0.019	<0.006	0.039	<0.0005	**0.25**	<0.001	<0.005	<0.0005	0.011
	09/05/17	200.7/200.8	0.00034	0.31	<0.002	0.013	<0.006	0.058	<0.0005	0.055	<0.001	<0.005	<0.0005	0.022
	06/02/17	200.7/200.8	0.00037	0.22	<0.002	0.026	<0.006	0.23	<0.0005	0.13	<0.001	<0.005	<0.0005	0.012
	02/21/17	200.7/200.8	0.0039	0.13	<0.002	**1.2**	<0.006	**91**	0.00069	**15**	0.0032	<0.005	NA	0.057
	11/17/16	200.7/200.8	0.0025	0.085	<0.002	**0.44**	<0.006	**47**	<0.0005	**16**	0.0022	<0.005	0.0001	0.018
	06/07/16	200.7/200.8	0.0038	0.15	<0.002	**0.44**	<0.006	0.36	<0.0025	**3.8**	0.002	<0.005	0.0049	0.011
	03/01/16	200.7/200.8	0.0048	0.12	<0.002	**0.41**	<0.006	0.099	<0.0025	**7.5**	0.0036	<0.005	0.00044	0.017
	10/29/15	200.7/200.8	0.0052	0.21	<0.002	**0.74**	<0.006	0.051	<0.005	**3.3**	0.0029	<0.005	<0.005	<0.01
	08/11/15	200.7/200.8	*<0.05**	0.29	<0.002	**0.88**	<0.006	0.026	*<0.05**	**2.8**	*<0.05**	<0.005	*<0.05**	<0.01
	06/03/15	200.7/200.8	*<0.01**	0.28	<0.002	**0.86**	<0.006	0.086	*<0.05**	**2.6**	0.044	<0.005	<0.01	<0.01
	03/10/15	200.7/200.8	0.0047	0.14	<0.002	**0.8**	<0.006	0.5	<0.001	**6.4**	0.0024	<0.005	0.0013	0.028
	11/11/14	200.7/200.8	0.0013	0.074	<0.002	**0.18**	<0.006	**1.4**	<0.001	**4.9**	<0.001	<0.005	<0.001	<0.01
	09/11/14		Not Sampled											
	06/03/14	200.7/200.8	**0.021**	0.32	<0.002	**0.52**	<0.006	0.025	<0.005	**1.5**	**0.056**	<0.005	<0.005	0.021
	03/10/14	200.7/200.8	*<0.01**	0.19	<0.002	**0.71**	<0.006	**2.9**	<0.01	**3**	**0.051**	<0.005	<0.01	0.11
	11/12/13	200.7/200.8	0.0097	0.34	<0.002	**0.44**	<0.006	0.08	<0.005	**0.25**	0.0078	<0.005	<0.005	0.019
	06/12/13	200.7/200.8	0.0063	0.56	<0.002	**0.69**	<0.006	0.049	<0.005	**0.56**	0.02	<0.005	<0.005	<0.01
	03/18/13	200.7/200.8	0.0063	0.45	<0.002	**0.77**	<0.006	0.047	0.0052	**0.62**	0.0056	<0.005	<0.001	<0.01
	11/28/12	200.7/200.8	0.01	0.51	<0.002	**0.69**	<0.006	0.055	<0.005	**1**	0.015	<0.005	<0.02	0.025
	08/21/12	200.7/200.8	0.0062	0.62	<0.002	**0.46**	<0.006	0.044	<0.005	**1.2**	*<0.05**	<0.005	<0.001	<0.01
	06/12/12	200.7/200.8	0.0051	0.59	<0.002	**0.28**	<0.006	0.062	<0.005	**1.1**	0.0092	<0.005	<0.005	0.011
	03/20/12	200.7/200.8	<0.005	0.42	<0.002	**0.11**	<0.006	0.9	<0.005	**0.6**	<0.005	<0.005	<0.005	0.035
	12/14/11	200.7/200.8	0.0035	0.31	<0.002	**0.12**	<0.006	0.21	<0.005	**0.39**	0.0018	<0.005	<0.001	<0.01
	09/26/11	200.7/200.8	0.0036	0.58	<0.002	**0.11**	<0.006	0.057	<0.005	**0.55**	0.0019	<0.005	<0.001	0.026
	06/15/11	200.7/200.8	**0.016**	0.11	*<0.01**	**0.11**	<0.03	**1.2**	*<0.025**	**1.2**	0.037	<0.025	<0.01	<0.05
	03/03/11	200.7/200.8	<0.005	0.48	<0.002	0.034	<0.006	0.11	<0.005	**0.38**	*<0.05**	<0.005	<0.005	<0.01
	11/11/10	6010B	*<0.02**	0.33	<0.002	0.046	<0.006	0.16	<0.005	**0.59**	*<0.05**	<0.005	<0.001	<0.05
	09/20/10	6010B	*<0.02**	0.31	<0.002	0.033	<0.006	0.14	<0.005	**0.73**	*<0.05**	<0.005	<0.005	<0.05
	03/18/10	6010B	*<0.04**	0.21	<0.004	**0.22**	<0.012	0.86	<0.01	**2**	*<0.1**	<0.01	<0.001	<0.1

8.10.2 LEAK DETECTION UNITS (East LDU, West LDU, Oil Sump LDU)
Dissolved Metals Analytical Result Summary

			PARAMETERS											
STANDARDS			Arsenic (mg/L)	Barium (mg/L)	Cadmium (mg/L)	Chromium (mg/L)	Copper (mg/L)	Iron (mg/L)	Lead (mg/L)	Manganese (mg/L)	Selenium (mg/L)	Silver (mg/L)	Uranium (mg/L)	Zinc (mg/L)
WQCC 20 NMAC 6.2.3103 (DECEMBER 2018)			**0.01**	**2**	**0.005**	**0.05**	**1**	**1**	**0.015**	**0.2**	**0.05**	**0.05**	**0.03**	**10**
40 CFR 141.62 MCL			0.01	2	0.005	0.1	1.3	NE	0.015	NE	0.05	NE	0.03	NE
NMED TAP WATER (JUNE 2019)			0.000855	3.28	0.00624	0.0057	0.7898	13.8	NE	2.02	0.0987	0.0812	0.0592	5.96
EPA RSL TAP WATER (NOVEMBER 2019)			0.000052	3.8	0.0092	22	0.8	14	0.015	0.43	0.1	0.094	0.004	6
SAMPLE ID	DATE SAMPLED	METHOD												
West LDU [2]	11/19/19	200.7/200.8	<0.005	0.063	<0.002	**0.095**	<0.006	**45**	<0.0005	**19**	<0.005	0.0061	0.00076	0.027
	08/22/19	200.7/200.8	0.00061	0.066	<0.002	**0.11**	<0.006	**34**	<0.0025	**28**	<0.005	0.0054	0.00062	0.0082
	05/28/19	200.7/200.8	0.00025	0.076	<0.002	**0.16**	<0.006	**750**	<0.0025	**76**	0.0004	<0.005	<0.0025	0.07
	04/09/19	200.7/200.8	<0.005	0.01	<0.002	**0.66**	<0.006	**1400**	<0.0025	**81**	<0.005	<0.005	<0.0025	0.039
	04/30/18	200.7/200.8	0.005	0.092	<0.002	**0.68**	<0.006	0.31	<0.0025	**1.7**	0.0075	0.0047	0.00058	0.04
	02/21/18	200.7/200.8	<0.005	0.086	<0.002	**0.37**	<0.006	0.19	<0.0025	**1.6**	<0.005	0.012	0.00097	0.04
	12/04/17	200.7/200.8	NA	NA	NA	NA	NA	NA	NA	NA	NA	NA	NA	NA
	09/05/17	200.7/200.8	0.0044	0.11	<0.002	**1.3**	<0.006	**26**	<0.0005	**9.3**	0.0035	<0.005	0.00074	0.14
	06/02/17	200.7/200.8	0.0022	0.11	<0.002	**0.33**	<0.006	**44**	<0.0005	**17**	0.0017	0.0011	0.0023	0.052
	02/21/17	200.7/200.8	0.0068	0.22	<0.002	**2.2**	<0.006	0.59	<0.0025	**2.6**	0.0054	<0.005	NA	0.019
	11/17/16	200.7/200.8	0.004	0.24	<0.002	**0.67**	<0.006	0.17	<0.0005	**0.51**	0.0045	<0.005	0.00066	0.0045
	06/07/16	200.7/200.8	0.0051	0.43	<0.002	0.0013	<0.006	0.2	0.00043	**0.54**	0.003	<0.005	0.00034	0.01
	03/01/16	200.7/200.8	0.0066	0.29	<0.002	**1.4**	<0.006	0.13	<0.005	**0.99**	0.0073	<0.005	0.00082	0.0073
	10/29/15	200.7/200.8	0.0056	0.6	<0.002	**1.2**	<0.006	0.086	<0.005	**0.79**	0.0082	<0.005	<0.01	<0.01
	08/11/15	200.7/200.8	*<0.05**	0.41	<0.002	**1.2**	<0.006	0.21	*<0.025**	**0.55**	*<0.05**	<0.005	<0.025	<0.01
	06/03/15		Insufficient water volume - Did not sample											
	03/10/15	200.7/200.8	0.0033	0.27	<0.002	**0.66**	<0.006	0.42	<0.005	**1.3**	0.0052	<0.005	<0.005	0.033
	11/11/14		Insufficient water volume - Did not sample											
	09/11/14	200.7/200.8	<0.005	0.49	<0.002	**0.27**	<0.006	**1.3**	<0.01	**0.64**	<0.005	<0.005	<0.01	0.26
	06/03/14	200.7/200.8	<0.002	0.082	<0.002	0.043	<0.006	0.92	<0.001	**1.9**	0.0027	<0.005	0.0011	0.022
	03/10/14	200.7/200.8	<0.001	0.061	<0.002	**0.11**	<0.006	**2.6**	<0.001	**3.6**	0.0023	<0.005	<0.001	0.088
	11/12/13	200.7/200.8	0.01	0.17	<0.002	**0.14**	<0.006	0.093	<0.005	**1.3**	0.044	<0.005	<0.005	0.023
	09/05/13	200.7/200.8	0.0086	0.23	<0.002	**0.28**	<0.006	**29**	<0.005	**2**	0.015	<0.025	<0.005	0.35
	06/12/13	200.7/200.8	*<0.01**	0.22	<0.002	0.036	<0.006	0.19	<0.01	**0.29**	**0.11**	<0.005	<0.01	<0.01
	03/18/13	200.7/200.8	<0.005	0.13	<0.002	0.04	<0.006	0.07	<0.005	**0.31**	0.013	<0.005	<0.005	<0.01
	11/28/12	200.7/200.8	<0.005	0.16	<0.002	**0.071**	<0.006	0.38	<0.005	**0.55**	0.013	<0.005	*<0.05**	0.04
	08/21/12	200.7/200.8	0.002	0.38	<0.002	0.032	<0.006	0.15	<0.005	**0.21**	*<0.05**	<0.005	<0.001	0.014
	06/12/12	200.7/200.8	<0.005	0.35	<0.002	0.019	<0.006	0.09	<0.005	0.2	0.0075	<0.005	<0.005	<0.01
	03/20/12	200.7/200.8	0.0018	0.21	<0.002	0.013	<0.006	0.61	<0.005	**0.22**	0.0038	<0.005	<0.001	0.02
	12/14/11	200.7/200.8	0.0071	0.3	<0.002	**0.066**	<0.006	**1.3**	<0.005	**0.31**	<0.005	<0.005	<0.005	0.04
	09/26/11	200.7/200.8	0.0044	0.21	NL	**0.067**	<0.006	0.14	<0.005	**0.86**	0.0075	<0.005	<0.001	0.013
	06/15/11	200.7/200.8	**0.013**	0.61	*<0.01**	**0.091**	<0.03	0.33	*<0.025**	**1.1**	0.031	<0.025	<0.005	<0.05
	03/03/11	200.7/200.8	<0.005	0.46	<0.002	**0.077**	<0.006	**2.1**	<0.005	**1.3**	*<0.05**	<0.005	<0.005	0.012
	11/11/10	6010B	*<0.02**	0.56	<0.002	**0.18**	<0.006	0.22	<0.005	**0.81**	*<0.05**	<0.005	<0.001	<0.05
	09/20/10	6010B	*<0.02**	0.25	<0.002	**0.062**	<0.006	0.12	<0.005	**0.81**	*<0.05**	<0.005	<0.005	<0.05
	03/18/10	6010B	*<0.1**	0.16	*<0.01**	**2.3**	<0.03	**3.2**	*<0.025**	**2.9**	*<0.25**	<0.025	<0.001	<0.25

8.10.2 LEAK DETECTION UNITS (East LDU, West LDU, Oil Sump LDU)
Dissolved Metals Analytical Result Summary

STANDARDS			PARAMETERS											
			Arsenic (mg/L)	Barium (mg/L)	Cadmium (mg/L)	Chromium (mg/L)	Copper (mg/L)	Iron (mg/L)	Lead (mg/L)	Manganese (mg/L)	Selenium (mg/L)	Silver (mg/L)	Uranium (mg/L)	Zinc (mg/L)
WQCC 20 NMAC 6.2.3103 (DECEMBER 2018)			**0.01**	**2**	**0.005**	**0.05**	**1**	**1**	**0.015**	**0.2**	**0.05**	**0.05**	**0.03**	**10**
40 CFR 141.62 MCL			0.01	2	0.005	0.1	1.3	NE	0.015	NE	0.05	NE	0.03	NE
NMED TAP WATER (JUNE 2019)			0.000855	3.28	0.00624	0.0057	0.7898	13.8	NE	2.02	0.0987	0.0812	0.0592	5.96
EPA RSL TAP WATER (NOVEMBER 2019)			0.000052	3.8	0.0092	22	0.8	14	0.015	0.43	0.1	0.094	0.004	6
SAMPLE ID	**DATE SAMPLED**	**METHOD**												
Oil Sump LDU [1]	mid-2013-2017		Insufficient water volume - Did not sample											
	06/12/13	200.7/200.8	*<0.02**	0.43	<0.002	**0.11**	<0.006	0.13	*<0.02**	**1.2**	**0.074**	<0.005	<0.02	<0.01
	03/18/13	200.7/200.8	**0.011**	0.29	<0.002	**0.1**	<0.006	0.15	<0.005	**1.1**	0.013	<0.005	*<0.05**	0.026
	11/28/12	200.7/200.8	**0.014**	0.32	<0.002	**0.08**	<0.006	0.37	<0.005	**1.1**	0.013	<0.005	<0.02	0.06
	08/21/12	200.7/200.8	**0.011**	0.4	<0.002	**0.061**	<0.006	0.19	<0.005	**1.1**	*<0.05**	<0.005	<0.001	0.015
	06/12/12	200.7/200.8	0.0095	0.35	<0.002	0.046	<0.006	0.51	<0.005	**0.83**	0.012	<0.005	<0.005	0.016
	03/20/12	200.7/200.8	0.007	0.23	<0.002	0.047	<0.006	0.33	<0.005	**0.79**	0.02	<0.005	<0.005	0.024
	12/14/11	200.7/200.8	0.0062	0.23	<0.002	0.03	<0.006	0.28	<0.005	**0.35**	0.011	<0.005	<0.001	0.015
	09/26/11	200.7/200.8	0.0062	0.24	<0.002	**0.058**	<0.006	0.1	<0.005	**0.53**	0.011	<0.005	<0.001	0.015
	06/15/11	200.7/200.8	0.0048	0.46	*<0.01**	0.033	<0.03	<0.1	*<0.025**	**0.33**	0.0041	<0.025	<0.002	<0.05
	03/03/11	200.7/200.8	<0.005	0.049	<0.002	**0.054**	<0.006	**2.4**	<0.005	**0.75**	**0.071**	<0.005	<0.005	0.01
	11/10/10	6010B	*<0.02**	0.19	<0.002	0.037	<0.006	0.15	0.0075	**1.2**	*<0.05**	<0.005	<0.001	<0.05
	09/20/10	6010B	*<0.02**	0.32	<0.002	0.03	<0.006	0.12	0.0056	**1.1**	*<0.05**	<0.005	<0.025	<0.05

DEFINITIONS
NA = Not analyzed; NE = Not established.
Bold and highlighted values represent values above the applicable standards
STANDARDS
WQCC 20 NMAC 6.2.3103 - Standards for Ground Water of 10,000 mg/l TDS Concentration or Less.
a) Human Health Standards; b) Other Standards for Domestic Water
40 CFR 141.62 Maximum Contaminant Levels for Inorganic Contaminants
NMED Risk Assessment Guidance for Investigations and Remediations Table A-1
EPA Regional Screening Level (RSL) Summary Table
NOTES
Wells marked in red were not sampled because the well was dry
Items notes with a * and italics have a detection limit greater than or equal to the applicable standard.
1) Oil Sump LDU - Dry - 2013 Third and fourth Quarters. 2014, 2015, 2016 and 2017 - dry.
2) West LDU - 2014 - fourth quarter - not enough water to collect samples (West bay out of service). 2015 - Second Quarter - not enough water to collect samples.
3) East LDU - No samples collected third quarter 2014.

8.10.3 LEAK DETECTION UNITS (East LDU, West LDU, Oil Sump LDU)
Volatile Organic Compound Analytical Result Summary

			PARAMETERS																
STANDARDS			1,2,4-Trimethyl benzene (mg/L)	1,3,5-Trimethyl benzene (mg/L)	Naphthalene (mg/L)	1-Methyl naphthalene (mg/L)	2-Methyl naphthalene (mg/L)	Acetone (mg/L)	2-Butanone (mg/L)	Carbon Disulfide (mg/L)	Isopropyl benzene (mg/L)	4-Isopropyl toluene (mg/L)	4-Methyl-2-pentanone (mg/L)	Methylene Chloride (mg/L)	n-Butyl benzene (mg/L)	n-Propyl benzene (mg/L)	sec-Butyl benzene (mg/L)	Tert-Butyl benzene (mg/L)	Trichloro ethene (TCE) (mg/L)
WQCC 20 NMAC 6.2.3103 (DECEMBER 2018)			NE	NE	**0.03**	NE	NE	NE	NE	NE	NE	NE	NE	**0.005**	NE	NE	NE	NE	**0.005**
40 CFR 141.62 MCL			NE	NE	NE	NE	NE	NE	NE	NE	NE	NE	NE	0.005	NE	NE	NE	NE	0.005
NMED TAP WATER (Rev 2. JUN2019)			NE	NE	0.00165	**0.0114**	**0.035**	**14.06**	**5.56**	**0.81**	**0.447**	NE	**1.24**	0.1180	NE	NE	NE	NE	0.00259
EPA RSL for Tap Water (NOV 2019)			**0.056**	**0.06**	0.00017	0.011	0.036	14	5.6	0.81	0.45	NE	6.3	0.011	**1**	**0.66**	**2**	**0.69**	0.00049
SAMPLE ID	DATE SAMPLED	METHOD																	
East LDU [3]	11/19/19	8260B	**45**	0.019	**0.034**	**0.026**	0.022	<0.05	<0.05	<0.05	0.011	0.0039	<0.05	*<0.015**	0.0031	0.014	0.0036	<0.005	
	08/22/19	8260B	0.037	0.011	0.03	**0.016**	0.014	0.033	0.011	0.0042	0.0074	0.0026	<0.02	0.00088	0.0034	0.0085	0.0026	0.00047	
	05/28/19	8260-Short List	NA	NA	NA	NA	NA	NA	NA		NA		NA			NA			
	04/09/19	8260-Short List	NA	NA	NA	NA	NA	NA	NA		NA		NA			NA			
	04/30/18	8260-Short List	**0.16**	**0.15**	NA	NA	NA	NA	NA		NA		NA			NA			
	02/12/18	8260-Short List	0.025	**0.11**	NA	NA	NA	NA	NA		NA		NA			NA			
	12/04/17	8260-Short List	NA	NA	NA	NA	NA	NA	NA		NA		NA			NA			
	09/05/17	8260-Short List	NA	NA	NA	NA	NA	NA	NA		NA		NA			NA			
	06/02/17	8260-Short List	NA	NA	NA	NA	NA	NA	NA		NA		NA			NA			
	02/21/17	8260B	**0.11**	**0.1**	**0.092**	**0.055**	**0.058**	2	0.36		0.018		0.052			0.028			
	11/17/16	8260-Short List	0.007	0.039	NA	NA	NA	NA	NA		NA		NA			NA			
	06/07/16	8260-Short List	**0.13**	**0.25**	NA	NA	NA	NA	NA		NA		NA			NA			
	03/01/16	8260-Short List	**0.18**	**0.31**	NA	NA	NA	NA	NA		NA		NA			NA			
	10/29/15	8260B	**0.31**	**0.22**	**0.17**	**0.049**	**0.069**	<0.1	<0.1		0.026		NA			0.036			
	08/11/15	8260B	**0.74**	**0.24**	**0.16**	*<0.08**	**0.097**	<0.2	0.46		0.032		<0.2			0.045			
	06/03/15	8260-Short List	**0.96**	**0.3**	NA		NA	NA			NA		NA			NA			
	09/11/14									Not Sampled									
	03/10/14	8021B	**5.8**	**1.9**	NA		NA	NA			NA		NA			NA			
	06/12/13	8021B	**0.8**	**0.28**	NA		NA	NA			NA		NA			NA			
	03/18/13	8021B	**0.9**	**0.29**	NA		NA	NA			NA		NA			NA			
	11/28/12	8021B	NA	NA	NA		NA	NA			NA		NA			NA			
	08/21/12	8021B	**0.84**	**0.28**	NA		NA	NA			NA		NA			NA			
	06/12/12	8021B	**0.94**	**0.3**	NA		NA	NA			NA		NAN			NA			
	06/15/11	8260B	**0.54**	**0.16**	**0.11**		**0.095**	<0.2			0.023		0.23			0.044			
	11/11/10	8260B	NA	NA															
	09/20/10	8021B	**0.81**	**0.26**															

8.10.3 LEAK DETECTION UNITS (East LDU, West LDU, Oil Sump LDU)
Volatile Organic Compound Analytical Result Summary

STANDARDS			PARAMETERS																
			1,2,4-Trimethyl benzene (mg/L)	1,3,5-Trimethyl benzene (mg/L)	Naphthalene (mg/L)	1-Methyl naphthalene (mg/L)	2-Methyl naphthalene (mg/L)	Acetone (mg/L)	2-Butanone (mg/L)	Carbon Disulfide (mg/L)	Isopropyl benzene (mg/L)	4-Isopropyl toluene (mg/L)	4-Methyl-2-pentanone (mg/L)	Methylene Chloride (mg/L)	n-Butyl benzene (mg/L)	n-Propyl benzene (mg/L)	sec-Butyl benzene (mg/L)	Tert-Butyl benzene (mg/L)	Trichloro ethene (TCE) (mg/L)
WQCC 20 NMAC 6.2.3103 (DECEMBER 2018)			NE	NE	**0.03**	NE	NE	NE	NE	NE	NE	NE	NE	**0.005**	NE	NE	NE	NE	**0.005**
40 CFR 141.62 MCL			NE	NE	NE	NE	NE	NE	NE	NE	NE	NE	NE	0.005	NE	NE	NE	NE	0.005
NMED TAP WATER (Rev 2. JUN2019)			NE	NE	0.00165	**0.0114**	**0.035**	**14.06**	**5.56**	**0.81**	**0.447**	NE	**1.24**	0.1180	NE	NE	NE	NE	0.00259
EPA RSL for Tap Water (NOV 2019)			**0.056**	**0.06**	0.00017	0.011	0.036	14	5.6	0.81	0.45	NE	6.3	0.011	**1**	**0.66**	**2**	**0.69**	0.00049
SAMPLE ID	**DATE SAMPLED**	**METHOD**																	
West LDU [2]	11/11/19	8260B	<0.001	<0.001	<0.002	<0.004	<0.004	<0.01	<0.01		<0.001		<0.01			<0.001	0.00037		0.00022
	08/22/19	8260-Short List	0.00034	<0.001	<0.002	0.0045	<0.004	0.0065	NA		<0.001		<0.01			<0.001			0.00046
	05/28/19	8260-Short List	NA	NA	NA	NA	NA	NA	NA		NA		NA			NA			
	04/09/19	8260-Short List	NA	NA	NA	NA	NA	NA	NA		NA		NA			NA			
	04/30/18	8260-Short List	0.0018	<0.01	NA	NA	NA	NA	NA		NA		NA			NA			
	02/21/18	8260-Short List	0.0029	0.0016	NA	NA	NA	NA	NA		NA		NA			NA			
	12/04/17	8260B	NA	NA	NA	NA	NA	NA	NA		NA		NA			NA			
	09/05/17	8260-Short List	NA	NA	NA	NA	NA	NA	NA		NA		NA			NA			
	06/02/17	8260-Short List	NA	NA	NA	NA	NA	NA	NA		NA		NA			NA			
	02/21/17	8260B	0.017	0.0076	0.022	**0.026**	0.023	<0.1	<0.1		0.0041		<0.1			0.004			
	11/17/16	8260B	0.0098	0.0034	NA		NA	NA			NA		NA			NA			
	06/07/16	8260-Short List	**0.062**	0.0082	NA		NA	NA			NA		NA			NA			
	03/01/16	8260-Short List	0.0068	<0.02	NA		NA	NA			NA		NA			NA			
	10/29/15	8260B	0.048	<0.01	**0.036**		**0.047**	0.18			<0.01		<0.1			<0.1			
	08/11/15	8260B	**0.076**	<0.02	**0.056**		*<0.08**	<0.2			<0.02		<0.2			<0.02			
	06/03/15		Insufficient water volume - Did not sample																
	03/10/15	8021B	**0.091**	0.037	NA		NA	NA			NA		NA			NA			
	11/11/14		Insufficient water volume - Did not sample																
	09/11/14	8021B	**0.41**	**0.15**	NA		NA	NA			NA		NA			NA			
	06/03/14	8021B	**0.76**	**0.25**	NA		NA	NA			NA		NA			NA			
	03/10/14	8021B	**0.57**	**0.19**	NA		NA	NA			NA		NA			NA			
	09/05/13	8021B	**1.8**	**0.62**	NA		NA	NA			NA		NA			NA			
	06/12/13	8021B	**0.69**	**0.23**	NA		NA	NA			NA		NA			NA			
	03/18/13	8021B	**0.61**	**0.21**	NA		NA	NA			NA		NA			NA			
	11/28/12	8021B	NA	NA	NA		NA	NA			NA		NA			NA			
	08/21/12	8021B	**0.55**	**0.24**	NA		NA	NA			NA		NA			NA			
	06/12/12	821B	**0.81**	**0.26**	NA		NA	NA			NA		NA			NA			
	06/15/11	8260B	0.041	0.015	<0.02		*<0.04**	<0.1			<0.01		<0.1			<0.01			
	11/11/10	8260B	NA	NA															
	09/20/10	8021B	**0.34**	**0.1**															
Oil Sump LDU [1]	mid-2013-2017		Insufficient water volume - Did not sample																
	06/12/13	8021B	**0.8**	**0.25**	NA		NA	NA			NA		NA			NA			
	03/18/13	8021B	**0.74**	**0.23**	NA		NA	NA			NA		NA			NA			
	11/28/12	8021B	NA	NA	NA		NA	NA			NA		NA			NA			
	08/21/12	8021B	**0.85**	**0.27**	NA		NA	NA			NA		NA			NA			
	06/12/12	8021B	**0.9**	**0.28**	NA		NA	NA			NA		NA			NA			
	06/15/11	8260B	**0.5**	*<0.2**	*<0.4**		*<0.8**	5.3			<0.2		*<2.0**			<0.2			
	11/11/10	8260B	NA	NA															
	09/20/10	8021B	**12**	**4.6**															

DEFINITIONS
NA = Not analyzed; NE = Not established.
Bold and highlighted values represent values above the applicable standards

STANDARDS
WQCC 20 NMAC 6.2.3103 - Standards for Ground Water of 10,000 mg/l TDS Concentration or Less.
a) Human Health Standards; b) Other Standards for Domestic Water
40 CFR 141.62 Detection Limits for Inorganic Contaminants
EPA Regional Screening Level (RSL) Summary Table
NMED Risk Assessment Guidance for Investigations and Remediations Table A-1
NOTES
Wells marked in red were not sampled because the well was dry
Items notes with a * and italics have a detection limit greater than or equal to the applicable standard.
1) Oil Sump LDU - Dry - 2013 Third and fourth Quarters. 2014, 2015, 2016 and 2017 - dry.
2) West LDU - 2014 - fourth quarter - not enough water to collect samples (West bay out of service). 2015 - Second Quarter - not enough water to collect samples.
3) East LDU - No samples collected third quarter 2014.

8.11 RW-1, RW-2, RW-5, RW-6
BTEX and MTBE Analytical Result Summary

STANDARDS			PARAMETERS				
			Benzene (mg/L)	Toluene (mg/L)	Ethylbenzene (mg/L)	Total Xylenes (mg/L)	MTBE (mg/L)
WQCC 20 NMAC 6.2.3103 (DEC 2018)			**0.005**	**1**	**0.7**	**0.62**	**0.1**
40 CFR 141.61 MCL			0.005	1	0.7	10	NE
NMED TAP WATER (JUNE 2019)			0.00455	1.09	0.0149	0.193	0.143
EPA RSL for Tap Water (NOVEMBER 2019)			0.0046	1.1	0.0015	0.19	0.14
WELL ID	**DATE SAMPLED**	**METHOD**					
RW-1 [1]	4th Qtr 2018 - 2019	--	Did not gauge or sample - recovery apparatus installed				
	3rd Qtr 2018 - 2015	--	Not Sampled - SPH Detected				
	09/18/14	8260B	**37**	**35**	**1.8**	**10**	**1.2**
	09/16/13	8260B	**54**	**35**	**2.4**	**13**	**2.2**
	08/23/12	8260B	**45**	**82**	**4.9**	**31**	**3.1**
	10/03/11	8260B	**51**	**37**	**3.7**	**23**	**2.9**
RW-2 [1]	4th Qtr 2018 - 2019	--	Did not gauge or sample - recovery apparatus installed				
	08/28/18	8260B	**48**	**4**	**1.5**	**3.8**	**1.1**
	05/08/18	8260B	**46**	**5**	**1.5**	**4.2**	**1.2**
	02/20/18	8260B	**42**	**3.7**	**1.5**	**3.8**	**1.2**
	12/06/17	8260B	**38**	**2.9**	**1.5**	**3.6**	**1.3**
	09/19/17	8260B	**37**	**6.7**	**1.2**	**4**	**1.3**
	06/20/17	8260B	**47**	**9**	**1.4**	**4.6**	**1.7**
	03/16/17	8260B	**37**	**2.3**	**1.3**	**3.1**	**1.6**
	11/16/16	8260B	**38**	**3.4**	**1.2**	**3.2**	**1.7**
	09/13/16	8260B	**38**	**3.8**	**1.2**	**3.1**	**1.6**
	06/08/16	8260B	**36**	**2.9**	**1.1**	**3.1**	**1.7**
	03/07/16	8260B	**46**	**4.1**	**1.2**	**3.5**	**1.9**
	08/23/15	8260B	**42**	**6.9**	**1.1**	**3.7**	**1.8**
	09/18/14	8260B	**40**	**4.5**	**0.86**	**2.5**	**1.9**
	09/16/13	8260B	**48**	**3.4**	**0.87**	**2.3**	**2.8**
	08/24/12	8260B	**42**	**2.6**	0.59	**1.7**	**3.3**
	10/03/11	8260B	**39**	**5.3**	0.57	**1.5**	**3.7**
RW-5 [1]	4th Qtr 2018 - 2019	--	Did not gauge or sample - recovery apparatus installed				
	2nd Qtr 2017 - 3rd Qtr 2018	--	Not Sampled - SPH Detected				
	03/16/17	8260B	**0.64**	0.0028	0.41	0.094	0.0077
	11/16/16	8260B	**0.72**	0.0035	0.34	0.13	0.0012
	09/13/16	8260B	**0.57**	0.0035	0.26	0.12	<0.005
	06/07/16	8260B	**0.54**	0.0038	0.15	0.11	0.0042
	03/07/16	8260B	**0.39**	0.0024	0.15	0.086	0.0026
	10/29/15	8260B	**0.5**	<0.01	0.13	0.095	<0.01
	08/23/15	8260B	**0.43**	<0.005	0.037	0.07	<0.005
	09/18/14	8260B	**0.35**	<0.01	0.11	0.056	<0.01
	09/16/13	8260B	**0.37**	<0.01	0.11	0.089	<0.01
	08/23/12	8260B	**0.19**	<0.01	0.26	0.091	0.032
	10/04/11	8260B	**0.56**	<0.01	0.21	0.26	0.095

8.11 RW-1, RW-2, RW-5, RW-6
BTEX and MTBE Analytical Result Summary

STANDARDS			PARAMETERS				
			Benzene (mg/L)	Toluene (mg/L)	Ethylbenzene (mg/L)	Total Xylenes (mg/L)	MTBE (mg/L)
WQCC 20 NMAC 6.2.3103 (DEC 2018)			**0.005**	**1**	**0.7**	**0.62**	**0.1**
40 CFR 141.61 MCL			0.005	1	0.7	10	NE
NMED TAP WATER (JUNE 2019)			0.00455	1.09	0.0149	0.193	0.143
EPA RSL for Tap Water (NOVEMBER 2019)			0.0046	1.1	0.0015	0.19	0.14
WELL ID	**DATE SAMPLED**	**METHOD**					
RW-6 [1]	4th Qtr 2018 - 2019	--	Did not gauge or sample - recovery apparatus installed				
	2nd Qtr 2017 - 3rd Qtr 2018	--	Not Sampled - SPH Detected				
	03/16/17	8260B	**0.28**	0.28	0.63	**1.4**	0.025
	11/16/16	8260B	**0.27**	0.12	0.29	**0.78**	0.014
	09/13/16	8260B	**0.28**	0.11	0.29	**0.81**	0.017
	03/07/16	8260B	**0.39**	0.19	0.51	0.086	0.021
	10/29/15	8260B	**0.34**	0.11	0.28	**0.85**	0.043
	08/23/15	8260B	**0.36**	0.071	0.093	**0.67**	0.05
	09/18/14	8260B	**0.47**	0.23	0.45	**1.3**	0.046
	09/16/13	8260B	**0.68**	<0.05	0.18	**1.1**	<0.05
	08/23/12	8260B	**0.74**	0.052	0.4	**1.6**	0.073
	10/04/11	8260B	**0.87**	0.029	0.33	<0.0015	<0.01

DEFINITIONS

NA = Not analyzed; NE = Not established

Bold and highlighted values represent values above the applicable standards

STANDARDS

WQCC 20 NMAC 6.2.3103 - Standards for Ground Water of 10,000 mg/l TDS Concentration or Less.

a) Human Health Standards; b) Other Standards for Domestic Water

40 CFR 141.61 Maximum Contaminant Levels for Organic Contaminants

NMED Risk Assessment Guidance for Investigations and Remediations Table A-1

EPA Regional Screening Level (RSL) Summary Table

NOTES:

Wells marked in red were not sampled because of SPH or recovery appartus was present

1) Recovery wells added to the approved 2010 FWGWMP (8/25/10) annual sampling schedule.

8.11.1 RW-1, RW-2, RW-3, RW-5
General Chemistry and DRO/GRO/MRO Analytical Result Summary

			PARAMETERS								
STANDARDS			Fluoride (mg/L)	Chloride (mg/L)	Nitrite (mg/L)	Nitrate (mg/L)	Phosphorus (mg/L)	Sulfate (mg/L)	DRO (mg/L)	GRO (mg/L)	MRO (mg/L)
WQCC 20 NMAC 6.2.3103 (DEC 2018)			**1.6**	**250.0**	**1**	**10**	NE	**600**	NE	NE	NE
40 CFR 141.62 MCL			4	NE	1	10	NE	NE	10	NE	NE
NMED TAP WATER (JUNE 2019)			1.18	NE	1.97	31.60	NE	NE	NE	NE	NE
EPA RSL for Tap Water (NOVEMBER 2019)			0.8	NE	2	32	NE	NE	NE	NE	NE
NMED SSG (JUNE 2019)			NE	NE	NE	NE	NE	NE	**0.0167**	**0.0101**	**0.0858**
WELL ID	DATE SAMPLED	METHOD									
RW-1 [1]	4th Qtr 2018 - 2019	--	Did not gauge or sample - recovery apparatus installed								
	3rd Qtr 2018 - 2015	--	Not Sampled - SPH Detected								
	09/16/13	300.0	<0.5	**370**	<0.5	<0.5	<2.5	<2.5			
	08/23/12	300.0	<0.5	**380**	*<1.0**	<1.0	<2.5	<2.5			
	10/03/11	300.0	<0.5	**410**	**220**	**220**	<2.5	<2.5			
RW-2 [1]	4th Qtr 2018 - 2019	--	Did not gauge or sample - recovery apparatus installed								
	08/28/18	8015D	NA	NA	NA	NA	NA	NA	**7.2**	**130**	*<5.0**
	05/08/18	8015D	NA	NA	NA	NA	NA	NA	**9**	**120**	*<5.0**
	02/20/18	8015D	NA	NA	NA	NA	NA	NA	**7.9**	**120**	*<5.0**
	12/06/17	8015D	NA	NA	NA	NA	NA	NA	**8.7**	**120**	*<5.0**
	09/19/17	8015D	NA	NA	NA	NA	NA	NA	**9.2**	**120**	*<5.0**
	06/20/17	8015D	NA	NA	NA	NA	NA	NA	**11**	**130**	*<5.0**
	03/16/17	8015D	NA	NA	NA	NA	NA	NA	**11**	**92**	*<5.0**
	11/16/16	8015D	NA	NA	NA	NA	NA	NA	**8.4**	**130**	*<5.0**
	09/13/16	8015D	NA	NA	NA	NA	NA	NA	**14**	**140**	*<5.0**
	06/08/16	8015D	NA	NA	NA	NA	NA	NA	**14**	**140**	*<5.0**
	03/07/16	8015D	NA	NA	NA	NA	NA	NA	**7.2**	**160**	*<5.0**
	10/29/15	8015D	NA	NA	NA	NA	NA	NA	**9.7**	**130**	*<5.0**
	08/23/15	8015D	NA	NA	NA	NA	NA	NA	**7.4**	**82**	*<5.0**
	09/16/13	300.0	0.27	84	<0.1	<0.1	<0.5	1.7			
	08/24/12	300.0	<0.5	90	*<1.0**	<1.0	<2.5	<2.5			
	10/03/11	300.0	<0.5	130	**67**	**67**	<2.5	<2.5			
RW-5 [1]	4th Qtr 2018 - 2019	--	Did not gauge or sample - recovery apparatus installed								
	2nd Qtr 2017 - 3rd Qtr 2018	--	Not Sampled - SPH Detected								
	03/16/17	8015D	NA	NA	NA	NA	NA	NA	**3.5**	**6.5**	*<5.0**
	11/16/16	8015D	NA	NA	NA	NA	NA	NA	**4.9**	**7.6**	*<5.0**
	09/13/16	8015D	NA	NA	NA	NA	NA	NA	**5.4**	**6.4**	*<5.0**
	06/07/16	8015D	NA	NA	NA	NA	NA	NA	**6.3**	**4.9**	*<5.0**
	03/07/16	8015D	NA	NA	NA	NA	NA	NA	**3.4**	**5.5**	*<5.0**
	10/29/15	8015D	NA	NA	NA	NA	NA	NA	**12**	**3.6**	*<5.0**
	08/23/15	8015D	NA	NA	NA	NA	NA	NA	**4.1**	**2.2**	*<5.0**
	09/16/13	300.0	0.89	5.6	<0.1	<0.1	<0.5	<0.5			
	08/23/12	300.0	0.8	11	*<1.0**	<1.0	<2.5	<2.5			
	10/04/11	300.0	0.54	26	**14**	**14**	<2.5	<2.5			

8.11.1 RW-1, RW-2, RW-3, RW-5
General Chemistry and DRO/GRO/MRO Analytical Result Summary

STANDARDS			PARAMETERS								
			Fluoride (mg/L)	Chloride (mg/L)	Nitrite (mg/L)	Nitrate (mg/L)	Phosphorus (mg/L)	Sulfate (mg/L)	DRO (mg/L)	GRO (mg/L)	MRO (mg/L)
WQCC 20 NMAC 6.2.3103 (DEC 2018)			**1.6**	**250.0**	**1**	**10**	NE	**600**	NE	NE	NE
40 CFR 141.62 MCL			4	NE	1	10	NE	NE	10	NE	NE
NMED TAP WATER (JUNE 2019)			1.18	NE	1.97	31.60	NE	NE	NE	NE	NE
EPA RSL for Tap Water (NOVEMBER 2019)			0.8	NE	2	32	NE	NE	NE	NE	NE
NMED SSG (JUNE 2019)			NE	NE	NE	NE	NE	NE	**0.0167**	**0.0101**	**0.0858**
WELL ID	**DATE SAMPLED**	**METHOD**									
RW-6 [1]	4th Qtr 2018 - 2019	--	Did not gauge or sample - recovery apparatus installed								
	2nd Qtr 2017 - 3rd Qtr 2018	--	Not Sampled - SPH Detected								
	03/16/17	8015D	NA	NA	NA	NA	NA	NA	**8.5**	**13**	*<50**
	11/16/16	8015D	NA	NA	NA	NA	NA	NA	**240**	**7.1**	*<50**
	09/13/16	8015D	NA	NA	NA	NA	NA	NA	**1200**	**11**	*<500**
	06/07/16	8015D	NA	NA	NA	NA	NA	NA	**35**	**7**	*<5.0**
	03/07/16	8015D	NA	NA	NA	NA	NA	NA	**6.1**	**12**	*<50**
	10/29/15	8015D	NA	NA	NA	NA	NA	NA	**340**	**6.2**	*<50**
	08/23/15	8015D	NA	NA	NA	NA	NA	NA	**1400**	**4.9**	*<500**
	09/16/13	300.0	<0.5	45	<0.5	<0.5	<2.5	<2.5			
	08/23/12	300.0	<0.5	45	*<1.0**	<1.0	<2.5	<2.5			
	10/04/11	300.0	<0.5	80	*<1.0**	<1.0	<2.5	<2.5			

DEFINITIONS

NA = Not analyzed; NE = Not established

Bold and highlighted values represent values above the applicable standards

STANDARDS

WQCC 20 NMAC 6.2.3103 - Standards for Ground Water of 10,000 mg/l TDS Concentration or Less.

a) Human Health Standards; b) Other Standards for Domestic Water

40 CFR 141.61 Maximum Contaminant Levels for Organic Contaminants

NMED Risk Assessment Guidance for Investigations and Remediations Table A-1

EPA Regional Screening Level (RSL) Summary Table

NMED Soil Screening Guidance Volume 1, Table 6-4 (groundwater)

NOTES

Wells marked in red were not sampled because of SPH or recovery appartus was present

Items notes with a * and italics have a detection limit greater than or equal to the applicable standard.

1) Recovery wells added to the approved 2010 FWGWMP (8/25/10) annual sampling schedule.

8.11.2 RW-1, RW-2, RW-5, RW-6
Total Metals Analytical Result Summary

STANDARDS			PARAMETERS												
			Arsenic (mg/L)	Barium (mg/L)	Cadmium (mg/L)	Chromium (mg/L)	Copper (mg/L)	Iron (mg/L)	Lead (mg/L)	Manganese (mg/L)	Selenium (mg/L)	Silver (mg/L)	Mercury (ug/L)	Uranium (mg/L)	Zinc (mg/L)
WQCC 20 NMAC 6.2.3103 (DEC 2018)			**0.01**	**2**	**0.005**	**0.05**	**1**	**1**	**0.015**	**0.2**	**0.05**	**0.05**	**2**	**0.03**	**10**
40 CFR 141.62 MCL			0.01	2	0.005	0.1	1.3	NE	0.015	NE	0.05	NE	2	0.03	NE
NMED TAP WATER (JUNE 2019)			0.000855	3.28	0.00624	0.0057	0.7898	13.8	NE	2.02	0.0987	0.0812	0.626	0.0592	5.96
EPA RSL for Tap Water (NOVEMBER 2019)			0.000052	3.8	0.0092	NE	0.8	14	0.015	0.43	0.1	0.094	0.63	0.004	6
WELL ID	DATE SAMPLED	METHOD													
RW-1 [1]	09/18/14	200.7/200.8	*<0.01**	**3.5**	<0.002	0.0075	0.014	**9.6**	<0.001	**3.2**	<0.01	<0.005	<0.2	0.0014	<0.01
	09/16/13	200.7/200.8	0.0096	**4.9**	<0.002	0.0075	0.014	**19**	0.0053	**3.3**	0.01	*<0.25**	<0.2	0.0019	0.044
	08/23/12	200.7/200.8	0.01	**3.7**	<0.002	<0.006	<0.006	**6.9**	<0.005	**3.6**	0.0057	<0.005	<0.2	0.0041	<0.01
	10/03/11	200.7/200.8	0.01	**4.8**	<0.002	<0.006	0.035	**4.6**	<0.005	**3.3**	0.0075	<0.005	<0.2	0.0043	0.06
RW-2 [1]	09/18/14	200.7/200.8	0.0086	**4.1**	<0.002	<0.006	<0.006	**15**	0.0043	**2.6**	0.0057	<0.005	<0.2	<0.001	0.016
	09/16/13	200.7/200.8	0.0064	**3.9**	<0.002	<0.006	<0.006	**13**	0.0021	**2.3**	0.0074	*<0.1**	<0.2	<0.001	0.026
	08/24/12	200.7/200.8	0.0069	**3.7**	<0.002	<0.006	<0.006	**10**	<0.005	**2.1**	0.0044	<0.005	<0.2	<0.0025	<0.01
	10/03/11	200.7/200.8	0.0061	**3.1**	<0.002	<0.006	0.0098	**11**	<0.005	**2.2**	0.0069	<0.005	<0.2	<0.0025	0.028
RW-5 [1]	09/18/14	200.7/200.8	0.0019	2	<0.002	<0.006	<0.006	**2.8**	<0.001	**0.5**	<0.001	<0.005	<0.2	<0.001	<0.01
	09/16/13	200.7/200.8	0.0022	**2.3**	<0.002	<0.006	<0.006	**4**	<0.001	**0.59**	<0.001	<0.005	<0.2	<0.001	<0.01
	08/23/12	200.7/200.8	0.0033	**3.1**	<0.002	<0.006	<0.006	**5**	<0.005	**0.76**	<0.0025	<0.005	<0.2	<0.0025	<0.01
	10/04/11	200.7/200.8	0.0063	**3.7**	<0.002	<0.006	<0.006	**7.8**	<0.005	**0.97**	<0.0025	<0.005	<0.2	<0.0025	0.013
RW-6 [1]	09/18/14	200.7/200.8	**0.014**	**3.3**	<0.002	<0.006	<0.006	**6.8**	0.0067	**0.79**	0.0015	<0.005	<0.2	<0.001	<0.01
	09/16/13	200.7/200.8	**0.013**	**3.6**	<0.002	<0.006	<0.006	**11**	0.0069	**0.9**	0.0015	<0.005	<0.2	<0.001	<0.01
	08/23/12	200.7/200.8	**0.015**	**3.7**	<0.002	<0.006	<0.006	**7.4**	0.0093	**0.89**	<0.0025	<0.005	<0.2	<0.0025	<0.01
	10/04/11	200.7/200.8	**0.017**	**4.2**	<0.002	<0.006	<0.006	**11**	0.0093	**1.1**	<0.0025	<0.005	<0.2	<0.0025	<0.01

DEFINITIONS

NA = Not analyzed; NE = Not established

Bold and highlighted values represent values above the applicable standards

STANDARDS

WQCC 20 NMAC 6.2.3103 - Standards for Ground Water of 10,000 mg/l TDS Concentration or Less.

a) Human Health Standards; b) Other Standards for Domestic Water

40 CFR 141.62 Maximum Contaminant Levels for Inorganic Contaminants

NMED Risk Assessment Guidance for Investigations and Remediations Table A-1

EPA Regional Screening Level (RSL) Summary Table

NOTES

Items notes with a * and italics have a detection limit greater than or equal to the applicable standard.

1) Recovery wells added to the approved 2010 FWGWMP (8/25/10) annual sampling schedule.

Metals(Total and Dissolved) no longer required per NMED Comment 7(f), Approval with Modifications...dated July 24, 2015.

8.11.3 RW-1, RW-2, RW-5, RW-6
Dissolved Metals Analytical Result Summary

STANDARDS			PARAMETERS											
			Arsenic (mg/L)	Barium (mg/L)	Cadmium (mg/L)	Chromium (mg/L)	Copper (mg/L)	Iron (mg/L)	Lead (mg/L)	Manganese (mg/L)	Selenium (mg/L)	Silver (mg/L)	Uranium (mg/L)	Zinc (mg/L)
WQCC 20 NMAC 6.2.3103 (DEC 2018)			**0.01**	**2**	**0.005**	**0.05**	**1**	**1**	**0.015**	**0.2**	**0.05**	**0.05**	**0.03**	**10**
40 CFR 141.62 MCL			0.01	2	0.005	0.1	1.3	NE	0.015	NE	0.05	NE	0.03	NE
NMED TAP WATER (JUNE 2019)			0.000855	3.28	0.00624	0.0057	0.7898	13.8	NE	2.02	0.0987	0.0812	0.0592	5.96
EPA RSL for Tap Water (NOVEMBER 2019)			0.000052	3.8	0.0092	NE	0.8	14	0.015	0.43	0.1	0.094	0.004	6
WELL ID	**DATE SAMPLED**	**METHOD**												
RW-1 [1]	09/18/14	200.7/200.8	*<0.01**	**3.6**	<0.002	<0.006	<0.006	**9.6**	<0.001	**3.3**	<0.01	<0.005	0.0014	0.067
	09/16/13	200.7/200.8	0.0082	**5.3**	<0.002	<0.006	<0.006	**11**	<0.001	**3.5**	0.012	*<0.05**	<0.001	0.017
	08/23/12	200.7/200.8	0.009	**3.6**	<0.002	<0.006	<0.006	**7.6**	<0.005	**3.6**	0.0062	<0.005	0.0041	0.021
	10/03/11	200.7/200.8	0.0071	**5**	<0.002	<0.006	<0.006	**5.2**	<0.005	**3.3**	0.013	<0.005	0.0028	0.067
RW-2 [1]	09/18/14	200.7/200.8	*<0.01**	**3.8**	<0.002	<0.006	<0.006	**13**	<0.001	**2.4**	<0.01	<0.005	<0.001	0.023
	09/16/13	200.7/200.8	0.0057	**3.9**	<0.002	<0.006	<0.006	**11**	<0.001	**2.2**	0.0076	*<0.1**	<0.001	<0.01
	08/24/12	200.7/200.8	0.0073	**3.5**	<0.002	<0.006	<0.006	**10**	<0.005	**2.1**	0.0046	<0.005	<0.001	0.023
	10/03/11	200.7/200.8	0.006	**2.8**	<0.002	<0.006	<0.006	**6.1**	<0.005	**2**	0.01	<0.005	<0.001	<0.01
RW-5 [1]	09/18/14	200.7/200.8	0.002	1.9	<0.002	<0.006	<0.006	**2.6**	<0.001	**0.5**	<0.001	<0.005	<0.001	0.049
	09/16/13	200.7/200.8	0.002	**2.5**	<0.002	<0.006	<0.006	**3.3**	<0.001	**0.61**	<0.001	<0.005	<0.001	<0.01
	08/23/12	200.7/200.8	0.0022	**2.7**	<0.002	<0.006	<0.006	**3.7**	<0.005	**0.69**	0.001	<0.005	<0.001	0.017
	10/04/11	200.7/200.8	0.0048	**3.1**	<0.002	<0.006	<0.006	**5.4**	<0.005	**0.89**	0.0035	<0.005	<0.001	<0.01
RW-6 [1]	09/18/14	200.7/200.8	**0.014**	**3.2**	<0.002	<0.006	<0.006	**6.5**	0.0049	**0.75**	<0.005	<0.005	<0.001	0.024
	09/16/13	200.7/200.8	0.0096	**3.6**	<0.002	<0.006	<0.006	**7.1**	0.0034	**0.87**	0.0025	<0.005	<0.001	0.032
	08/23/12	200.7/200.8	**0.015**	**3.7**	<0.002	<0.006	<0.006	**8.3**	0.0091	**0.92**	0.0016	<0.005	<0.001	0.021
	10/04/11	200.7/200.8	**0.016**	**4.1**	<0.002	<0.006	<0.006	**10**	0.007	**1.1**	0.0044	<0.005	<0.001	<0.01

DEFINITIONS

NA = Not analyzed; NE = Not established

Bold and highlighted values represent values above the applicable standards

STANDARDS

WQCC 20 NMAC 6.2.3103 - Standards for Ground Water of 10,000 mg/l TDS Concentration or Less.

a) Human Health Standards; b) Other Standards for Domestic Water

40 CFR 141.62 Maximum Contaminant Levels for Inorganic Contaminants

NMED Risk Assessment Guidance for Investigations and Remediations Table A-1

EPA Regional Screening Level (RSL) Summary Table

NOTES

Items notes with a * and italics have a detection limit greater than or equal to the applicable standard.

1) Recovery wells added to the approved 2010 FWGWMP (8/25/10) annual sampling schedule.

Metals(Total and Dissolved) no longer required per NMED Comment 7(f), Approval with Modifications...dated July 24, 2015.

8.11.4 RW-1, RW-2, RW-5, RW-6

Volatile Organic Compounds Analytical Result Summary

			PARAMETERS														
STANDARDS			1,2,4-Trimethyl benzene (mg/L)	1,3,5-Trimethyl benzene (mg/L)	Naphthalene (mg/L)	1-Methyl naphthalene (mg/L)	2-Methyl naphthalene (mg/L)	Acetone (mg/L)	2-Butanone (mg/L)	Chloro methane (mg/L)	Isopropyl benzene (mg/L)	4-Isopropyl toluene (mg/L)	n-Butyl benzene (mg/L)	n-Propyl benzene (mg/L)	Sec-butyl benzene (mg/L)	Styrene (mg/L)	tert-Butyl benzene (mg/L)
WQCC 20 NMAC 6.2.3103 (DEC 2018)			NE	NE	0.03	NE	NE	NE	NE	NE	NE	NE	NE	NE	NE	0.1	NE
40 CFR 141.61 MCL			NE	NE	NE	NE	NE	NE	NE	NE	NE	NE	NE	NE	NE	0.1	NE
NMED TAP WATER (JUNE 2019)			NE	NE	0.00165	0.0114	0.035	14.06	5.56	0.0203	0.447	NE	NE	NE	NE	1.21	NE
EPA RSL for Tap Water (NOVEMBER 2019)			0.056	0.060	0.00017	0.0011	0.036	14	5.6	0.19	0.45	NE	1	0.66	2	1.2	0.69
WELL ID	DATE SAMPLED	METHOD															
RW-1 [2]	4th Qtr 2018 - 2019	--	Did not gauge or sample - recovery apparatus installed														
	3rd Qtr 2018 - 2015	--	Not Sampled - SPH Detected														
	09/18/14	8260B	<1.0*	<1.0*	<2.0*	<4.0*	<4.0*			<3.0*	<1.0*	<1.0		<1.0*		<1.0*	
	09/16/13	8260B	1.3	<1.0*	<2.0*	<4.0*	<4.0*			<3.0*	<1.0*	<1.0		<1.0*		<1.0*	
	08/23/12	8260B	2.8	<1.0*	<2.0*	<4.0*	<4.0*			<0.03*	<0.01	<0.01		<0.01		<0.01	
	10/03/11	8260B	5.8	0.98	0.6	0.071	0.15			<0.03*	<0.01	<0.01		0.4		0.013	
RW-2 [1]	4th Qtr 2018 - 2019	--	Did not gauge or sample - recovery apparatus installed														
	08/28/18	8260B	0.31	0.043	0.1	0.04	<0.1*	<1.0	<1.0	<0.2*	0.024	<0.1	<0.3	0.056		<0.1*	
	05/08/18	8260B	0.34	0.031	0.095	<0.8*	<0.8*	<2.0	<2.0	<0.4*	0.013	<0.2	<0.6	0.042		<0.2*	
	02/20/18	8260B	0.32	0.038	0.14	0.076	0.053	<1.0	<1.0	<0.2*	0.019	<0.1	0.014	0.059		<0.1*	
	12/06/17	8260B	0.28	0.026	0.069	0.021	<0.4*	<1.0	<1.0	<0.3*	0.019	<0.1		0.042		<0.1*	
	09/19/17	8260B	0.27	0.046	0.11	0.055	<0.4*	<1.0	<1.0	<0.3*	0.018	<0.1		0.037		<0.1*	
	06/20/17	8260B	0.28	0.058	0.11	0.063	0.042	0.13	<1.0	<0.3*	0.021	<0.1		0.043		<0.1*	
	03/16/17	8260B	0.2	0.04	0.15	0.13	0.11	<1.0	<1.0	<0.3*	0.025	<0.1		0.044		<0.1*	
	11/16/16	8260B	0.2	0.049	0.15	0.13	<0.8*	<2.0	<2.0	<0.6*	<0.2	<0.2		0.063		<0.2*	
	09/13/16	8260B	0.21	0.044	0.14	0.088	<0.8*	<2.0	<2.0	<0.6*	0.03	<0.2		0.056		<0.2*	
	06/08/16	8260B	0.23	0.12	0.18	0.17	<2.0*			<1.5*	<0.5*	<0.07		0.071		<0.5*	
	03/07/16	8260B	0.18	0.028	0.1	0.069	0.028			<0.15*	0.011	<0.05		0.045		<0.05	
	10/29/15	8260B	0.18	0.031	0.14	0.075	<0.04*			<0.03*	0.02	<0.01		0.046		<0.01	
	08/23/15	8260B	0.21	<0.2*	<0.4*	<0.8*	<0.8*			<0.6*	<0.2	<0.2		<0.6		<0.2*	
	09/18/14	8260B	0.15	<0.1*	<0.2*	<0.4*	<0.4*			<0.3*	<0.1	<0.1		<0.1		<0.1*	
	09/16/13	8260B	0.13	<0.1*	<0.2*	<0.4*	<0.4*			<0.3*	<0.1	<0.1		<0.1		<0.1*	
	08/24/12	8260B	<0.1*	<0.1*	<0.2*	<0.4*	<0.4*			<0.3*	<0.1	<0.1		<0.1		<0.1*	
	10/03/11	8260B	0.098	0.024	0.057	0.054	<0.04*			0.14	<0.01	<0.01		0.036		<0.01	
RW-5 [1]	4th Qtr 2018 - 2019	--	Did not gauge or sample - recovery apparatus installed														
	2nd Qtr 2017 - 3rd Qtr 2018	--	Not Sampled - SPH Detected														
	03/16/17	8260B	0.033	0.011	0.14	0.12	0.12	0.0067	<0.05	<0.015	0.025	0.005	0.013	0.06	0.0083	<0.005	<0.005
	11/16/16	8260B	0.062	0.014	0.14	0.12	0.12	<0.05	<0.05	<0.015	0.02	0.0056	0.012	0.043	0.0071	<0.01	0.0067
	09/13/16	8260B	0.049	0.013	0.13	0.097	0.12	<0.05	0.0053	<0.015	0.016	0.0055	0.012	0.037	0.0075	<0.005	
	06/07/16	8260B	0.046	0.017	0.13	0.13	0.15	<0.1	<0.1	<0.03*	0.01	0.0071	0.016	0.026	0.0079	<0.01	
	03/07/16	8260B	0.041	0.013	0.12	0.11	0.12			<0.015	0.012	0.0048	0.014	0.032	0.01	<0.005	
	10/29/15	8260B	0.048	0.015	0.17	0.11	0.13			<0.03*	<0.01	<0.01		0.027	<0.01	<0.01	
	08/23/15	8260B	0.041	0.012	0.085	0.067	0.083			<0.015	<0.005	<0.005		<0.005	<0.005	<0.005	
	09/16/13	8260B	0.045	0.011	0.1	0.084	0.11			<0.03*	0.012	<0.01		0.039	0.01	<0.01	
	09/16/13	8260B	0.09	0.022	0.12	0.097	0.13			<0.03*	<0.01	<0.01		0.031	<0.01	<0.01	
	08/23/12	8260B	0.054	0.016	0.11	0.11	0.17			<0.03*	0.018	<0.01		0.068	0.013	<0.01	
	10/04/11	8260B	0.13	0.046	0.17	0.11	0.16			<0.03*	0.017	0.01		0.04		<0.01	

8.11.4 RW-1, RW-2, RW-5, RW-6

Volatile Organic Compounds Analytical Result Summary

			PARAMETERS														
STANDARDS			1,2,4-Trimethyl benzene (mg/L)	1,3,5-Trimethyl benzene (mg/L)	Naphthalene (mg/L)	1-Methyl naphthalene (mg/L)	2-Methyl naphthalene (mg/L)	Acetone (mg/L)	2-Butanone (mg/L)	Chloro methane (mg/L)	Isopropyl benzene (mg/L)	4-Isopropyl toluene (mg/L)	n-Butyl benzene (mg/L)	n-Propyl benzene (mg/L)	Sec-butyl benzene (mg/L)	Styrene (mg/L)	tert-Butyl benzene (mg/L)
WQCC 20 NMAC 6.2.3103 (DEC 2018)			NE	NE	**0.03**	NE	NE	NE	NE	NE	NE	NE	NE	NE	NE	**0.1**	NE
40 CFR 141.61 MCL			NE	NE	NE	NE	NE	NE	NE	NE	NE	NE	NE	NE	NE	0.1	NE
NMED TAP WATER (JUNE 2019)			NE	NE	0.00165	**0.0114**	**0.035**	**14.06**	**5.56**	**0.0203**	**0.447**	NE	NE	NE	NE	1.21	NE
EPA RSL for Tap Water (NOVEMBER 2019)			**0.056**	**0.060**	0.00017	0.0011	0.036	14	5.6	0.19	0.45	NE	**1**	**0.66**	**2**	1.2	**0.69**
WELL ID	DATE SAMPLED	METHOD															
RW-6 [2]	4th Qtr 2018 - 2019	--	Did not gauge or sample - recovery apparatus installed														
	2nd Qtr 2017 - 3rd Qtr 2018	--	Not Sampled - SPH Detected														
	03/16/17	8260B	**0.061**	**0.13**	**0.59**	**0.27**	**0.29**	<0.1	<0.1	*<0.03**	0.044	0.01	0.022	0.096	0.012	<0.01	<0.01
	11/16/16	8260B	**0.06**	**0.1**	**0.61**	**0.33**	**0.35**	<0.1	<0.1	*<0.03**	0.024	0.011	0.015	0.048	0.0088	<0.01	0.0014
	09/13/16	8260B	**0.064**	**0.12**	**0.55**	**0.28**	**0.37**	<0.1	0.0093	*<0.03**	0.028	0.014	0.02	0.055	0.011	<0.01	
	06/07/16	8260B	**0.074**	**0.12**	**0.54**	**0.31**	**0.38**	<0.1	<0.1	*<0.03**	0.025	0.012	0.029	0.054	0.01	<0.01	
	03/07/16	8260B	**0.075**	**0.13**	**0.59**	**0.28**	**0.33**	0.035	0.014	*<0.03**	0.012	0.0048	0.014	0.032	0.01	<0.005	
	10/29/15	8260B	**0.09**	**0.1**	**0.68**	**0.32**	**0.41**			*<0.03**	0.025	0.01		0.044	<0.01	<0.01	
	08/23/15	8260B	**0.095**	**0.11**	**0.41**	**0.22**	**0.29**			*<0.03**	<0.01	0.01		0.012	<0.01	<0.01	
	09/18/14	8260B	**0.17**	**0.17**	**0.57**	**0.19**	**0.28**			*<0.03**	0.045	0.011		0.11	0.011	<0.01	
	09/16/13	8260B	**0.28**	**0.14**	**0.48**	**0.2**	**0.27**			*<0.15**	<0.05	<0.05		<0.05	<0.05	<0.05	
	08/23/12	8260B	**0.38**	**0.17**	**0.58**	**0.22**	**0.36**			*<0.15**	<0.05	<0.05		0.074	<0.05	<0.05	
	10/04/11	8260B	**0.42**	**0.16**	**0.52**	**0.21**	**0.31**			*<0.03**	0.043	0.015		0.078		<0.01	

DEFINITIONS

NA = Not analyzed; NE = Not established

Bold and highlighted values represent values above the applicable standards

STANDARDS

WQCC 20 NMAC 6.2.3103 - Standards for Ground Water of 10,000 mg/l TDS Concentration or Less.

a) Human Health Standards; b) Other Standards for Domestic Water

40 CFR 141.61 Maximum Contaminant Levels for Organic Contaminants

NMED Risk Assessment Guidance for Investigations and Remediations Table A-1

EPA Regional Screening Level (RSL) Summary Table

NOTES

Wells marked in red were not sampled because of SPH or recovery appartus was present

Items notes with a * and italics have a detection limit greater than or equal to the applicable standard.

2) Recovery wells added to the approved 2010 FWGWMP (8/25/10) annual sampling schedule.

8.11.5 RW-1, RW-2, RW-5, RW-6

Semi-Volatile Organic Compounds Analytical Result Summary

STANDARDS			PARAMETERS											
			Aniline (mg/L)	Benzoic Acid (mg/L)	Benzyl Alcohol (mg/L)	2,4-Dimethyl phenol (mg/L)	2-Methyl naphthalene (mg/L)	1-Methyl naphthalene (mg/L)	2-Methyl phenol (mg/L)	3+4-Methyl phenol (mg/L)	Naphthalene (mg/L)	Phenanthrene (mg/L)	Phenol (mg/L)	Pyridine (mg/L)
WQCC 20 NMAC 6.2.3103 (DEC 2018)			NE	NE	NE	NE	NE	NE	NE	NE	**0.03**	NE	**0.005**	NE
40 CFR 141.61 MCL			NE	NE	NE	NE	NE	NE	NE	NE	NE	NE	NE	NE
NMED TAP WATER (JUNE 2019)			NE	NE	NE	**0.354**	**0.035**	**0.0114**	NE	NE	0.00165	**0.17**	5.76	NE
EPA RSL for Tap Water (NOVEMBER 2019)			**0.013**	**75**	**2**	0.36	0.036	0.0011	**0.93**	**0.93**	0.00017	NE	5.8	**0.02**
WELL ID	DATE SAMPLED	METHOD												
RW-1 [2]	4th Qtr 2018 - 2019	--	Did not gauge or sample - recovery apparatus installed											
	3rd Qtr 2018 - 2015	--	Not Sampled - SPH Detected											
	9/18/2014	8270C	**0.021**	<0.02	<0.01	0.037	**0.061**	**0.071**	0.05	0.062	**0.13**	<0.01	**0.044**	<0.01
	9/16/2013	8270C	**0.089**	<0.04	<0.01	0.087	**0.21**	**0.19**	0.14	0.15	**0.43**	0.011	**0.1**	<0.01
	8/23/2012	8270C	**0.16**	<0.2	<0.1	0.21	**0.61**	**0.3**	0.24	0.16	**0.89**	0.02	**0.11**	**0.031**
	10/3/2011	8270C	*<0.1**	<0.2	<0.1	<0.1	**1.1**	**0.5**	<0.1	<0.1	**1.3**	<0.1	*<0.1**	
RW-2 [1]	4th Qtr 2018 - 2019	--	Did not gauge or sample - recovery apparatus installed											
	2017 - 3rd Qtr 2018	--	Samples were not collected for 8270C analysis.											
	9/18/2014	8270C	**0.14**	<0.02	<0.01	0.084	<0.01	**0.068**	0.032	0.22	**0.065**	<0.01	**0.061**	
	9/16/2013	8270C	**0.22**	<0.04	<0.01	0.15	<0.01	**0.061**	0.048	0.22	**0.065**	<0.01	**0.095**	
	8/24/2012	8270C	**0.21**	<0.02	<0.01	0.22	<0.01	**0.043**	0.028	0.025	**0.043**	<0.01	**0.091**	
	10/3/2011	8270C	**0.15**	0.021	<0.01	0.16	<0.01	**0.023**	0.09	0.032	**0.026**	<0.01	**0.038**	
RW-5 [1]	4th Qtr 2018 - 2019	--	Did not gauge or sample - recovery apparatus installed											
	2nd Qtr 2017 - 3rd Qtr 2018	--	Not Sampled - SPH Detected											
	3/16/2017	--	Samples were not collected for 8270C analysis.											
	9/18/2014	8270C	<0.01	<0.02	<0.01	<0.01	**0.044**	**0.039**	<0.02	<0.01	**0.039**	<0.01	*<0.01**	
	9/16/2013	8270C	<0.01	<0.04	<0.01	<0.01	**0.062**	**0.056**	<0.01	<0.01	**0.066**	<0.01	**0.018**	
	8/23/2012	8270C	<0.01	<0.02	<0.01	<0.01	**0.11**	**0.088**	<0.01	<0.01	**0.079**	<0.01	*<0.01**	
	10/4/2011	8270C	<0.01	<0.02	<0.01	<0.01	**0.13**	**0.1**	<0.01	<0.01	**0.11**	<0.01	*<0.01**	

8.11.5 RW-1, RW-2, RW-5, RW-6

Semi-Volatile Organic Compounds Analytical Result Summary

STANDARDS			PARAMETERS											
			Aniline (mg/L)	Benzoic Acid (mg/L)	Benzyl Alcohol (mg/L)	2,4-Dimethyl phenol (mg/L)	2-Methyl naphthalene (mg/L)	1-Methyl naphthalene (mg/L)	2-Methyl phenol (mg/L)	3+4-Methyl phenol (mg/L)	Naphthalene (mg/L)	Phenanthrene (mg/L)	Phenol (mg/L)	Pyridine (mg/L)
WQCC 20 NMAC 6.2.3103 (DEC 2018)			NE	NE	NE	NE	NE	NE	NE	NE	**0.03**	NE	**0.005**	NE
40 CFR 141.61 MCL			NE	NE	NE	NE	NE	NE	NE	NE	NE	NE	NE	NE
NMED TAP WATER (JUNE 2019)			NE	NE	NE	**0.354**	**0.035**	**0.0114**	NE	NE	0.00165	**0.17**	5.76	NE
EPA RSL for Tap Water (NOVEMBER 2019)			**0.013**	**75**	**2**	0.36	0.036	0.0011	**0.93**	**0.93**	0.00017	NE	5.8	**0.02**
WELL ID	**DATE SAMPLED**	**METHOD**												
RW-6 [2]	4th Qtr 2018 - 2019	--	Did not gauge or sample - recovery apparatus installed											
	2nd Qtr 2017 - 3rd Qtr 2018	--	Not Sampled - SPH Detected											
	3/16/2017	--	Samples were not collected for 8270C analysis.											
	9/18/2014	8270C	<0.01	<0.02	<0.01	<0.01	**0.19**	**0.17**	<0.02	<0.01	**0.35**	<0.01	*<0.01**	
	9/16/2013	8270C	<0.01	<0.04	<0.01	<0.01	**0.51**	**0.44**	<0.01	<0.01	**0.66**	<0.01	*<0.01**	
	8/23/2012	8270C	<0.01	<0.02	<0.01	<0.01	**0.65**	**0.49**	<0.01	<0.01	**0.55**	<0.01	*<0.01**	
	10/4/2011	8270C	*<0.1**	<0.2	<0.1	<0.1	**0.59**	**0.42**	<0.1	<0.1	**0.46**	<0.1	*<0.1**	

DEFINITIONS

NA = Not analyzed; NE = Not established

Bold and highlighted values represent values above the applicable standards

STANDARDS

WQCC 20 NMAC 6.2.3103 - Standards for Ground Water of 10,000 mg/l TDS Concentration or Less.

a) Human Health Standards; b) Other Standards for Domestic Water

40 CFR 141.61 Maximum Contaminant Levels for Organic Contaminants

NMED Risk Assessment Guidance for Investigations and Remediations Table A-1

EPA Regional Screening Level (RSL) Summary Table

NOTES

Wells marked in red were not sampled because of SPH or recovery appartus was present

Items notes with a * and italics have a detection limit greater than or equal to the applicable standard.

2) Recovery wells added to the approved 2010 FWGWMP (8/25/10) annual sampling schedule.

8.12 OW-1, OW-10

BTEX and MTBE Analytical Result Summary

STANDARDS			PARAMETERS				
			Benzene (mg/L)	Toluene (mg/L)	Ethylbenzene (mg/L)	Total Xylenes (mg/L)	MTBE (mg/L)
WQCC 20 NMAC 6.2.3103 (DEC 2018)			0.005	1	0.7	0.62	0.1
40 CFR 141.61 MCL			0.005	1.0	0.7	10	NE
NMED Tap Water (Rev 2. JUN 2019)			0.00455	1.09	0.0149	0.193	0.143
EPA RSL for Tap Water (NOV 2019)			0.0046	1.1	0.0015	0.19	0.14
WELL ID	DATE SAMPLED	METHOD					
OW-1	10/16/19	8260B	<0.001	<0.001	<0.001	<0.0015	0.0017
	08/15/19	8260B	<0.001	<0.001	<0.001	<0.0015	0.0019
	05/21/19	8260B	<0.001	<0.001	<0.001	<0.0015	0.0022
	03/27/19	8260B	<0.001	<0.001	<0.001	<0.0015	0.0073
	11/08/18	8260B	0.00058	<0.001	0.00023	<0.0015	0.0018
	09/11/18	8260B	<0.001	<0.001	<0.001	<0.0015	0.0019
	05/15/18	8260B	<0.001	<0.001	<0.001	<0.0015	0.002
	02/27/18	8260B	<0.001	<0.001	<0.001	<0.0015	0.0011
	12/08/17	8260B	<0.001	<0.001	<0.001	<0.0015	0.0014
	09/07/17	8260B	<0.001	<0.001	<0.001	<0.0015	0.002
	05/31/17	8260B	<0.001	<0.001	<0.001	<0.0015	0.0016
	02/27/17	8260B	<0.001	<0.001	<0.001	<0.0015	0.0014
	11/15/16	8260B	0.0016	<0.001	0.00039	<0.0015	0.00088
	09/06/16	8260B	<0.001	<0.001	<0.001	<0.0015	0.00088
	06/06/16	8290B	0.00013	<0.001	<0.001	<0.0015	0.001
	03/03/16	8260B	<0.001	<0.001	<0.001	<0.0015	0.00074
	10/28/15	8260B	0.0014	0.0024	<0.001	0.0022	0.0016
	08/12/15	8260B	<0.002	<0.002	<0.002	<0.003	<0.002
	06/03/15	8260B	<0.001	<0.001	<0.001	<0.0015	<0.001
	03/09/15	8260B	<0.001	<0.001	<0.001	<0.0015	<0.001
	11/10/14	8260B	<0.001	<0.001	<0.001	<0.0015	<0.001
	09/11/14	8260B	<0.002	<0.002	<0.002	<0.003	<0.002
	06/03/14	8260B	<0.001	<0.001	<0.001	<0.0015	<0.001
	03/07/14	8260B	<0.001	<0.001	<0.001	<0.0015	<0.001
	11/11/13	8260B	<0.001	<0.001	<0.001	<0.0015	<0.001
	09/04/13	8260B	<0.001	<0.001	<0.001	<0.0015	<0.001
	06/13/13	8260B	<0.001	<0.001	<0.001	<0.0015	<0.001
	03/19/13	8260B	<0.001	<0.001	<0.001	<0.0015	<0.001
	11/27/12	8260B	<0.001	<0.001	<0.001	<0.0015	<0.001
	08/22/12	8260B	<0.001	<0.001	<0.001	<0.0015	<0.001
	06/13/12	8260B	<0.001	<0.001	<0.001	<0.0015	<0.001
	03/22/12	8260B	<0.001	<0.001	<0.001	<0.0015	<0.001
	12/15/11	8260B	<0.001	<0.001	<0.001	<0.0015	<0.001
	10/27/11	8260B	<0.001	<0.001	<0.001	<0.0015	<0.001
	06/20/11	8260B	<0.001	<0.001	<0.001	<0.0015	<0.001
	03/01/11	8260B	<0.001	<0.001	<0.001	<0.0015	<0.001
	11/10/10	8260B	<0.001	<0.001	<0.001	<0.0015	<0.001
	09/21/10	8260B	<0.001	<0.001	<0.001	<0.0015	<0.001
	03/15/10	8021B	<0.001	<0.001	<0.001	<0.0015	<0.001

8.12 OW-1, OW-10

BTEX and MTBE Analytical Result Summary

STANDARDS			PARAMETERS				
			Benzene (mg/L)	Toluene (mg/L)	Ethylbenzene (mg/L)	Total Xylenes (mg/L)	MTBE (mg/L)
WQCC 20 NMAC 6.2.3103 (DEC 2018)			**0.005**	**1**	**0.7**	**0.62**	**0.1**
40 CFR 141.61 MCL			0.005	1.0	0.7	10	NE
NMED Tap Water (Rev 2. JUN 2019)			0.00455	1.09	0.0149	0.193	0.143
EPA RSL for Tap Water (NOV 2019)			0.0046	1.1	0.0015	0.19	0.14
WELL ID	**DATE SAMPLED**	**METHOD**					
OW-10	10/17/19	8260B	<0.001	<0.001	<0.001	<0.0015	0.01
	08/15/19	8260B	<0.001	<0.001	<0.001	<0.0015	0.01
	05/28/19	8260B	<0.001	<0.001	<0.001	<0.0015	0.0092
	03/27/19	8260B	<0.001	<0.001	<0.001	<0.0015	0.0015
	11/08/18	8260B	<0.001	<0.001	<0.001	<0.0015	0.015
	09/11/18	8260b	<0.001	<0.001	<0.001	<0.0015	0.019
	05/15/18	8260B	<0.001	<0.001	<0.001	<0.0015	0.023
	02/27/18	8260B	<0.001	<0.001	<0.001	<0.0015	0.027
	12/07/17	8260B	<0.001	<0.001	<0.001	<0.0015	0.027
	09/07/17	8260B	<0.001	<0.001	<0.001	<0.0015	0.020
	05/31/17	8260B	<0.001	<0.001	<0.001	<0.0015	0.022
	02/27/17	8260B	<0.001	<0.001	<0.001	<0.0015	0.019
	11/15/16	8260B	<0.001	<0.001	<0.001	<0.0015	0.028
	09/06/16	8260B	<0.001	<0.001	<0.001	<0.0015	0.035
	06/06/16	8260B	<0.001	<0.001	<0.001	<0.0015	0.033
	03/03/16	8260B	<0.001	<0.001	<0.001	<0.0015	0.039
	10/28/15	8260B	<0.001	0.0023	0.0011	0.0042	0.051
	08/12/15	8260B	<0.001	<0.001	<0.001	<0.0015	0.058
	06/03/15	8260B	<0.001	<0.001	<0.001	<0.0015	0.055
	03/09/15	8260B	<0.001	<0.001	<0.001	<0.0015	0.061
	11/10/14	8260B	<0.001	<0.001	<0.001	<0.0015	0.098
	09/12/14	8260B	<0.001	<0.001	<0.001	<0.0015	**0.11**
	06/03/14	8260B	<0.001	<0.001	<0.001	<0.0015	0.092
	03/07/14	8260B	<0.001	<0.001	<0.001	<0.0015	0.079
	11/11/13	8260B	<0.001	<0.001	<0.001	<0.0015	0.062
	09/04/13	8260B	<0.001	<0.001	<0.001	<0.0015	0.065
	06/13/13	8260B	<0.001	<0.001	<0.001	<0.0015	**0.22**
	03/19/13	8260B	<0.001	<0.001	<0.001	<0.0015	**0.17**
	11/27/12	8260B	<0.001	<0.001	<0.001	<0.0015	**0.23**
	08/22/12	8260B	<0.001	<0.001	<0.001	<0.0015	0.044
	06/13/12	8260B	<0.001	<0.001	<0.001	<0.0015	**0.13**
	03/22/12	8260B	<0.001	<0.001	<0.001	<0.0015	0.031
	12/15/11	8260B	<0.001	<0.001	<0.001	<0.0015	0.058
	10/26/11	8260B	<0.001	<0.001	<0.001	<0.0015	0.038
	06/20/11	8260B	<0.001	<0.001	<0.001	<0.0015	0.046
	02/28/11	8260B	<0.001	<0.001	<0.001	<0.0015	0.036
	11/10/10	8260B	<0.001	<0.001	<0.001	<0.0015	0.036
	09/21/10	8260B	<0.001	<0.001	<0.001	<0.0015	0.037
	03/15/10	8260B	<0.001	<0.001	<0.001	<0.0015	0.033

DEFINITIONS

NA = Not analyzed; NE = Not established

Bold and highlighted values represent values above the applicable standards

WQCC 20 NMAC 6.2.3103 - Standards for Ground Water of 10,000 mg/l TDS Concentration or Less.

a) Human Health Standards; b) Other Standards for Domestic Water

40 CFR 141.61 Maximum Contaminant Levels for Organic Contaminants

NMED Risk Assessment Guidance for Investigations and Remediations Table A-1

EPA Regional Screening Level (RSL) Summary Table

8.12.1 OW-1, OW-10

General Chemistry and DRO/GRO/MRO Analytical Result Summary

			PARAMETERS							
		STANDARDS	Fluoride (mg/L)	Chloride (mg/L)	Nitrite (mg/L)	Nitrate (mg/L)	Sulfate (mg/L)	DRO (mg/L)	GRO (mg/L)	MRO (mg/L)
		WQCC 20 NMAC 6.2.3103 (DEC 2018)	**1.6**	**250.0**	**1**	**10**	**600.0**	NE	NE	NE
		40 CFR 141.62 MCL	4.0	NE	1	10	NE	NE	NE	NE
		NMED Tap Water (Rev 2. JUN 2019)	1.18	NE	1.97	31.60	NE	NE	NE	NE
		EPA RSL for Tap Water (NOV 2019)	0.8	NE	2	32	NE	NE	NE	NE
		NMED SSG (JUNE 2019)	NE	NE	NE	NE	NE	**0.0167**	**0.0101**	**0.0858**
WELL ID	**DATE SAMPLED**	**METHOD**								
OW-1	10/16/19	300.0/8015D	0.27	100	0.24	0.24	170	*<1.0**	*<0.05**	*<5.0**
	08/15/19	300.0/8015D	0.26	110	<0.5	0.26	170	*<1.0**	*<0.05**	*<5.0**
	05/21/19	300.0/8015D	0.31	110	<0.5	0.34	180	*<1.0**	*<0.05**	*<5.0**
	03/27/19	300.0/8015D	0.29	98	<0.5	0.3	170	*<1.0**	*<0.05**	*<5.0**
	11/08/18	300.0/8015D	<0.5	110	0.071	0.34	170	*<1.0**	*<0.05**	*<5.0**
	09/11/18	300.0/8015D	0.19	110	0.28	0.28	160	*<1.0**	*<0.05**	*<5.0**
	05/15/18	300.0/8015D	0.11	110	0.35	0.35	140	*<1.0**	*<0.05**	*<5.0**
	02/27/18	300.0/8015D	<0.5	94	0.36	0.36	170	*<1.0**	*<0.05**	*<5.0**
	12/08/17	300.0/8015D	0.23	96	0.28	0.28	170	*<1.0**	**0.012**	*<5.0**
	09/07/17	300.0/8015D	<0.50	110	0.34	0.34	170	*<1.0**	*<0.05**	*<5.0**
	05/31/17	300.0/8015D	0.18	91	0.28	0.28	160	*<1.0**	*<0.05**	*<5.0**
	02/27/17	300.0/8015D	0.21	86	<0.10	0.28	160	*<1.0**	*<0.05**	*<5.0**
	11/15/16	300.0/8015D	0.25	81	*<1.0**	0.29	160	*<1.0**	*<0.05**	*<5.0**
	09/06/16	300.0/8015D	<0.5	83	0.72	0.72	180	*<1.0**	*<0.05**	*<5.0**
	06/06/16	300.0/8015D	0.24	74	0.49	0.49	170	*<1.0**	*<0.05**	*<5.0**
	03/03/16	300.0/8015D	0.27	70	<0.1	0.25	160	*<1.0**	*<0.05**	*<5.0**
	10/08/15	300.0/8015B	0.25	71	*<1.0**	<1.0	160	*<1.0**	*<0.05**	*<5.0**
	08/12/15	300.0/8015D	0.29	68	*<1.0**	<1.0	160	*<1.0**	*<0.1**	*<5.0**
	06/03/15	300.0/8015D	<0.5	77	*<1.0**	<1.0	190	*<1.0**	*<0.05**	*<5.0**
	03/09/15	300.0/8015D	0.23	67	*<1.0**	<1.0	170	*<1.0**	*<0.05**	*<5.0**
	11/10/14	300.0/8015B	0.3	72	<0.1	0.3	170	*<1.0**	*<0.05**	*<5.0**
	09/11/14	300.0/8015B	<0.5	60	*<1.0**	<1.0	150	*<1.0**	*<0.05**	*<5.0**
	06/03/14	300.0/8015B	0.26	66	*<1.0**	<1.0	160	*<1.0**	*<0.05**	*<5.0**
	03/07/14	300.0/8015B	0.3	65	*<1.0**	<1.0	170	*<1.0**	*<0.05**	*<5.0**
	11/11/13	300.0/8015B	0.28	65	**4.7**	4.7	170	*<1.0**	*<0.05**	NA
	09/04/13	300.0/8015B	0.3	66	**29**	**29**	180	*<1.0**	*<0.05**	*<5.0**
	06/13/13	300.0/8015B	<1.0	61	*<1.0**	<1.0	180	*<1.0**	*<0.05**	*<5.0**
	03/19/13	300.0/8015B	<0.5	70	*<1.0**	<1.0	200	*<1.0**	*<0.05**	*<5.0**
	11/27/12	300.0/8015B	<0.5	72	*<1.0**	<1.0	180	*<1.0**	*<0.05**	*<5.0**
	08/22/12	300.0/8015B	0.24	62	*<1.0**	<1.0	170	*<1.0**	*<0.05**	*<5.0**
	06/13/12	300.0/8015B	0.34	61	*<1.0**	<1.0	180	*<1.0**	*<0.05**	*<5.0**
	03/22/12	300.0/8015B	0.34	62	<0.1	0.33	170	*<1.0**	*<0.05**	*<5.0**
	12/15/11	300.0/8015B	0.31	63	*<1.0**	<1.0	180	*<1.0**	*<0.05**	NL
	10/27/11	300.0/8015B	0.3	65	*<1.0**	<1.0	180	NL	*<0.05**	*<5.0**
	06/20/11	300.0/8015B	0.33	64	<0.1	0.5	180	*<1.0**	*<0.05**	*<1.0**
	03/01/11	300.0/8015B	0.29	68	**1.1**	1.1	180	*<1.0**	*<0.05**	
	11/10/10	300.0/8015B	0.31	64	*<1.0**	<1.0	180	*<1.0**	*<0.05**	
	09/10/10	300.0/8015B	0.32	60	*<1.0**	<1.0	190	*<1.0**	*<0.05**	
	03/15/10	300.0/8015B	0.33	58	**4.1**	4.1	190	*<1.0**	*<0.05**	

8.12.1 OW-1, OW-10

General Chemistry and DRO/GRO/MRO Analytical Result Summary

			PARAMETERS							
		STANDARDS	Fluoride (mg/L)	Chloride (mg/L)	Nitrite (mg/L)	Nitrate (mg/L)	Sulfate (mg/L)	DRO (mg/L)	GRO (mg/L)	MRO (mg/L)
		WQCC 20 NMAC 6.2.3103 (DEC 2018)	**1.6**	**250.0**	**1**	**10**	**600.0**	NE	NE	NE
		40 CFR 141.62 MCL	4.0	NE	1	10	NE	NE	NE	NE
		NMED Tap Water (Rev 2. JUN 2019)	1.18	NE	1.97	31.60	NE	NE	NE	NE
		EPA RSL for Tap Water (NOV 2019)	0.8	NE	2	32	NE	NE	NE	NE
		NMED SSG (JUNE 2019)	NE	NE	NE	NE	NE	**0.0167**	**0.0101**	**0.0858**
WELL ID	**DATE SAMPLED**	**METHOD**								
OW-10	10/17/19	300.0/8015D	0.16	**1100**	<0.5	0.75	230	*<1.0**	*<0.05**	*<5.0**
	08/15/19	300.0/8015D	0.19	**860**	<0.5	0.75	220	*<1.0**	*<0.05**	*<5.0**
	05/28/19	300.0/8015D	<0.5	**530**	<0.5	0.87	180	*<1.0**	*<0.05**	*<5.0**
	03/27/19	300.0/8015D	<0.5	**460**	<0.5	0.94	230	*<1.0**	*<0.05**	*<5.0**
	11/08/18	300.0/8015D	<0.5	**860**	0.23	0.94	220	*<1.0**	*<0.05**	*<5.0**
	09/11/18	300.0/8015D	<0.5	**830**	<0.5	1	250	*<1.0**	*<0.05**	*<5.0**
	05/15/18	300.0/8015D	<0.1	**850**	0.89	0.89	200	*<1.0**	*<0.05**	*<5.0**
	02/27/18	300.0/8015D	<0.5	**390**	**1.2**	1.2	220	*<1.0**	**0.026**	*<5.0**
	12/07/17	300.0/8015D	<0.5	**650**	0.76	0.76	230	*<1.0**	**0.022**	*<5.0**
	09/07/17	300.0/8015D	<0.5	**740**	0.59	0.59	210	*<1.0**	**0.036**	*<5.0**
	05/31/17	300.0/8015D	0.063	**870**	0.47	0.47	180	*<1.0**	**0.027**	*<5.0**
	02/27/17	300.0/8015D	0.14	**440**	*<2.0**	0.55	180	*<1.0**	*<0.05**	*<5.0**
	11/15/16	300.0/8015D	0.2	**550**	*<1.0**	<0.5	190	*<1.0**	**0.04**	*<5.0**
	09/06/16	300.0/8015D	<0.5	**1100**	*<1.0**	<1.0	230	*<1.0**	*<0.05**	*<5.0**
	06/06/16	300.0/8015D	0.22	**960**	0.49	0.49	200	*<1.0**	**0.047**	*<5.0**
	03/03/16	300.0/8015D	0.2	**1100**	*<2.0**	0.4	200	*<1.0**	**0.046**	*<5.0**
	10/28/15	300.0/8015B	<0.1	**1500**	*<1.0**	<1.0	220	*<1.0**	*<0.05**	*<5.0**
	08/12/15	300.0/8015D	<0.1	**1900**	*<1.0**	<1.0	240	*<1.0**	**0.064**	*<5.0**
	06/03/15	300.0/8015D	<0.5	**1500**	*<1.0**	<1.0	240	*<1.0**	**0.067**	*<5.0**
	03/09/15	300.0/8015D	0.22	**840**	*<1.0**	<1.0	200	*<1.0**	*<0.05**	*<5.0**
	11/10/14	300.0/8015B	0.2	**1600**	*<2.0**	0.22	200	*<1.0**	**0.087**	*<5.0**
	09/12/14	300.0/8015B	0.12	**1500**	*<1.0**	<1.0	200	*<1.0**	**0.064**	*<5.0**
	06/03/14	300.0/8015B	<0.1	**1500**	*<4.0**	<4.0	200	*<1.0**	**0.069**	*<5.0**
	03/07/14	300.0/8015B	0.2	**1200**	*<1.0**	<1.0	190	*<1.0**	*<0.05**	*<5.0**
	11/11/13	300.0/8015B	0.17	**850**	**1.3**	1.3	150	*<1.0**	**0.055**	NA
	09/04/13	300.0/8015B	0.19	**1200**	**11**	**11**	180	*<1.0**	**0.051**	*<5.0**
	06/13/13	300.0/8015B	<1.0	**2400**	*<1.0**	<1.0	250	*<1.0**	**0.15**	*<5.0**
	03/19/13	300.0/8015B	<0.5	**1700**	*<1.0**	<1.0	230	*<1.0**	**0.11**	*<5.0**
	11/27/12	300.0/8015B	<0.5	**2100**	*<4.0**	<4.0	240	*<1.0**	**0.13**	*<5.0**
	08/22/12	300.0/8015B	0.34	**280**	*<1.0**	<1.0	130	*<1.0**	*<0.05**	*<5.0**
	06/13/12	300.0/8015B	0.31	**980**	*<1.0**	<1.0	160	*<1.0**	**0.14**	*<5.0**
	03/22/12	300.0/8015B	0.41	**260**	<0.1	0.59	140	*<1.0**	**0.062**	*<5.0**
	12/15/11	300.0/8015B	0.31	**420**	*<1.0**	<1.0	150	*<1.0**	**0.084**	*<5.0**
	10/26/11	300.0/8015B	0.34	**500**	*<2.0**	0.38	140	NL	*<0.05**	NL
	06/20/11	300.0/8015B	<0.50	**300**	*<2.0**	0.52	140	*<1.0**	**0.053**	*<5.0**
	02/28/11	300.0/8015B	0.34	**490**	**1.1**	1.1	140	*<1.0**	**0.062**	*<5.0**
	11/10/10	300.0/8015B	0.38	**450**	*<1.0**	<1.0	150	<0.001	*<0.05**	
	09/21/10	300.0/8015B	0.35	**790**	*<1.0**	<1.0	160	<0.001	*<0.05**	
	03/15/10	300.0/8015B	0.4	**390**	**2.2**	2.2	150	<0.001	**0.064**	

DEFINITIONS

NA = Not analyzed; NE = Not established

Bold and highlighted values represent values above the applicable standards

STANDARDS

WQCC 20 NMAC 6.2.3103 - Standards for Ground Water of 10,000 mg/l TDS Concentration or Less.

a) Human Health Standards; b) Other Standards for Domestic Water

40 CFR 141.62 Detection Limits for Inorganic Contaminants

NMED Risk Assessment Guidance for Investigations and Remediations Table A-1

EPA Regional Screening Level (RSL) Summary Table

NMED Soil Screening Guidance Volume 1, Table 6-4 (groundwater)

NOTES

Items notes with a * and italics have a detection limit greater than or equal to the applicable standard.

Items highlighted were analyzed by nitrogen, nitrate & nitrite and the result is reported for both.

8.12.2 OW-1, OW-10

Total Metals Analytical Result Summary

			PARAMETERS											
STANDARDS			Arsenic (mg/L)	Barium (mg/L)	Cadmium (mg/L)	Chromium (mg/L)	Iron (mg/L)	Lead (mg/L)	Manganese (mg/L)	Selenium (mg/L)	Silver (mg/L)	Uranium (mg/L)	Mercury (ug/L)	Zinc (mg/L)
WQCC 20 NMAC 6.2.3103 (DEC 2018)			**0.1**	**2**	**0.005**	**0.05**	**1**	**0.015**	**0.2**	**0.05**	**0.05**	**0.03**	**2**	**10**
40 CFR 141.62 MCL			0.01	2.0	0.005	0.1	NE	0.015	NE	0.05	NE	0.03	2	NE
NMED Tap Water (Rev 2. JUN 2019)			0.000855	3.28	0.00624	0.0057	13.8	NE	2.02	0.0987	0.0812	0.0592	0.626	5.96
EPA RSL for Tap Water (NOV 2019)			0.000052	3.8	0.0092	22	14	0.015	0.43	0.1	0.094	0.004	0.63	6
WELL ID	DATE SAMPLED	METHOD												
OW-1	10/16/19	200.7/200.8	<0.005	0.036	<0.002	0.0021	0.034	<0.0005	0.00078	0.0025	<0.005	**0.04**	<0.2	<0.01
	08/15/19	200.7/200.8	0.003	0.16	<0.002	0.0064	**7.7**	0.012	**0.33**	0.0046	<0.005	**0.038**	<0.2	0.083
	05/21/19	200.7/2008	0.00067	0.037	<0.002	<0.006	0.023	<0.0005	0.0026	0.0024	<0.005	**0.034**	<0.2	<0.01
	03/27/19	200.7/200.8	0.00073	0.036	<0.002	0.0013	0.17	0.00021	0.011	0.0025	<0.005	**0.037**	0.14	<0.01
	11/08/18	200.7/200.8	0.00078	0.043	<0.002	0.0023	0.31	0.00034	0.02	0.0028	<0.005	**0.031**	0.089	0.0038
	09/11/18	200.7/200.8	<0.005	0.072	<0.002	0.024	<0.006	0.0033	0.11	<0.005	<0.005	**0.035**	0.081	0.022
	05/15/18	200.7/200.8	0.00081	0.04	<0.002	0.0029	0.27	0.00032	0.018	0.0023	<0.005	**0.035**	0.12	<0.01
	02/27/18	200.7/200.8	<0.005	0.038	0.00091	0.0018	0.11	<0.0005	0.0077	0.0025	<0.005	**0.037**	0.048	0.0044
	12/08/17	200.7/200.8	0.00089	0.033	<0.002	<0.006	0.034	<0.0025	0.0051	<0.005	<0.005	**0.035**	<0.2	0.0044
	09/07/17	200.7/200.8	0.00085	0.041	<0.002	0.0037	0.42	0.00041	0.012	0.0031	<0.005	**0.037**	<0.2	0.0033
	05/31/17	200.7/200.8	0.00098	0.036	<0.002	<0.006	0.061	<0.0005	0.004	0.0033	<0.005	NA	<0.2	0.0028
	02/27/17	200.7/200.8	0.0029	0.20	<0.002	**0.099**	**9.8**	**0.017**	**0.38**	0.0033	<0.005	NA	<0.2	0.073
	11/15/16	200.7/200.8	<0.005	0.036	<0.002	<0.006	0.24	0.00013	0.0088	0.0042	0.0016	**0.039**	<0.2	0.025
	09/06/16	200.7/200.8	0.0031	0.17	<0.002	0.043	**9.2**	0.015	**0.35**	0.0041	<0.005	**0.045**	0.087	0.069
	06/06/16	200.7/200.8	0.0022	0.13	<0.002	0.014	<0.006	0.011	**0.22**	0.0047	<0.005	**0.041**	0.083	0.042
	03/03/16	200.7/200.8	0.0016	0.044	<0.002	0.0055	0.71	0.0012	0.034	0.0041	<0.005	**0.042**	0.057	0.021
	10/28/15	200.7/200.8	0.0038	0.18	<0.002	**0.056**	**11**	0.015	**0.42**	<0.005	<0.005	**0.042**	<0.2	0.06
	08/12/15	200.7/200.8	0.036	**2.1**	*<0.01**	**0.51**	**140**	**0.25**	**6.7**	<0.01	<0.005	**0.098**	<0.2	0.65
	06/03/15	200.7/200.8	<0.01	0.047	<0.002	<0.006	1	<0.005	0.05	<0.01	<0.005	**0.042**	<0.2	<0.01
	03/09/15	200.7/200.8	<0.005	0.04	<0.002	<0.006	0.54	<0.001	0.024	<0.005	<0.005	**0.042**	<0.2	<0.01
	11/10/14	200.7/200.8	<0.001	0.036	<0.002	<0.006	0.27	<0.001	0.0067	0.0029	<0.005	**0.043**	<0.2	<0.01
	09/11/14	200.7/200.8	0.013	0.56	<0.002	**0.12**	0.025	**0.078**	**1.7**	<0.01	<0.005	**0.066**	<0.2	0.19
	06/03/14	200.7/200.8	<0.005	0.034	<0.002	<0.006	**1.7**	0.003	0.073	<0.005	<0.005	**0.042**	<0.2	0.031
	03/07/14	200.7/200.8	<0.001	0.041	<0.002	<0.006	0.28	<0.001	0.02	0.0034	<0.005	**0.042**	<0.2	0.01
	11/11/13	200.7/200.8	0.0012	0.048	<0.002	<0.006	**1.2**	0.0019	0.053	0.0036	<0.005	**0.039**	<0.2	<0.01
	09/04/13	200.7/200.8	0.0011	0.037	<0.002	<0.006	0.37	<0.001	0.02	0.0035	<0.005	**0.043**	<0.2	<0.01
	06/13/13	200.7/200.8	0.0061	0.26	<0.002	0.028	0.19	NA	**0.82**	0.0042	<0.005	**0.052**	<0.2	0.07
	03/19/13	200.7/200.8	<0.0025	0.035	<0.002	<0.006	0.088	<0.005	0.0074	0.0032	<0.005	**0.044**	<0.2	<0.01
	11/27/12	200.7/200.8	<0.0025	0.035	<0.002	<0.006	<0.006	<0.005	0.013	0.0026	<0.005	**0.045**	<0.2	<0.01
	08/22/12	200.7/200.8	<0.0025	0.039	<0.002	<0.006	0.008	<0.005	0.027	0.0041	<0.005	**0.04**	<0.2	<0.01
	06/13/12	200.7/200.8	<0.0025	0.035	<0.002	<0.006	<0.006	<0.005	0.012	0.0042	<0.005	**0.039**	<0.2	<0.01
	03/22/12	200.7/200.8	<0.0025	0.045	<0.002	<0.006	<0.006	<0.005	0.058	0.0035	<0.005	**0.041**	<0.2	0.01
	12/15/11	200.7/200.8	<0.0025	0.066	<0.002	0.0072	**2.7**	<0.005	0.13	0.0037	<0.005	**0.046**	<0.2	0.25
	10/27/11	200.7/200.8	<0.0025	0.036	<0.002	<0.006	0.042	<0.005	0.013	0.0035	<0.005	**0.04**	<0.2	<0.01
	06/20/11	200.7/200.8	<0.0025	0.039	<0.002	<0.006	0.053	<0.005	0.016	0.0056	<0.005	**0.047**	<0.2	<0.01

8.12.2 OW-1, OW-10

Total Metals Analytical Result Summary

STANDARDS			PARAMETERS											
			Arsenic (mg/L)	Barium (mg/L)	Cadmium (mg/L)	Chromium (mg/L)	Iron (mg/L)	Lead (mg/L)	Manganese (mg/L)	Selenium (mg/L)	Silver (mg/L)	Uranium (mg/L)	Mercury (ug/L)	Zinc (mg/L)
WQCC 20 NMAC 6.2.3103 (DEC 2018)			**0.1**	**2**	**0.005**	**0.05**	**1**	**0.015**	**0.2**	**0.05**	**0.05**	**0.03**	**2**	**10**
40 CFR 141.62 MCL			0.01	2.0	0.005	0.1	NE	0.015	NE	0.05	NE	0.03	2	NE
NMED Tap Water (Rev 2. JUN 2019)			0.000855	3.28	0.00624	0.0057	13.8	NE	2.02	0.0987	0.0812	0.0592	0.626	5.96
EPA RSL for Tap Water (NOV 2019)			0.000052	3.8	0.0092	22	14	0.015	0.43	0.1	0.094	0.004	0.63	6
WELL ID	**DATE SAMPLED**	**METHOD**												
OW-1	03/01/11	200.7/200.8	<0.0025	0.038	<0.002	<0.006	0.058	<0.005	0.013	*<0.05**	<0.005	**0.053**	NA	<0.01
(continued)	11/10/10	6010B	<0.02	<0.02	<0.002	<0.006	<0.05	<0.005	0.0066	*<0.05**	<0.005	**0.039**	<0.2	<0.02
	09/21/10	6010B	<0.02	0.038	<0.002	<0.006	0.081	<0.005	0.023	*<0.05**	<0.005	**0.038**	<0.2	<0.02
	03/15/10	6010B	<0.02	0.031	<0.002	<0.006	0.16	<0.005	0.012	*<0.05**	<0.005	**0.0394**	<0.2	<0.02
OW-10	10/16/19	200.7/200.8	<0.005	0.066	<0.002	<0.006	0.0099	<0.0025	0.15	0.0089	0.0039	**0.055**	<0.2	<0.01
	08/15/19	200.7/200.8	0.00077	0.054	<0.002	<0.006	<0.02	0.00013	0.088	0.0096	0.0018	**0.05**	<0.2	<0.01
	05/28/19	200.7/200.8	0.00075	0.049	<0.002	<0.006	0.01	0.00012	0.037	0.01	<0.005	**0.044**	<0.2	<0.01
	03/27/19	200.7/200.8	0.00052	0.043	<0.002	<0.006	<0.02	0.00014	0.035	0.0088	<0.005	**0.049**	0.11	<0.01
	11/08/18	200.7/200.8	0.0017	0.053	<0.002	<0.006	0.028	<0.0005	0.064	0.011	0.0026	**0.048**	0.079	<0.01
	09/11/18	200.7/200.8	0.0013	0.055	<0.002	<0.006	0.013	<0.0005	0.084	0.01	0.0036	**0.054**	0.094	<0.01
	05/15/18	200.7/200.8	0.0017	0.054	<0.002	<0.006	<0.02	<0.0005	0.075	0.012	0.0014	**0.056**	0.098	<0.01
	02/27/18	200.7/200.8	0.0041	0.047	<0.002	<0.006	0.075	<0.0005	0.015	0.0096	0.0014	**0.05**	0.092	<0.01
	12/07/17	200.7/200.8	0.0023	0.049	<0.002	<0.006	<0.02	<0.0025	0.069	0.014	<0.005	**0.052**	<0.2	<0.01
	09/07/17	200.7/200.8	0.0022	0.059	<0.002	<0.006	0.018	0.00026	0.063	0.016	<0.005	**0.057**	<0.2	<0.01
	05/31/17	200.7/200.8	0.0018	0.057	<0.002	<0.006	<0.02	0.00023	0.075	0.0096	<0.005	NA	<0.2	<0.01
	02/27/17	200.7/200.8	0.002	0.042	<0.002	<0.006	<0.02	0.0002	0.040	0.011	<0.005	NA	<0.2	<0.01
	11/15/16	200.7/200.8	0.0021	0.047	<0.002	<0.006	<0.02	<0.0025	0.047	0.016	0.0027	**0.055**	0.062	<0.01
	09/06/16	200.7/200.8	0.0035	0.061	<0.002	<0.006	<0.02	0.00019	0.11	0.013	<0.005	**0.056**	0.058	<0.01
	06/06/16	200.7/200.8	0.0023	0.064	<0.002	<0.006	0.01	0.00024	0.11	0.015	<0.005	**0.057**	0.066	<0.01
	03/03/16	200.7/200.8	0.0015	0.068	<0.002	<0.006	<0.02	0.00026	0.11	0.013	0.0038	**0.06**	<0.2	<0.01
	10/28/15	200.7/200.8	<0.005	0.095	<0.002	<0.006	<0.02	<0.0025	**0.22**	0.013	<0.005	**0.061**	<0.2	<0.01
	08/12/15	200.7/200.8	<0.005	0.11	<0.002	<0.006	0.038	<0.0005	**0.33**	0.011	<0.005	**0.064**	<0.2	0.011
	06/03/15	200.7/200.8	<0.01	0.095	<0.002	<0.006	<0.02	<0.005	0.15	<0.02	<0.005	**0.063**	<0.2	<0.01
	03/09/15	200.7/200.8	<0.005	0.067	<0.002	<0.006	<0.02	<0.001	0.087	0.012	<0.005	**0.061**	<0.2	<0.01
	11/10/14	200.7/200.8	<0.005	0.082	<0.002	<0.006	<0.02	<0.001	0.18	<0.02	<0.005	**0.066**	<0.2	<0.01
	09/12/14	200.7/200.8	<0.01	0.086	<0.002	<0.006	<0.02	<0.001	0.18	0.017	<0.005	**0.065**	<0.2	<0.01
	06/03/14	200.7/200.8	<0.005	0.094	<0.002	<0.006	<0.02	<0.001	0.14	0.015	<0.005	**0.064**	<0.2	<0.01
	03/07/14	200.7/200.8	<0.005	0.071	<0.002	<0.006	<0.02	<0.001	0.086	0.012	<0.005	**0.06**	<0.2	<0.01
	11/11/13	200.7/200.8	0.0018	0.058	<0.002	<0.006	<0.02	<0.001	0.07	0.011	<0.005	**0.057**	<0.2	<0.01
	09/04/13	200.7/200.8	<0.005	0.084	<0.002	<0.006	<0.02	<0.001	0.12	0.011	<0.025	**0.061**	<0.2	<0.01
	06/13/13	200.7/200.8	<0.005	0.12	<0.002	<0.006	<0.02	NA	0.14	0.017	0.015	**0.076**	<0.2	<0.01
	03/19/13	200.7/200.8	<0.0025	0.11	<0.002	<0.006	<0.02	<0.005	0.16	0.0098	<0.005	**0.077**	<0.2	<0.01
	11/27/12	200.7/200.8	<0.0025	0.11	<0.002	<0.006	<0.006	<0.005	0.13	0.013	<0.005	**0.087**	<0.2	<0.01
	08/22/12	200.7/200.8	<0.0025	0.037	<0.002	<0.006	<0.006	<0.005	0.0034	0.0084	<0.005	**0.049**	<0.2	<0.01
	06/13/12	200.7/200.8	<0.0025	0.079	<0.002	<0.006	<0.006	<0.005	0.054	0.013	<0.005	**0.062**	<0.2	<0.01

8.12.2 OW-1, OW-10

Total Metals Analytical Result Summary

STANDARDS			PARAMETERS											
			Arsenic (mg/L)	Barium (mg/L)	Cadmium (mg/L)	Chromium (mg/L)	Iron (mg/L)	Lead (mg/L)	Manganese (mg/L)	Selenium (mg/L)	Silver (mg/L)	Uranium (mg/L)	Mercury (ug/L)	Zinc (mg/L)
WQCC 20 NMAC 6.2.3103 (DEC 2018)			**0.1**	**2**	**0.005**	**0.05**	**1**	**0.015**	**0.2**	**0.05**	**0.05**	**0.03**	**2**	**10**
40 CFR 141.62 MCL			0.01	2.0	0.005	0.1	NE	0.015	NE	0.05	NE	0.03	2	NE
NMED Tap Water (Rev 2. JUN 2019)			0.000855	3.28	0.00624	0.0057	13.8	NE	2.02	0.0987	0.0812	0.0592	0.626	5.96
EPA RSL for Tap Water (NOV 2019)			0.000052	3.8	0.0092	22	14	0.015	0.43	0.1	0.094	0.004	0.63	6
WELL ID	**DATE SAMPLED**	**METHOD**												
OW-10	03/22/12	200.7/200.8	<0.0025	0.033	<0.002	<0.006	<0.006	<0.005	<0.002	0.0076	<0.005	**0.051**	<0.2	<0.01
(continued)	12/15/11	200.7/200.8	<0.0025	0.037	<0.002	<0.006	<0.02	<0.005	0.022	0.0089	<0.005	**0.058**	<0.2	<0.01
	10/26/11	200.7/200.8	<0.0025	0.045	<0.002	<0.006	<0.02	<0.005	0.043	0.0071	<0.005	**0.051**	<0.2	<0.01
	06/20/11	200.7/200.8	<0.0025	0.038	<0.002	<0.006	<0.02	<0.005	0.0086	0.013	<0.005	**0.057**	<0.2	<0.01
	02/28/11	200.7/200.8	<0.0025	0.045	<0.002	<0.006	<0.02	<0.005	0.03	*<0.05**	<0.005	**0.054**	NA	<0.01
	11/10/10	6010B	<0.02	0.062	<0.002	<0.006	<0.02	<0.005	0.04	*<0.05**	<0.005	**0.052**	<0.2	<0.02
	09/21/10	6010B	<0.02	0.071	<0.002	<0.006	<0.02	<0.005	0.068	*<0.05**	<0.005	**0.057**	<0.2	<0.02
	03/15/10	6010B	<0.02	0.046	<0.002	<0.006	<0.02	<0.005	0.013	*<0.05**	<0.005	**0.0525**	<0.2	<0.02

DEFINITIONS

NA = Not analyzed; NE = Not established

Bold and highlighted values represent values above the applicable standards

STANDARDS

WQCC 20 NMAC 6.2.3103 - Standards for Ground Water of 10,000 mg/l TDS Concentration or Less.

a) Human Health Standards; b) Other Standards for Domestic Water

40 CFR 141.62 Maximum Contaminant Levels for Inorganic Contaminants

NMED Risk Assessment Guidance for Investigations and Remediations Table A-1

EPA Regional Screening Level (RSL) Summary Table

NOTES

Items notes with a * and italics have a detection limit greater than or equal to the applicable standard.

8.12.3 OW-1, OW-10

Dissolved Metals Analytical Result Summary

			PARAMETERS											
STANDARDS			Arsenic (mg/L)	Barium (mg/L)	Cadmium (mg/L)	Chromium (mg/L)	Copper (mg/L)	Iron (mg/L)	Lead (mg/L)	Manganese (mg/L)	Selenium (mg/L)	Silver (mg/L)	Uranium (mg/L)	Zinc (mg/L)
WQCC 20 NMAC 6.2.3103 (DEC 2018)			**0.01**	**2**	**0.005**	**0.05**	**1**	**1**	**0.015**	**0.2**	**0.05**	**0.05**	**0.03**	**10**
40 CFR 141.62 MCL			0.01	2.0	0.005	0.1	1.3	NE	0.015	NE	0.05	NE	0.03	NE
NMED Tap Water (Rev 2. JUN 2019)			0.000855	3.28	0.00624	0.0057	0.7898	13.8	NE	2.02	0.0987	0.0812	0.0592	5.96
EPA RSL for Tap Water (NOV 2019)			0.000052	3.8	0.0092	22	0.8	14	0.015	0.43	0.1	0.094	0.004	6
WELL ID	DATE SAMPLED	METHOD												
OW-1	10/16/19	200.7/200.8	0.0009	0.037	<0.002	<0.006	<0.006	<0.02	<0.0005	0.0007	0.0025	<0.005	**0.036**	0.026
	08/15/19	200.7/200.8	0.00083	0.032	<0.002	0.0048	0.0027	0.19	0.00046	0.018	0.0028	<0.005	**0.036**	0.0078
	05/21/19	200.7/200.8	0.00074	0.036	<0.002	<0.006	<0.006	<0.02	<0.0005	0.0015	0.0023	<0.005	**0.032**	0.046
	03/27/19	200.7/200.8	0.0007	0.038	<0.002	<0.006	<0.006	<0.02	<0.0005	0.0029	0.0023	<0.005	**0.036**	0.051
	11/08/18	200.7/200.8	0.00064	0.038	<0.002	<0.006	<0.006	<0.02	<0.0005	0.0048	0.0024	<0.005	**0.035**	0.0087
	09/11/18	200.7/200.8	0.0007	0.038	<0.002	<0.006	<0.006	0.017	<0.005	0.0068	0.0023	<0.005	**0.033**	0.0072
	05/15/18	200.7/200.8	0.00074	0.033	<0.002	<0.006	<0.006	<0.02	<0.0005	0.0045	0.0024	<0.005	**0.034**	0.0074
	02/27/18	200.7/200.8	<0.005	0.033	<0.002	0.0019	<0.006	0.022	<0.0005	0.003	<0.005	<0.005	**0.034**	0.0062
	12/08/17	200.7/200.8	0.0026	0.034	<0.002	<0.006	<0.006	<0.02	<0.0005	0.0031	0.004	<0.005	**0.037**	0.0076
	09/07/17	200.7/200.8	0.00099	0.037	<0.002	<0.006	<0.006	0.035	**0.035**	0.006	0.004	<0.005	**0.035**	0.026
	05/31/17	200.7/200.8	0.0018	0.056	<0.002	<0.006	<0.006	<0.02	0.00025	0.074	0.012	<0.005	NA	0.023
	02/27/17	200.7/200.8	0.0012	0.030	<0.002	0.0071	<0.006	0.16	0.00059	0.014	0.0037	<0.005	NA	0.015
	11/15/16	200.7/200.8	0.0012	0.034	<0.002	0.021	<0.006	<0.02	<0.0005	0.0029	0.0047	<0.005	**0.039**	<0.01
	09/06/16	200.7/200.8	0.0015	0.039	<0.002	0.0023	<0.006	0.31	0.0014	0.026	0.0041	<0.005	**0.04**	0.096
	06/06/16	200.7/200.8	0.0024	0.072	<0.002	0.0019	<0.006	0.82	0.0048	0.092	0.0046	<0.005	**0.041**	0.022
	03/03/16	200.7/200.8	0.0012	0.031	<0.002	<0.006	<0.006	0.026	0.00015	0.0074	0.0038	<0.005	**0.039**	0.062
	10/28/15	200.7/200.8	<0.005	0.083	<0.002	0.021	<0.006	**1.1**	0.0081	0.11	0.005	<0.005	**0.043**	0.02
	08/12/15	200.7/200.8	<0.005	0.1	<0.002	0.042	<0.006	**11**	0.0072	0.13	<0.005	<0.005	**0.042**	0.028
	06/03/15	200.7/200.8	*<0.01**	0.033	<0.002	<0.006	<0.006	<0.02	<0.01	0.006	<0.01	<0.005	**0.041**	0.034
	03/09/15	200.7/200.8	<0.001	0.034	<0.002	<0.006	<0.006	<0.02	<0.001	0.0055	0.0047	<0.005	**0.039**	<0.01
	11/10/14	200.7/200.8	0.0013	0.033	<0.002	<0.006	<0.006	0.048	*<0.02**	<0.002	0.0037	<0.005	**0.038**	0.031
	09/11/14	200.7/200.8	0.0025	0.12	<0.002	0.0082	<0.006	**7.1**	**0.017**	**0.23**	0.0044	<0.005	**0.048**	0.078
	06/03/14	200.7/200.8	0.0016	0.039	<0.002	<0.006	<0.006	0.64	<0.005	0.025	0.0066	<0.005	**0.044**	0.013
	03/07/14	200.7/200.8	<0.001	0.035	<0.002	<0.006	<0.006	<0.02	<0.001	0.0063	0.0039	<0.005	**0.043**	0.012
	11/11/13	200.7/200.8	0.0012	0.038	<0.002	<0.006	<0.006	<0.02	<0.001	0.0075	0.0046	<0.005	**0.041**	0.029
	09/04/13	200.7/200.8	<0.005	0.033	<0.002	<0.006	<0.006	0.037	<0.005	0.0062	<0.005	<0.005	**0.045**	<0.01
	06/13/13	200.7/200.8	0.0014	0.035	<0.002	<0.006	<0.006	0.35	<0.001	0.013	0.0049	<0.005	**0.043**	0.25
	03/19/13	200.7/200.8	0.0013	0.03	<0.002	<0.006	<0.006	<0.02	<0.005	<0.002	0.0036	<0.005	**0.044**	0.037
	11/27/12	200.7/200.8	0.0012	0.033	*<0.01**	<0.03	<0.03	<0.1	*<0.025**	<0.01	0.004	<0.025	**0.043**	<0.05
	08/22/12	200.7/200.8	<0.001	0.029	<0.002	<0.006	<0.006	<0.02	<0.005	0.0086	0.0036	<0.005	**0.041**	0.011
	06/13/12	200.7/200.8	<0.001	0.036	<0.002	<0.006	<0.006	<0.02	<0.005	0.0067	0.0037	<0.005	**0.043**	0.015
	03/22/12	200.7/200.8	<0.001	0.034	<0.002	<0.006	<0.006	<0.02	<0.005	0.005	0.0037	<0.005	**0.039**	0.027

8.12.3 OW-1, OW-10
Dissolved Metals Analytical Result Summary

			PARAMETERS											
STANDARDS			Arsenic (mg/L)	Barium (mg/L)	Cadmium (mg/L)	Chromium (mg/L)	Copper (mg/L)	Iron (mg/L)	Lead (mg/L)	Manganese (mg/L)	Selenium (mg/L)	Silver (mg/L)	Uranium (mg/L)	Zinc (mg/L)
WQCC 20 NMAC 6.2.3103 (DEC 2018)			**0.01**	**2**	**0.005**	**0.05**	**1**	**1**	**0.015**	**0.2**	**0.05**	**0.05**	**0.03**	**10**
40 CFR 141.62 MCL			0.01	2.0	0.005	0.1	1.3	NE	0.015	NE	0.05	NE	0.03	NE
NMED Tap Water (Rev 2. JUN 2019)			0.000855	3.28	0.00624	0.0057	0.7898	13.8	NE	2.02	0.0987	0.0812	0.0592	5.96
EPA RSL for Tap Water (NOV 2019)			0.000052	3.8	0.0092	22	0.8	14	0.015	0.43	0.1	0.094	0.004	6
WELL ID	DATE SAMPLED	METHOD												
OW-1	12/15/11	200.7/200.8	<0.001	0.018	<0.002	<0.006	<0.006	0.19	<0.005	0.013	0.0031	<0.005	**0.043**	0.018
(continued)	10/27/11	200.7/200.8	<0.001	0.035	<0.002	<0.006	<0.006	<0.02	<0.005	0.0059	0.0036	<0.005	**0.04**	<0.01
	06/20/11	200.7/200.8	0.0014	0.034	<0.002	<0.006	<0.006	<0.02	<0.005	0.0045	0.0062	<0.005	**0.043**	0.048
	03/01/11	200.7/200.8	<0.001	0.037	<0.002	<0.006	<0.006	<0.02	<0.005	0.0041	*<0.05**	<0.005	**0.032**	<0.01
	11/10/10	6010B	*<0.02**	0.037	<0.002	<0.006	<0.006	<0.02	<0.005	0.0046	*<0.05**	<0.005	**0.04**	<0.05
	09/21/10	6010B	*<0.02**	0.029	<0.002	<0.006	<0.006	<0.02	<0.005	0.0041	*<0.05**	<0.005	**0.038**	<0.05
	03/15/10	6010B	*<0.02**	0.028	<0.002	<0.006	<0.006	<0.02	<0.005	<0.002	*<0.05**	<0.005	**0.0379**	<0.05
OW-10	10/17/19	200.7/200.8	0.00098	0.066	<0.002	<0.006	<0.006	<0.02	<0.0025	0.16	0.009	0.0032	**0.057**	0.0076
	08/15/19	200.7/200.8	0.0006	0.056	<0.002	<0.006	0.0033	<0.02	0.00012	0.093	0.0079	0.002	**0.048**	0.0063
	05/28/19	200.7/200.8	0.00047	0.049	<0.002	<0.006	<0.006	<0.02	0.00015	0.039	0.0075	0.0015	**0.046**	0.019
	03/27/19	200.7/200.8	0.00053	0.049	<0.002	<0.006	<0.006	<0.02	0.00012	0.042	0.0083	0.0023	**0.047**	0.024
	11/08/18	200.7/200.8	0.00083	0.053	<0.002	<0.006	<0.006	<0.02	<0.0005	0.061	0.01	0.0023	**0.053**	0.015
	09/11/18	200.7/200.8	0.001	0.06	<0.002	<0.006	<0.006	<0.02	0.00018	0.089	0.011	0.0041	**0.05**	0.014
	05/15/18	200.7/200.8	<0.005	0.053	<0.002	<0.006	<0.006	<0.02	<0.0025	0.075	0.012	<0.005	**0.055**	0.0058
	02/27/18	200.7/200.8	0.0026	0.057	<0.002	<0.006	<0.006	0.043	0.0002	0.12	0.01	0.0032	**0.054**	0.0067
	12/07/17	200.7/200.8	0.0046	0.053	<0.002	<0.006	<0.006	<0.02	0.0003	0.069	0.014	0.0022	**0.051**	0.012
	09/07/17	200.7/200.8	0.0028	0.06	<0.002	<0.006	<0.006	<0.02	0.00024	0.066	0.018	<0.005	**0.055**	0.069
	05/31/17	200.7/200.8	0.0018	0.056	<0.002	<0.006	<0.006	<0.02	0.00025	0.074	0.012	<0.005	NA	0.023
	02/27/17	200.7/200.8	0.0019	0.045	<0.002	<0.006	<0.006	<0.02	0.00018	0.042	0.013	<0.005	NA	0.030
	11/15/16	200.7/200.8	0.0024	0.051	<0.002	<0.006	<0.006	<0.02	0.00017	0.076	0.016	<0.005	**0.056**	0.014
	09/06/16	200.7/200.8	0.0027	0.064	<0.002	<0.006	<0.006	<0.02	0.0002	0.12	0.015	<0.005	**0.056**	0.062
	06/06/16	200.7/200.8	0.0036	0.065	<0.002	<0.006	<0.006	<0.02	0.00022	0.11	0.016	<0.005	**0.058**	0.13
	03/03/16	200.7/200.8	0.0018	0.067	<0.002	<0.006	<0.006	<0.02	0.0002	0.12	0.013	<0.005	**0.057**	0.014
	10/28/15	200.7/200.8	<0.005	0.099	<0.002	<0.006	<0.006	<0.02	<0.0025	**0.22**	0.019	<0.005	**0.061**	<0.01
	08/12/15	200.7/200.8	<0.005	0.066	<0.002	<0.006	<0.006	<0.02	<0.0025	0.1	0.013	<0.005	**0.056**	<0.01
	06/03/15	200.7/200.8	*<0.01**	0.074	<0.002	<0.006	<0.006	<0.02	<0.01	0.075	0.014	<0.005	**0.059**	0.01
	03/09/15	200.7/200.8	<0.005	0.076	<0.002	<0.006	<0.006	<0.02	<0.001	0.11	*<0.05**	<0.005	**0.057**	<0.01
	11/10/14	200.7/200.8	*<0.01**	0.039	<0.002	<0.006	<0.006	<0.02	<0.01	0.0099	0.013	<0.005	**0.057**	0.038
	09/12/14	200.7/200.8	<0.005	0.099	<0.002	<0.006	<0.006	<0.02	<0.01	0.2	0.017	<0.005	**0.064**	<0.01
	06/03/14	200.7/200.8	<0.005	0.094	<0.002	<0.006	<0.006	<0.02	<0.005	0.13	0.017	<0.005	**0.062**	<0.01
	03/07/14	200.7/200.8	<0.005	0.071	<0.002	<0.006	<0.006	<0.02	<0.001	0.098	0.0095	<0.005	**0.057**	<0.01
	11/11/13	200.7/200.8	0.0021	0.063	<0.002	<0.006	<0.006	<0.02	<0.001	0.066	0.013	<0.005	**0.054**	<0.01
	09/04/13	200.7/200.8	<0.005	0.082	<0.002	<0.006	<0.006	<0.02	<0.005	0.12	0.011	<0.025	**0.066**	<0.01
	06/13/13	200.7/200.8	0.0025	0.12	<0.002	<0.006	<0.006	<0.02	<0.001	0.14	0.019	0.012	**0.076**	0.018
	03/19/13	200.7/200.8	<0.005	0.1	<0.002	<0.006	<0.006	<0.02	<0.005	0.15	0.015	<0.005	**0.073**	<0.01
	11/27/12	200.7/200.8	0.0017	0.11	*<0.01**	<0.03	<0.03	<0.1	*<0.025**	0.13	0.015	<0.025	**0.078**	0.05

8.12.3 OW-1, OW-10

Dissolved Metals Analytical Result Summary

			PARAMETERS											
STANDARDS			Arsenic (mg/L)	Barium (mg/L)	Cadmium (mg/L)	Chromium (mg/L)	Copper (mg/L)	Iron (mg/L)	Lead (mg/L)	Manganese (mg/L)	Selenium (mg/L)	Silver (mg/L)	Uranium (mg/L)	Zinc (mg/L)
WQCC 20 NMAC 6.2.3103 (DEC 2018)			**0.01**	**2**	**0.005**	**0.05**	**1**	**1**	**0.015**	**0.2**	**0.05**	**0.05**	**0.03**	**10**
40 CFR 141.62 MCL			0.01	2.0	0.005	0.1	1.3	NE	0.015	NE	0.05	NE	0.03	NE
NMED Tap Water (Rev 2. JUN 2019)			0.000855	3.28	0.00624	0.0057	0.7898	13.8	NE	2.02	0.0987	0.0812	0.0592	5.96
EPA RSL for Tap Water (NOV 2019)			0.000052	3.8	0.0092	22	0.8	14	0.015	0.43	0.1	0.094	0.004	6
WELL ID	**DATE SAMPLED**	**METHOD**												
OW-10	08/22/12	200.7/200.8	0.001	0.034	<0.002	<0.006	<0.006	<0.02	<0.005	<0.002	0.0076	<0.005	**0.05**	<0.01
(continued)	06/13/12	200.7/200.8	<0.002	0.08	<0.002	<0.006	<0.006	<0.02	<0.005	0.053	0.014	<0.005	**0.067**	0.026
	03/22/12	200.7/200.8	<0.001	0.033	<0.002	<0.006	<0.006	<0.02	<0.005	0.0023	0.0076	<0.005	**0.048**	0.024
	12/15/11	200.7/200.8	<0.001	0.038	<0.002	<0.006	<0.006	<0.02	<0.005	0.023	0.0089	<0.005	**0.056**	<0.01
	10/26/11	200.7/200.8	0.001	0.043	<0.002	<0.006	<0.006	<0.02	<0.005	0.04	0.0079	<0.005	**0.05**	<0.01
	06/20/11	200.7/200.8	0.002	0.034	<0.002	<0.006	<0.006	<0.02	<0.005	0.0055	0.015	<0.005	**0.052**	0.16
	02/28/11	200.7/200.8	<0.001	0.044	<0.002	<0.006	<0.006	<0.02	<0.005	0.029	*<0.05**	<0.005	**0.055**	<0.01
	11/10/10	6010B	*<0.02**	0.047	<0.002	<0.006	<0.006	<0.02	<0.005	0.03	*<0.05**	<0.005	**0.052**	<0.05
	09/21/10	6010B	*<0.02**	0.064	<0.002	<0.006	<0.006	<0.02	<0.005	0.055	*<0.05**	<0.005	**0.051**	0.088
	03/15/10	6010B	*<0.02**	0.044	<0.002	<0.006	<0.006	<0.02	<0.005	0.012	*<0.05**	<0.005	**0.0497**	<0.05

DEFINITIONS

NA = Not analyzed; NE = Not established

Bold and highlighted values represent values above the applicable standards

STANDARDS

WQCC 20 NMAC 6.2.3103 - Standards for Ground Water of 10,000 mg/l TDS Concentration or Less.

a) Human Health Standards; b) Other Standards for Domestic Water

40 CFR 141.62 Maximum Contaminant Levels for Inorganic Contaminants

NMED Risk Assessment Guidance for Investigations and Remediations Table A-1

EPA Regional Screening Level (RSL) Summary Table

NOTES

Items notes with a * and italics have a detection limit greater than or equal to the applicable standard.

8.12.4 OW-1, OW-10

Volatile Organic Compound Analytical Result Summary

			PARAMETERS							
		STANDARDS	Benzoic acid (mg/L)	1,2,4-Trimethyl benzene (mg/L)	1,2-Dichloro ethane (EDC) (mg/L)	1,2-Dibromo ethane (EDB) [1] (mg/L)	Acetone (mg/L)	cis-1,2-DCE (mg/L)	1,1-Dichloroethane (mg/L)	1,1-Dichloroethene (mg/L)
		WQCC 20NMAC 6.2.3103	NE	NE	**0.005**	**0.00005**	NE	**0.07**	**0.025**	**0.007**
		40 CFR 141.62 MCL	NE	NE	0.005	0.00005	NE	0.07	NE	0.007
		NMED Tap Water (Rev 2. JUN 2019)	NE	NE	0.0017	0.0000747	**14.06**	0.0365	0.0275	0.284
		EPA RSL for Tap Water (NOV 2019)	**75**	**0.056**	0.0017	0.000075	NE	0.036	0.028	0.28
Well ID	**DATE SAMPLED**	**METHOD**								
OW-1	10/16/19	8260B/8011/504.1EDB		<0.001	<0.001	<0.0000094	<0.01	<0.001	<0.001	<0.001
	08/15/19	8260B/8011/504.1EDB		<0.001	<0.001	<0.0000093	<0.01	<0.001	<0.001	<0.001
	05/21/19	8260B/8011/504.1EDB		<0.001	<0.001	<0.0000094	<0.01	<0.001	<0.001	<0.001
	03/27/19	8260B/8011/504.1EDB		<0.001	0.00035	<0.0000094	0.0039	<0.001	0.00052	0.00037
	11/08/18	8260B/8011/504.1EDB		<0.001	<0.001	<0.0000095	<0.01	<0.001	<0.001	<0.001
	09/11/18	8260B/8011/504.1EDB		<0.001	<0.001	<0.0000095	0.0086	<0.001	<0.001	<0.001
	05/15/18	8260B/8011/504.1EDB		<0.001	<0.001	<0.0000094		<0.001	<0.001	<0.001
	02/27/18	8260B/8011/504.1EDB		<0.001	<0.001	<0.0000094		<0.001	<0.001	<0.001
	12/08/17	8260B/8011/504.1EDB		<0.001	<0.001	*<0.001**		<0.001	<0.001	<0.001
	09/07/17	8260B/8011/504.1EDB		<0.001	<0.001	*<0.001**		<0.001	<0.001	<0.001
	05/31/17	8260B/8011/504.1EDB		<0.001	0.00045	*<0.001**		<0.001	<0.001	<0.001
	02/27/17	8260B/8011/504.1EDB		<0.001	<0.001	*<0.001**		<0.001	<0.001	<0.001

8.12.4 OW-1, OW-10

Volatile Organic Compound Analytical Result Summary

			PARAMETERS							
		STANDARDS	Benzoic acid (mg/L)	1,2,4-Trimethyl benzene (mg/L)	1,2-Dichloro ethane (EDC) (mg/L)	1,2-Dibromo ethane (EDB) [1] (mg/L)	Acetone (mg/L)	cis-1,2-DCE (mg/L)	1,1-Dichloroethane (mg/L)	1,1-Dichloroethene (mg/L)
		WQCC 20NMAC 6.2.3103	NE	NE	**0.005**	**0.00005**	NE	**0.07**	**0.025**	**0.007**
		40 CFR 141.62 MCL	NE	NE	0.005	0.00005	NE	0.07	NE	0.007
		NMED Tap Water (Rev 2. JUN 2019)	NE	NE	0.0017	0.0000747	**14.06**	0.0365	0.0275	0.284
		EPA RSL for Tap Water (NOV 2019)	**75**	**0.056**	0.0017	0.000075	NE	0.036	0.028	0.28
Well ID	**DATE SAMPLED**	**METHOD**								
OW-10	10/17/19	8260B/8011/504.1EDB	NA	<0.001	0.00054	<0.0000094	0.0058	<0.001	0.00083	0.00059
	08/15/19	8260B/8011/504.1EDB	NA	<0.001	0.00036	<0.0000094	0.0014	<0.001	0.00079	0.00056
	05/28/19	8270/8260B/8011/504.1EDB	0.012	<0.001	<0.001	<0.0000094	<0.01	<0.001	0.00055	0.00038
	03/27/19	8260B/8011/504.1EDB		<0.001	<0.001	<0.0000095	0.0038	<0.001	<0.001	<0.001
	11/08/18	8260B/8011/504.1EDB		<0.001	0.00063	<0.0000095	<0.01	0.00032	0.0012	0.00098
	09/11/18	8260B/8011/504.1EDB		<0.001	0.00045	<0.0000094	0.0068	<0.001	0.0013	0.00086
	05/15/18	8260B/8011/504.1EDB		<0.001	0.00066	<0.0000094	0.0015	0.00035	0.0013	0.00094
	02/27/18	8260B/8011/504.1EDB		<0.001	0.0006	<0.0000094		0.00034	0.0012	0.0009
	12/07/17	8260B/8011/504.1EDB		<0.001	0.00055	*<0.001**		0.00032	0.001	0.00086
	09/07/17	8260B/8011/504.1EDB		<0.001	0.00045	*<0.001**		<0.001	0.0012	0.0009
	05/31/17	8260B/8011/504.1EDB		<0.001	0.00045	*<0.001**		0.00025	0.0011	0.0009
	02/27/17	8260B/8011/504.1EDB		<0.001	0.0005	*<0.001**		0.00029	0.00087	0.00063
	11/15/16	8260B/8011/504.1EDB		<0.001	0.00052	<0.00001		0.00028	0.00085	0.00067
	09/06/16	8260B/8011/504.1EDB		<0.0.01	0.00073	*<0.01**		0.00029	0.00093	0.00076
	06/06/16	8260B		<0.001	0.00051	*<0.001**		0.00031	0.0011	0.0009
	03/03/16	8260B		<0.001	0.00055	*<0.001**		0.00026	0.00096	0.00091
	10/28/15	8260B		0.0016	<0.001				<0.001	<0.001
	08/12/15	8260B			<0.001				0.0011	<0.001
	06/03/15	8260B			<0.001				<0.001	<0.001
	03/09/15	8260B			<0.001				<0.001	<0.001
	11/10/14	8260B			<0.001				0.0013	0.0017
	09/12/14	8260B			0.0011				0.0016	0.0018
	06/03/14	8260B			<0.001				0.0012	0.0012
	03/07/14	8260B			<0.001				<0.001	<0.001
	11/11/13	8260B			<0.001				<0.001	<0.001
	09/04/13	8260B			<0.001				<0.001	<0.001
	06/13/13	8260B			0.001				0.0016	0.0019
	03/19/13	8260B			0.0013				0.0015	0.0019
	11/27/12	8260B			0.0011				0.0016	0.0021

DEFINITIONS

NA = Not analyzed; NE = Not established

Bold and highlighted values represent values above the applicable standards

STANDARDS

WQCC 20 NMAC 6.2.3103 - Standards for Ground Water of 10,000 mg/l TDS Concentration or Less.

a) Human Health Standards; b) Other Standards for Domestic Water

40 CFR 141.62 Detection Limits for Inorganic Contaminants

EPA Regional Screening Level (RSL) Summary Table

NMED Risk Assessment Guidance for Investigations and Remediations Table A-1

NOTES

Items notes with a * and italics have a detection limit greater than or equal to the applicable standard.

1) New requirement per NMED directive "Approval with Modifications" dated May 18, 2016.

8.13 OW-13, OW-14, OW-29, OW-30
BTEX and MTBE Analytical Result Summary

			PARAMETERS				
STANDARDS			Benzene (mg/L)	Toluene (mg/L)	Ethylbenzene (mg/L)	Total Xylenes (mg/L)	MTBE (mg/L)
WQCC 20 NMAC 6.2.3103 (DEC 2018)			0.005	1	0.7	0.62	0.1
40 CFR 141.61 MCL			0.005	1.0	0.7	10	NE
NMED TAP WATER (JUNE 2019)			0.00455	1.09	0.0149	0.193	0.143
EPA RSL TAP WATER (NOVEMBER 2019)			0.0046	1.1	0.0015	0.19	0.14
WELL ID	DATE SAMPLED	METHOD					
OW-13	10/14/19	8260B	<0.001	<0.001	<0.001	<0.0015	0.077
	08/12/19	8260B	<0.001	<0.001	<0.001	<0.0015	0.094
	05/01/19	8260B	0.00036	<0.001	<0.001	<0.0015	0.082
	02/05/19	8260B	<0.001	<0.001	<0.001	<0.0015	0.084
	11/06/18	8260B	<0.001	<0.001	<0.001	<0.0015	0.062
	09/11/18	8260B	<0.001	<0.001	<0.001	<0.0015	0.075
	05/15/18	8260B	<0.001	<0.001	<0.001	<0.0015	0.068
	02/28/18	8260B	<0.001	<0.001	<0.001	<0.0015	0.058
	12/11/17	8260B	<0.001	<0.001	<0.001	<0.0015	0.056
	09/06/17	8260B	<0.001	<0.001	<0.001	<0.0015	0.056
	05/31/17	8260B	<0.001	<0.001	<0.001	<0.0015	0.058
	02/27/17	8260B	<0.001	<0.001	<0.001	<0.0015	0.053
	11/15/16	8260B	<0.001	<0.001	<0.001	<0.0015	0.044
	08/31/16	8260B	0.00013	<0.001	<0.001	<0.0015	0.038
	06/06/16	8260B	<0.001	<0.001	<0.001	<0.0015	0.036
	03/04/16	8260B	<0.001	<0.001	<0.001	<0.0015	0.035
	10/27/15	8260B	<0.001	0.0013	<0.001	0.0016	0.035
	08/11/15	8260B	<0.001	<0.001	<0.001	<0.0015	0.031
	06/01/15	8260B	<0.001	<0.001	<0.001	<0.0015	0.025
	03/09/15	8260B	<0.001	<0.001	<0.001	<0.0015	0.026
	11/10/14	8260B	<0.001	<0.001	<0.001	<0.0015	0.027
	09/15/14	8260B	<0.001	<0.001	<0.001	<0.0015	0.023
	06/03/14	8260B	<0.001	<0.001	<0.001	<0.0015	0.02
	03/07/14	8260B	<0.001	<0.001	<0.001	<0.0015	0.023
	11/11/13	8260B	<0.001	<0.001	<0.001	<0.0015	0.017
	09/04/13	8260B	<0.001	<0.001	<0.001	<0.0015	0.014
	06/13/13	8260B	<0.001	<0.001	<0.001	<0.0015	0.015
	03/19/13	8260B	<0.001	<0.001	<0.001	<0.0015	0.012
	11/27/12	8260B	<0.001	<0.001	<0.001	<0.0015	0.011
	08/23/12	8260B	<0.001	<0.001	<0.001	<0.0015	0.0092
	06/14/12	8260B	<0.001	<0.001	<0.001	<0.0015	0.0079
	03/21/12	8260B	<0.001	<0.001	<0.001	<0.0015	0.0082
	12/13/11	8260B	<0.001	<0.001	<0.001	<0.0015	0.0065
	10/25/11	8260B	<0.001	<0.001	<0.001	<0.0015	0.0062
	06/20/11	8260B	<0.001	<0.001	<0.001	<0.0015	0.0048
	02/24/11	8260B	<0.001	<0.001	<0.001	<0.0015	0.004
	11/08/10	8260B	<0.001	<0.001	<0.001	<0.0015	0.0038
	09/22/10	8260B	<0.001	<0.001	<0.001	<0.0015	0.0031
	06/07/10	8021B	<0.001	<0.001	<0.001	<0.0015	0.0027
	03/25/10	8021B	<0.001	<0.001	<0.001	<0.0015	0.0023

8.13 OW-13, OW-14, OW-29, OW-30
BTEX and MTBE Analytical Result Summary

STANDARDS			PARAMETERS				
			Benzene (mg/L)	Toluene (mg/L)	Ethylbenzene (mg/L)	Total Xylenes (mg/L)	MTBE (mg/L)
WQCC 20 NMAC 6.2.3103 (DEC 2018)			**0.005**	**1**	**0.7**	**0.62**	**0.1**
40 CFR 141.61 MCL			0.005	1.0	0.7	10	NE
NMED TAP WATER (JUNE 2019)			0.00455	1.09	0.0149	0.193	0.143
EPA RSL TAP WATER (NOVEMBER 2019)			0.0046	1.1	0.0015	0.19	0.14
WELL ID	**DATE SAMPLED**	**METHOD**					
OW-14 [1]	08/12/19	--	Recovery system installed				
	05/01/19	8260B	**16**	<0.05	**0.71**	<0.075	**0.73**
	02/05/19	8260B	**16**	0.012	0.68	0.056	**0.73**
	11/09/18	8260B	**13**	<0.05	0.64	<0.05	**0.6**
	09/11/18	8260B	**17**	<0.05	0.66	0.042	**0.74**
	05/15/18	8260B	**15**	0.0088	**0.71**	<0.15	**0.67**
	02/27/18	8260B	**14**	0.0065	0.61	<0.15	**0.66**
	12/11/17	8260B	**13**	0.013	0.64	0.052	**0.63**
	09/06/17	8260B	**12**	0.0091	0.54	0.033	**0.66**
	05/30/17	8260B	**13**	0.004	0.47	0.02	**0.7**
	02/27/17	8260B	**12**	0.0062	0.39	<0.075	**0.81**
	11/15/16	8260B	**8.7**	0.0057	0.3	0.013	**0.5**
	08/31/16	8260B	**8.1**	0.0029	0.25	0.008	**0.58**
	06/06/16	8260B	**7.8**	0.0026	0.23	0.012	**0.62**
	03/04/16	8260B	**6.5**	<0.05	0.23	<0.075	**0.68**
	10/27/15	8260B	**6.2**	<0.02	0.15	<0.03	**0.57**
	08/10/15	8260B	**5.4**	<0.01	0.16	<0.015	**0.78**
	06/01/15	8260B	**4.6**	<0.02	0.16	<0.03	**0.74**
	03/09/15	8260B	**3.9**	<0.02	0.16	<0.03	**0.76**
	11/10/14	8260B	**3.6**	0.015	0.17	<0.015	**0.81**
	09/15/14	8260B	**3.8**	<0.02	0.16	<0.03	**0.82**
	06/03/14	8260B	**3.7**	<0.02	0.12	<0.03	**0.93**
	03/07/14	8260B	**4**	0.026	0.14	0.032	**1.1**
	11/11/13	8260B	**3.3**	0.046	0.13	0.019	**1.1**
	09/04/13	8260B	**2.6**	<0.005	0.063	<0.0075	**0.94**
	06/13/13	8260B	**3.4**	<0.01	0.073	<0.015	**1.3**
	03/19/13	8260B	**2.8**	<0.01	0.065	<0.015	**1.3**
	11/27/12	8260B	**2.7**	<0.01	0.056	<0.015	**1.4**
	08/23/12	8260B	**2.1**	<0.01	0.037	<0.015	**1.6**
	06/14/12	8260B	**2.6**	<0.01	0.053	<0.015	**1.2**
	03/21/12	8260B	**2.3**	<0.01	0.051	<0.015	**1.4**
	12/13/11	8260B	**1.5**	<0.005	0.036	<0.0075	**1.3**
	10/24/11	8260B	**1.4**	<0.005	0.045	<0.0075	**1.4**
	06/20/11	8260B	**1.8**	0.0015	0.061	<0.0015	**1.6**
	02/24/11	8260B	**1.3**	0.0019	0.042	<0.0015	**1.4**
	11/08/10	8260B	**0.63**	<0.001	0.018	<0.0015	**1.3**
	09/22/10	8260B	**0.47**	<0.001	0.0083	<0.0015	**1.4**
	06/07/10	8260B	**0.33**	0.0018	0.0085	<0.0015	**1.4**
	03/24/10	8260B	**0.25**	<0.005	0.01	<0.0075	**1.5**

8.13 OW-13, OW-14, OW-29, OW-30
BTEX and MTBE Analytical Result Summary

STANDARDS			PARAMETERS				
			Benzene (mg/L)	Toluene (mg/L)	Ethylbenzene (mg/L)	Total Xylenes (mg/L)	MTBE (mg/L)
WQCC 20 NMAC 6.2.3103 (DEC 2018)			**0.005**	**1**	**0.7**	**0.62**	**0.1**
40 CFR 141.61 MCL			0.005	1.0	0.7	10	NE
NMED TAP WATER (JUNE 2019)			0.00455	1.09	0.0149	0.193	0.143
EPA RSL TAP WATER (NOVEMBER 2019)			0.0046	1.1	0.0015	0.19	0.14
WELL ID	**DATE SAMPLED**	**METHOD**					
OW-29	10/14/19	8260B	*<0.005**	<0.005	<0.005	<0.0075	**3.1**
	08/12/19	8260B	*<0.005**	<0.005	<0.005	<0.0075	**3.8**
	05/01/19	8260B	*<0.005**	<0.005	<0.005	<0.0075	**3.7**
	02/05/19	8260B	0.0011	<0.005	<0.005	<0.0075	**4**
	11/06/18	8260B	*<0.005**	<0.005	<0.005	<0.0075	**3.2**
	09/11/18	8260B	0.00096	<0.005	<0.005	<0.0075	**3.9**
	05/16/18	8260B	<0.002	<0.002	<0.002	<0.003	**3.8**
	02/27/18	8260B	*<0.005**	<0.005	<0.005	<0.0075	**3.7**
	12/11/17	8260B	*<0.005**	<0.005	<0.005	<0.0075	**3.8**
	09/06/17	8260B	<0.001	<0.001	<0.001	<0.0015	**3.8**
	05/30/17	8260B	*<0.01**	<0.01	<0.01	<0.015	**4**
	02/27/17	8260B	*<0.01**	<0.01	<0.01	<0.015	**4.3**
	11/15/16	8260B	**0.0079**	<0.005	0.0011	<0.0075	**3.4**
	08/31/16	8260B	0.00054	<0.001	<0.001	<0.0015	**3**
	06/06/16	8260B	*<0.005**	<0.005	<0.005	<0.0075	**3.1**
	03/04/16	8260B	*<0.005**	<0.005	<0.005	<0.0075	**3.2**
	10/27/15	8260B	*<0.005**	<0.005	<0.005	<0.0075	**3.1**
	08/11/15	8260B	*<0.005**	<0.005	<0.005	<0.0075	**3.1**
	06/01/15	8260B	*<0.005**	<0.005	<0.005	<0.0075	**2.6**
	03/09/15	8260B	<0.001	<0.001	<0.001	<0.015	**3.2**
	11/11/14	8260B	*<0.005**	<0.005	<0.005	<0.015	**3**
	09/15/14	8260B	*<0.005**	<0.005	<0.005	<0.0075	**2.5**
	06/03/14	8260B	<0.001	<0.001	<0.001	<0.0015	**2**
	03/07/14	8260B	<0.001	<0.001	<0.001	<0.0015	**2.1**
	11/11/13	8260B	<0.002	<0.002	<0.002	<0.003	**1.7**
	09/04/13	8260B	<0.001	<0.001	<0.001	<0.0015	**1.3**
	06/13/13	8260B	<0.001	<0.001	<0.001	<0.0015	**1.4**
	03/19/13	8260B	<0.001	<0.001	<0.001	<0.0015	**1.1**
	11/27/12	8260B	<0.001	<0.001	<0.001	<0.0015	**0.9**
	08/23/12	8260B	<0.001	<0.001	<0.001	<0.0015	**1**
	06/14/12	8260B	<0.001	<0.001	<0.001	<0.0015	**0.47**
	03/21/12	8260B	<0.001	<0.001	<0.001	<0.0015	**0.62**
	12/13/11	8260B	<0.001	<0.001	<0.001	<0.0015	**0.49**
	10/24/11	8260B	<0.001	<0.001	<0.001	<0.0015	**0.47**
	06/20/11	8260B	<0.001	<0.001	<0.001	<0.0015	**0.47**
	02/24/11	8260B	<0.001	<0.001	<0.001	<0.0015	**0.3**
	11/09/10	8260B	<0.001	<0.001	<0.001	<0.0015	**0.22**
	09/22/10	8260B	<0.001	<0.001	<0.001	<0.0015	**0.19**
	06/07/10	8260B	<0.001	<0.001	<0.001	<0.0015	**0.15**
	03/25/10	8260B	<0.001	<0.001	<0.001	<0.0015	**0.12**

8.13 OW-13, OW-14, OW-29, OW-30
BTEX and MTBE Analytical Result Summary

STANDARDS			PARAMETERS				
			Benzene (mg/L)	Toluene (mg/L)	Ethylbenzene (mg/L)	Total Xylenes (mg/L)	MTBE (mg/L)
WQCC 20 NMAC 6.2.3103 (DEC 2018)			**0.005**	**1**	**0.7**	**0.62**	**0.1**
40 CFR 141.61 MCL			0.005	1.0	0.7	10	NE
NMED TAP WATER (JUNE 2019)			0.00455	1.09	0.0149	0.193	0.143
EPA RSL TAP WATER (NOVEMBER 2019)			0.0046	1.1	0.0015	0.19	0.14
WELL ID	**DATE SAMPLED**	**METHOD**					
OW-30 [1]	08/12/19	--	Recovery system installed				
	06/05/19	8260B	*<0.005**	<0.005	<0.005	<0.0075	**2.3**
	03/27/19	8260B	*<0.005**	<0.005	<0.005	<0.0075	**2.3**
	12/03/18	8260B	*<0.005**	<0.005	<0.005	<0.0075	**2.7**
	09/19/18	8260B	*<0.005**	<0.005	<0.005	<0.0075	**2.9**
	05/16/18	8260B	<0.001	<0.001	<0.001	<0.0015	**3.2**
	02/28/18	8260B	**0.0063**	<0.005	<0.005	<0.0075	**2.9**
	12/12/17	8260B	**0.012**	<0.005	<0.005	<0.0075	**3.1**
	09/06/17	8260B	<0.001	<0.001	<0.001	<0.0015	**3.2**
	05/31/17	8260B	*<0.01**	<0.01	<0.01	<0.015	**3.3**
	02/27/17	8260B	0.00097	<0.01	<0.01	<0.015	**4**
	11/14/16	8260B	*<0.005**	<0.005	<0.005	<0.0075	**3.5**
	08/31/16	8260B	<0.001	<0.001	<0.001	<0.0015	**3**
	06/06/16	8260B	0.0012	<0.005	<0.005	<0.0075	**3.1**
	03/08/16	8260B	0.0031	<0.002	<0.002	<0.003	**3.5**
	10/27/15	8260B	*<0.005**	<0.005	<0.005	<0.0075	**3.5**
	08/10/15	8260B	<0.001	<0.001	<0.001	<0.0015	**3.8**
	06/02/15	8260B	*<0.005**	<0.005	<0.005	<0.0075	**3.1**
	03/09/15	8260B	<0.001	<0.001	<0.001	<0.0015	**4**
	11/11/14	8260B	*<0.005**	<0.005	<0.005	<0.0015	**3.6**
	09/17/14	8260B	<0.001	<0.001	<0.001	<0.0015	**2.8**
	06/03/14	8260B	<0.001	<0.001	<0.001	<0.0015	**2.7**
	03/07/14	8260B	<0.001	<0.001	<0.001	<0.0015	**2.9**
	11/11/13	8260B	<0.001	<0.001	<0.001	<0.0015	**2.6**
	09/04/13	8260B	<0.001	<0.001	<0.001	<0.0015	**2.1**
	06/17/13	8260B	<0.001	<0.001	<0.001	<0.0015	**2.5**
	03/19/13	8260B	*<0.005**	<0.005	<0.005	<0.0075	**2**
	11/27/12	8260B	<0.001	<0.001	<0.001	<0.0015	**2.2**
	08/23/12	8260B	<0.001	<0.001	<0.001	<0.0015	**2.3**
	06/14/12	8260B	<0.001	<0.001	<0.001	<0.0015	**1.5**
	03/21/12	8260B	<0.001	<0.001	<0.001	<0.0015	**1.6**
	12/15/11	8260B	<0.001	<0.001	<0.001	<0.0015	**1.3**
	10/24/11	8260B	<0.001	<0.001	<0.001	<0.0015	**1.3**
	06/20/11	8260B	<0.001	<0.001	<0.001	<0.0015	**1.3**
	02/24/11	8260B	<0.001	<0.001	<0.001	<0.0015	**1.1**
	11/08/10	8260B	<0.001	<0.001	<0.001	<0.0015	**1.1**
	09/27/10	8260B	<0.001	<0.001	<0.001	<0.0015	**1.1**
	06/04/10	8260B	<0.001	<0.001	<0.001	<0.0015	**1**
	03/24/10	8260B	*<0.005**	<0.005	<0.005	<0.0075	**1.1**

DEFINITIONS
NA = Not analyzed; NE = Not established
Bold and highlighted values represent values above the applicable standards
STANDARDS
WQCC 20 NMAC 6.2.3103 - Standards for Ground Water of 10,000 mg/l TDS Concentration or Less.
a) Human Health Standards; b) Other Standards for Domestic Water
40 CFR 141.61 Maximum Contaminant Levels for Organic Contaminants
NMED Risk Assessment Guidance for Investigations and Remediations Table A-1
EPA Regional Screening Level (RSL) Summary Table
NOTES
Wells marked in red were not sampled because recovery appartus was present
Items notes with a * and italics have a detection limit greater than or equal to the applicable standard.
[1] *OW-14 & OW-30 - Dedicated recovery system installed on wells - did not sample.*

8.13.1 OW-13, OW-14, OW-29, OW-30
DRO/GRO/MRO CATIONS/ANIONS Analytical Result Summary

			PARAMETERS						
STANDARDS			Fluoride (mg/L)	Chloride (mg/L)	Sulfate (mg/L)	Nitrate + Nitrite as N (mg/L)	DRO (mg/L)	GRO (mg/L)	MRO (mg/L)
WQCC 20 NMAC 6.2.3103 (DEC 2018)			**1.6**	**250.0**	**600**	NE	NE	NE	NE
40 CFR 141.62 MCL			4.0	NE	NE	**10**	NE	NE	NE
NMED TAP WATER (JUNE 2019)			1.18	NE	NE	NE	NE	NE	NE
EPA RSL TAP WATER (NOVEMBER 2019)			0.8	NE	NE	NE	NE	NE	NE
NMED SSG (JUNE 2019)			NE	NE	NE	NE	**0.0167**	**0.0101**	**0.0858**
WELL ID	DATE SAMPLED	METHOD							
OW-13	10/14/19	8015D					*<1.0**	**0.059**	*<5.0**
	08/12/19	8015D					*<1.0**	**0.061**	*<5.0**
	05/01/19	8015D					*<1.0**	**0.048**	*<5.0**
	02/05/19	8015D					*<1.0**	**0.044**	*<5.0**
	11/06/18	8015D					*<1.0**	*<0.05**	*<5.0**
	09/11/18	8015D					*<1.0**	**0.046**	*<5.0**
	05/15/18	8015D					*<1.0**	*<0.05**	*<5.0**
	02/28/18	8015D					*<1.0**	**0.06**	*<5.0**
	12/11/17	8015D					*<1.0**	**0.064**	*<5.0**
	09/06/17	8015D					*<1.0**	**0.074**	*<5.0**
	05/31/17	8015D					*<1.0**	**0.059**	*<5.0**
	02/27/17	8015D					*<1.0**	**0.057**	*<5.0**
	11/15/16	8015D					*<1.0**	*<0.05**	*<5.0**
	08/31/16	8015D					*<1.0**	**0.068**	*<5.0**
	06/06/16	8015D					*<1.0**	**0.052**	*<5.0**
	03/04/16	8015D					*<1.0**	**0.045**	*<5.0**
	10/27/15	8015D					*<1.0**	*<0.05**	*<5.0**
	08/10/15	8015D/300.0	0.27	30	150	4.9	*<1.0**	*<0.05**	*<5.0**
	09/15/14	8015D/300.0	0.22	28	150	<1.0	*<1.0**	*<0.05**	*<5.0**
	09/04/13	8015D/300.0	0.28	28	160	2.6	*<1.0**	*<0.05**	*<5.0**

8.13.1 OW-13, OW-14, OW-29, OW-30
DRO/GRO/MRO CATIONS/ANIONS Analytical Result Summary

			PARAMETERS						
STANDARDS			Fluoride (mg/L)	Chloride (mg/L)	Sulfate (mg/L)	Nitrate + Nitrite as N (mg/L)	DRO (mg/L)	GRO (mg/L)	MRO (mg/L)
WQCC 20 NMAC 6.2.3103 (DEC 2018)			**1.6**	**250.0**	**600**	NE	NE	NE	NE
40 CFR 141.62 MCL			4.0	NE	NE	**10**	NE	NE	NE
NMED TAP WATER (JUNE 2019)			1.18	NE	NE	NE	NE	NE	NE
EPA RSL TAP WATER (NOVEMBER 2019)			0.8	NE	NE	NE	NE	NE	NE
NMED SSG (JUNE 2019)			NE	NE	NE	NE	**0.0167**	**0.0101**	**0.0858**
WELL ID	DATE SAMPLED	METHOD							
OW-14 [1]	08/12/19	--	Recovery system installed						
	05/01/19	8015D					**4.4**	**29**	*<5.0**
	02/05/19	8015D					**4.3**	**36**	*<5.0**
	11/06/18	8015D					**4.4**	**33**	*<5.0**
	09/11/18	8015D					**3.9**	**40**	*<5.0**
	05/15/18	8015D					**4.4**	**30**	*<5.0**
	02/27/18	8015D					**4**	**32**	*<5.0**
	12/11/17	8015D					**4.3**	**31**	*<5.0**
	09/06/17	8015D					**4.5**	**33**	*<5.0**
	05/30/17	8015D					**4.6**	**35**	*<5.0**
	02/27/17	8015D					**4.3**	**33**	*<5.0**
	11/15/16	8015D					**3.4**	**29**	*<5.0**
	08/31/16	8015D					**4.1**	**31**	*<5.0**
	06/06/16	8015D					**4.5**	**27**	*<5.0**
	03/04/16	8015D					**2.9**	**27**	*<5.0**
	10/27/15	805D					**4.1**	**16**	*<5.0**
	08/10/15	8015D/300.0	<0.5	**320**	<2.5	<1.0	**2.7**	**8.7**	*<5.0**
	09/15/14	8015D/300.0	0.21	**330**	2.6	<1.0	**4.5**	**8.2**	*<5.0**
	09/04/13	8015D/300.0	0.21	**350**	3.2	5.9	**7.8**	**7.6**	*<5.0**

8.13.1 OW-13, OW-14, OW-29, OW-30
DRO/GRO/MRO CATIONS/ANIONS Analytical Result Summary

STANDARDS			PARAMETERS						
			Fluoride (mg/L)	Chloride (mg/L)	Sulfate (mg/L)	Nitrate + Nitrite as N (mg/L)	DRO (mg/L)	GRO (mg/L)	MRO (mg/L)
WQCC 20 NMAC 6.2.3103 (DEC 2018)			**1.6**	**250.0**	**600**	NE	NE	NE	NE
40 CFR 141.62 MCL			4.0	NE	NE	**10**	NE	NE	NE
NMED TAP WATER (JUNE 2019)			1.18	NE	NE	NE	NE	NE	NE
EPA RSL TAP WATER (NOVEMBER 2019)			0.8	NE	NE	NE	NE	NE	NE
NMED SSG (JUNE 2019)			NE	NE	NE	NE	**0.0167**	**0.0101**	**0.0858**
WELL ID	**DATE SAMPLED**	**METHOD**							
OW-29	10/14/19	8015D					*<1.0**	**2.5**	*<5.0**
	08/12/19	8015D					*<1.0**	**3.1**	*<5.0**
	05/01/19	8015D					*<1.0**	**2.4**	*<5.0**
	02/05/19	8015D					*<1.0**	**2**	*<5.0**
	11/06/18	8015D					*<1.0**	**2.5**	*<5.0**
	09/11/18	8015D					*<1.0**	**3.5**	*<5.0**
	05/16/18	8015D					*<1.0**	**1.5**	*<5.0**
	02/27/18	8015D					*<1.0**	**3.5**	*<5.0**
	12/11/17	8015D					*<1.0**	**3.6**	*<5.0**
	09/06/17	8015D					*<1.0**	**3.8**	*<5.0**
	05/30/17	8015D					**0.51**	**3.8**	*<5.0**
	02/27/17	8015D					*<1.0**	**4.5**	*<5.0**
	11/15/16	8015D					*<1.0**	**6**	*<5.0**
	08/31/16	8015D					*<1.0**	**6.7**	*<5.0**
	06/06/16	8015D					*<1.0**	**4**	*<5.0**
	03/04/16	8015D					*<1.0**	**4.2**	*<5.0**
	10/27/15	8015D					*<1.0**	**2.6**	*<5.0**
	08/11/15	8015D/300.0	0.31	170	70	<1.0	*<1.0**	**2.4**	*<5.0**
	09/15/14	8015D/300.0	0.3	160	73	<1.0	*<1.0**	**0.52**	*<5.0**
	09/04/13	8015D/300.0	0.43	160	84	3.9	*<1.0**	**0.88**	*<5.0**

8.13.1 OW-13, OW-14, OW-29, OW-30
DRO/GRO/MRO CATIONS/ANIONS Analytical Result Summary

STANDARDS			PARAMETERS						
			Fluoride (mg/L)	Chloride (mg/L)	Sulfate (mg/L)	Nitrate + Nitrite as N (mg/L)	DRO (mg/L)	GRO (mg/L)	MRO (mg/L)
WQCC 20 NMAC 6.2.3103 (DEC 2018)			**1.6**	**250.0**	**600**	NE	NE	NE	NE
40 CFR 141.62 MCL			4.0	NE	NE	**10**	NE	NE	NE
NMED TAP WATER (JUNE 2019)			1.18	NE	NE	NE	NE	NE	NE
EPA RSL TAP WATER (NOVEMBER 2019)			0.8	NE	NE	NE	NE	NE	NE
NMED SSG (JUNE 2019)			NE	NE	NE	NE	**0.0167**	**0.0101**	**0.0858**
WELL ID	**DATE SAMPLED**	**METHOD**							
OW-30 [1]	08/12/19	--	Recovery system installed						
	06/05/19	8015D					**0.97**	**2.1**	*<5.0**
	03/27/19	8015D					**0.92**	**1.9**	*<5.0**
	12/03/18	8015D					**0.92**	**1.3**	*<5.0**
	09/19/18	8015D					**1.6**	**2.8**	*<5.0**
	05/16/18	8015D					**0.72**	**2.4**	*<5.0**
	02/28/18	8015D					**0.67**	**2.9**	*<5.0**
	12/12/17	8015D					**1.1**	**3.7**	*<5.0**
	09/06/17	8015D					**0.48**	**3.5**	*<5.0**
	05/31/17	8015D					**0.81**	**3.5**	*<5.0**
	02/27/17	8015D					**0.47**	**4.2**	*<5.0**
	11/14/16	8015D					*<1.0**	**5.2**	*<5.0**
	08/31/16	8015D					*<1.0**	**6.9**	*<5.0**
	06/06/16	8015D					*<1.0**	**4**	*<5.0**
	03/08/16	8015D					*<1.0**	**4.4**	*<5.0**
	10/27/15	8015D					*<1.0**	**3.7**	*<5.0**
	08/10/15	8015D/300.0	0.23	180	42	<1.0	**3.6**	**2.1**	*<5.0**
	09/07/14	8015D/300.0	0.2	180	45	<1.0	*<1.0**	**1.3**	*<5.0**
	09/04/13	8015D/300.0	0.26	170	55	4.6	*<1.0**	**1.4**	*<5.0**

DEFINITIONS

NA = Not analyzed; NE = Not established

Bold and highlighted values represent values above the applicable standards

STANDARDS

WQCC 20 NMAC 6.2.3103 - Standards for Ground Water of 10,000 mg/l TDS Concentration or Less.

a) Human Health Standards; b) Other Standards for Domestic Water

40 CFR 141.62 Maximum Contaminant Levels for Inorganic Contaminants

NMED Risk Assessment Guidance for Investigations and Remediations Table A-1

EPA Regional Screening Level (RSL) Summary Table

NMED Soil Screening Guidance Volume 1, Table 6-4 (groundwater)

NOTES

Wells marked in red were not sampled because recovery appartus was present

Items notes with a * and italics have a detection limit greater than or equal to the applicable standard.

[1] *OW-14 & OW-30 - Dedicated recovery system installed on wells - did not sample.*

8.13.2 OW-13, OW-14, OW-29, OW-30
Total Metals Analytical Result Summary

STANDARDS			PARAMETERS												
			Arsenic (mg/L)	Barium (mg/L)	Cadmium (mg/L)	Chromium (mg/L)	Copper (mg/L)	Iron (mg/L)	Lead (mg/L)	Manganese (mg/L)	Selenium (mg/L)	Silver (mg/L)	Mercury (ug/L)	Uranium (mg/L)	Zinc (mg/L)
WQCC 20 NMAC 6.2.3103 (DEC 2018)			0.01	2	0.005	0.05	1.0	1.0	0.015	0.2	0.05	0.05	2	0.03	10
40 CFR 141.62 MCL			0.01	2.0	0.005	0.1	1.3	NE	0.015	NE	0.05	NE	2	0.03	NE
NMED TAP WATER (JUNE 2019)			0.000855	3.28	0.00624	0.0057	0.7898	13.8	NE	2.02	0.0987	0.0812	0.626	0.0592	5.96
EPA RSL TAP WATER (NOVEMBER 2019)			0.000052	3.8	0.0092	22	0.8	14	0.015	0.43	0.1	0.094	0.63	0.004	6
WELL ID	DATE SAMPLED	METHOD													
OW-13	10/14/19	200.7/200.8	0.00095	0.019	<0.002	<0.006	<0.006	<0.02	<0.0005	0.02	<0.001	<0.005	<0.02	NA	<0.01
	08/12/19	200.7/200.8	0.00079	0.018	<0.002	<0.006	<0.006	<0.02	<0.005	0.017	<0.001	<0.005	<0.2	0.015	<0.01
	05/01/19	200.7/200.8	0.0007	0.019	<0.002	<0.006	<0.006	<0.02	<0.0005	0.019	<0.001	<0.005	<0.2	0.016	<0.01
	02/05/19	200.7/200.8	0.00079	0.02	<0.002	<0.006	<0.006	<0.02	<0.0005	0.019	0.00026	<0.005	0.11	0.015	<0.01
	11/06/18	200.7/200.8	<0.001	0.02	<0.002	<0.006	<0.006	<0.02	<0.0005	0.02	<0.001	<0.005	<0.02	0.014	<0.01
	09/11/18	200.7/200.8	0.00078	0.018	<0.002	<0.006	<0.006	<0.02	<0.0005	0.02	<0.001	<0.005	0.069	0.015	<0.01
	05/15/18	200.7/200.8	0.00088	0.019	<0.002	<0.006	<0.006	<0.02	<0.0005	0.02	<0.001	<0.005	0.093	0.014	<0.01
	02/28/18	200.7/200.8	0.0009	0.021	<0.002	<0.006	<0.006	<0.02	<0.0005	0.021	<0.001	<0.005	<0.2	0.016	<0.01
	12/11/17	200.7/200.8	0.00084	0.019	0.00064	<0.006	<0.006	<0.02	<0.0005	0.022	<0.001	<0.005	0.097	0.016	<0.01
	09/06/17	200.7/200.8	<0.005	0.019	<0.002	<0.006	<0.006	<0.02	<0.0005	0.019	<0.005	<0.005	<0.2	0.018	<0.01
	05/31/17	200.7/200.8	0.00073	0.019	<0.002	<0.006	<0.006	<0.02	<0.0005	0.019	<0.001	<0.005	<0.2	NA	<0.01
	02/27/17	200.7/200.8	0.0012	0.019	<0.002	<0.006	<0.006	<0.02	<0.0005	0.019	0.0014	<0.005	<0.2	NA	<0.01
	11/15/16	200.7/200.8	0.0016	0.02	<0.002	<0.006	<0.006	<0.02	<0.0005	0.021	0.0033	<0.005	0.062	0.017	<0.01
	08/31/16	200.7/200.8	0.0015	0.019	<0.002	<0.006	<0.006	<0.02	<0.0005	0.02	0.0021	<0.005	NA	0.018	<0.01
	06/06/16	200.7/200.8	0.0019	0.021	<0.002	<0.006	<0.006	<0.02	<0.0005	0.02	0.0025	<0.005	0.06	0.019	<0.01
	03/04/16	200.7/200.8	0.001	0.018	<0.002	<0.006	<0.006	<0.02	<0.0025	0.02	0.0025	<0.005	<0.2	0.016	<0.01
	10/27/15	200.7/200.8	0.0012	0.02	<0.002	<0.006	<0.006	<0.02	<0.0005	0.021	<0.005	<0.005	<0.2	0.017	<0.01
	08/11/15	200.7/200.8	<0.001	0.02	<0.002	<0.006	<0.006	<0.02	<0.0005	0.019	<0.001	<0.005	<0.2	0.018	<0.01
	06/01/15	200.7/200.8	*<0.01**	0.02	<0.002	<0.006	<0.006	<0.02	<0.005	0.02	<0.01	<0.005	<0.2	0.017	<0.01
	03/09/15	200.7/200.8	<0.005	0.02	<0.002	<0.006	<0.006	<0.02	<0.001	0.021	<0.005	<0.005	<0.2	0.017	<0.01
	11/10/14	200.7/200.8	0.001	0.024	<0.002	<0.006	0.021	0.058	<0.001	0.038	0.0011	<0.005	<0.2	0.018	0.01
	09/15/14	200.7/200.8	0.0011	0.018	<0.002	<0.006	<0.006	<0.02	<0.001	0.017	0.0018	<0.005	<0.2	0.018	<0.01
	06/03/14	200.7/200.8	<0.005	0.02	<0.002	<0.006	<0.006	<0.02	<0.001	0.02	<0.005	<0.005	<0.2	0.016	<0.01
	03/07/14	200.7/200.8	0.0011	0.02	<0.002	<0.006	<0.006	<0.02	<0.001	0.023	<0.001	<0.005	<0.2	0.018	<0.01
	11/11/13	200.7/200.8	<0.001	0.019	<0.002	<0.006	<0.006	<0.02	<0.001	0.021	0.0012	<0.005	<0.2	0.016	<0.01
	09/04/13	200.7/200.8	<0.001	0.019	<0.002	<0.006	<0.006	<0.02	<0.001	0.025	<0.001	<0.005	<0.2	0.017	<0.01
	06/13/13	200.7/200.8	<0.001	0.019	<0.002	<0.006	<0.006	<0.02	NA	0.02	<0.001	<0.005	<0.2	0.017	<0.01
	03/19/13 [1]	200.7/200.8	<0.0025	0.018	<0.002	<0.006	<0.006	<0.02	<0.005	0.021	<0.0025	<0.005	<0.2	0.018	<0.01
	08/23/12	200.7/200.8	<0.0025	0.024	<0.002	<0.006	<0.006	<0.02	<0.005	0.01	<0.0025	<0.005	<0.2	0.017	<0.01

8.13.2 OW-13, OW-14, OW-29, OW-30
Total Metals Analytical Result Summary

STANDARDS			PARAMETERS												
			Arsenic (mg/L)	Barium (mg/L)	Cadmium (mg/L)	Chromium (mg/L)	Copper (mg/L)	Iron (mg/L)	Lead (mg/L)	Manganese (mg/L)	Selenium (mg/L)	Silver (mg/L)	Mercury (ug/L)	Uranium (mg/L)	Zinc (mg/L)
WQCC 20 NMAC 6.2.3103 (DEC 2018)			**0.01**	**2**	**0.005**	**0.05**	**1.0**	**1.0**	**0.015**	**0.2**	**0.05**	**0.05**	**2**	**0.03**	**10**
40 CFR 141.62 MCL			0.01	2.0	0.005	0.1	1.3	NE	0.015	NE	0.05	NE	2	0.03	NE
NMED TAP WATER (JUNE 2019)			0.000855	3.28	0.00624	0.0057	0.7898	13.8	NE	2.02	0.0987	0.0812	0.626	0.0592	5.96
EPA RSL TAP WATER (NOVEMBER 2019)			0.000052	3.8	0.0092	22	0.8	14	0.015	0.43	0.1	0.094	0.63	0.004	6
WELL ID	**DATE SAMPLED**	**METHOD**													
OW-14 [2]	08/12/19	--	Recovery system installed												
	05/01/19	200.7/200.8	0.0051	**2.4**	<0.002	<0.006	<0.006	**4.7**	0.000081	**2.1**	<0.001	<0.005	<0.2	0.0026	<0.01
	02/05/19	200.7/200.8	0.0058	**2.4**	<0.002	<0.006	<0.006	**5**	0.00018	**2.1**	0.00032	<0.005	0.14	0.0028	<0.01
	11/06/18	200.7/200.8	0.0058	**2.1**	<0.002	<0.006	<0.006	**4.6**	<0.0005	**2.1**	<0.001	<0.005	<0.2	0.0025	<0.01
	09/11/18	200.7/200.8	0.0059	**2.2**	<0.002	<0.006	<0.006	**5**	<0.0005	**2.1**	<0.001	0.0025	0.059	0.0028	<0.01
	05/15/18	200.7/200.8	0.0065	**2.4**	<0.002	<0.006	<0.006	**4.7**	<0.0005	**2.2**	<0.001	<0.005	0.097	0.0031	<0.01
	02/27/18	200.7/200.8	0.0079	**2.3**	<0.002	<0.006	<0.006	**4.8**	<0.0025	**2.1**	<0.01	<0.005	0.077	0.0031	<0.01
	12/11/17	200.7/200.8	0.0057	**2.3**	<0.002	<0.006	<0.006	**4.9**	<0.0005	**2.2**	<0.01	<0.005	0.11	0.0031	<0.01
	09/06/17	200.7/200.8	0.0097	**2.3**	<0.002	<0.006	0.0022	**5.1**	0.00011	**2.2**	0.013	<0.005	<0.2	0.0043	<0.01
	05/30/17	200.7/200.8	0.0074	**2.2**	<0.002	<0.006	<0.006	**4.6**	0.00014	**2.1**	0.0061	<0.005	<0.2	NA	<0.01
	02/27/17	200.7/200.8	0.0096	**2.3**	<0.002	<0.006	<0.006	**4.9**	0.00017	**2.2**	0.01	<0.005	<0.2	NA	<0.01
	11/15/16	200.7/200.8	**0.011**	**2.3**	<0.002	<0.006	<0.006	**5.1**	<0.0025	**2.3**	0.018	<0.005	<0.2	0.0041	<0.01
	08/31/16	200.7/200.8	0.0076	**2.1**	<0.002	<0.006	<0.006	**4.9**	0.00014	**2.2**	0.014	<0.005	NA	0.0059	0.015
	06/06/16	200.7/200.8	**0.016**	**2.2**	<0.002	<0.006	<0.006	**5.1**	0.0002	**2.4**	0.017	<0.005	0.068	0.0074	<0.01
	03/04/16	200.7/200.8	0.0078	1.9	<0.002	<0.006	<0.006	**4.6**	<0.0025	**2**	0.0062	<0.005	0.054	0.006	<0.01
	10/27/15	200.7/200.8	0.0094	1.9	<0.002	<0.006	<0.006	**4.6**	<0.0005	**2.1**	<0.02	<0.005	<0.2	0.0067	<0.01
	08/10/15	200.7/200.8	0.0088	1.9	<0.002	<0.006	<0.006	**4.6**	<0.0005	**2.2**	<0.01	<0.005	<0.2	0.0068	<0.01
	06/01/15	200.7/200.8	*<0.01**	1.9	<0.002	<0.006	<0.006	**4.8**	<0.005	**2.2**	<0.01	<0.005	<0.2	0.0067	<0.01
	03/09/15	200.7/200.8	*<0.02**	1.8	<0.002	<0.006	<0.006	**4.5**	<0.001	**2.1**	<0.02	<0.005	<0.2	0.0065	<0.01
	11/10/14	200.7/200.8	0.0091	1.8	<0.002	<0.006	<0.006	**4.6**	<0.001	**2.2**	<0.01	<0.005	<0.2	0.0077	<0.01
	09/15/14	200.7/200.8	**0.014**	1.9	<0.002	<0.006	<0.006	**4.7**	<0.001	**2.3**	0.018	<0.005	<0.2	0.0079	<0.01
	06/03/14	200.7/200.8	**0.011**	1.7	<0.002	<0.006	<0.006	**4.8**	<0.001	**2.3**	0.017	<0.005	<0.2	0.0076	<0.01
	03/07/14	200.7/200.8	0.01	1.7	<0.002	<0.006	<0.006	**4.7**	<0.001	**2.4**	0.01	<0.005	<0.2	0.0097	<0.01
	11/11/13	200.7/200.8	**0.011**	1.5	<0.002	<0.006	<0.006	**4.4**	<0.001	**2.2**	0.015	<0.005	<0.2	0.0094	<0.01
	09/04/13	200.8	0.01	1.5	<0.002	<0.006	<0.006	**4.5**	<0.001	**2.1**	0.011	<0.025	<0.2	0.0093	<0.01
	06/13/13	200.7/200.8	**0.011**	1.5	<0.002	<0.006	<0.006	**4.5**	0.007	**2.4**	0.014	<0.005	<0.2	0.011	<0.01
	03/19/13 [1]	200.7/200.8	0.01	1.3	<0.002	<0.006	<0.006	**4.4**	<0.005	**2.1**	0.0038	<0.005	<0.2	0.009	<0.01
	08/23/12	200.7/200.8	**0.012**	1.2	<0.002	<0.006	<0.006	**4.2**	<0.005	**2.3**	0.0066	<0.005	<0.2	0.0095	<0.01

8.13.2 OW-13, OW-14, OW-29, OW-30
Total Metals Analytical Result Summary

STANDARDS			PARAMETERS												
			Arsenic (mg/L)	Barium (mg/L)	Cadmium (mg/L)	Chromium (mg/L)	Copper (mg/L)	Iron (mg/L)	Lead (mg/L)	Manganese (mg/L)	Selenium (mg/L)	Silver (mg/L)	Mercury (ug/L)	Uranium (mg/L)	Zinc (mg/L)
WQCC 20 NMAC 6.2.3103 (DEC 2018)			**0.01**	**2**	**0.005**	**0.05**	**1.0**	**1.0**	**0.015**	**0.2**	**0.05**	**0.05**	**2**	**0.03**	**10**
40 CFR 141.62 MCL			0.01	2.0	0.005	0.1	1.3	NE	0.015	NE	0.05	NE	2	0.03	NE
NMED TAP WATER (JUNE 2019)			0.000855	3.28	0.00624	0.0057	0.7898	13.8	NE	2.02	0.0987	0.0812	0.626	0.0592	5.96
EPA RSL TAP WATER (NOVEMBER 2019)			0.000052	3.8	0.0092	22	0.8	14	0.015	0.43	0.1	0.094	0.63	0.004	6
WELL ID	**DATE SAMPLED**	**METHOD**													
OW-29	10/14/19	200.7/200.8	<0.005	0.074	<0.002	<0.006	<0.006	0.32	0.00012	**0.3**	<0.005	<0.005	<0.2	NA	<0.01
	08/12/19	200.7/200.8	0.00087	0.071	<0.002	<0.006	<0.006	0.22	<0.0005	**0.29**	<0.001	<0.005	<0.2	**0.049**	0.01
	05/01/19	200.7/200.8	0.00071	0.077	<0.002	<0.006	<0.006	0.36	0.00013	**0.34**	<0.001	<0.005	<0.2	**0.049**	<0.01
	02/05/19	200.7/200.8	0.0012	0.078	<0.002	<0.006	<0.006	0.43	0.00022	**0.33**	0.00024	<0.005	0.12	**0.048**	<0.01
	11/06/18	200.7/200.8	0.0014	0.073	<0.002	<0.006	<0.006	0.38	<0.0005	**0.3**	<0.001	<0.005	<0.2	**0.048**	<0.01
	09/11/18	200.7/200.8	0.001	0.071	<0.002	<0.006	<0.006	0.47	<0.0005	**0.31**	<0.001	0.0022	0.046	**0.051**	<0.01
	05/16/18	200.7/200.8	<0.005	0.07	<0.002	<0.006	<0.006	0.56	<0.0005	**0.32**	0.0024	<0.005	0.043	**0.054**	0.0035
	02/27/18	200.7/200.8	0.0013	0.074	<0.002	<0.006	<0.006	0.54	<0.0005	**0.35**	0.0021	0.0017	<0.2	**0.049**	<0.01
	12/11/17	200.7/200.8	*<0.01**	0.059	<0.002	<0.006	<0.006	0.3	<0.0005	**0.33**	<0.01	<0.005	0.1	**0.054**	<0.01
	09/06/17	200.7/200.8	0.0031	0.066	<0.002	<0.006	<0.006	0.27	<0.0005	**0.29**	<0.01	<0.005	<0.2	**0.053**	<0.01
	05/30/17	200.7/200.8	0.0017	0.07	<0.002	<0.006	<0.006	0.38	<0.0005	**0.32**	<0.005	<0.005	<0.2	NA	<0.01
	02/27/17	200.7/200.8	0.0026	0.07	<0.002	<0.006	<0.006	0.36	0.000098	**0.31**	0.006	<0.005	<0.2	NA	<0.01
	11/15/16	200.7/200.8	0.0023	0.071	<0.002	<0.006	<0.006	0.34	<0.0025	**0.34**	0.0088	<0.005	0.06	**0.055**	<0.01
	08/31/16	200.7/200.8	*<0.01**	0.065	<0.002	<0.006	<0.006	0.33	<0.0005	**0.28**	0.0062	<0.005	NA	**0.053**	<0.01
	06/06/16	200.7/200.8	0.0039	0.072	<0.002	<0.006	<0.006	0.36	<0.0005	**0.33**	0.0068	<0.005	0.061	**0.053**	<0.01
	03/04/16	200.7/200.8	0.0015	0.064	<0.002	<0.006	<0.006	0.38	<0.0025	**0.32**	0.0029	<0.005	<0.2	**0.053**	<0.01
	10/27/15	200.7/200.8	<0.005	0.066	<0.002	<0.006	<0.006	0.33	<0.0005	**0.3**	<0.005	<0.005	<0.2	**0.051**	<0.01
	08/11/15	200.7/200.8	<0.005	0.063	<0.002	<0.006	<0.006	0.25	<0.0005	**0.28**	<0.005	<0.005	<0.2	**0.054**	<0.01
	06/01/15	200.7/200.8	*<0.01**	0.06	<0.002	<0.006	<0.006	0.35	<0.005	**0.25**	<0.01	<0.005	<0.2	**0.054**	<0.01
	03/09/15	200.7/200.8	<0.005	0.063	<0.002	<0.006	<0.006	0.41	<0.001	**0.3**	<0.005	<0.005	<0.2	**0.061**	<0.01
	11/11/14	200.7/200.8	<0.005	0.063	<0.002	<0.006	<0.006	0.33	<0.001	**0.29**	<0.005	<0.005	<0.2	**0.055**	<0.01
	09/15/14	200.7/200.8	*<0.01**	0.058	<0.002	<0.006	<0.006	0.2	<0.001	**0.26**	<0.01	<0.005	<0.2	**0.053**	<0.01
	06/02/14	200.7/200.8	<0.005	0.063	<0.002	<0.006	<0.006	0.37	<0.001	**0.29**	0.0055	<0.005	<0.2	**0.052**	<0.01
	03/07/14	200.7/200.8	0.0014	0.063	<0.002	<0.006	<0.006	0.4	<0.001	**0.3**	<0.005	<0.005	<0.2	**0.056**	<0.01
	11/11/13	200.7/200.8	0.0018	0.061	<0.002	<0.006	<0.006	0.38	<0.001	**0.28**	0.0042	<0.005	<0.2	**0.053**	<0.01
	09/04/13	200.7/200.8	<0.001	0.061	<0.002	<0.006	<0.006	0.34	<0.001	0.028	0.0027	<0.005	<0.2	**0.056**	0.018
	06/13/13	200.7/200.8	0.0013	0.065	<0.002	<0.006	<0.006	0.52	NA	**0.32**	0.0033	<0.005	<0.2	**0.056**	<0.01
	03/19/13 [1]	200.7/200.8	<0.0025	0.059	<0.002	<0.006	<0.006	0.47	<0.005	**0.29**	<0.0025	<0.005	<0.2	**0.057**	<0.01
	08/23/12	200.7/200.8	<0.0025	0.058	<0.002	<0.006	<0.006	0.16	<0.005	**0.25**	<0.0025	<0.005	<0.2	**0.055**	<0.01

8.13.2 OW-13, OW-14, OW-29, OW-30
Total Metals Analytical Result Summary

STANDARDS			PARAMETERS												
			Arsenic (mg/L)	Barium (mg/L)	Cadmium (mg/L)	Chromium (mg/L)	Copper (mg/L)	Iron (mg/L)	Lead (mg/L)	Manganese (mg/L)	Selenium (mg/L)	Silver (mg/L)	Mercury (ug/L)	Uranium (mg/L)	Zinc (mg/L)
WQCC 20 NMAC 6.2.3103 (DEC 2018)			**0.01**	**2**	**0.005**	**0.05**	**1.0**	**1.0**	**0.015**	**0.2**	**0.05**	**0.05**	**2**	**0.03**	**10**
40 CFR 141.62 MCL			0.01	2.0	0.005	0.1	1.3	NE	0.015	NE	0.05	NE	2	0.03	NE
NMED TAP WATER (JUNE 2019)			0.000855	3.28	0.00624	0.0057	0.7898	13.8	NE	2.02	0.0987	0.0812	0.626	0.0592	5.96
EPA RSL TAP WATER (NOVEMBER 2019)			0.000052	3.8	0.0092	22	0.8	14	0.015	0.43	0.1	0.094	0.63	0.004	6
WELL ID	**DATE SAMPLED**	**METHOD**													
OW-30 [2]	08/12/19	--	Recovery system installed												
	06/05/19	200.7/200.8	0.00083	0.13	<0.002	<0.006	0.0058	0.12	0.00052	0.075	<0.001	<0.005	<0.1	**0.035**	<0.01
	03/27/19	200.7/200.8	0.008	0.14	<0.002	<0.006	<0.006	0.17	0.00059	0.073	<0.001	<0.005	<0.2	**0.04**	<0.01
	12/03/18	200.7/200.8	0.0011	0.13	<0.002	<0.006	<0.006	0.1	0.0005	0.057	<0.001	0.0021	0.082	NA	<0.01
	09/19/18	200.7/200.8	0.0013	0.12	<0.002	<0.006	<0.006	0.067	0.00043	0.054	<0.001	0.0015	0.08	**0.034**	<0.01
	05/16/18	200.7/200.8	0.0012	0.11	<0.002	<0.006	0.0055	0.071	0.00043	0.053	0.0033	<0.005	0.046	**0.042**	<0.01
	02/28/18	200.7/200.8	0.0029	0.12	<0.002	<0.006	<0.006	0.071	<0.0025	0.042	<0.005	0.0024	<0.2	**0.04**	<0.01
	12/12/17	200.7/200.8	*<0.01**	0.11	<0.002	<0.006	<0.006	0.063	0.00042	0.036	<0.01	0.0013	0.056	**0.041**	<0.01
	09/06/17	200.7/200.8	0.0036	0.11	<0.002	<0.006	0.004	0.072	0.00036	0.045	0.0089	<0.005	<0.2	**0.043**	<0.01
	05/31/17	200.7/200.8	<0.005	0.11	<0.002	<0.006	<0.006	0.088	0.00031	0.047	<0.005	<0.005	<0.2	NA	<0.01
	02/27/17	200.7/200.8	0.0025	0.11	<0.002	<0.006	<0.006	0.098	0.00082	0.045	0.007	<0.005	<0.2	NA	<0.01
	11/14/16	200.7/200.8	0.0038	0.11	<0.002	<0.006	<0.006	0.095	0.00028	0.038	0.0061	<0.005	0.088	**0.046**	<0.01
	08/31/16	200.7/200.8	*<0.01**	0.096	<0.002	<0.006	<0.006	0.071	0.00025	0.035	0.0067	<0.005	NA	**0.048**	<0.01
	06/06/16	200.7/200.8	0.0042	0.11	<0.002	<0.006	<0.006	0.11	0.0003	0.045	0.009	<0.005	0.062	**0.046**	<0.01
	03/08/16	200.7/200.8	<0.005	0.092	<0.002	<0.006	<0.006	0.052	<0.0025	0.034	0.0026	<0.005	<0.2	**0.047**	<0.01
	10/27/15	200.7/200.8	<0.005	0.097	<0.002	<0.006	<0.006	0.12	<0.0005	0.041	<0.005	<0.005	<0.2	**0.047**	<0.01
	08/10/15	200.7/200.8	<0.005	0.091	*<0.005**	<0.006	<0.006	0.073	<0.0005	0.037	<0.005	<0.005	<0.2	**0.048**	<0.01
	06/02/15	200.7/200.8	*<0.01**	0.088	<0.002	<0.006	<0.006	0.065	<0.005	0.036	<0.01	<0.005	<0.2	**0.05**	<0.01
	03/09/15	200.7/200.8	*<0.01**	0.09	<0.002	<0.006	<0.006	0.089	<0.001	0.037	<0.01	<0.005	<0.3	**0.056**	<0.01
	11/11/14	200.7/200.8	<0.005	0.093	<0.002	<0.006	<0.006	0.18	<0.001	0.036	<0.005	<0.005	<0.2	**0.05**	<0.01
	09/17/14	200.7/200.8	0.0015	0.087	<0.002	<0.006	<0.006	0.076	<0.001	0.031	0.0034	<0.005	<0.2	**0.051**	<0.01
	06/02/14	200.7/200.8	<0.005	0.56	<0.002	0.014	<0.006	**5.8**	0.0064	**0.35**	0.0055	<0.005	<0.2	**0.048**	0.015
	03/07/14	200.7/200.8	0.0033	1.3	<0.002	0.031	0.0072	**13**	0.013	**0.71**	<0.005	<0.005	<0.2	**0.054**	0.029
	11/11/13	200.7/200.8	0.0018	0.11	<0.002	<0.006	<0.006	0.47	<0.001	0.047	0.0041	<0.005	<0.2	**0.053**	<0.01
	09/04/13	200.7/200.8	0.0012	0.081	<0.002	<0.006	<0.006	0.051	<0.001	0.025	0.0029	<0.005	<0.2	**0.055**	<0.01
	06/17/13	200.7/200.8	0.0013	0.079	<0.002	<0.006	<0.006	0.055	<0.005	0.026	0.0027	<0.005	<0.2	**0.054**	<0.01
	03/19/13 [1]	200.7/200.8	<0.0025	0.078	<0.002	<0.006	<0.006	0.052	<0.005	0.02	<0.0025	<0.005	<0.2	**0.057**	<0.01
	08/23/12	200.7/200.8	<0.0025	0.078	<0.002	<0.006	<0.006	0.058	<0.005	0.018	<0.0025	<0.005	<0.2	**0.056**	<0.01

8.13.2 OW-13, OW-14, OW-29, OW-30
Total Metals Analytical Result Summary

STANDARDS	PARAMETERS												
	Arsenic (mg/L)	Barium (mg/L)	Cadmium (mg/L)	Chromium (mg/L)	Copper (mg/L)	Iron (mg/L)	Lead (mg/L)	Manganese (mg/L)	Selenium (mg/L)	Silver (mg/L)	Mercury (ug/L)	Uranium (mg/L)	Zinc (mg/L)
WQCC 20 NMAC 6.2.3103 (DEC 2018)	**0.01**	**2**	**0.005**	**0.05**	**1.0**	**1.0**	**0.015**	**0.2**	**0.05**	**0.05**	**2**	**0.03**	**10**
40 CFR 141.62 MCL	0.01	2.0	0.005	0.1	1.3	NE	0.015	NE	0.05	NE	2	0.03	NE
NMED TAP WATER (JUNE 2019)	0.000855	3.28	0.00624	0.0057	0.7898	13.8	NE	2.02	0.0987	0.0812	0.626	0.0592	5.96
EPA RSL TAP WATER (NOVEMBER 2019)	0.000052	3.8	0.0092	22	0.8	14	0.015	0.43	0.1	0.094	0.63	0.004	6
WELL ID / DATE SAMPLED / METHOD													

DEFINITIONS

NA = Not analyzed; NE = Not established

Bold and highlighted values represent values above the applicable standards

STANDARDS

WQCC 20 NMAC 6.2.3103 - Standards for Ground Water of 10,000 mg/l TDS Concentration or Less.

a) Human Health Standards; b) Other Standards for Domestic Water

40 CFR 141.62 Maximum Contaminant Levels for Inorganic Contaminants

NMED Risk Assessment Guidance for Investigations and Remediations Table A-1

EPA Regional Screening Level (RSL) Summary Table

NOTES

Wells marked in red were not sampled because recovery appartus was present

Items notes with a * and italics have a detection limit greater than or equal to the applicable standard.

1) Additon of WQCC Metals per NMED's Comment 12 from "Approval with Modifications Annual Ground Water Monitoring Report, Rev 1, dated 12/12/12", to monitor upgradient wells.

2) OW-14 & OW-30 - Dedicated recovery system installed on wells - did not sample.

8.13.3 OW-13, OW-14, OW-29, OW-30
Dissolved Metals Analytical Result Summary

STANDARDS			PARAMETERS											
			Arsenic (mg/L)	Barium (mg/L)	Cadmium (mg/L)	Chromium (mg/L)	Copper (mg/L)	Iron (mg/L)	Lead (mg/L)	Manganese (mg/L)	Selenium (mg/L)	Silver (mg/L)	Uranium (mg/L)	Zinc (mg/L)
WQCC 20 NMAC 6.2.3103 (DEC 2018)			**0.01**	**2**	**0.005**	**0.05**	**1.0**	**1.0**	**0.015**	**0.2**	**0.05**	**0.05**	**0.03**	**10**
40 CFR 141.62 MCL			0.01	2.0	0.005	0.1	1.3	NE	0.015	NE	0.05	NE	0.03	NE
NMED TAP WATER (JUNE 2019)			0.000855	3.28	0.00624	0.0057	0.7898	13.8	NE	2.02	0.0987	0.0812	0.0592	5.96
EPA RSL TAP WATER (NOVEMBER 2019)			0.000052	3.8	0.0092	22	0.8	14	0.015	0.43	0.1	0.094	0.004	6
WELL ID	**DATE SAMPLED**	**METHOD**												
OW-13	10/14/19	200.7/200.8	0.00079	0.019	<0.002	<0.006	0.0015	<0.02	<0.0005	0.019	<0.001	<0.005	NA	0.0087
	08/12/19	200.7/200.8	0.00079	0.018	<0.002	<0.006	<0.006	<0.02	<0.0005	0.017	<0.001	<0.005	0.015	0.0068
	05/01/19	200.7/200.8	0.00069	0.019	<0.002	<0.006	0.0017	<0.02	<0.0005	0.02	<0.001	<0.005	0.016	0.12
	02/05/19	200.7/200.8	0.00069	0.02	<0.002	<0.006	<0.006	<0.02	<0.0005	0.02	<0.001	<0.005	0.015	0.018
	11/06/18	200.7/200.8	<0.001	0.019	<0.002	<0.006	<0.006	<0.02	<0.0005	0.023	<0.001	<0.005	0.016	0.018
	09/11/18	200.7/200.8	0.00078	0.019	<0.002	<0.006	<0.006	<0.02	<0.0005	0.02	<0.001	<0.005	0.015	0.007
	05/15/18	200.7/200.8	0.0008	0.018	<0.002	<0.006	<0.006	<0.02	<0.005	0.02	<0.001	<0.005	0.016	0.006
	02/28/18	200.7/200.8	<0.005	0.018	<0.002	<0.006	<0.006	<0.02	<0.0005	0.02	<0.005	<0.005	0.014	0.0074
	12/11/17	200.7/200.8	<0.005	0.019	<0.002	<0.006	<0.006	<0.02	<0.0005	0.023	<0.005	<0.005	0.015	0.0095
	09/06/17	200.7/200.8	0.0012	0.019	<0.002	0.0057	<0.006	0.023	<0.0005	0.02	0.0023	<0.005	0.017	0.046
	05/31/17	200.7/200.8	0.00099	0.02	<0.002	<0.006	<0.006	<0.02	<0.0005	0.019	<0.005	<0.005	NA	0.014
	02/27/17	200.7/200.8	0.0011	0.02	<0.002	<0.006	<0.006	<0.02	<0.0005	0.02	0.0036	<0.005	NA	0.029
	11/15/16	200.7/200.8	0.0013	0.02	<0.002	<0.006	<0.006	<0.02	<0.0005	0.021	0.0026	<0.005	0.017	<0.01
	08/31/16	200.7/200.8	0.0015	0.02	<0.002	<0.006	<0.006	<0.02	<0.0025	0.021	0.002	<0.005	0.017	0.042
	06/06/16	200.7/200.8	0.0019	0.02	<0.002	<0.006	<0.006	<0.02	<0.0005	0.02	0.0035	<0.005	0.018	0.014
	03/04/16	200.7/200.8	0.0012	0.018	<0.002	<0.006	0.0053	<0.02	<0.0005	0.019	0.0011	<0.005	0.017	0.0093
	10/27/15	200.7/200.8	<0.005	0.021	<0.002	<0.006	<0.006	<0.02	<0.0005	0.023	<0.005	<0.005	0.016	<0.01
	08/11/15	200.7/200.8	<0.005	0.018	<0.002	<0.006	<0.006	<0.02	<0.0025	0.018	<0.005	<0.005	0.017	<0.01
	06/01/15	200.7/200.8	*<0.01**	0.02	<0.002	<0.006	<0.006	<0.02	*<0.1**	0.021	<0.01	<0.005	0.016	<0.01
	03/09/15	200.7/200.8	<0.005	0.02	<0.002	<0.006	<0.006	<0.02	<0.001	0.022	<0.005	<0.005	0.017	<0.01
	11/10/14	200.7/200.8	0.0011	0.019	<0.002	<0.006	<0.006	<0.02	<0.01	0.022	<0.001	<0.005	0.016	0.063
	09/15/14	200.7/200.8	0.0015	0.018	<0.002	<0.006	<0.006	<0.02	<0.001	0.018	0.0026	<0.005	0.017	<0.01
	06/03/14	200.7/200.8	0.0012	0.017	<0.002	<0.006	<0.006	<0.02	<0.005	0.017	0.0022	<0.005	0.015	<0.01
	03/07/14	200.7/200.8	<0.001	0.019	<0.002	<0.006	<0.006	<0.02	<0.001	0.02	<0.001	<0.005	0.018	0.017
	11/11/13	200.7/200.8	0.0012	0.02	<0.002	<0.006	<0.006	<0.02	<0.001	0.021	0.002	<0.005	0.016	0.014
	09/04/13	200.7/200.8	<0.005	0.019	<0.002	<0.006	<0.006	<0.02	<0.005	0.024	<0.005	<0.005	0.017	<0.01
	06/13/13	200.7/200.8	0.0011	0.019	<0.002	<0.006	<0.006	<0.02	<0.001	0.021	0.0024	<0.005	0.017	0.048
	03/19/13 [1]	200.7/200.8	<0.001	0.018	<0.002	<0.006	<0.006	<0.02	<0.005	0.019	<0.001	<0.005	0.017	<0.01
	08/23/12	200.7/200.8	<0.001	0.022	<0.002	<0.006	<0.006	<0.02	<0.005	0.011	<0.001	<0.005	0.016	0.016

8.13.3 OW-13, OW-14, OW-29, OW-30
Dissolved Metals Analytical Result Summary

STANDARDS			PARAMETERS											
			Arsenic (mg/L)	Barium (mg/L)	Cadmium (mg/L)	Chromium (mg/L)	Copper (mg/L)	Iron (mg/L)	Lead (mg/L)	Manganese (mg/L)	Selenium (mg/L)	Silver (mg/L)	Uranium (mg/L)	Zinc (mg/L)
WQCC 20 NMAC 6.2.3103 (DEC 2018)			**0.01**	**2**	**0.005**	**0.05**	**1.0**	**1.0**	**0.015**	**0.2**	**0.05**	**0.05**	**0.03**	**10**
40 CFR 141.62 MCL			0.01	2.0	0.005	0.1	1.3	NE	0.015	NE	0.05	NE	0.03	NE
NMED TAP WATER (JUNE 2019)			0.000855	3.28	0.00624	0.0057	0.7898	13.8	NE	2.02	0.0987	0.0812	0.0592	5.96
EPA RSL TAP WATER (NOVEMBER 2019)			0.000052	3.8	0.0092	22	0.8	14	0.015	0.43	0.1	0.094	0.004	6
WELL ID	DATE SAMPLED	METHOD												
OW-14 [2]	08/12/19	--	Recovery system installed											
	05/01/19	200.7/200.8	0.0049	**2.2**	<0.002	<0.006	<0.006	**4.7**	0.000057	**2**	0.00018	<0.005	0.0026	0.095
	02/05/19	200.7/200.8	0.0052	**2.2**	<0.002	<0.006	<0.006	**4.6**	0.000055	**2**	<0.001	<0.005	0.0028	0.02
	11/06/18	200.7/200.8	0.0047	**2.2**	<0.002	<0.006	<0.006	**4.4**	<0.0005	**2.1**	0.011	<0.005	0.0029	<0.01
	09/11/18	200.7/200.8	0.0056	**2.3**	<0.002	<0.006	<0.006	**4.7**	<0.0005	**2.2**	<0.001	<0.005	0.0029	0.0099
	05/15/18	200.7/200.8	0.006	**2.2**	<0.002	<0.006	<0.006	**4.4**	<0.0005	**2**	<0.001	<0.005	0.0033	0.0054
	02/27/18	200.7/200.8	0.0064	**2.1**	<0.002	<0.006	<0.006	**4.4**	<0.0005	**1.9**	<0.01	<0.005	0.0034	0.0074
	12/11/17	200.7/200.8	0.0083	**2.1**	<0.002	<0.006	<0.006	**4.4**	<0.0005	**2.1**	0.011	<0.005	0.0033	0.0085
	09/06/17	200.7/200.8	0.009	**2.2**	<0.002	<0.006	<0.006	**4.6**	<0.0005	**2.1**	0.013	<0.005	0.0042	0.029
	05/30/17	200.7/200.8	0.0076	**2.2**	<0.002	<0.006	<0.006	**4.5**	<0.0005	**2.1**	0.0069	<0.005	NA	0.026
	02/27/17	200.7/200.8	0.0083	**2.3**	<0.002	<0.006	<0.006	**5.1**	<0.0005	**2.2**	0.013	<0.005	NA	0.015
	11/15/16	200.7/200.8	0.0099	**2.2**	<0.002	<0.006	<0.006	**4.7**	<0.0005	**2.1**	0.015	<0.005	0.0048	<0.01
	08/31/16	200.7/200.8	0.0086	**2.2**	<0.002	<0.006	<0.006	**4.9**	<0.0005	**2.2**	0.012	<0.005	0.0054	0.028
	06/06/16	200.7/200.8	**0.012**	**2.2**	<0.002	<0.006	<0.006	**4.9**	<0.0005	**2.3**	0.022	<0.005	0.0068	<0.01
	03/04/16	200.7/200.8	0.0082	1.9	<0.002	<0.006	<0.006	**4.3**	0.00012	**2.1**	0.0048	<0.005	0.0065	0.01
	10/27/15	200.7/200.8	**0.011**	**2.1**	<0.002	<0.006	<0.006	**4.7**	<0.0005	**2.3**	0.016	<0.005	0.0065	<0.01
	08/10/15	200.7/200.8	0.0091	1.9	<0.002	0.0063	<0.006	**4.5**	<0.0025	**2**	<0.01	<0.005	0.006	<0.01
	06/01/15	200.7/200.8	*<0.01**	1.9	<0.002	<0.006	<0.006	**5**	<0.01	**2.3**	<0.01	<0.005	<0.01	0.12
	03/09/15	200.7/200.8	*<0.02**	1.9	<0.002	<0.006	<0.006	**4.7**	<0.001	**2.2**	<0.02	<0.005	0.0067	<0.01
	11/10/14	200.7/200.8	*<0.01**	1.8	<0.002	<0.006	<0.006	**4.5**	<0.01	**2.2**	<0.01	<0.005	<0.01	0.036
	09/15/14	200.7/200.8	**0.013**	1.8	<0.002	<0.006	<0.006	**4.5**	<0.001	**2.2**	0.017	<0.005	0.0071	<0.01
	06/03/14	200.7/200.8	**0.011**	1.7	<0.002	<0.006	<0.006	**4.6**	<0.005	**2.3**	0.018	<0.005	0.0083	0.017
	03/07/14	200.7/200.8	0.0084	1.6	<0.002	<0.006	<0.006	**4.2**	<0.001	**2.1**	<0.005	<0.005	0.0097	<0.01
	11/11/13	200.7/200.8	**0.012**	1.6	<0.002	<0.006	<0.006	**4.6**	<0.001	**2.3**	0.015	<0.005	0.0093	0.021
	09/04/13	200.7/200.8	0.01	1.5	<0.002	<0.006	<0.006	**4.5**	<0.001	**2.1**	0.011	<0.025	0.0093	<0.01
	06/13/13	200.7/200.8	**0.012**	1.4	<0.002	<0.006	<0.006	**4.6**	<0.001	**2.3**	0.017	<0.005	0.011	<0.01
	03/19/13 [1]	200.7/200.8	0.0093	1.3	<0.002	<0.006	<0.006	**4.1**	<0.005	**2.1**	0.0045	<0.005	0.0087	<0.01
	08/23/12	200.7/200.8	0.01	1.1	<0.002	<0.006	<0.006	**4.4**	<0.005	**2.3**	0.0067	<0.005	0.0091	0.039

8.13.3 OW-13, OW-14, OW-29, OW-30
Dissolved Metals Analytical Result Summary

STANDARDS			PARAMETERS											
			Arsenic (mg/L)	Barium (mg/L)	Cadmium (mg/L)	Chromium (mg/L)	Copper (mg/L)	Iron (mg/L)	Lead (mg/L)	Manganese (mg/L)	Selenium (mg/L)	Silver (mg/L)	Uranium (mg/L)	Zinc (mg/L)
WQCC 20 NMAC 6.2.3103 (DEC 2018)			**0.01**	**2**	**0.005**	**0.05**	**1.0**	**1.0**	**0.015**	**0.2**	**0.05**	**0.05**	**0.03**	**10**
40 CFR 141.62 MCL			0.01	2.0	0.005	0.1	1.3	NE	0.015	NE	0.05	NE	0.03	NE
NMED TAP WATER (JUNE 2019)			0.000855	3.28	0.00624	0.0057	0.7898	13.8	NE	2.02	0.0987	0.0812	0.0592	5.96
EPA RSL TAP WATER (NOVEMBER 2019)			0.000052	3.8	0.0092	22	0.8	14	0.015	0.43	0.1	0.094	0.004	6
WELL ID	DATE SAMPLED	METHOD												
OW-29	10/14/19	200.7/200.8	0.00062	0.074	<0.002	<0.006	0.0026	0.2	<0.0005	**0.33**	<0.001	0.0018	NA	0.078
	08/12/19	200.7/200.8	0.00069	0.071	<0.002	<0.006	<0.006	0.18	<0.005	**0.29**	<0.001	0.00097	**0.053**	0.0036
	05/01/19	200.7/200.8	0.00061	0.072	<0.002	<0.006	<0.006	0.27	<0.0005	**0.33**	<0.001	<0.005	**0.051**	0.064
	02/05/19	200.7/200.8	0.00065	0.072	<0.002	<0.006	<0.006	0.22	<0.0005	**0.31**	<0.0002	0.001	**0.048**	0.02
	11/06/18	200.7/200.8	<0.001	0.071	<0.002	<0.006	<0.006	0.24	<0.0005	**0.3**	<0.001	<0.005	**0.052**	<0.01
	09/11/18	200.7/200.8	0.00086	0.073	<0.002	<0.006	<0.006	0.26	<0.0005	**0.33**	<0.001	<0.005	**0.048**	0.0062
	05/16/18	200.7/200.8	<0.005	0.064	<0.002	<0.006	<0.006	0.21	<0.0025	**0.28**	0.004	<0.005	**0.047**	0.011
	02/27/18	200.7/200.8	<0.005	0.067	<0.002	<0.006	<0.006	0.25	<0.0005	**0.31**	<0.005	<0.005	**0.048**	0.0071
	12/11/17	200.7/200.8	0.0028	0.019	<0.002	<0.006	<0.006	<0.02	<0.0025	0.022	0.006	<0.005	**0.048**	0.0099
	09/06/17	200.7/200.8	0.0026	0.067	<0.002	<0.006	<0.006	0.26	<0.0005	**0.29**	<0.02	<0.005	**0.052**	0.023
	05/30/17	200.7/200.8	0.0018	0.069	<0.002	<0.006	<0.006	0.28	<0.0005	**0.31**	0.0038	<0.005	NA	0.024
	02/27/17	200.7/200.8	0.002	0.07	<0.002	<0.006	<0.006	0.31	<0.0005	**0.32**	0.0064	<0.005	NA	0.028
	11/15/16	200.7/200.8	0.0027	0.07	<0.002	<0.006	<0.006	0.32	<0.0005	**0.34**	0.0076	<0.005	**0.053**	<0.01
	08/31/16	200.7/200.8	0.0026	0.068	<0.002	<0.006	<0.006	0.27	<0.0025	**0.3**	0.0065	<0.005	**0.054**	0.028
	06/06/16	200.7/200.8	0.0032	0.07	<0.002	<0.006	<0.006	0.31	<0.0005	**0.33**	0.008	<0.005	**0.054**	<0.01
	03/04/16	200.7/200.8	0.0015	0.063	<0.002	<0.006	<0.006	0.34	<0.0005	**0.31**	0.0031	<0.005	**0.049**	0.015
	10/27/15	200.7/200.8	<0.005	0.069	<0.002	<0.006	<0.006	0.27	<0.0005	**0.32**	<0.01	<0.005	**0.054**	<0.01
	08/11/15	200.7/200.8	<0.005	0.059	<0.002	<0.006	<0.006	0.24	<0.0025	**0.27**	<0.005	<0.005	**0.053**	0.012
	06/01/15	200.7/200.8	*<0.01**	0.064	<0.002	<0.006	<0.006	0.34	<0.01	**0.29**	<0.01	<0.005	**0.053**	<0.01
	03/09/15	200.7/200.8	<0.001	0.063	<0.002	<0.006	<0.006	0.31	<0.001	**0.31**	<0.01	<0.005	**0.053**	<0.01
	11/11/14	200.7/200.8	*<0.01**	0.061	<0.002	<0.006	<0.006	0.23	<0.01	**0.28**	<0.01	<0.005	**0.054**	0.029
	09/15/14	200.7/200.8	*<0.01**	0.061	<0.002	<0.006	<0.006	0.18	<0.001	**0.26**	<0.01	<0.005	**0.054**	<0.01
	06/02/14	200.7/200.8	<0.005	0.057	<0.002	<0.006	<0.006	0.2	<0.005	**0.28**	0.0064	<0.005	**0.054**	<0.01
	03/07/14	200.7/200.8	<0.005	0.059	<0.002	<0.006	<0.006	0.28	<0.001	**0.29**	<0.005	<0.005	**0.053**	<0.01
	11/11/13	200.7/200.8	0.0019	0.063	<0.002	<0.006	<0.006	0.33	<0.001	**0.3**	0.0052	<0.005	**0.053**	0.028
	09/04/13	200.7/200.8	<0.005	0.062	<0.002	<0.006	<0.006	0.31	<0.005	**0.28**	<0.005	<0.005	**0.06**	<0.01
	06/13/13	200.7/200.8	0.0018	0.06	<0.002	<0.006	<0.006	0.45	<0.001	**0.31**	0.0055	<0.005	**0.055**	0.017
	03/19/13 [1]	200.7/200.8	0.001	0.054	<0.002	<0.006	<0.006	0.34	<0.005	**0.27**	0.0011	<0.005	**0.054**	<0.01
	08/23/12	200.7/200.8	0.001	0.056	<0.002	<0.006	<0.006	0.046	<0.005	**0.24**	0.0019	<0.005	**0.053**	<0.01

8.13.3 OW-13, OW-14, OW-29, OW-30
Dissolved Metals Analytical Result Summary

STANDARDS			PARAMETERS											
			Arsenic (mg/L)	Barium (mg/L)	Cadmium (mg/L)	Chromium (mg/L)	Copper (mg/L)	Iron (mg/L)	Lead (mg/L)	Manganese (mg/L)	Selenium (mg/L)	Silver (mg/L)	Uranium (mg/L)	Zinc (mg/L)
WQCC 20 NMAC 6.2.3103 (DEC 2018)			**0.01**	**2**	**0.005**	**0.05**	**1.0**	**1.0**	**0.015**	**0.2**	**0.05**	**0.05**	**0.03**	**10**
40 CFR 141.62 MCL			0.01	2.0	0.005	0.1	1.3	NE	0.015	NE	0.05	NE	0.03	NE
NMED TAP WATER (JUNE 2019)			0.000855	3.28	0.00624	0.0057	0.7898	13.8	NE	2.02	0.0987	0.0812	0.0592	5.96
EPA RSL TAP WATER (NOVEMBER 2019)			0.000052	3.8	0.0092	22	0.8	14	0.015	0.43	0.1	0.094	0.004	6
WELL ID	DATE SAMPLED	METHOD												
OW-30 [2]	08/12/19	--	Recovery system installed											
	06/05/19	200.7/200.8	0.00062	0.12	<0.002	<0.006	0.0056	0.057	0.00055	0.067	<0.001	<0.005	**0.035**	0.013
	03/27/19	200.7/200.8	0.00069	0.13	<0.002	<0.006	<0.006	0.055	0.00041	0.068	<0.001	0.0014	**0.036**	0.034
	12/03/18	200.7/200.8	0.00084	0.12	<0.002	<0.006	0.0041	0.061	0.00042	0.053	<0.001	<0.005	NA	0.034
	09/19/18	200.7/200.8	0.001	0.12	<0.002	<0.006	0.0067	0.06	0.00044	0.051	<0.001	<0.005	**0.041**	0.0065
	05/16/18	200.7/200.8	0.0046	0.11	<0.002	<0.006	0.0064	0.061	<0.0025	0.052	<0.01	<0.005	**0.037**	0.0064
	02/28/18	200.7/200.8	<0.005	0.12	<0.002	<0.006	<0.006	0.064	0.0003	0.04	<0.005	<0.005	**0.035**	0.0066
	12/12/17	200.7/200.8	0.005	0.11	<0.002	<0.006	0.0037	0.058	<0.0025	0.035	<0.02	<0.005	**0.04**	0.0083
	09/06/17	200.7/200.8	0.003	0.11	<0.002	<0.006	<0.006	0.067	0.00035	0.044	<0.02	<0.005	**0.042**	0.023
	05/31/17	200.7/200.8	0.0019	0.11	<0.002	<0.006	<0.006	0.068	0.00029	0.045	0.0041	<0.005	NA	0.023
	02/27/17	200.7/200.8	0.0018	0.11	<0.002	<0.006	<0.006	0.061	0.0003	0.044	0.0072	<0.005	NA	0.023
	11/14/16	200.7/200.8	0.0032	0.1	<0.002	<0.006	<0.006	0.087	0.00028	0.041	0.0094	<0.005	**0.044**	<0.01
	08/31/16	200.7/200.8	0.0031	0.1	<0.002	<0.006	<0.006	0.071	0.00019	0.038	0.0075	<0.005	**0.046**	0.044
	06/06/16	200.7/200.8	0.0036	0.1	<0.002	<0.006	<0.006	0.062	0.0002	0.043	0.0095	<0.005	**0.047**	<0.01
	03/08/16	200.7/200.8	0.0019	0.091	<0.002	<0.006	<0.006	0.061	0.00022	0.037	0.0043	<0.005	**0.049**	<0.01
	10/27/15	200.7/200.8	<0.005	0.1	<0.002	<0.006	0.0088	0.064	<0.01	0.041	0.0077	<0.005	**0.045**	<0.01
	08/10/15	200.7/200.8	<0.005	0.088	<0.002	<0.006	<0.006	0.071	<0.0025	0.037	<0.005	<0.005	**0.048**	0.011
	06/02/15	200.7/200.8	*<0.01**	0.082	<0.002	<0.006	<0.006	0.067	<0.01	0.031	<0.01	<0.005	**0.049**	0.017
	03/09/15	200.7/200.8	*<0.01**	0.09	<0.002	<0.006	<0.006	0.064	<0.001	0.037	<0.01	<0.005	**0.048**	0.015
	11/11/14	200.7/200.8	*<0.01**	0.086	<0.002	<0.006	<0.006	0.051	<0.01	0.034	<0.01	<0.005	**0.05**	0.029
	09/17/14	200.7/200.8	<0.005	0.086	<0.002	<0.006	<0.006	0.067	<0.005	0.033	<0.005	<0.005	**0.049**	0.012
	06/02/14	200.7/200.8	<0.005	0.17	<0.002	<0.006	<0.006	**2.3**	<0.005	0.082	<0.01	<0.005	**0.051**	<0.01
	03/07/14	200.7/200.8	<0.005	0.29	<0.002	0.014	<0.006	**7.2**	0.0023	0.18	<0.005	<0.005	**0.05**	0.012
	11/11/13	200.7/200.8	0.0017	0.084	<0.002	<0.006	<0.006	0.06	<0.001	0.031	0.0046	<0.005	**0.05**	0.022
	09/04/13	200.7/200.8	<0.005	0.08	<0.002	<0.006	<0.006	0.04	<0.005	0.028	<0.005	<0.005	**0.059**	<0.01
	06/17/13	200.7/200.8	0.0019	0.078	<0.002	<0.006	<0.006	0.048	<0.005	0.025	0.0055	<0.005	**0.054**	0.01
	03/19/13 [1]	200.7/200.8	0.0011	0.073	<0.002	<0.006	<0.006	0.051	<0.005	0.023	0.0023	<0.005	**0.054**	<0.01
	08/23/12	200.7/200.8	0.001	0.074	<0.002	<0.006	<0.006	<0.02	<0.005	0.015	0.0017	<0.005	**0.052**	0.036

8.13.3 OW-13, OW-14, OW-29, OW-30
Dissolved Metals Analytical Result Summary

STANDARDS	PARAMETERS											
	Arsenic (mg/L)	Barium (mg/L)	Cadmium (mg/L)	Chromium (mg/L)	Copper (mg/L)	Iron (mg/L)	Lead (mg/L)	Manganese (mg/L)	Selenium (mg/L)	Silver (mg/L)	Uranium (mg/L)	Zinc (mg/L)
WQCC 20 NMAC 6.2.3103 (DEC 2018)	**0.01**	**2**	**0.005**	**0.05**	**1.0**	**1.0**	**0.015**	**0.2**	**0.05**	**0.05**	**0.03**	**10**
40 CFR 141.62 MCL	0.01	2.0	0.005	0.1	1.3	NE	0.015	NE	0.05	NE	0.03	NE
NMED TAP WATER (JUNE 2019)	0.000855	3.28	0.00624	0.0057	0.7898	13.8	NE	2.02	0.0987	0.0812	0.0592	5.96
EPA RSL TAP WATER (NOVEMBER 2019)	0.000052	3.8	0.0092	22	0.8	14	0.015	0.43	0.1	0.094	0.004	6
WELL ID / DATE SAMPLED / METHOD												

DEFINITIONS

NA = Not analyzed; NE = Not established

Bold and highlighted values represent values above the applicable standards

STANDARDS

WQCC 20 NMAC 6.2.3103 - Standards for Ground Water of 10,000 mg/l TDS Concentration or Less.

a) Human Health Standards; b) Other Standards for Domestic Water

40 CFR 141.62 Maximum Contaminant Levels for Inorganic Contaminants

NMED Risk Assessment Guidance for Investigations and Remediations Table A-1

EPA Regional Screening Level (RSL) Summary Table

NOTES

Wells marked in red were not sampled because recovery appartus was present

Items notes with a * and italics have a detection limit greater than or equal to the applicable standard.

1) Additon of WQCC Metals per NMED's Comment 12 from "Approval with Modifications Annual Ground Water Monitoring Report, Rev 1, dated 12/12/12", to monitor upgradient wells.

2) OW-14 & OW-30 - Dedicated recovery system installed on wells - did not sample.

8.13.4 OW-13, OW-14, OW-29, OW-30

Volatile Organic Compounds Analytical Result Summary

			PARAMETERS														
STANDARDS			1,2,4-Trimethyl benzene (mg/L)	1,3,5-Trimethyl benzene (mg/L)	1,2-Dichloro ethane (EDC) (mg/L)	1,2-Dibro methane (EDB) [1] (mg/L)	Naphthalene (mg/L)	1-Methyl naphthalene (mg/L)	Acetone (mg/L)	2-Butanone (mg/L)	Chloro ethane (mg/L)	1,1-Dichloro ethane (mg/L)	Isopropyl benzene (mg/L)	Methylene Chloride (mg/L)	n-Butyl benzene (mg/L)	n-Propyl benzene (mg/L)	sec-Butyl benzene (mg/L)
WQCC 20 NMAC 6.2.3103 (DEC 2018)			NE	NE	**0.005**	**0.00005**	**0.03**	NE	NE	NE	NE	**0.025**	NE	**0.005**	NE	NE	NE
40 CFR 141.61 MCL			NE	NE	0.005	0.00005	NE	NE	NE	NE	NE	NE	NE	0.005	NE	NE	NE
NMED TAP WATER (JUNE 2019)			NE	NE	0.0017	0.0000747	0.00165	**0.0114**	**14.06**	**5.56**	**20.86**	0.0275	**0.447**	0.1180	NE	NE	NE
EPA RSL TAP WATER (NOVEMBER 2019)			**0.056**	**0.06**	0.0017	0.0000075	0.00017	0.0011	14	5.6	20.9	0.0028	0.45	0.011	**1**	**0.66**	**2**
WELL ID	DATE SAMPLED	METHOD															
OW-13	10/14/19	8260B/8011(504.1EDB)	<0.001		0.0008	<0.0000093	<0.002	<0.004	0.0064	0.0037		<0.001	<0.001		<0.003	<0.001	<0.001
	08/12/19	8260B/8011(504.1EDB)	<0.001		0.00091	<0.0000094	<0.002	<0.004	<0.01			<0.001	<0.001		<0.003	<0.001	<0.001
	05/01/19	8260B/8011(504.1EDB)	<0.001		0.00062	<0.0000094	<0.002	<0.004	<0.01			<0.001	<0.001		<0.003	<0.001	<0.001
	02/05/19	8260B/8011(504.1EDB)	<0.001		0.00084	<0.0000096	<0.002	<0.004	<0.01			<0.001	<0.001		<0.003	<0.001	<0.001
	11/06/18	8260B/8011(504.1EDB)	<0.001		<0.001	<0.0000094	<0.002	<0.004	<0.01			<0.001	<0.001		<0.003	<0.001	<0.001
	09/11/18	8260B/8011(504.1EDB)	<0.0001		0.00076	<0.0000094	<0.002	<0.004	0.0045			<0.001	<0.001		<0.001	<0.001	<0.001
	05/15/18	8260B/8011(504.1EDB)	<0.001		0.00081	<0.0000094	<0.002	<0.004	0.0011			<0.001	<0.001		<0.003	<0.001	<0.001
	02/28/18	8260B/8011(504.1EDB)	<0.001		0.00077	*<0.001**	<0.002	<0.004	0.0012			<0.001	<0.001		<0.003	<0.001	<0.001
	12/11/17	8260B/8011(504.1EDB)	<0.001		0.00087	*<0.001**	<0.002	<0.004	0.0036			<0.001	<0.001		<0.003	<0.001	<0.001
	09/06/17	8260B	<0.001		0.00077	*<0.001**	<0.002	<0.004	<0.01			<0.001	<0.001		<0.003	<0.001	<0.001
	05/31/17	8260B	<0.001		0.00084	*<0.001**	<0.002	<0.004	0.0036			<0.001	<0.001		<0.003	<0.001	<0.001
	02/27/17	8260B	<0.001		0.00085	*<0.001**	<0.002	<0.004	<0.01			<0.001	<0.001		<0.003	<0.001	<0.001
	11/15/16	8260B/8011(504.1EDB)	<0.001		0.00076	*<0.01**	<0.002	<0.004				<0.001	<0.001		<0.003	<0.001	<0.001
	08/31/16	8260B	<0.001		0.00079	*<0.001**	<0.002	<0.004				<0.001	<0.001		<0.003	<0.001	<0.001
	06/06/16	8260B	<0.001		**0.75**	*<0.001**	<0.002	<0.004				<0.001	<0.001		<0.003	<0.001	<0.001
	03/04/16	8260B	<0.001		0.0008	*<0.001**	<0.002	<0.004				<0.001	<0.001		<0.003	<0.001	<0.001
	10/27/15	8260B	<0.001		<0.001		<0.002	<0.004				<0.001	<0.001		<0.003	<0.001	<0.001
	08/11/15	8260B	<0.001		<0.001		<0.002	<0.004				<0.004	<0.001		<0.003	<0.001	<0.001
	06/01/15	8260B	<0.001		<0.001		<0.002	<0.004				<0.001	<0.001		<0.003	<0.001	<0.001
	03/09/15	8260B	<0.001		<0.001		<0.002	<0.004				<0.001	<0.001		<0.003	<0.001	<0.001
	11/10/14	8260B	<0.001		<0.001		<0.002	<0.004				<0.001	<0.001		<0.003	<0.001	<0.001
	09/15/14	8260B	<0.001		<0.001		<0.002	<0.004				<0.001	<0.001		<0.003	<0.001	<0.001
	06/03/14	8260B	<0.001		<0.001		<0.002	<0.004				<0.004	<0.001		<0.003	<0.001	<0.001
	03/07/14	8260B	<0.001		<0.001		<0.002	<0.004				<0.001	<0.001		<0.003	<0.001	<0.001
	11/11/13	8260B	<0.001		<0.001		<0.002	<0.004				<0.001	<0.001		<0.003	<0.001	<0.001
	09/04/13	8260B	<0.001		<0.001		<0.002	<0.004				<0.001	<0.001		<0.003	<0.001	<0.001
	06/13/13	8260B	<0.001		<0.001		<0.002	<0.004				<0.001	<0.001		<0.003	<0.001	<0.001
	03/19/13	8260B	<0.005		*<0.005**		<0.01	<0.004				<0.001	<0.001		<0.003	<0.001	<0.001
	11/27/12	8260B	<0.001		<0.001		<0.002	<0.004				<0.001	<0.001		<0.003	<0.001	<0.001
	08/23/12	8260B	<0.001		<0.001		<0.002	<0.004				<0.001	<0.001		<0.003	<0.001	<0.001
	06/14/12	8260B	<0.001		<0.001		<0.002	<0.004				<0.001	<0.001		<0.001	<0.001	<0.001
	03/21/12	8260B	<0.001		<0.001		<0.002	<0.004				<0.001	<0.001		<0.001	<0.001	<0.001
	12/13/11	8260B	<0.001		<0.001		<0.002	<0.004				<0.001	<0.001		<0.001	<0.001	<0.001
	10/25/11	8260B	<0.001		<0.001		<0.002	<0.004				<0.001	<0.001		<0.001	<0.001	<0.001
	06/20/11	8260B	<0.001		<0.001		<0.002	<0.004				<0.001	<0.001		<0.001	<0.001	<0.001
	02/24/11	8260B	<0.001		<0.001		<0.002	<0.004				<0.001	<0.001		<0.001	<0.001	<0.001

8.13.4 OW-13, OW-14, OW-29, OW-30

Volatile Organic Compounds Analytical Result Summary

			PARAMETERS														
STANDARDS			1,2,4-Trimethyl benzene (mg/L)	1,3,5-Trimethyl benzene (mg/L)	1,2-Dichloro ethane (EDC) (mg/L)	1,2-Dibro methane (EDB) [1] (mg/L)	Naphthalene (mg/L)	1-Methyl naphthalene (mg/L)	Acetone (mg/L)	2-Butanone (mg/L)	Chloro ethane (mg/L)	1,1-Dichloro ethane (mg/L)	Isopropyl benzene (mg/L)	Methylene Chloride (mg/L)	n-Butyl benzene (mg/L)	n-Propyl benzene (mg/L)	sec-Butyl benzene (mg/L)
WQCC 20 NMAC 6.2.3103 (DEC 2018)			NE	NE	**0.005**	**0.00005**	**0.03**	NE	NE	NE	NE	**0.025**	NE	**0.005**	NE	NE	NE
40 CFR 141.61 MCL			NE	NE	0.005	0.00005	NE	NE	NE	NE	NE	NE	NE	0.005	NE	NE	NE
NMED TAP WATER (JUNE 2019)			NE	NE	0.0017	0.0000747	0.00165	**0.0114**	**14.06**	**5.56**	**20.86**	0.0275	**0.447**	0.1180	NE	NE	NE
EPA RSL TAP WATER (NOVEMBER 2019)			**0.056**	**0.06**	0.0017	0.0000075	0.00017	0.0011	14	5.6	20.9	0.0028	0.45	0.011	**1**	**0.66**	**2**
WELL ID	DATE SAMPLED	METHOD															
OW-13	11/08/10	8260B	<0.001		<0.001		<0.002	<0.004				<0.001	<0.001		<0.001	<0.001	<0.001
(continued)	09/22/10	8260B	<0.001		<0.001		<0.002	<0.004				<0.001	<0.001		<0.001	<0.001	<0.001
	06/07/10	8260B	<0.001		<0.001		<0.002	<0.004				<0.001	<0.001		<0.001	<0.001	<0.001
	03/25/10	8260B	<0.001		<0.001		<0.002	<0.004				<0.001	<0.001		<0.001	<0.001	<0.001
OW-14 [2]	08/12/19	--	Recovery system installed														
	05/01/19	8260B/8011(504.1EDB)	0.014	<0.05	*<0.05**	<0.0000095	**0.024**	**0.032**	<0.5		<0.1	*<0.05**	0.014	*<0.15**	<0.15	0.032	<0.05
	02/05/19	8260B/8011(504.1EDB)	<0.05	<0.05	*<0.05**	<0.0000094	**0.027**	**0.028**	<0.5		<0.1	*<0.05**	0.018	*<0.15**	<0.15	0.037	<0.05
	11/06/18	8260B/8011(504.1EDB)	<0.05	<0.05	*<0.05**	<0.0000095	*<0.1**	*<0.2**	<0.5		<0.1	*<0.05**	<0.05	*<0.03**	<0.15	<0.05	<0.05
	09/11/18	8260B/8011/504.1EDB	<0.05	<0.05	*<0.05**	<0.0000094	0.027	**0.026**	<0.5		<0.1	*<0.05**	0.017	*<0.15**	<0.15	0.03	<0.05
	05/15/18	8260B/8011/504.1EDB	*<0.1**	*<0.1**	*<0.1**	<0.0000094	0.017	*<4.0**	<1.0		<0.2	*<0.1**	0.014	*<0.3**	<0.3	0.027	<0.1
	02/27/18	8260B/8011/504.1EDB	*<0.1**	*<0.1**	*<0.1**	<0.0000094	**0.044**	**0.059**	<1.0		<0.2	*<0.1**	0.012	*<0.3**	<0.3	0.032	<0.1
	12/11/17	8260B/8011(504.1EDB)	0.013	0.0021	*<0.01**	*<0.01**	**0.037**	**0.033**	<0.1		<0.03	<0.01	0.016	*<0.03**	0.003	0.028	0.0032
	09/06/17	8260B	0.012	0.0016	*<0.005**	*<0.005**	**0.038**	**0.038**	0.013		<0.015	<0.005	0.014	*<0.015**	0.0021	0.025	0.0027
	05/30/17	8260B	0.011	<0.05	*<0.05**	*<0.05**	0.028	**0.037**	<0.5		<0.15	*<0.05**	0.014	**0.0073**	<0.15	0.021	<0.05
	02/27/17	8260B	0.0074	<0.05	*<0.05**	*<0.05**	0.024	**0.035**	<0.5		<0.15	*<0.05**	0.0083	*<0.15**	<0.15	0.014	<0.05
	11/15/16	8260B/8011(504.1EDB)	0.0084	0.0015	0.0034		0.02	**0.03**				<0.01	0.01	*<0.03**	0.0034	0.013	0.0041
	09/01/16	8260B	0.0071	0.00082	*<0.005**		0.018	**0.034**				<0.005	0.0085	*<0.015**	0.0013	0.011	0.0022
	06/06/16	8260B	0.008	0.0017	*<0.01**		0.019	**0.033**				0.0033	0.0096	<0.003	<0.03	0.011	0.0031
	03/04/16	8260B	<0.05		*<0.05**		0.017	**0.03**				*<0.05**	<0.05	**0.011**	<0.15	<0.05	<0.05
	10/27/15	8260B	<0.02		*<0.02**		<0.04	*<0.08**				<0.02	<0.02		<0.06	<0.02	<0.02
	08/10/15	8260B	<0.01		*<0.01**		<0.02	*<0.04**				*<0.04**	<0.01		<0.03	<0.01	<0.01
	06/01/15	8260B	<0.02		*<0.02**		<0.04	*<0.08**				<0.02	<0.02		<0.06	<0.02	<0.02
	03/09/15	8260B	<0.02		*<0.02**		<0.04	*<0.08**				<0.02	<0.02		<0.06	<0.02	<0.02
	11/10/14	8260B	<0.01		*<0.01**		<0.02	**0.044**				<0.01	<0.01		<0.03	<0.01	<0.01
	09/15/14	8260B/8270C	<0.02		*<0.02**		<0.04	**0.016**				<0.02	<0.02		<0.06	<0.02	<0.02
	06/03/14	8260B	<0.02		*<0.02**		<0.04	*<0.08**				*<0.08**	<0.02		<0.06	<0.02	<0.02
	03/07/14	8260B	<0.01		*<0.01**		<0.02	*<0.04**				*<0.04**	<0.01		<0.03	<0.01	<0.01
	11/11/13	8260B	<0.005		*<0.005**		<0.01	**0.027**				<0.005	0.0066		<0.015	<0.005	<0.005
	09/04/13	8260B	<0.005		*<0.005**		<0.01	**0.024**				<0.005	0.006		<0.015	<0.005	<0.005
	06/13/13	8260B	<0.01		*<0.01**		<0.02	*<0.04**				<0.01	<0.01		<0.03	<0.01	<0.01
	03/19/13	8260B	<0.01		*<0.01**		<0.02	*<0.04**				<0.01	<0.01		<0.03	<0.01	<0.01
	11/27/12	8260B	<0.01		*<0.01**		<0.02	*<0.04**				<0.01	<0.01		<0.03	<0.01	<0.01
	08/23/12	8260B	<0.01		*<0.01**		<0.02	*<0.04**				<0.01	<0.01		<0.03	<0.01	<0.01
	06/14/12	8260B	<0.01		*<0.01**		<0.02	*<0.04**				<0.01	<0.01		<0.01	<0.01	<0.01
	03/21/12	8260B	<0.01		*<0.01**		<0.02	*<0.04**				<0.01	<0.01		<0.01	<0.01	<0.01
	12/13/11	8260B	<0.005		*<0.005**		<0.01	**0.021**				<0.005	0.0071		<0.005	<0.005	<0.005
	10/24/11	8260B	<0.005		*<0.005**		<0.01	**0.022**				<0.005	0.0082		<0.005	<0.005	<0.005

8.13.4 OW-13, OW-14, OW-29, OW-30

Volatile Organic Compounds Analytical Result Summary

			PARAMETERS														
STANDARDS			1,2,4-Trimethyl benzene (mg/L)	1,3,5-Trimethyl benzene (mg/L)	1,2-Dichloro ethane (EDC) (mg/L)	1,2-Dibro methane (EDB) [1] (mg/L)	Naphthalene (mg/L)	1-Methyl naphthalene (mg/L)	Acetone (mg/L)	2-Butanone (mg/L)	Chloro ethane (mg/L)	1,1-Dichloro ethane (mg/L)	Isopropyl benzene (mg/L)	Methylene Chloride (mg/L)	n-Butyl benzene (mg/L)	n-Propyl benzene (mg/L)	sec-Butyl benzene (mg/L)
WQCC 20 NMAC 6.2.3103 (DEC 2018)			NE	NE	**0.005**	**0.00005**	**0.03**	NE	NE	NE	NE	**0.025**	NE	**0.005**	NE	NE	NE
40 CFR 141.61 MCL			NE	NE	0.005	0.00005	NE	NE	NE	NE	NE	NE	NE	0.005	NE	NE	NE
NMED TAP WATER (JUNE 2019)			NE	NE	0.0017	0.0000747	0.00165	**0.0114**	**14.06**	**5.56**	**20.86**	0.0275	**0.447**	0.1180	NE	NE	NE
EPA RSL TAP WATER (NOVEMBER 2019)			**0.056**	**0.06**	0.0017	0.0000075	0.00017	0.0011	14	5.6	20.9	0.0028	0.45	0.011	**1**	**0.66**	**2**
WELL ID	**DATE SAMPLED**	**METHOD**															
OW-14 [2]	06/20/11	8260B	0.0011		0.0017		0.0021	**0.02**				0.0012	0.0068		<0.001	0.0021	0.0024
(continued)	02/24/11	8260B	0.0013		0.0016		<0.002	**0.019**				<0.001	0.0048		<0.001	0.0013	0.0027
	11/08/10	8260B	0.0012		0.0015		<0.002	**0.022**				<0.001	0.0037		<0.001	<0.001	0.0027
	09/22/10	8260B	<0.001		0.0022		<0.002	**0.022**				<0.001	0.0029		<0.001	<0.001	0.0028
	06/07/10	8260B	0.0011		0.0015		<0.002	**0.02**				<0.001	0.0026		<0.001	<0.001	0.0024
	03/24/10	8260B	<0.005		*<0.005**		<0.01	*<0.02**				<0.005	<0.005		<0.005	<0.005	<0.005
OW-29	11/14/19	8260B/8011(504.1EDB)	<0.005	<0.005	0.0021	<0.0000093	<0.01	*<0.02**	<0.5		<0.1	<0.005	<0.005	*<0.15**	<0.015	<0.005	<0.005
	08/12/19	8260B/8011(504.1EDB)	<0.005	<0.005	*<0.005**	<0.0000094	<0.01	*<0.02**	<0.02		<0.01	<0.005	<0.005	*<0.015**	<0.015	<0.005	<0.005
	05/01/19	8260B/8011(504.1EDB)	<0.005	<0.005	*<0.005**	<0.0000096	<0.01	*<0.02**	<0.05		<0.01	<0.005	<0.005	*<0.015**	<0.015	<0.005	<0.005
	02/05/19	8260B/8011(504.1EDB)	<0.005	<0.005	*<0.005**	<0.0000096	<0.01	*<0.02**	<0.05		<0.01	<0.005	<0.005	*<0.015**	<0.015	<0.005	<0.005
	11/06/18	8260B/8011(504.1EDB)	<0.05	<0.05	*<0.05**	<0.0000094	*<0.1**	*<0.2**	<0.5		<0.1	*<0.05**	<0.05	*<0.15**	<0.15	<0.05	<0.05
	09/11/18	8260B/8011/504.1/EDB	<0.005	<0.005	*<0.005**	<0.0000094	<0.01	*<0.02**	0.011		<0.01	<0.005	<0.005	*<0.015**	<0.015	<0.005	<0.005
	05/16/18	8260B/8011(504.1EDB)	<0.002	<0.002	<0.002	<0.0000095	<0.004	<0.008	<0.02		<0.004	<0.002	<0.002	*<0.006**	<0.006	<0.002	<0.002
	02/27/18	8260B/8011(504.1EDB)	<0.005	<0.005	*<0.005**	<0.0000095	<0.01	*<0.02**	<0.05		<0.01	<0.005	<0.005	*<0.015**	<0.015	<0.005	<0.005
	12/11/17	8260B/8011(504.1EDB)	<0.005	<0.005	*<0.005**	*<0.005**	<0.01	*<0.02**	0.014		<0.015	<0.005	<0.005	*<0.015**	<0.015	<0.005	<0.005
	09/06/17	8260B	<0.01	<0.01	*<0.01**	*<0.01**	<0.02	*<0.04**	<0.1		<0.03	<0.01	<0.01	*<0.03**	<0.03	<0.01	<0.01
	05/30/17	8260B	<0.01	<0.01	*<0.01**	*<0.01**	<0.02	*<0.04**	0.014		<0.03	<0.01	<0.01	0.0016	<0.03	<0.01	<0.01
	02/27/17	8260B	<0.01	<0.01	*<0.01**	*<0.01**	<0.02	*<0.04**	<0.1		<0.03	<0.01	<0.01	*<0.03**	<0.03	<0.01	<0.01
	11/15/16	8260B/8011(504.1EDB)	<0.005		0.0018		<0.01	*<0.02**				<0.005	<0.005	*<0.015**	<0.015	<0.005	<0.005
	08/31/16	8260B	<0.001		0.00065		<0.002	0.00026				<0.001	<0.001	<0.003	<0.003	<0.001	<0.001
	06/06/16	8260B	<0.005		*<0.005**		<0.01	<0.001				<0.005	<0.005	*<0.015**	<0.015	<0.005	<0.005
	03/04/16	8260B	<0.005		0.00016		<0.01	*<0.02**				<0.005	<0.005	0.0011	<0.015	<0.005	<0.005
	10/27/15	8260B	<0.005		*<0.005**		<0.01	*<0.02**				<0.005	<0.005		<0.015	<0.005	<0.005
	08/11/15	8260B	<0.005		*<0.005**		<0.01	*<0.02**				<0.005	<0.005		<0.015	<0.005	<0.005
	06/01/15	8260B	<0.005		*<0.005**		<0.01	*<0.02**				<0.005	<0.005		<0.015	<0.005	<0.005
	03/09/15	8260B	<0.001		<0.001		<0.002	<0.004				<0.004	<0.001		<0.003	<0.001	<0.001
	11/11/14	8260B	<0.005		*<0.005**		<0.01	*<0.02**				<0.005	<0.005		<0.015	<0.005	<0.005
	09/15/14	8260B	<0.005		*<0.005**		<0.01	*<0.02**				<0.005	<0.005		<0.015	<0.005	<0.005
	06/02/14	8260B	<0.001		<0.001		<0.002	<0.004				<0.001	<0.001		<0.003	<0.001	<0.001
	03/07/14	8260B	<0.001		<0.001		<0.002	<0.004				<0.001	<0.001		<0.003	<0.001	<0.001
	11/11/13	8260B	<0.002		<0.002		<0.004	<0.008				<0.002	<0.002		<0.006	<0.002	<0.002
	09/04/13	8260B	<0.001		<0.001		<0.002	<0.004				<0.001	<0.001		<0.003	<0.001	<0.001
	06/13/13	8260B	<0.001		<0.001		<0.002	<0.004				<0.004	<0.001		<0.003	<0.001	<0.001
	03/19/13	8260B	<0.001		<0.001		<0.002	<0.004				<0.001	<0.001		<0.003	<0.001	<0.001
	11/27/12	8260B	<0.001		<0.001		<0.002	<0.004				<0.001	<0.001		<0.003	<0.001	<0.001
	08/23/12	8260B	<0.001		<0.001		<0.002	<0.004				<0.001	<0.001		<0.003	<0.001	<0.001

8.13.4 OW-13, OW-14, OW-29, OW-30
Volatile Organic Compounds Analytical Result Summary

			PARAMETERS														
STANDARDS			1,2,4-Trimethyl benzene (mg/L)	1,3,5-Trimethyl benzene (mg/L)	1,2-Dichloro ethane (EDC) (mg/L)	1,2-Dibro methane (EDB) [1] (mg/L)	Naphthalene (mg/L)	1-Methyl naphthalene (mg/L)	Acetone (mg/L)	2-Butanone (mg/L)	Chloro ethane (mg/L)	1,1-Dichloro ethane (mg/L)	Isopropyl benzene (mg/L)	Methylene Chloride (mg/L)	n-Butyl benzene (mg/L)	n-Propyl benzene (mg/L)	sec-Butyl benzene (mg/L)
WQCC 20 NMAC 6.2.3103 (DEC 2018)			NE	NE	**0.005**	**0.00005**	**0.03**	NE	NE	NE	NE	**0.025**	NE	**0.005**	NE	NE	NE
40 CFR 141.61 MCL			NE	NE	0.005	0.00005	NE	NE	NE	NE	NE	NE	NE	0.005	NE	NE	NE
NMED TAP WATER (JUNE 2019)			NE	NE	0.0017	0.0000747	0.00165	**0.0114**	**14.06**	**5.56**	**20.86**	0.0275	**0.447**	0.1180	NE	NE	NE
EPA RSL TAP WATER (NOVEMBER 2019)			**0.056**	**0.06**	0.0017	0.0000075	0.00017	0.0011	14	5.6	20.9	0.0028	0.45	0.011	**1**	**0.66**	**2**
WELL ID	DATE SAMPLED	METHOD															
OW-29	06/13/12	8260B	<0.001		<0.001		<0.002	<0.004				<0.001	<0.001		<0.001	<0.001	<0.001
(continued)	03/21/12	8260B	<0.001		<0.001		<0.002	<0.004				<0.001	<0.001		<0.001	<0.001	<0.001
	12/14/11	8260B	<0.001		<0.001		<0.002	<0.004				<0.001	<0.001		<0.001	<0.001	<0.001
	10/24/11	8260B	<0.001		<0.001		<0.002	<0.004				<0.001	<0.001		<0.001	<0.001	<0.001
	06/20/11	8260B	<0.001		<0.001		<0.002	<0.004				<0.001	<0.001		<0.001	<0.001	<0.001
	02/24/11	8260B	<0.001		<0.001		<0.002	<0.004				<0.001	<0.001		<0.001	<0.001	<0.001
	11/09/10	8260B	<0.001		<0.001		<0.002	<0.004				<0.001	<0.001		<0.001	<0.001	<0.001
	09/22/10	8260B	<0.001		<0.001		<0.002	<0.004				<0.001	<0.001		<0.001	<0.001	<0.001
	06/07/10	8260B	<0.001		<0.001		<0.002	<0.004				<0.001	<0.001		<0.001	<0.001	<0.001
	03/25/10	8260B	<0.001		<0.001		<0.002	<0.004				<0.001	<0.001		<0.001	<0.001	<0.001
OW-30 [2]	08/12/19	--	Recovery system installed														
	06/05/19	8206B/8011/504.1EDB	<0.005	<0.005	*<0.005**	<0.0000093	<0.01	*<0.02**	<0.02		<0.015	<0.005	<0.005	*<0.015**	<0.015	<0.005	<0.005
	03/27/19	8206B/8011/504.1EDB	0.0012	<0.005	*<0.005**	<0.0000095	<0.01	*<0.02**	<0.05		<0.01	<0.005	<0.005	*<0.015**	<0.015	<0.005	<0.005
	12/03/18	8206B/8011/504.1EDB	<0.005	<0.005	*<0.005**	<0.0000096	<0.01	*<0.02**	<0.05		<0.01	<0.005	<0.005	*<0.015**	<0.015	<0.005	<0.005
	09/19/18	8206B/8011/504.1EDB	<0.005	<0.005	*<0.005**	<0.0000094	<0.01	*<0.02**	<0.02		<0.05	<0.005	<0.005	*<0.015**	<0.015	<0.005	0.0012
	05/16/18	8260B/8011/504.1EDB	0.00029	<0.001	<0.001	<0.0000094	<0.002	<0.004	<0.01		<0.002	<0.001	0.00016	<0.003	<0.003	<0.001	0.0014
	02/28/18	8260B/8011/504.1EDB	<0.005	<0.005	*<0.005**	0.0000094	<0.01	*<0.02**	0.0049		<0.01	<0.005	<0.005	*<0.015**	<0.015	<0.005	0.0011
	12/12/17	8260B	<0.005	<0.005	*<0.005**	*<0.005**	<0.01	*<0.02**	0.011		<0.015	<0.005	<0.005	*<0.015**	<0.015	<0.005	0.0011
	09/06/17	8260B	0.00034	<0.001	<0.001	*<0.001**	<0.002	<0.004	0.0015		<0.003	<0.001	0.00009	<0.003	<0.003	<0.001	0.00068
	05/31/17	8260B	<0.01	<0.01	*<0.01**	*<0.01**	<0.02	*<0.04**	<0.1		<0.03	<0.01	<0.01	*<0.03**	<0.03	<0.01	<0.01
	02/27/17	8260B	<0.01	<0.01	*<0.01**	*<0.01**	<0.02	*<0.04**	<0.1		<0.03	<0.01	<0.01	*<0.03**	<0.03	<0.01	<0.01
	11/14/16	8260B	<0.005		0.0016		<0.01	*<0.02**	<0.05		<0.01	<0.005	<0.005	*<0.015**	<0.015	<0.005	<0.005
	08/31/16	8260B	0.00018		0.00032		<0.002	<0.004	<0.01		<0.002	<0.001	<0.001	<0.003	<0.003	<0.001	0.00037
	06/06/16	8260B	<0.005		*<0.005**		<0.01	*<0.02**	<0.01		<0.01	<0.005	<0.005	*<0.005**	<0.015	<0.005	0.00064
	03/08/16	8260B	<0.002		0.005		<0.004	<0.008	0.003		<0.004	<0.002	<0.002	0.00063	<0.006	<0.002	<0.002
	10/27/15	8260B	<0.005		*<0.005**		<0.01	*<0.02**			<0.01	<0.005	<0.005		<0.015	<0.005	<0.005
	08/10/15	8260B	<0.001		<0.001		<0.002	<0.004			<0.002	<0.004	<0.001		<0.003	<0.001	<0.001
	06/02/15	8260B	<0.005		*<0.005**		<0.01	*<0.02**			<0.01	<0.005	<0.005		<0.015	<0.005	<0.005
	03/09/15	8260B	<0.001		<0.001		<0.002	<0.004			<0.002	<0.004	<0.001		<0.003	<0.001	<0.001
	11/11/14	8260B	<0.005		*<0.005**		<0.01	*<0.02**			<0.01	<0.005	<0.005		<0.015	<0.005	<0.005
	09/17/14	8260B	<0.001		<0.001		<0.002	<0.004			<0.002	<0.004	<0.001		<0.003	<0.001	<0.001
	06/02/14	8260B	<0.001		<0.001		<0.002	<0.004			<0.002	<0.001	<0.001		<0.003	<0.001	<0.001
	03/07/14	8260B	<0.001		<0.001		<0.002	<0.004			<0.002	<0.001	<0.001		<0.003	<0.001	<0.001
	11/11/13	8260B	<0.001		<0.001		<0.002	<0.004			0.0047	<0.001	<0.001		<0.003	<0.001	<0.001
	09/04/13	8260B	<0.001		<0.001		<0.002	<0.004				<0.001	<0.001		<0.003	<0.001	<0.001
	06/17/13	8260B	<0.001		<0.001		<0.002	<0.004				<0.001	<0.001		<0.003	<0.001	<0.001
	03/19/13	8260B	<0.005		*<0.005**		<0.01	*<0.02**				<0.02	<0.005		<0.015	<0.005	<0.005

8.13.4 OW-13, OW-14, OW-29, OW-30
Volatile Organic Compounds Analytical Result Summary

STANDARDS			PARAMETERS													
			1,2,4-Trimethyl benzene (mg/L)	1,3,5-Trimethyl benzene (mg/L)	1,2-Dichloro ethane (EDC) (mg/L)	1,2-Dibro methane (EDB) [1] (mg/L)	Naphthalene (mg/L)	1-Methyl naphthalene (mg/L)	Acetone (mg/L)	2-Butanone (mg/L)	Chloro ethane (mg/L)	1,1-Dichloro ethane (mg/L)	Isopropyl benzene (mg/L)	Methylene Chloride (mg/L)	n-Butyl benzene (mg/L)	n-Propyl benzene (mg/L)	sec-Butyl benzene (mg/L)
WQCC 20 NMAC 6.2.3103 (DEC 2018)			NE	NE	**0.005**	**0.00005**	**0.03**	NE	NE	NE	NE	**0.025**	NE	**0.005**	NE	NE	NE
40 CFR 141.61 MCL			NE	NE	0.005	0.00005	NE	NE	NE	NE	NE	NE	NE	0.005	NE	NE	NE
NMED TAP WATER (JUNE 2019)			NE	NE	0.0017	0.0000747	0.00165	**0.0114**	**14.06**	**5.56**	**20.86**	0.0275	**0.447**	0.1180	NE	NE	NE
EPA RSL TAP WATER (NOVEMBER 2019)			**0.056**	**0.06**	0.0017	0.0000075	0.00017	0.0011	14	5.6	20.9	0.0028	0.45	0.011	**1**	**0.66**	**2**
WELL ID	**DATE SAMPLED**	**METHOD**															
OW-30 [2]	11/27/12	8260B	<0.001		<0.001		<0.002	<0.004				<0.001	<0.001		<0.003	<0.001	<0.001
(continued)	08/23/12	8260B	<0.001		<0.001		<0.002	<0.004				<0.001	<0.001		<0.003	<0.001	<0.001
	06/14/12	8260B	<0.001		<0.001		<0.002	<0.004				<0.001	<0.001		<0.001	<0.001	<0.001
	03/21/12	8260B	<0.001		<0.001		<0.002	<0.004				<0.001	<0.001		<0.001	<0.001	<0.001
	12/15/11	8260B	<0.001		<0.001		<0.002	<0.004				<0.001	<0.001		<0.001	<0.001	<0.001
	10/24/11	8260B	<0.001		<0.001		<0.002	<0.004				<0.001	<0.001		<0.001	<0.001	<0.001
	06/20/11	8260B	<0.001		<0.001		<0.002	<0.004				<0.001	<0.001		<0.001	<0.001	<0.001
	02/24/11	8260B	<0.001		<0.001		<0.002	<0.004				<0.001	<0.001		<0.001	<0.001	<0.001
	11/08/10	8260B	<0.001		<0.001		<0.002	<0.004				<0.001	<0.001		<0.001	<0.001	<0.001
	09/27/10	8260B	<0.001		<0.001		<0.002	<0.004				<0.001	<0.001		<0.001	<0.001	<0.001
	06/04/10	8260B	<0.001		<0.001		<0.002	<0.004				<0.001	<0.001		<0.001	<0.001	<0.001
	03/24/10	8260B	<0.001		<0.001		<0.002	<0.004				<0.001	<0.001		<0.001	<0.001	<0.001

DEFINITIONS

NA = Not analyzed; NE = Not established

Bold and highlighted values represent values above the applicable standards

STANDARDS

WQCC 20 NMAC 6.2.3103 - Standards for Ground Water of 10,000 mg/l TDS Concentration or Less.

a) Human Health Standards; b) Other Standards for Domestic Water

40 CFR 141.61 Maximum Contaminant Levels for Organic Contaminants

NMED Risk Assessment Guidance for Investigations and Remediations Table A-1

EPA Regional Screening Level (RSL) Summary Table

NOTES

Wells marked in red were not sampled because recovery appartus was present

Items notes with a * and italics have a detection limit greater than or equal to the applicable standard.

1) New requirement per directive from NMED "Approval with Modifications", dated May 18, 2016.

2) OW-14 & OW-30 - Dedicated recovery system installed on wells - did not sample.

8.14 STP1-NW, OW-59, OW-60, OW-62
BTEX and MTBE Analytical Result Summary

STANDARDS			PARAMETERS				
			Benzene (mg/L)	Toluene (mg/L)	Ethyl-benzene (mg/L)	Total Xylenes (mg/L)	MTBE (mg/L)
WQCC 20 NMAC 6.2.3103 (DEC 2018)			**0.005**	**1**	**0.7**	**0.62**	**0.1**
40 CFR 141.61 MCL			0.005	1	0.7	10	NE
NMED TAP WATER (JUNE 2019)			0.00455	1.09	0.0149	0.193	0.143
EPA RSL TAP WATER (NOVEMBER 2019)			0.0046	1.1	0.0015	0.19	0.14
WELL ID	**DATE SAMPLED**	**METHOD**					
STP1-NW	10/22/19	8260B	<0.001	<0.001	<0.001	<0.0015	<0.001
	08/21/19	8260B	<0.001	<0.001	<0.001	<0.0015	<0.001
	05/08/19	8260B	<0.001	<0.001	<0.001	<0.0015	<0.001
	02/13/19	8260B	<0.001	<0.001	<0.001	<0.0015	<0.001
	11/19/18	8260B	<0.001	<0.001	<0.001	<0.0015	<0.001
	09/06/18	8260B	<0.001	<0.001	<0.001	0.00054	<0.001
	04/30/18	8260B	<0.001	0.00032	<0.001	0.00054	<0.001
	02/09/18	8260B	0.00052	0.0021	0.00049	0.0024	<0.001
	12/04/17	8260B	<0.001	<0.001	<0.001	<0.0015	<0.001
	09/05/17	8260B	<0.001	<0.001	<0.001	<0.0015	0.00057
	06/02/17	8260B	<0.001	<0.001	<0.001	<0.0015	0.00043
	02/21/17	8260B	<0.001	<0.001	<0.001	<0.0015	0.00063
	11/14/16	8260B	<0.001	<0.001	<0.001	<0.0015	0.00036
	09/09/16	8260B	<0.001	<0.001	<0.001	<0.0015	0.0003
	06/07/16	8260B	<0.001	<0.001	<0.001	<0.0015	0.0006
	03/02/16	8260B	<0.001	<0.001	<0.001	<0.0015	**0.47**
	10/29/15	8260B	<0.001	<0.001	<0.001	<0.0015	<0.001
	08/11/15	8260B	<0.001	<0.001	<0.001	<0.0015	<0.001
	06/02/15	8260B	<0.001	<0.001	<0.001	<0.0015	<0.001
	03/10/15	8260B	<0.001	<0.001	<0.001	<0.0015	<0.001
	11/18/14	8260B	<0.001	<0.001	<0.001	<0.0015	<0.001
	09/17/14	8260B	<0.001	<0.001	<0.001	<0.0015	<0.001
	06/16/14	8260B	<0.001	<0.001	<0.001	<0.0015	<0.001
OW-59	10/15/19	8260B	<0.001	<0.001	<0.001	<0.0015	0.0092
	08/21/19	8260B	<0.001	<0.001	<0.001	<0.0015	0.01
	05/02/19	8260B	<0.001	<0.001	<0.001	<0.0015	0.01
	02/13/19	8260B	<0.001	<0.001	<0.001	<0.0015	0.01
	11/07/18	8260B	<0.002	<0.002	<0.002	<0.003	0.0077
	08/28/18	8260B	<0.001	<0.001	<0.001	<0.0015	0.01
	05/08/18	8260B	<0.001	<0.001	<0.001	<0.0015	0.0092
	02/22/18	8260B	<0.001	<0.001	<0.001	<0.0015	0.0092
	12/06/17	8260B	<0.001	<0.001	<0.001	<0.0015	0.0094

8.14 STP1-NW, OW-59, OW-60, OW-62
BTEX and MTBE Analytical Result Summary

STANDARDS			PARAMETERS				
			Benzene (mg/L)	Toluene (mg/L)	Ethyl-benzene (mg/L)	Total Xylenes (mg/L)	MTBE (mg/L)
WQCC 20 NMAC 6.2.3103 (DEC 2018)			**0.005**	**1**	**0.7**	**0.62**	**0.1**
40 CFR 141.61 MCL			0.005	1	0.7	10	NE
NMED TAP WATER (JUNE 2019)			0.00455	1.09	0.0149	0.193	0.143
EPA RSL TAP WATER (NOVEMBER 2019)			0.0046	1.1	0.0015	0.19	0.14
WELL ID	**DATE SAMPLED**	**METHOD**					
OW-60	10/15/19	8260B	<0.001	<0.001	<0.001	<0.0015	0.00075
	08/21/19	8260B	0.00029	<0.001	<0.001	<0.0015	0.00074
	05/02/19	8260B	<0.001	<0.001	<0.001	<0.0015	0.00058
	02/13/19	8260B	<0.001	<0.001	<0.001	<0.0015	0.00046
	11/07/18	8260B	<0.001	<0.001	<0.001	<0.0015	0.00071
	08/28/18	8260B	<0.001	<0.001	<0.001	<0.0015	0.00054
	05/08/18	8260B	<0.001	<0.001	<0.001	<0.0015	0.00042
	02/22/18	8260B	<0.001	<0.001	<0.001	<0.0015	0.00046
	12/06/17	8260B	<0.001	<0.001	<0.001	<0.0015	0.00028
OW-62	11/18/19	--			SPH		
	08/20/19	--			SPH		
	05/15/19	--			SPH		
	02/19/19	--			SPH		
OW-62[1]	11/29/18	8260B	**0.92**	0.013	0.0019	0.009	<0.005
	08/22/18	8260B	**2.7**	0.0095	<0.005	0.038	<0.005
	04/29/18	8260B	**3.9**	0.039	0.0062	0.12	0.0012

DEFINITIONS

NA = Not analyzed; NE = Not established.

Bold and highlighted values represent values above the applicable standards

STANDARDS

WQCC 20 NMAC 6.2.3103 - Standards for Ground Water of 10,000 mg/l TDS Concentration or Less.

a) Human Health Standards; b) Other Standards for Domestic Water

40 CFR 141.61 Maximum Contaminant Levels for Organic Contaminants

NMED Risk Assessment Guidance for Investigations and Remediations Table A-1

EPA Regional Screening Level (RSL) Summary Table

NOTES

Wells marked in red were not sampled because of SPH

1 - OW-62 not sampled during 2019 - SPH present.

8.14.1 STP1-NW, OW-59, OW-60, OW-62
General Chemistry and DRO/GRO/MRO Analytical Result Summary

			PARAMETERS							
STANDARDS			Fluoride (mg/L)	Chloride (mg/L)	Nitrite (mg/L)	Nitrate (mg/L)	Sulfate (mg/L)	DRO (mg/L)	GRO (mg/L)	MRO (mg/L)
WQCC 20 NMAC 6.2.3103 (DEC 2018)			**1.6**	**250.0**	**1**	**10**	**600.0**	NE	NE	NE
40 CFR 141.62 MCL			4.0	NE	1	10	NE	NE	NE	NE
NMED TAP WATER (JUNE 2019)			1.18	NE	1.97	31.60	NE	NE	NE	NE
EPA RSL TAP WATER (NOVEMBER 2019)			0.8	NE	2	32	NE	NE	NE	NE
NMED SSG (JUNE 2019)			NE	NE	NE	NE	NE	**0.0167**	**0.0101**	**0.0858**
WELL ID	DATE SAMPLED	METHOD								
STP1-NW	10/22/19	300.0/8015D	<0.5	**2300**	*<2.0**	**27**	170	*<0.4**	*<0.05**	*<2.5**
	08/21/19	300.0/8015D	<0.5	**2500**	*<2.0**	**29**	200	*<1.0**	*<0.05**	*<5.0**
	05/08/19	300.0/8015D	<0.5	**2300**	*<2.0**	**27**	190	*<1.0**	*<0.05**	*<5.0**
	02/13/19	300.0/8015D	<0.5	**2300**	*<2.0**	**27**	180	*<1.0**	*<0.05**	*<5.0**
	11/19/18	300.0/8015D	<0.5	**2100**	*<2.0**	**26**	160	*<1.0**	*<0.05**	*<5.0**
	09/06/18	300.0/8015D	0.47	**1900**	**23**	**23**	170	**0.99**	*<0.05**	*<5.0**
	04/30/18	300.0/8015D	<0.5	**2100**	**24**	**24**	150	*<1.0**	*<0.05**	*<5.0**
	02/09/18	300.0/8015D	<0.5	**2100**	**25**	**25**	150	*<1.0**	**0.81**	*<5.0**
	12/04/17	300.0/8015D	<0.5	**2200**	**26**	**26**	150	*<1.0**	**0.025**	*<5.0**
	09/05/17	300.0/8015D	<0.5	**2300**	**25**	**25**	160	*<1.0**	*<0.05**	*<5.0**
	06/02/17	300.0/8015D	<0.1	**2100**	**24**	**24**	140	*<1.0**	*<0.05**	*<5.0**
	02/21/17	300.0/8015D	<0.5	**2000**	**24**	**24**	140	*<1.0**	*<0.05**	*<5.0**
	11/14/16	300.0/8015D	<0.5	**2000**	*<2.0**	**24**	140	*<1.0**	*<0.05**	*<5.0**
	09/09/16	300.0/8015D	<0.5	**1800**	**26**	**26**	150	*<1.0**	*<0.05**	*<5.0**
	06/07/16	300.0/8015D	0.058	**2400**	**20**	**20**	150	*<1.0**	*<0.05**	*<5.0**
	03/02/16	300.0/8015D	NA	NA	NA	NA	NA	*<1.0**	*<0.05**	*<5.0**
	10/29/15	300.0/8015D	0.26	**2100**	**21**	**21**	130	*<1.0**	*<0.05**	*<5.0**
	08/11/15	300.0/8015D	NA	NA	NA	NA	NA	*<1.0**	*<0.05**	*<5.0**
	06/02/15	300.0/8015D	<0.5	**2100**	**25**	**25**	130	*<1.0**	*<0.05**	*<5.0**
	03/10/15	300.0/8015D	<0.1	**2400**	**22**	**22**	150	*<1.0**	*<0.05**	*<5.0**
	11/18/14	300.0/8015D	0.29	**1800**	*<2.0**	**18**	120	*<1.0**	*<0.05**	*<5.0**
	09/17/14	300.0/8015D	0.26	**1800**	*<2.0**	**18**	120	*<1.0**	*<0.05**	*<5.0**
	06/16/14	300.0/8015D	0.85	**1000**	**15**	**15**	160	*<1.0**	*<0.05**	*<5.0**

8.14.1 STP1-NW, OW-59, OW-60, OW-62
General Chemistry and DRO/GRO/MRO Analytical Result Summary

STANDARDS			PARAMETERS							
			Fluoride (mg/L)	Chloride (mg/L)	Nitrite (mg/L)	Nitrate (mg/L)	Sulfate (mg/L)	DRO (mg/L)	GRO (mg/L)	MRO (mg/L)
WQCC 20 NMAC 6.2.3103 (DEC 2018)			**1.6**	**250.0**	**1**	**10**	**600.0**	NE	NE	NE
40 CFR 141.62 MCL			4.0	NE	1	10	NE	NE	NE	NE
NMED TAP WATER (JUNE 2019)			1.18	NE	1.97	31.60	NE	NE	NE	NE
EPA RSL TAP WATER (NOVEMBER 2019)			0.8	NE	2	32	NE	NE	NE	NE
NMED SSG (JUNE 2019)			NE	NE	NE	NE	NE	**0.0167**	**0.0101**	**0.0858**
WELL ID	**DATE SAMPLED**	**METHOD**								
OW-59	10/15/19	300.0/8015D	<0.5	**2000**	*<2.0**	<2.0	**2400**	**0.58**	**2.3**	*<5.0**
	08/21/19	300.0/8015D	<0.5	**2100**	*<2.0**	<0.5	**2500**	**0.38**	**0.35**	*<5.0**
	05/02/19	300.0/8015D	<0.5	**2100**	*<2.0**	<2.0	**2700**	**0.61**	**2.2**	*<5.0**
	02/13/19	300.0/8015D	<0.5	**2000**	*<2.0**	<.5	**2600**	**0.44**	**0.43**	*<5.0**
	11/07/18	300.0/8015D	<0.5	**2100**	*<2.0**	<0.5	**2700**	*<1.0**	**0.23**	*<5.0**
	08/28/18	300.0/8015D	<0.5	**2100**	*<2.0**	<2.0	**2600**	*<1.0**	**0.064**	*<5.0**
	05/08/18	300.0/8015D	<0.5	**1800**	*<2.0**	<0.5	**2400**	*<1.0**	**2.8**	*<5.0**
	02/22/18	300.0/8015D	<0.5	**1900**	*<2.0**	<0.5	**2700**	*<1.0**	**0.13**	*<5.0**
	12/06/17	300.0/8015D	<0.5	**1700**	*<2.0**	<2.0	**2600**	**0.55**	**3.1**	*<5.0**
OW-60	10/15/19	300.0/8015D	<0.5	**1600**	**17**	**17**	**600**	*<1.0**	*<0.05**	*<5.0**
	08/21/19	300.0/8015D	0.21	**1800**	**1.8**	**17**	**730**	*<1.0**	*<0.05**	*<5.0**
	05/02/19	300.0/8015D	0.4	**1800**	**15**	**15**	**640**	*<1.0**	*<0.05**	*<5.0**
	02/13/19	300.0/8015D	0.41	**1700**	*<2.0**	**16**	**740**	*<1.0**	*<0.05**	*<5.0**
	11/07/18	300.0/8015D	<0.5	**1500**	<0.5	**20**	**740**	*<1.0**	*<0.05**	*<5.0**
	08/28/18	300.0/8015D	<0.5	**1800**	**18**	**18**	**760**	*<1.0**	*<0.05**	*<5.0**
	05/08/18	300.0/8015D	<0.5	**1700**	<0.5	**19**	**730**	*<1.0**	*<0.05**	*<5.0**
	02/22/18	300.0/8015D	0.64	**1700**	0.37	<2.5	**750**	*<1.0**	*<0.05**	*<5.0**
	12/06/17	300.0/8015D	1.1	**1700**	**14**	**14**	**780**	*<1.0**	**0.031**	*<5.0**
OW-62[1]	11/18/19	--				SPH				
	08/20/19	--				SPH				
	05/15/19	--				SPH				
	02/19/19	--				SPH				
	11/29/18	300.0/8015D	<0.5	96	<0.5	<0.5	<2.5	**6.1**	**26**	*<5.0**
	08/22/18	300.0/8015D	0.39	0.88	<0.5	<0.5	<2.5	**5.9**	**35**	*<5.0**
	04/29/18	300.0/8015D	<0.5	94	*<1.0**	<1.0	<2.5	**5.6**	**29**	*<5.0**

DEFINITIONS

NA = Not analyzed; NE = Not established.

Bold and highlighted values represent values above the applicable standards

STANDARDS

WQCC 20 NMAC 6.2.3103 - Standards for Ground Water of 10,000 mg/l TDS Concentration or Less.

a) Human Health Standards; b) Other Standards for Domestic Water

40 CFR 141.62 Maximum Contaminant Levels for Inorganic Contaminants

NMED Risk Assessment Guidance for Investigations and Remediations Table A-1

EPA Regional Screening Level (RSL) Summary Table

NMED Soil Screening Guidance Volume 1, Table 6-4 (groundwater)

NOTES

Wells marked in red were not sampled because of SPH

Items notes with a * and italics have a detection limit greater than or equal to the applicable standard.

Items highlighted were analyzed by nitrogen, nitrate & nitrite and the result is reported for both.

1 - OW-62 not sampled during 2019 - SPH present.

8.14.2 STP1-NW, OW-59, OW-60, OW-62
Total Metals Analytical Result Summary

STANDARDS			PARAMETERS												
			Arsenic (mg/L)	Barium (mg/L)	Cadmium (mg/L)	Chromium (mg/L)	Copper (mg/L)	Iron (mg/L)	Lead (mg/L)	Manganese (mg/L)	Selenium (mg/L)	Silver (mg/L)	Mercury (ug/L)	Uranium (mg/L)	Zinc (mg/L)
WQCC 20 NMAC 6.2.3103 (DEC 2018)			**0.01**	**2**	**0.005**	**0.05**	**1.0**	**1.0**	**0.015**	**0.2**	**0.05**	**0.05**	**2**	**0.03**	**10.0**
40 CFR 141.62 MCL			0.01	2.0	0.005	0.1	1.3	NE	0.015	NE	0.05	NE	2	0.03	NE
NMED TAP WATER (JUNE 2019)			0.000855	3.28	0.00624	0.0057	0.7898	13.8	NE	2.02	0.0987	0.0812	0.626	0.0592	5.96
EPA RSL TAP WATER (NOVEMBER 2019)			0.000052	3.8	0.00092	22	0.8	14	0.015	0.43	0.1	0.094	0.63	0.004	6
WELL ID	**DATE SAMPLED**	**METHOD**													
STP1-NW	10/22/19	200.7/200.8	0.0033	0.13	<0.002	0.0019	0.0047	**2.1**	0.0019	0.043	0.0057	<0.005	<0.2	NA	0.039
	08/21/19	200.7/200.8	0.0021	0.14	<0.002	<0.006	<0.006	0.28	<0.0025	0.0074	0.0039	0.0023	<0.2	**0.031**	0.0062
	05/08/19	200.7/200.8	0.0022	0.13	<0.002	<0.006	<0.006	0.57	0.00049	0.015	0.0053	0.0024	<0.2	**0.033**	0.0088
	02/13/19	200.7/200.8	0.0027	0.13	<0.002	<0.006	<0.006	0.25	0.00031	0.0077	0.0051	0.0026	0.11	**0.031**	0.0064
	11/19/18	200.7/200.8	0.003	0.11	<0.002	<0.006	<0.006	**1.1**	0.00083	0.021	0.0051	0.003	<0.2	**0.032**	0.02
	09/06/18	200.7/200.8	0.0033	0.091	<0.002	0.0018	0.0072	0.86	0.00086	0.027	0.0066	0.0016	0.17	**0.045**	0.016
	04/30/18	200.7/200.8	0.0035	0.11	<0.002	0.003	<0.006	0.51	<0.0025	0.0087	0.0063	0.0018	<0.2	0.029	0.0084
	02/09/18	200.7/200.8	*<0.01**	0.15	<0.002	<0.006	<0.006	**2.9**	0.0029	0.056	0.019	0.0023	0.12	0.029	0.046
	12/04/17	200.7/200.8	*<0.05**	0.11	<0.002	<0.006	<0.006	0.39	<0.0025	0.011	*<0.05**	0.014	<0.2	0.028	0.0078
	09/05/17	200.7/200.8	0.007	0.14	<0.002	0.0038	<0.006	**1.9**	0.0021	0.036	0.028	<0.005	<0.2	0.029	0.032
	06/02/17	200.7/200.8	0.0045	0.16	<0.002	0.0027	<0.006	**3.1**	0.0029	0.062	0.014	<0.005	<0.2	0.027	0.054
	02/21/17	200.7/200.8	0.0094	0.29	<0.002	0.0042	<0.006	**3.1**	0.0043	0.14	0.019	<0.005	<0.2	NA	0.031
	11/14/16	200.7/200.8	**0.011**	0.24	<0.002	0.0096	0.0049	**11**	**0.016**	**0.31**	0.021	0.0079	0.14	0.027	0.29
	09/09/16	200.7/200.8	0.007	0.18	<0.002	<0.006	<0.006	**1.4**	0.0013	0.029	0.025	<0.005	0.1	0.023	0.026
	06/07/16	200.7/200.8	*<0.05**	0.2	<0.002	<0.006	<0.006	**3**	0.0031	0.056	0.021	<0.005	0.075	0.026	0.053
	03/02/16	200.7/200.8	*<0.02**	0.19	<0.002	0.0028	<0.006	**3.6**	0.0044	0.11	0.011	*<0.05**	<0.2	0.025	0.087
	10/29/15	200.7/200.8	0.0075	0.13	<0.002	<0.006	<0.006	0.15	0.0055	0.032	0.019	<0.005	<0.2	0.023	0.091
	08/11/15	200.7/200.8	*<0.01**	0.22	<0.002	<0.006	<0.006	**6.1**	0.0068	0.11	0.018	<0.005	<0.2	0.025	0.12
	06/02/15	200.7/200.8	*<0.01**	0.24	<0.002	0.0066	<0.006	**3.2**	<0.005	0.095	<0.02	<0.005	<0.2	0.022	0.061
	03/10/15	200.7/200.8	*<0.01**	0.23	<0.002	<0.006	<0.006	**4.3**	<0.01	0.075	0.026	<0.005	<0.2	0.02	0.089
	11/18/14	200.7/200.8	*<0.01**	0.13	<0.002	<0.006	<0.006	0.15	<0.001	0.032	0.024	<0.005	<0.2	0.03	0.032
	09/17/14	200.7/200.8	*<0.01**	0.21	<0.002	0.0092	<0.006	**6.5**	0.0098	0.15	0.022	<0.005	<0.2	0.029	0.23
	06/16/14	200.7/200.8	*<0.01**	0.11	<0.002	<0.006	<0.006	0.42	<0.01	0.055	0.028	<0.005	<0.2	**0.065**	0.26
OW-59	10/15/19	200.7/200.8	0.0096	0.32	<0.002	0.01	0.0065	**8.6**	0.0054	**0.37**	<0.01	0.003	<0.2	NA	0.018
	08/21/19	200.7/200.8	0.0055	0.076	<0.002	0.0016	<0.006	**2.1**	0.0014	**0.22**	<0.005	0.0038	<0.2	**0.13**	<0.01
	05/02/19	200.7/200.8	0.0095	0.41	<0.002	0.014	0.01	**11**	0.0095	**0.54**	0.0038	0.0044	<0.2	**0.14**	0.023
	02/13/19	200.7/200.8	0.0055	0.066	<0.002	<0.006	<0.006	**1.8**	0.0017	0.13	<0.005	0.0052	0.044	**0.13**	0.015
	11/07/18	200.7/200.8	0.0074	0.058	<0.002	0.0019	<0.006	**1.6**	0.0014	0.12	<0.005	0.0068	<0.2	**0.14**	0.0078
	08/28/18	200.7/200.8	0.0068	0.038	<0.002	<0.006	0.0043	0.97	<0.0025	0.064	<0.005	0.0056	0.097	**0.14**	0.0049
	05/08/18	200.7/200.8	0.0076	0.02	<0.002	<0.006	0.0059	0.36	<0.0005	0.041	<0.01	0.003	0.058	**0.14**	<0.01
	02/22/18	200.7/200.8	**0.012**	0.16	<0.002	<0.006	0.0073	**4.9**	0.0039	0.19	<0.02	<0.005	0.042	**0.16**	<0.05
	12/06/17	200.7/200.8	0.0095	0.064	<0.002	<0.006	0.0042	**2.1**	0.0014	0.17	<0.02	0.0037	<0.2	**0.17**	0.0041

8.14.2 STP1-NW, OW-59, OW-60, OW-62
Total Metals Analytical Result Summary

STANDARDS			PARAMETERS												
			Arsenic (mg/L)	Barium (mg/L)	Cadmium (mg/L)	Chromium (mg/L)	Copper (mg/L)	Iron (mg/L)	Lead (mg/L)	Manganese (mg/L)	Selenium (mg/L)	Silver (mg/L)	Mercury (ug/L)	Uranium (mg/L)	Zinc (mg/L)
WQCC 20 NMAC 6.2.3103 (DEC 2018)			**0.01**	**2**	**0.005**	**0.05**	**1.0**	**1.0**	**0.015**	**0.2**	**0.05**	**0.05**	**2**	**0.03**	**10.0**
40 CFR 141.62 MCL			0.01	2.0	0.005	0.1	1.3	NE	0.015	NE	0.05	NE	2	0.03	NE
NMED TAP WATER (JUNE 2019)			0.000855	3.28	0.00624	0.0057	0.7898	13.8	NE	2.02	0.0987	0.0812	0.626	0.0592	5.96
EPA RSL TAP WATER (NOVEMBER 2019)			0.000052	3.8	0.00092	22	0.8	14	0.015	0.43	0.1	0.094	0.63	0.004	6
WELL ID	**DATE SAMPLED**	**METHOD**													
OW-60	10/15/19	200.7/200.8	0.0052	0.43	<0.002	**0.078**	0.013	**11**	0.0059	**0.47**	0.018	<0.005	<0.2	NA	0.058
	08/21/19	200.7/200.8	0.0048	0.49	<0.002	0.038	0.0088	**15**	0.012	**0.57**	0.022	<0.005	0.14	**0.054**	0.041
	05/02/19	200.7/200.8	0.0047	0.82	<0.002	0.031	0.0072	**16**	0.014	**0.86**	0.017	<0.005	0.061	**0.053**	0.04
	02/13/19	200.7/200.8	0.0029	0.2	<0.002	0.011	<0.006	**4.8**	0.0037	**0.21**	0.016	0.0025	0.061	**0.051**	0.015
	11/07/18	200.7/200.8	0.0039	0.2	<0.002	0.014	<0.006	**5**	0.0038	**0.22**	0.018	0.0036	0.045	**0.054**	0.018
	08/28/18	200.7/200.8	0.0029	0.096	<0.002	0.0063	0.0064	**2.5**	0.0017	0.19	0.016	0.0031	0.096	**0.053**	0.0081
	05/08/18	200.7/200.8	0.0055	0.36	<0.002	0.019	0.009	**8.4**	0.0077	**1.3**	0.022	0.0013	0.049	**0.052**	0.021
	02/22/18	200.7/200.8	**0.011**	0.23	<0.002	0.02	0.0063	**6.7**	0.0051	**0.25**	0.032	0.0021	0.052	**0.053**	0.019
	12/06/17	200.7/200.8	*<0.02**	0.12	<0.002	0.0033	<0.006	**3.1**	0.002	0.13	0.021	0.0024	<0.2	**0.048**	0.0097
OW-62[1]	11/18/19	--							SPH						
	08/20/19	--							SPH						
	05/15/19	--							SPH						
	02/19/19	--							SPH						
	11/29/18	200.7/200.7	0.007	0.21	<0.002	0.0079	0.0086	**4.6**	0.0032	**0.45**	<0.001	<0.005	<0.2	NA	0.024
	08/22/18	200.7/200.8	0.0068	0.12	<0.002	0.0025	0.0078	**1.4**	0.0012	**0.34**	<0.001	<0.005	0.038	<0.0005	0.044
	04/29/18	200.7/200.8	**0.014**	0.24	<0.002	0.012	0.0092	**7.6**	0.0049	**0.44**	<0.001	<0.005	NA	**0.035**	0.024

DEFINITIONS

NA = Not analyzed; NE = Not established.

Bold and highlighted values represent values above the applicable standards

STANDARDS

WQCC 20 NMAC 6.2.3103 - Standards for Ground Water of 10,000 mg/l TDS Concentration or Less.

a) Human Health Standards; b) Other Standards for Domestic Water

40 CFR 141.62 Maximum Contaminant Levels for Inorganic Contaminants

NMED Risk Assessment Guidance for Investigations and Remediations Table A-1

EPA Regional Screening Level (RSL) Summary Table

NOTES

Wells marked in red were not sampled because of SPH

Items notes with a * and italics have a detection limit greater than or equal to the applicable standard.

1 - OW-62 not sampled during 2019 - SPH present.

8.14.3 STP1-NW, OW-59, OW-60, OW-62
Dissolved Metals Analytical Result Summary

			PARAMETERS											
STANDARDS			Arsenic (mg/L)	Barium (mg/L)	Cadmium (mg/L)	Chromium (mg/L)	Copper (mg/L)	Iron (mg/L)	Lead (mg/L)	Manganese (mg/L)	Selenium (mg/L)	Silver (mg/L)	Uranium (mg/L)	Zinc (mg/L)
WQCC 20 NMAC 6.2.3103 (DEC 2018)			**0.01**	**2**	**0.005**	**0.05**	**1.0**	**1.0**	**0.015**	**0.2**	**0.05**	**0.05**	**0.03**	**10.0**
40 CFR 141.62 MCL			0.01	2.0	0.005	0.1	1.3	NE	0.015	NE	0.05	NE	0.03	NE
NMED TAP WATER (JUNE 2019)			0.000855	3.28	0.00624	0.0057	0.7898	13.8	NE	2.02	0.0987	0.0812	0.0592	5.96
EPA RSL TAP WATER (NOVEMBER 2019)			0.000052	3.8	0.00092	22	0.8	14	0.015	0.43	0.1	0.094	0.004	6
WELL ID	DATE SAMPLED	METHOD												
STP1-NW	10/22/19	200.7/200.8	0.0024	0.11	<0.002	<0.006	<0.006	0.026	<0.0025	0.00056	0.0041	0.0032	NA	0.036
	08/21/19	200.7/200.8	0.0021	0.15	<0.002	<0.006	0.006	0.029	<0.0025	<0.002	0.0039	0.0021	**0.031**	0.0096
	05/08/19	200.7/200.8	0.0021	0.11	<0.002	<0.006	0.0029	0.033	<0.0025	0.00036	0.005	0.0024	**0.034**	0.012
	02/13/19	200.7/200.8	0.0021	0.11	<0.002	<0.006	0.0053	0.031	<0.0005	0.0024	0.0047	0.0017	**0.035**	0.029
	11/19/18	200.7/200.8	0.0027	0.094	<0.002	<0.006	0.0037	0.035	<0.0005	0.0016	0.0058	0.0019	**0.033**	0.023
	09/06/18	200.7/200.8	0.0033	0.074	<0.002	<0.006	<0.006	0.027	<0.0025	<0.002	0.0071	<0.005	**0.044**	0.011
	04/30/18	200.7/200.8	0.0031	0.1	<0.002	<0.006	<0.006	0.032	<0.0025	<0.002	0.0065	<0.005	0.03	0.0066
	02/09/18	200.7/200.8	*<0.02**	0.12	<0.002	<0.006	0.0043	0.076	<0.0005	0.0017	0.018	0.0039	0.028	0.0084
	12/04/17	200.7/200.8	0.009	0.11	<0.002	<0.006	<0.006	0.039	<0.0005	0.00078	0.019	<0.005	0.027	0.011
	09/05/17	200.7/200.8	*<0.05**	0.11	<0.002	0.0029	<0.006	0.04	<0.0025	0.0016	0.029	<0.005	0.027	0.15
	06/02/17	200.7/200.8	0.0055	0.13	<0.002	<0.006	<0.006	0.037	<0.0005	0.00046	0.017	<0.005	0.025	0.014
	02/21/17	200.7/200.8	0.0063	0.12	<0.002	<0.006	<0.006	0.031	<0.0025	0.00045	0.002	<0.005	NA	0.02
	11/14/16	200.7/200.8	0.0089	0.13	<0.002	<0.006	<0.006	0.2	0.00039	0.0086	0.033	<0.005	0.026	0.01
	09/09/16	200.7/200.8	0.0084	0.17	<0.002	<0.006	<0.006	0.037	<0.0005	0.00053	0.026	<0.005	0.023	0.039
	06/07/16	200.7/200.8	0.0082	0.17	<0.002	<0.006	<0.006	0.067	<0.0025	0.0024	0.025	<0.005	0.026	0.007
	03/02/16	200.7/200.8	0.005	0.14	<0.002	<0.006	<0.006	0.13	0.0003	0.0038	0.015	<0.005	0.023	0.02
	10/29/15	200.7/200.8	*<0.01**	0.14	<0.002	<0.006	<0.006	0.066	<0.0025	0.0032	0.031	<0.005	0.022	<0.01
	08/11/15	200.7/200.8	*<0.01**	0.13	<0.002	<0.006	<0.006	0.12	<0.0025	0.0039	0.018	<0.005	0.022	<0.01
	06/02/15	200.7/200.8	*<0.01**	0.13	<0.002	<0.006	<0.006	0.045	<0.01	<0.002	0.02	<0.005	0.021	<0.01
	03/10/15	200.7/200.8	*<0.05**	0.18	<0.002	<0.006	<0.006	0.091	<0.001	0.0039	*<0.05**	<0.005	0.023	0.034
	11/18/14	200.7/200.8	*<0.01**	0.12	<0.002	<0.006	<0.006	0.026	<0.001	0.028	0.023	<0.005	0.026	0.058
	09/08/14	200.7/200.8	*<0.01**	0.12	*<0.02**	<0.006	<0.006	0.046	<0.01	0.033	0.027	<0.005	0.029	0.018
OW-59	10/15/19	200.7/200.8	0.0061	0.017	<0.002	<0.006	0.0056	0.13	<0.0025	0.03	0.003	0.0056	NA	0.015
	08/21/19	200.7/200.8	0.0045	0.011	<0.002	<0.006	0.0067	0.023	<0.0025	0.13	0.0016	0.0031	**0.12**	0.013
	05/02/19	200.7/200.8	0.004	0.013	<0.002	<0.006	0.0038	0.12	0.00036	0.053	0.0022	0.0042	**0.14**	0.05
	02/13/19	200.7/200.8	0.0043	0.011	<0.002	<0.006	0.0046	0.031	<0.0005	0.054	0.001	0.0043	<0.0005	0.15
	11/07/18	200.7/200.8	0.0049	0.011	<0.002	<0.006	<0.006	0.02	<0.0005	0.038	0.00094	0.0051	**0.15**	0.02
	08/28/18	200.7/200.8	0.0053	0.011	<0.002	<0.006	<0.006	<0.02	<0.0025	0.025	<0.005	0.0057	**0.14**	0.0068
	05/08/18	200.7/200.8	0.0061	0.011	<0.002	<0.006	<0.006	<0.02	<0.005	0.026	<0.01	0.0042	**0.14**	0.0046
	02/22/18	200.7/200.8	*<0.2**	0.0084	*<0.01**	<0.006	<0.03	<0.1	<0.0025	0.048	*<0.2**	<0.025	**0.16**	<0.01
	12/06/17	200.7/200.8	**0.012**	0.013	<0.002	<0.006	<0.006	0.024	<0.0025	0.13	0.023	0.0047	**0.14**	0.011

8.14.3 STP1-NW, OW-59, OW-60, OW-62
Dissolved Metals Analytical Result Summary

STANDARDS			PARAMETERS											
			Arsenic (mg/L)	Barium (mg/L)	Cadmium (mg/L)	Chromium (mg/L)	Copper (mg/L)	Iron (mg/L)	Lead (mg/L)	Manganese (mg/L)	Selenium (mg/L)	Silver (mg/L)	Uranium (mg/L)	Zinc (mg/L)
WQCC 20 NMAC 6.2.3103 (DEC 2018)			**0.01**	**2**	**0.005**	**0.05**	**1.0**	**1.0**	**0.015**	**0.2**	**0.05**	**0.05**	**0.03**	**10.0**
40 CFR 141.62 MCL			0.01	2.0	0.005	0.1	1.3	NE	0.015	NE	0.05	NE	0.03	NE
NMED TAP WATER (JUNE 2019)			0.000855	3.28	0.00624	0.0057	0.7898	13.8	NE	2.02	0.0987	0.0812	0.0592	5.96
EPA RSL TAP WATER (NOVEMBER 2019)			0.000052	3.8	0.00092	22	0.8	14	0.015	0.43	0.1	0.094	0.004	6
WELL ID	**DATE SAMPLED**	**METHOD**												
OW-60	10/15/19	200.7/200.8	0.0018	0.031	<0.002	0.0052	0.0071	0.14	<0.0025	0.03	0.021	0.0038	NA	0.037
	08/21/19	200.7/200.8	0.0018	0.056	<0.002	0.0031	0.0039	0.38	0.00063	0.062	0.015	0.0017	**0.051**	0.0066
	05/02/19	200.7/200.8	0.0014	0.042	<0.002	0.003	0.0038	0.12	0.00047	0.04	0.018	0.0022	**0.054**	0.019
	02/13/19	200.7/200.8	0.0015	0.026	<0.002	0.0017	0.0037	0.0097	<0.0005	0.031	0.016	0.0028	**0.06**	0.027
	11/07/18	200.7/200.8	0.0018	0.03	<0.002	0.0047	<0.006	0.042	<0.0005	0.022	0.016	0.0028	**0.056**	0.029
	08/28/18	200.7/200.8	<0.005	0.028	<0.002	0.0032	<0.003	0.023	<0.0025	0.017	0.019	0.0032	**0.052**	0.0068
	05/08/18	200.7/200.8	0.0026	0.03	<0.002	0.0091	<0.006	0.11	<0.0025	0.0084	0.023	0.0024	**0.05**	0.0068
	02/22/18	200.7/200.8	*<0.2**	0.024	*<0.01**	0.0057	<0.03	<0.1	<0.0025	<0.01	*<0.2**	<0.025	**0.046**	0.012
	12/06/17	200.7/200.8	**0.013**	0.029	<0.002	<0.006	<0.006	0.02	<0.0005	0.042	0.031	0.0029	**0.047**	0.01
OW-62[1]	11/18/19	--							SPH					
	08/20/19	--							SPH					
	05/15/19	--							SPH					
	02/19/19	--							SPH					
	11/29/18	200.7/200.7	0.0063	0.08	<0.002	<0.006	<0.006	0.35	<0.0005	**0.33**	<0.001	<0.005	NA	0.018
	08/22/18	200.7/200.8	0.0061	0.087	<0.002	<0.006	<0.006	0.02	<0.0005	**0.31**	<0.001	<0.005	**0.046**	0.0077
	04/29/18	200.7/200.8	**0.012**	0.061	<0.002	<0.006	<0.006	0.067	<0.0005	0.18	<0.001	<0.005	**0.039**	<0.01

DEFINITIONS

NA = Not analyzed; NE = Not established.

Bold and highlighted values represent values above the applicable standards

STANDARDS

WQCC 20 NMAC 6.2.3103 - Standards for Ground Water of 10,000 mg/l TDS Concentration or Less.

a) Human Health Standards; b) Other Standards for Domestic Water

40 CFR 141.62 Maximum Contaminant Levels for Inorganic Contaminants

NMED Risk Assessment Guidance for Investigations and Remediations Table A-1

EPA Regional Screening Level (RSL) Summary Table

NOTES

Wells marked in red were not sampled because of SPH

Items notes with a * and italics have a detection limit greater than or equal to the applicable standard.

1 - OW-62 not sampled during 2019 - SPH present.

8.14.4 STP1-NW, OW-59, OW-60, OW-62
Organic Compounds Analytical Result Summary

STANDARDS			PARAMETERS												
			Acetone (mg/L)	Benzoic Acid (mg/L)	Bis(2-ethylhexyl) phthalate (mg/L)	Isopropyl-benzene (mg/L)	Naphthalene (mg/L)	1-Methyl naphthalene (mg/L)	2-Methyl naphthalene (mg/L)	n-Butyl benzene (mg/L)	n-Propyl-benzene (mg/L)	Sec-butyl benzene (mg/L)	1,2,4-Trimethyl-benzene (mg/L)	1,3,5-Trimethyl-benzene (mg/L)	Phenol (mg/L)
WQCC 20 NMAC 6.2.3103 (DEC 2018)			NE	NE	NE	NE	**0.03**	NE	NE	NE	NE	NE	NE	NE	**0.005**
40 CFR 141.61 MCL			NE	NE	**0.006**	NE	NE	NE	NE	NE	NE	NE	NE	NE	NE
NMED TAP WATER (JUNE 2019)			**14.06**	NE	0.0556	**0.447**	0.00165	**0.0114**	**0.035**	NE	NE	NE	NE	NE	5.76
EPA RSL TAP WATER (NOVEMBER 2019)			14	**75**	0.056	0.45	0.00017	0.0011	0.036	**1**	**0.66**	**2**	**0.056**	**0.06**	5.8
WELL ID	**DATE SAMPLED**	**METHOD**													
STP1-NW	10/22/19	8260B/8270B	<0.01	<0.02	0.00073	<0.001	<0.002	<0.004	<0.004	<0.003	<0.001	<0.001	<0.001	<0.001	*<0.01**
	08/21/19	8260B/8270B	0.0017	<0.02	*<0.01**	<0.001	<0.002	<0.004	<0.004	<0.003	<0.001	<0.001	<0.001	<0.001	*<0.01**
	05/08/19	8260B/8270B	<0.01	<0.02	*<0.01**	<0.001	<0.002	<0.004	<0.004	<0.003	<0.001	<0.001	<0.001	<0.001	*<0.01**
	02/13/19	8260B/8270B	0.0021	<0.02	NA	<0.001	<0.002	<0.004	<0.004	<0.003	<0.001	<0.001	<0.001	<0.001	*<0.01**
	11/19/18	8260B/8270B	<0.01	<0.02	*<0.01**	<0.001	<0.002	<0.004	<0.004	<0.003	<0.001	<0.001	<0.001	<0.001	*<0.01**
	09/06/18	8260B/8270B	0.0018	NA	NA	<0.001	<0.002	<0.004	<0.004	<0.003	<0.001	<0.001	<0.001	<0.001	NA
	04/30/18	8260B/8270B	<0.01	NA	NA	<0.001	<0.002	<0.004	<0.004	<0.003	<0.001	<0.001	0.00017	<0.001	NA
	02/09/18	8260B/8270B	<0.01	NA	NA	0.00014	<0.002	<0.004	<0.004	<0.003	0.00015	<0.001	0.0051	0.0022	NA
	12/04/17	8260B/8270B	0.0041	NA	NA	<0.001	<0.002	<0.004	<0.004	<0.003	<0.001	<0.001	<0.001	<0.001	NA
	09/05/17	8260B/8270B	0.0058		NA			0.00054							
	06/02/17	8260B/8270B	0.0031		NA			<0.004							
	02/21/17	8260B/8270B	<0.01		NA			<0.004							
	11/14/16	8260B/8270B	<0.01		NA			<0.004							
	09/09/16	8260B/8270B	0.011		NA			<0.004							
	06/07/16	8260B/8270B	<0.01		NA			0.00045							
	03/02/16	8260B/8270B	0.0038		NA										
	06/02/15	8260B/8270B			*<0.01**										
	03/10/15	8260B/8270B			*<0.01**										
	11/18/14	8260B/8270B			0.011										
OW-59	10/15/19	8260B/8270B	<0.01	<0.01	*<0.01**	<0.001	<0.002	<0.004	<0.004	<0.001	<0.001	<0.001	<0.001	<0.001	*<0.01**
	08/21/19	8260B/8270B	0.0056	<0.01	*<0.01**	<0.001	<0.002	<0.004	<0.004	<0.001	<0.001	<0.001	<0.001	<0.001	*<0.01**
	05/02/19	8260B/8270B	0.0071	<0.02	*<0.01**	<0.001	<0.002	<0.004	<0.004	<0.003	<0.001	<0.001	0.0003	<0.001	*<0.01**
	02/13/19	8260B/8270B	0.0028	<0.02	*<0.01**	<0.001	<0.002	<0.004	<0.004	<0.003	<0.001	<0.001	<0.001	<0.001	*<0.01**
	11/07/18	8260B/8270B	0.0037	<0.02	*<0.01**	<0.002	<0.004	<0.008	<0.004	<0.006	<0.003	<0.003	<0.002	<0.002	*<0.01**
	08/28/18	8260B/8270B	0.0043	<0.02	*<0.01**	<0.001	<0.002	<0.004	<0.004	<0.003	<0.001	<0.001	<0.001	<0.001	*<0.01**
	05/08/18	8260B/8270B	0.0015	<0.02	*<0.01**	<0.001	<0.002	<0.004	<0.004	<0.003	<0.001	<0.001	<0.001	<0.001	*<0.01**
	02/22/18	8260B/8270B	0.0033	0.014	*<0.01**	<0.001	<0.002	<0.004	<0.004	<0.003	<0.001	<0.001	<0.001	<0.001	*<0.01**
	12/06/17	8260B/8270B	0.0028	0.0045	*<0.01**	<0.001	<0.002	<0.004	<0.004	<0.003	<0.001	<0.001	<0.001	<0.001	*<0.01**

8.14.4 STP1-NW, OW-59, OW-60, OW-62
Organic Compounds Analytical Result Summary

STANDARDS			PARAMETERS												
			Acetone (mg/L)	Benzoic Acid (mg/L)	Bis(2-ethylhexyl) phthalate (mg/L)	Isopropyl-benzene (mg/L)	Naphthalene (mg/L)	1-Methyl naphthalene (mg/L)	2-Methyl naphthalene (mg/L)	n-Butyl benzene (mg/L)	n-Propyl-benzene (mg/L)	Sec-butyl benzene (mg/L)	1,2,4-Trimethyl-benzene (mg/L)	1,3,5-Trimethyl-benzene (mg/L)	Phenol (mg/L)
WQCC 20 NMAC 6.2.3103 (DEC 2018)			NE	NE	NE	NE	**0.03**	NE	NE	NE	NE	NE	NE	NE	**0.005**
40 CFR 141.61 MCL			NE	NE	**0.006**	NE	NE	NE	NE	NE	NE	NE	NE	NE	NE
NMED TAP WATER (JUNE 2019)			**14.06**	NE	0.0556	**0.447**	0.00165	**0.0114**	**0.035**	NE	NE	NE	NE	NE	5.76
EPA RSL TAP WATER (NOVEMBER 2019)			14	**75**	0.056	0.45	0.00017	0.0011	0.036	**1**	**0.66**	**2**	**0.056**	**0.06**	5.8
WELL ID	**DATE SAMPLED**	**METHOD**													
OW-60	10/15/19	8260B/8270B	0.0038	<0.02	*<0.01**	<0.001	<0.002	<0.004	<0.004	<0.003	<0.001	<0.001	<0.001	<0.001	*<0.01**
	08/21/19	8260B/8270B	<0.01	<0.02	*<0.01**	<0.001	<0.002	0.00093	0.0011	<0.003	<0.001	<0.001	<0.001	<0.001	*<0.01**
	05/02/19	8260B/8270B	0.0094	<0.02	*<0.01**	<0.001	<0.002	<0.004	<0.004	<0.003	<0.001	<0.001	<0.001	<0.001	*<0.01**
	02/13/19	8260B/8270B	0.0017	<0.02	*<0.01**	<0.001	<0.002	<0.004	<0.004	<0.003	<0.001	<0.001	<0.001	<0.001	*<0.01**
	11/07/18	8260B/8270B	0.0021	<0.02	*<0.01**	<0.001	<0.002	<0.004	<0.004	<0.003	<0.001	<0.001	<0.001	<0.001	*<0.01**
	08/28/18	8260B/8270B	0.0032	0.0071	*<0.01**	<0.001	<0.002	<0.004	<0.004	<0.003	<0.001	<0.001	<0.001	<0.001	*<0.01**
	05/08/18	8260B/8270B	<0.01	<0.02	*<0.01**	<0.001	<0.002	<0.004	<0.004	<0.003	<0.001	<0.001	<0.001	<0.001	*<0.01**
	02/22/18	8260B/8270B	0.0018	0.0057	*<0.01**	<0.001	<0.002	<0.004	<0.004	<0.003	<0.001	<0.001	<0.001	<0.001	*<0.01**
	12/06/17	8260B/8270B	0.0025	<0.02	**0.045**	<0.001	<0.002	<0.004	<0.004	<0.003	<0.001	<0.001	<0.001	<0.001	*<0.01**
OW-62[1]	11/18/19	--							SPH						
	08/20/19	--							SPH						
	05/15/19	--							SPH						
	02/19/19	--							SPH						
	11/29/18	8260B/8270B	<0.05	0.017	*<0.01**	<0.005	<0.01	*<0.02**	<0.02	<0.015	<0.005	<0.005	<0.005	<0.005	**0.0064**
	08/22/18	8260B/8270B	0.59	0.0092	*<0.01**	0.054	**0.33**	**0.092**	**0.11**	0.022	0.18	0.0072	0.014	0.036	**0.029**
	04/29/18	8260B/8270B	<0.01	<0.02	*<0.01**	0.003	0.0029	<0.004	<0.004	<0.003	0.0015	<0.001	0.0061	0.017	**0.072**

DEFINITIONS

NA = Not analyzed; NE = Not established.

Bold and highlighted values represent values above the applicable standards

STANDARDS

WQCC 20 NMAC 6.2.3103 - Standards for Ground Water of 10,000 mg/l TDS Concentration or Less.

a) Human Health Standards; b) Other Standards for Domestic Water

40 CFR 141.61 Maximum Contaminant Levels for Organic Contaminants

NMED Risk Assessment Guidance for Investigations and Remediations Table A-1

EPA Regional Screening Level (RSL) Summary Table

NOTES

Wells marked in red were not sampled because of SPH

Items notes with a * and italics have a detection limit greater than or equal to the applicable standard.

1 - OW-62 not sampled during 2019 - SPH present.

8.15 EVAPORATION PONDS (EP-1 thru EP-12B)

BTEX, MTBE and General Chemistry Analytical Result Summary

STANDARDS			PARAMETERS											
			Benzene (mg/L)	Toluene (mg/L)	Ethyl-benzene (mg/L)	Total Xylenes (mg/L)	MTBE (mg/L)	Fluoride (mg/L)	Chloride (mg/L)	Nitrite (mg/L)	Nitrate (mg/L)	Sulfate (mg/L)	pH	Specific Conductance (µS/cm)
WQCC 20NMAC 6.2.3103			0.005	1	0.7	0.62	0.1	1.6	250	1	10	600.0	6 to 9	NE
40 CFR 141.61 and 141.62 MCL			0.005	1	0.7	10	NE	4.0	NE	1	10	NE	NE	NE
NMED Tap Water (Rev 2. JUN 2019)			0.00455	1.09	0.0149	0.193	0.143	1.18	NE	1.97	31.60	NE	NE	NE
EPA RSL for Tap Water (NOV 2019)			0.0046	1.1	0.0015	0.19	0.14	0.8	NE	2	32	NE	NE	NE
POND ID	DATE SAMPLED	METHOD												
EP-1			*Not sampled - no longer in service*											
	11/12/14	8260B	*<0.01**	<0.01	<0.01	<0.015	<0.01	24	4200	*<10**	<1.0	5800	8	17000
	03/05/14	8260B	*<0.01**	<0.01	<0.01	<0.015	<0.01	18	1500	*<1.0**	<1.0	2100	7.87	7600
	10/15/13	8260B	*<0.01**	<0.01	<0.01	<0.015	<0.01	21	1300	*<2.0**	<2.0	2000	6.96	6900
	05/28/13	8260B	*<0.01**	<0.01	<0.01	<0.015	<0.01	20	1000	*<1.0**	<1.0	1200	8.05	6200
	11/06/12	8260B	*<0.01**	<0.01	<0.01	<0.015	<0.01	72	570	*<2.0**	<2.0	980	8.79	5500
	05/29/12	8260B	*<0.01**	<0.01	<0.01	<0.015	<0.01	34	3400	<0.5	<0.5	1300	7.75	8800
	11/01/11	8260B	*<0.01**	<0.01	<0.01	<0.015	<0.01	240	3000	*<10**	<10	1200	8.71	12000
	05/23/11	8260B	*<0.01**	<0.01	<0.01	<0.015	<0.01	590	200	*<1.0**	3.2	980	5.49	6200
	11/16/10	8260B	<0.001	<0.001	<0.001	0.0078	<0.0015	350	140	4.8	4.8	1000	7.40	4300
	08/02/10	8260B	<0.001	0.0077	<0.001	<0.0015	<0.001	99	310	*<4.0**	<4.0	870	7.68	3700
	04/20/10	8260B	<0.001	<0.001	<0.001	<0.0015	<0.001	340	330	*<1.0**	<1.0	1500	8.36	5400
EP-2	11/21/19	8260B/300.0	0.018	0.0099	<0.01	<0.015	<0.01	<0.5	510	<0.5	<0.5	1700	7.99	13000
	04/30/19	8260B/300.0	*<0.01**	<0.01	<0.01	<0.015	<0.01	38	1700	<0.5	<0.5	1200	8.03	7100
	09/06/18	8260B	0.0012	<0.001	<0.001	0.0018	<0.001	25	1700	*<2.0**	<2.0	800	NA	NA
	02/21/18	8260B	0.021	0.034	0.0057	0.035	<0.005	11	2600	*<2.0**	<0.5	910	NA	NA
	10/24/17	8260B	*<0.005**	<0.005	<0.005	<0.0075	<0.005	36	3900	*<10**	<1.0	1100	7.33	17000
	03/30/17	8260B	0.013	0.022	0.0068	0.023	<0.005	35	3500	*<4.0**	<4	1200	7.58	17000
	08/29/16	8260B	0.0039	0.0029	0.00043	0.0024	<0.001	22	3000	*<2.0**	<0.5	1600	7.69	14000
	03/02/16	8260B	0.024	0.044	0.0049	0.032	<0.005	5	3100	*<4.0**	<4.0	1400	7.66	16000
	09/01/15	8260B	0.01	0.022	<0.01	<0.015	<0.01	<1.0	2900	*<1.0**	<1.0	960	7.87	14000
	03/24/15	8260B	*<0.1**	<0.01	<0.01	<0.015	<0.01	35	1700	*<1.0**	<1.0	1200	7.45	8200
	11/12/14	8260B	*<0.01**	<0.01	<0.01	<0.015	<0.01	40	2400	*<10**	<1.0	1300	7.97	8900
	03/05/14	8260B	*<0.01**	<0.01	<0.01	<0.015	<0.01	37	1900	*<1.0**	<1.0	680	7.87	7600
	10/15/13	8260B	*<0.01**	<0.01	<0.01	<0.015	<0.01	70	1100	*<2.0**	<2.0	680	8.33	6500
	05/28/13	8260B	*<0.01**	<0.01	<0.01	<0.015	<0.01	42	310	*<1.0**	<1.0	1700	7.49	6000
	11/06/12	8260B	*<0.01**	<0.01	<0.01	<0.015	<0.01	84	290	*<2.0**	<2.0	820	8.31	6900
	05/29/12	8260B	*<0.01**	<0.01	<0.01	<0.015	<0.01	55	6600	*<2.0**	<0.5	1300	7.60	20000
	11/01/11	8260B	*<0.01**	<0.01	<0.01	<0.015	<0.01	46	2700	*<20**	<20	1700	8.35	15000
	05/23/11	8260B	*<0.01**	<0.01	<0.01	<0.015	<0.01	65	3700	*<20**	<20	990	7.84	18000
	11/16/10	8260B	<0.001	0.003	0.0019	0.015	<0.0015	41	3500	*<10**	<10	970	7.38	14000
	08/02/10	8260B	<0.001	<0.001	<0.001	<0.0015	<0.001	43	1600	*<4.0**	<4.0	970	7.91	6400
	04/20/10	8260B	<0.001	0.0013	<0.001	0.0043	<0.001	170	1100	*<2.0**	<0.5	1200	7.56	5800
EP-3	11/20/19	8260B/300.0	*<0.005**	<0.01	<0.01	<0.015	<0.01	37	770	*<2.0**	0.22	1500	7.71	8200
	04/30/19	8260B/300.0	*<0.01**	<0.01	<0.01	<0.015	<0.01	34	2200	*<2.0**	<0.5	1500	7.58	8200
	09/06/18	8260B	0.00039	0.00054	<0.001	<0.0015	<0.001	31	1900	*<2.0**	<2.0	890	NA	NA
	02/21/18	82660B	0.0034	0.0054	0.00082	0.0048	<0.005	10	3700	*<2.0**	<0.5	830	NA	NA
	10/24/17	8260B	*<0.005**	<0.005	<0.005	<0.0075	<0.005	31	4800	*<4.0**	<4	1100	7.77	19000
	03/30/17	8260B	0.004	0.0069	0.0032	0.0092	<0.005	10	5000	*<2.0**	<0.5	1200	7.92	23000
	08/29/16	8260B	0.0084	0.0052	0.00084	0.0039	<0.001	18	5100	*<2.0**	<0.5	1600	7.78	20000
	03/02/16	8260B	*<0.005**	<0.005	<0.005	<0.0075	<0.005	29	4400	*<4.0**	<4.0	1300	7.88	18000
	09/01/15	8260B	0.011	0.019	<0.01	<0.015	<0.01	23	5300	*<1.0**	<1.0	650	7.81	19000
	03/24/15	8260B	*<0.01**	<0.01	<0.01	<0.015	<0.01	17	4000	*<1.0**	<1.0	900	7.85	20000
	11/12/14	8260B	*<0.01**	<0.01	<0.01	<0.015	<0.01	34	4000	*<10**	<1.0	1300	7.85	12000
	03/05/14	8260B	*<0.01**	<0.01	<0.01	<0.015	<0.01	23	3700	*<1.0**	<1.0	670	7.85	12000
	10/15/13	8260B	*<0.01**	<0.01	<0.01	<0.015	<0.01	39	5200	*<4.0**	<4.0	730	7.77	18000
	05/28/13	8260B	*<0.01**	<0.01	<0.01	<0.015	<0.01	21	6500	*<10**	<1.0	1400	7.76	29000
	11/06/12	8260B	*<0.01**	<0.01	<0.01	<0.015	<0.01	77	2000	*<2.0**	<2.0	1200	7.84	12000
	05/29/12	8260B	*<0.01**	<0.01	<0.01	<0.015	<0.01	22	9500	*<4.0**	<4.0	1400	7.68	27000
	11/01/11	8260B	*<0.01**	<0.01	<0.01	<0.01	<0.01	43	6400	*<20**	<20	1600	8.24	17000
	05/23/11	8260B	*<0.01**	<0.01	<0.01	<0.015	<0.01	54	3700	*<5.0**	<1.0	1100	8.02	19000
	11/16/10	8260B	<0.001	0.0012	<0.001	0.0057	<0.0015	11	5100	*<200**	<200	1000	7.66	16000
	08/02/10	8260B	<0.001	<0.001	<0.001	<0.0015	<0.001	41	2800	*<10**	<10	1100	7.76	9000
	04/20/10	8260B	<0.001	<0.001	<0.001	<0.0015	<0.001	63	8400	*<4.0**	*<40**	1100	8.11	32000

8.15 EVAPORATION PONDS (EP-1 thru EP-12B)

BTEX, MTBE and General Chemistry Analytical Result Summary

STANDARDS			PARAMETERS											
			Benzene (mg/L)	Toluene (mg/L)	Ethyl-benzene (mg/L)	Total Xylenes (mg/L)	MTBE (mg/L)	Fluoride (mg/L)	Chloride (mg/L)	Nitrite (mg/L)	Nitrate (mg/L)	Sulfate (mg/L)	pH	Specific Conductance (µS/cm)
WQCC 20NMAC 6.2.3103			0.005	1	0.7	0.62	0.1	1.6	250	1	10	600.0	6 to 9	NE
40 CFR 141.61 and 141.62 MCL			0.005	1	0.7	10	NE	4.0	NE	1	10	NE	NE	NE
NMED Tap Water (Rev 2. JUN 2019)			0.00455	1.09	0.0149	0.193	0.143	1.18	NE	1.97	31.60	NE	NE	NE
EPA RSL for Tap Water (NOV 2019)			0.0046	1.1	0.0015	0.19	0.14	0.8	NE	2	32	NE	NE	NE
POND ID	DATE SAMPLED	METHOD												
EP-4	11/20/19 [1]	--	EP-4, EP-5, and EP-6 combined into one sample (see EP-6)											
	04/30/19	8260B/300.0	<0.01*	<0.01	<0.01	<0.015	<0.01	32	3100	<2.0*	<0.5	1500	7.75	10000
	09/06/18	8260B/300.0	<0.001	<0.001	<0.001	<0.0015	<0.001	28	2700	<2.0*	<2.0	1000	NA	NA
	09/06/18	8260B	<0.001	<0.001	<0.001	<0.0015	<0.001	28	2700	<2.0*	<2.0	1000	NA	NA
	02/21/18	8260B	0.0013	0.0019	<0.005	<0.0075	<0.005	10	4500	<2.0*	<0.5	840	NA	NA
	10/24/17	8260B	<0.005*	<0.005	<0.005	<0.0075	<0.005	31	4900	<4.0*	<4	1100	7.87	18000
	03/30/17	8260B	0.0071	0.013	0.0045	0.014	<0.005	37	4300	<4.0*	<4	1100	7.78	19000
	08/29/16	8260B	0.0025	0.0015	0.00029	0.0013	<0.001	17	5600	<2.0*	<0.5	1900	7.53	24000
	03/02/16	8260B	<0.005*	<0.005	<0.005	<0.0075	<0.005	24	8000	<10*	<10	1800	7.76	31000
	09/01/15	8260B	0.011	0.021	<0.01	<0.015	<0.01	24	5300	<10*	<1.0	690	7.83	19000
	03/24/15	8260B	<0.01*	<0.01	<0.01	<0.015	<0.01	20	7200	<10*	<1.0	1700	7.79	29000
	11/12/14	8260B	<0.01*	<0.01	<0.01	<0.015	<0.01	33	4200	<10*	<1.0	1300	7.91	13000
	03/05/14	8260B	<0.01*	<0.01	<0.01	<0.015	<0.01	18	4300	<1.0*	<1.0	650	7.84	14000
	10/15/13	8260B	<0.01*	<0.01	<0.01	<0.015	<0.01	33	6000	<4.0*	<4.0	830	7.72	20000
	05/28/13	8260B	<0.01*	<0.01	<0.01	<0.015	<0.01	19	7700	<10*	<1.0	1500	7.77	32000
	11/06/12	8260B	<0.01*	<0.01	<0.01	<0.015	<0.01	46	4000	<10*	<10	980	8.13	19000
	05/29/12	8260B	<0.01*	<0.01	<0.01	<0.015	<0.01	20	6500	<2.0*	<0.5	1400	7.87	22000
	11/01/11	8260B	<0.01*	<0.01	<0.01	<0.015	<0.01	39	4300	<20*	<20	1600	7.76	18000
	05/23/11	8260B	<0.01*	<0.01	<0.01	<0.015	<0.01	35	5300	<5.0*	<1.0	1100	8.1	24000
	11/16/10	8260B	<0.001	<0.001	<0.001	<0.003	<0.0015	22	4500	<20*	<20	1100	7.81	18000
	08/02/10	8260B	<0.001	<0.001	<0.001	<0.0015	<0.001	35	2500	<10*	<10	1100	7.89	8700
	04/20/10	8260B	<0.001	<0.001	<0.001	<0.0015	<0.001	67	8000	<4.0*	<40*	1000	8.05	26000
EP-5	11/20/19 [1]	--	EP-4, EP-5, and EP-6 combined into one sample (see EP-6)											
	04/30/19	8260B/300.0	<0.01*	<0.01	<0.01	<0.015	<0.01	31	3900	<2.0*	<0.5	1500	7.81	18000
	09/06/18	8260B/300.0	<0.001	<0.001	<0.001	<0.0015	<0.001	30	5800	<4.0*	<4.0	1500	NA	NA
	09/06/18	8260B	<0.001	<0.001	<0.001	<0.0015	<0.001	30	5800	<4.0*	<4.0	1500	NA	NA
	02/21/18	82660B	0.00041	0.00052	<0.005	<0.0075	<0.005	14	6300	<2.0*	<0.5	1200	NA	NA
	10/24/17	8260B	<0.005*	<0.005	<0.005	<0.0075	<0.005	30	10000	<10*	<10	2200	7.83	34000
	03/30/17	8260B	<0.005*	<0.005	<0.005	<0.0075	<0.005	20	7700	<2.0*	<0.50	1900	7.80	33000
	08/29/16	8260B	0.00011	<0.001	<0.001	<0.0015	<0.001	20	11000	<10*	<10	2900	8.09	39000
	03/02/16	8260B	<0.005*	<0.005	<0.005	<0.0075	<0.005	27	9100	<10*	<10	2000	7.77	31000
	09/01/15	8260B	<0.005*	<0.01	<0.01	<0.015	<0.01	20	8500	<10*	<1.0	1600	7.97	32000
	03/24/15	8260B	<0.01*	<0.01	<0.01	<0.015	<0.01	17	7500	<10*	<1.0	1600	7.82	31000
	11/12/14	8260B	<0.005*	<0.01	<0.01	<0.015	<0.01	27	13000	<10*	<1.0	2100	7.93	44000
	03/05/14	8260B	<0.01*	<0.01	<0.01	<0.015	<0.01	12	5200	<1.0*	<1.0	740	7.83	16000
	10/15/13	8260B	<0.01*	<0.01	<0.01	<0.015	<0.01	29	6500	<4.0*	<4.0	950	7.89	21000
	05/28/13	8260B	<0.01*	<0.01	<0.01	<0.015	<0.01	17	8400	<10*	<1.0	1400	7.67	32000
	11/06/12	8260B	<0.01*	<0.01	<0.01	<0.015	<0.01	16	5600	<50*	<2.0	870	8.13	23000
	05/29/12	8260B	<0.01*	<0.01	<0.01	<0.015	<0.01	21	6100	<4.0*	<4.0	1300	7.84	22000
	11/01/11	8260B	<0.01*	<0.01	<0.01	<0.015	<0.01	26	4300	<20*	<20	1600	7.74	21000
	05/23/11	8260B	<0.01*	<0.01	<0.01	<0.015	<0.01	27	6700	<5.0*	<1.0	1200	8.06	26000
	11/16/10	8260B	<0.001	<0.001	<0.001	<0.003	<0.001	20	4200	<20*	<20	1200	7.86	18000
	08/02/10	8260B	<0.001	<0.001	<0.001	<0.0015	<0.001	39	4800	<10*	<10	1300	7.97	20000
	04/20/10	8260B	<0.001	<0.001	<0.001	<0.0015	<0.001	53	12000	<4.0*	<40*	1100	8.04	40000
EP-6	11/20/19 [1]	8260B/300.0	<0.001	<0.001	<0.001	<0.0015	<0.001	48	4200	<2.0*	<2.0	2000	7.85	18000
	04/29/19	8260B/300.0	<0.01*	<0.01	<0.01	<0.015	<0.01	33	4100	2.6	<0.5	1400	8.01	17000
	09/07/18	8260B	<0.001	<0.001	<0.001	<0.0015	<0.001	33	6300	<10*	<10	1600	NA	NA
	02/21/18	8260B	<0.005*	<0.005	<0.005	<0.0075	<0.005	39	7500	2.6	2.6	1900	NA	NA
	10/24/17	8260B	<0.005*	<0.005	<0.005	<0.0075	<0.005	31	10000	<10*	<1.0	2300	7.92	37000
	03/30/17	8260B	<0.005*	<0.005	<0.005	<0.0075	<0.005	22	7200	<2.0*	<0.5	1800	7.79	33000
	08/29/16	8260B	<0.001	<0.001	<0.001	<0.0015	<0.001	20	10000	<5.0*	<0.5	2600	8.14	41000
	03/02/16	8260B	<0.005*	<0.005	<0.005	<0.0075	<0.005	22	8700	<10*	<1.0	2000	7.79	32000
	09/01/15	8260B	<0.005*	<0.01	<0.01	<0.015	<0.01	21	11000	<10*	<1.0	2000	7.95	39000
	03/25/15	8260B	<0.005*	<0.01	<0.01	<0.015	<0.01	15	7900	<10*	<10	1700	7.83	30000
	11/12/14	8260B	<0.005*	<0.01	<0.01	<0.015	<0.01	26	15000	<10*	<1.0	2200	7.99	48000
	03/05/14	8260B	<0.01*	<0.01	<0.01	<0.015	<0.01	18	6900	<1.0*	<1.0	1500	7.69	23000
	10/15/13	8260B	<0.01*	<0.01	<0.01	<0.015	<0.01	17	11000	<10*	<10	2200	7.66	38000
	05/28/13	8260B	<0.01*	<0.01	<0.01	<0.015	<0.01	15	11000	<10*	<1.0	1900	7.7	41000
	11/06/12	8260B	<0.01*	<0.01	<0.01	<0.015	<0.01	21	11000	<0.5	<2.0	2500	7.93	42000
	05/29/12	8260B	<0.001	<0.001	<0.001	<0.0015	<0.001	20	8800	<4.0*	<4.0	2100	7.86	27000
	11/01/11	8260B	<0.01*	<0.01	<0.01	<0.015	<0.01	24	6900	<20*	<20	2300	7.94	26000
	05/23/11	8260B	<0.01*	<0.01	<0.01	<0.015	<0.01	18	6500	<20*	<20	1300	7.83	23000
	11/16/10	8260B	<0.001	<0.001	<0.001	<0.0015	<0.001	25	6300	<20*	<20	1500	7.74	21000
	08/02/10	8260B	<0.001	<0.001	<0.001	<0.0015	<0.001	21	7400	<4.0*	<40*	1500	8.33	27000
	04/20/10	8260B	<0.001	<0.001	<0.001	<0.0015	<0.001	29	4000	<2.0*	<2.0	1100	7.66	8400

8.15 EVAPORATION PONDS (EP-1 thru EP-12B)

BTEX, MTBE and General Chemistry Analytical Result Summary

STANDARDS			PARAMETERS											
			Benzene (mg/L)	Toluene (mg/L)	Ethyl-benzene (mg/L)	Total Xylenes (mg/L)	MTBE (mg/L)	Fluoride (mg/L)	Chloride (mg/L)	Nitrite (mg/L)	Nitrate (mg/L)	Sulfate (mg/L)	pH	Specific Conductance (µS/cm)
WQCC 20NMAC 6.2.3103			0.005	1	0.7	0.62	0.1	1.6	250	1	10	600.0	6 to 9	NE
40 CFR 141.61 and 141.62 MCL			0.005	1	0.7	10	NE	4.0	NE	1	10	NE	NE	NE
NMED Tap Water (Rev 2. JUN 2019)			0.00455	1.09	0.0149	0.193	0.143	1.18	NE	1.97	31.60	NE	NE	NE
EPA RSL for Tap Water (NOV 2019)			0.0046	1.1	0.0015	0.19	0.14	0.8	NE	2	32	NE	NE	NE
POND ID	DATE SAMPLED	METHOD												
EP-7	11/20/19	8260B/300.0	<0.001	<0.001	<0.001	<0.0015	<0.001	81	210000	<400*	<400*	21000	7.64	510000
	04/29/19	8260B/300.0	<0.01*	<0.01	<0.1	<0.015	<0.01	25	88000	52	<2.0	14000	7.93	180000
	09/07/18	8260B	<0.001	<0.001	<0.001	<0.0015	<0.001	45	70000	<100*	<100	12000	NA	NA
	02/23/18	8260B	<0.001	<0.001	<0.001	<0.0015	<0.001	16	56000	19	19	9900	NA	NA
	10/24/17	8260B	<0.005*	<0.005	<0.005	<0.0075	<0.005	<10*	95000	<100*	<100	18000	7.85	280000
	03/30/17	8260B	<0.005*	<0.005	<0.005	<0.0075	<0.005	11	49000	<4.0*	<40*	9100	8.07	190000
	08/30/16	8260B	<0.005*	<0.01	<0.01	<0.015	<0.01	17	66000	<100*	<100	15000	7.63	220000
	03/02/16	8260B	<0.005*	<0.005	<0.005	<0.0075	<0.005	20	49000	<4.0*	<40*	12000	7.88	130000
	09/01/15	8260B	<0.005*	<0.01	<0.01	<0.015	<0.01	27	59000	<10*	<1.0	12000	7.82	180000
	03/25/15	8260B	<0.005*	<0.01	<0.01	<0.015	<0.01	25	50000	<4.0*	<40*	11000	7.84	140000
	11/12/14	8260B	<0.005*	<0.01	<0.01	<0.015	<0.01	44	61000	<4.0*	<40*	12000	7.82	160000
	03/05/14	8260B	<0.01*	<0.01	<0.01	<0.015	<0.01	28	41000	<10*	<1.0	8500	7.82	130000
	10/15/13	8260B	<0.01*	<0.01	<0.01	<0.015	<0.01	24	52000	<4.0*	<40*	11000	7.68	170000
	05/28/13	8260B	<0.01*	<0.01	<0.01	<0.015	<0.01	28	55000	<10*	<1.0	11000	7.61	190000
	11/06/12	8260B	<0.01*	<0.01	<0.01	<0.015	<0.01	37	81000	<500*	<2.0	15000	7.76	210000
	05/29/12	8260B	<0.01*	<0.01	<0.01	<0.015	<0.01	24	50000	<20*	<20	9500	7.72	150000
	11/01/11	8260B	<0.01*	<0.01	<0.01	<0.015	<0.01	22	46000	<4.0*	<40*	8100	7.82	120000
	05/23/11	8260B	<0.01*	<0.01	<0.01	<0.015	<0.01	27	28000	<100*	<100	8400	7.79	120000
	11/16/10	8260B	<0.001	<0.001	<0.001	<0.003	<0.0015	35	35000	<200*	<200	8400	7.85	84000
	08/02/10	8260B	<0.001	<0.001	<0.001	<0.0015	<0.001	18	62000	<200*	<200	11000	7.41	180000
	04/20/10	8260B	<0.001	<0.001	<0.001	<0.0015	<0.001	16	27000	<200*	<50*	6900	7.31	150000
EP-8	11/20/19	8260B/300.0	<0.001	<0.001	<0.001	<0.0015	<0.001	65	160000	<400*	<400*	14000	7.58	460000
	04/29/19	8260B/300.0	<0.01*	<0.01	<0.01	<0.015	<0.01	26	62000	53	<2.0	1000	7.93	180000
	09/07/18	8260b	<0.001	<0.001	<0.001	<0.0015	<0.001	36	37000	<4.0*	<40*	6600	NA	NA
	02/23/18	8260B	<0.001	<0.001	<0.001	<0.0015	<0.001	17	71000	17	17	12000	NA	NA
	10/24/17	8260B	<0.005*	<0.005	<0.005	<0.0075	<0.005	<10*	94000	<100*	<100	16000	7.86	290000
	03/30/17	8260B	<0.005*	<0.005	<0.005	<0.0075	<0.005	11	64000	<4.0*	<40*	12000	8.07	190000
	08/30/16	8260B	<0.01*	<0.01	<0.01	<0.015	<0.01	17	81000	<4.0*	<40*	13000	7.63	220000
	09/01/15	8260B	<0.005*	<0.01	<0.01	<0.015	<0.01	27	64000	<10*	<1.0	13000	7.80	180000
	03/25/15	8260B	<0.005*	<0.01	<0.01	<0.015	<0.1*	27	65000	<4.0*	<40*	14000	7.96	130000
	11/12/14	8260B	<0.005*	<0.01	<0.01	<0.015	<0.01	41	61000	<4.0*	<40*	11000	7.82	170000
	03/05/14	8260B	<0.01*	<0.01	<0.01	<0.015	<0.01	27	39000	<10*	<1.0	7900	7.82	130000
	10/15/13	8260B	<0.01*	<0.01	<0.01	<0.015	<0.01	33	110000	<4.0*	<40*	18000	7.07	370000
	05/28/13	8260B	<0.01*	<0.01	<0.01	<0.015	<0.01	29	47000	<10*	<1.0	8600	7.59	170000
	11/06/12	8260B	<0.01*	<0.01	<0.01	<0.015	<0.01	71	250000	<500*	<500*	31000	6.58	550000
	05/29/12	8260B	<0.01*	<0.01	<0.01	<0.015	<0.01	33	67000	<20*	<20	9700	7.53	180000
	11/01/11	8260B	<0.01*	<0.01	<0.01	<0.015	<0.01	27	27000	<20*	<20	3600	7.92	66000
	05/23/11	8260B	<0.01*	<0.01	<0.01	<0.015	<0.01	43	170000	<100*	<100	18000	6.83	370000
	11/16/10	8260B	<0.001	<0.001	<0.001	<0.003	<0.0015	44	81000	<200*	<200	12000	7.14	190000
	08/02/10	8260B	<0.001	<0.001	<0.001	<0.0015	<0.001	43	110000	<100*	<100	22000	6.21	300000
	04/20/10	8260B	<0.001	<0.001	<0.001	<0.0015	<0.001	46	49000	<200*	<200	6900	7.31	150000
EP-9	11/20/19	8260B/300.0	<0.001	<0.001	<0.001	<0.0015	<0.001	24	57000	<20*	<2.0	6400	7.68	200000
	04/29/19	8260B/300.0	<0.01*	<0.01	<0.01	<0.015	<0.01	25	55000	39	<2.0	6100	7.98	140000
	09/07/18	8260B	<0.001	<0.001	<0.001	<0.0015	<0.001	42	42000	<4.0*	<40*	4600	NA	NA
	02/23/18	8260B	<0.001	0.00017	<0.001	<0.0015	<0.001	27	28000	5.2	5.2	3900	NA	NA
	10/24/17	8260B	<0.005*	<0.005	<0.005	<0.0075	<0.005	<10*	200000	<200*	<200	16000	7.11	560000
	03/30/17	8260B	<0.005*	<0.005	<0.005	<0.0075	<0.005	13	58000	<4.0*	<40*	5600	7.65	180000
	08/30/16	8260B	<0.005*	<0.01	<0.01	<0.015	<0.01	<10*	160000	<4.0*	<400*	12000	7.25	430000
	03/02/16	8260B	<0.001	<0.001	<0.001	<0.0015	<0.001	21	98000	<100*	<100	10000	7.57	240000
	09/01/15	8260B	<0.005*	<0.01	<0.01	<0.015	<0.01	20	59000	<20*	<1.0	7200	7.75	180000
	03/25/15	8260B	<0.005*	<0.01	<0.01	<0.015	<0.01	22	30000	<20*	<20	4500	7.84	110000
	11/13/14	8260B	<0.005*	<0.01	<0.01	<0.015	<0.01	22	98000	<100*	<100	12000	7.40	300000
	03/05/14	8260B	<0.01*	<0.01	<0.01	<0.015	<0.01	18	56000	<10*	8.1	7800	7.70	160000
	10/15/13	8260B	<0.01*	<0.01	<0.01	<0.015	<0.01	15	55000	<4.0*	<40*	8100	7.45	180000
	05/28/13	8260B	<0.01*	<0.01	<0.01	<0.015	<0.01	19	62000	<10*	3	8400	7.54	200000
	11/06/12	8260B	<0.01*	<0.01	<0.01	<0.015	<0.01	13	46000	<4.0*	<40*	6400	7.69	150000
	05/29/12	8260B	<0.01*	<0.01	<0.01	<0.015	<0.01	21	63000	<20*	<20	7500	7.57	160000
	11/01/11	8260B	<0.01*	<0.01	<0.01	<0.015	<0.01	20	76000	<100*	<100	9400	7.58	210000
	05/23/11	8260B	<0.01*	<0.01	<0.01	<0.015	<0.01	19	57000	<200*	<200	7100	7.57	190000
	11/16/10	8260B	<0.001	<0.001	<0.001	<0.003	<0.0015	21	76000	<200*	<200	8700	7.31	200000
	04/20/10	8260B	<0.001	<0.001	<0.001	<0.0015	<0.001	20	38000	<200*	<200	5000	7.58	120000

8.15 EVAPORATION PONDS (EP-1 thru EP-12B)

BTEX, MTBE and General Chemistry Analytical Result Summary

			PARAMETERS											
STANDARDS			Benzene (mg/L)	Toluene (mg/L)	Ethyl-benzene (mg/L)	Total Xylenes (mg/L)	MTBE (mg/L)	Fluoride (mg/L)	Chloride (mg/L)	Nitrite (mg/L)	Nitrate (mg/L)	Sulfate (mg/L)	pH	Specific Conductance (µS/cm)
WQCC 20NMAC 6.2.3103			**0.005**	**1**	**0.7**	**0.62**	**0.1**	**1.6**	**250**	**1**	**10**	**600.0**	**6 to 9**	NE
40 CFR 141.61 and 141.62 MCL			0.005	1	0.7	10	NE	4.0	NE	1	10	NE	NE	NE
NMED Tap Water (Rev 2. JUN 2019)			0.00455	1.09	0.0149	0.193	0.143	1.18	NE	1.97	31.60	NE	NE	NE
EPA RSL for Tap Water (NOV 2019)			0.0046	1.1	0.0015	0.19	0.14	0.8	NE	2	32	NE	NE	NE
POND ID	**DATE SAMPLED**	**METHOD**												
EP-11	11/21/2019[2]	--	Not sampled - dry											
	04/29/19	8260B/300.0	*<0.01**	<0.01	<0.01	<0.015	<0.01	**24**	**76000**	**52**	<2.0	**12000**	7.95	190000
	09/07/18	8260B	<0.001	<0.001	<0.001	0.001	<0.001	**41**	**170000**	*<200**	<200	**57000**	NA	NA
	02/23/18	8260B	<0.001	<0.001	<0.001	<0.0015	<0.001	**16**	**66000**	**21**	**21**	**13000**	NA	NA
	10/24/17	8260B	*<0.005**	<0.005	<0.005	<0.0075	<0.005	*<10**	**210000**	*<100**	<100	**36000**	7.61	470000
	03/30/17	8260B	*<0.005**	<0.005	<0.005	<0.0075	<0.005	**11**	**49000**	*<4.0**	*<40**	**10000**	8.02	190000
	08/30/16	8260B	*<0.01**	<0.01	<0.01	<0.015	<0.01	**16**	**93000**	*<4.0**	*<40**	**13000**	7.64	230000
	03/02/16	8260B	*<0.005**	<0.005	<0.005	<0.0075	<0.005	**29**	**50000**	*<4.0**	*<40**	**11000**	7.88	130000
	09/01/15	8260B	*<0.005**	<0.01	<0.01	<0.015	<0.01	**25**	**66000**	*<10**	<1.0	**13000**	7.76	170000
	03/25/15	8260B	*<0.005**	<0.01	<0.01	<0.015	<0.01	**34**	**38000**	*<4.0**	*<40**	**8200**	7.95	130000
	11/12/14	8260B	*<0.005**	<0.01	<0.01	<0.015	<0.01	**32**	**63000**	*<4.0**	*<40**	**17000**	7.74	180000
	03/05/14	8260B	*<0.01**	<0.01	<0.01	<0.015	<0.01	**22**	**10000**	*<10**	<1.0	**4300**	7.76	36000
	10/15/13	8260B	*<0.01**	<0.01	<0.01	<0.015	<0.01	**22**	**11000**	*<10**	<10	**4500**	7.92	81000
	05/28/13	8260B	*<0.01**	<0.01	<0.01	<0.015	<0.01	**23**	**8900**	*<10**	<1.0	**4000**	7.88	39000
	11/06/12	8260B	*<0.01**	<0.01	<0.01	<0.015	<0.01	**40**	**3500**	*<2.0**	<2.0	**1300**	8.06	18000
	05/29/12	8260B	*<0.01**	<0.01	<0.01	<0.015	<0.01	**22**	**8200**	*<4.0**	<4.0	**3700**	7.84	30000
	11/01/11	8260B	*<0.01**	<0.01	<0.01	<0.015	<0.01	**29**	**5700**	*<20**	<20	**1800**	7.83	19000
	05/23/11	8260B	*<0.01**	<0.01	<0.01	<0.015	<0.01	**23**	**16000**	*<4.0**	*<40**	**3900**	7.85	62000
	11/16/10	8260B	<0.001	<0.001	<0.001	<0.003	<0.0015	**28**	**14000**	*<4.0**	*<40**	**3300**	7.86	47000
	04/20/10	8260B	<0.001	<0.001	<0.001	<0.0015	<0.001	**18**	**17000**	*<100**	<100	**4400**	7.73	62000
EP-12A	11/21/19	8260B/300.0	*<0.005**	<0.005	<0.005	<0.0075	<0.005	**32**	**1700**	<0.5	<0.5	**2000**	7.72	12000
	4/29/2019[2]	--	Not sampled - dry											
	09/07/18	8260B	<0.001	<0.001	<0.001	<0.0015	<0.001	**27**	**30000**	*<20**	<20	**7600**	NA	NA
	02/23/18	8260B	<0.001	<0.001	<0.001	<0.0015	<0.001	**27**	**5400**	**1.1**	<0.5	**1600**	NA	NA
	10/24/17	8260B	*<0.005**	<0.005	<0.005	<0.0075	<0.005	**27**	**1500**	*<10**	<1.0	520	7.76	54000
	03/30/17	8260B	*<0.005**	<0.005	<0.005	<0.0075	<0.005	**21**	**4900**	*<2.0**	<0.50	**1600**	7.91	26000
	08/30/16	8260B	*<0.01**	<0.01	<0.01	<0.015	<0.01	**18**	**5800**	*<2.0**	<0.5	**3100**	7.79	21000
	03/02/16	8260B	*<0.005**	<0.005	<0.005	<0.0075	<0.005	**24**	**6500**	*<10**	<1.0	**1600**	7.95	23000
	09/01/15	8260B	*<0.005**	<0.01	<0.01	<0.015	<0.01	**31**	**4900**	*<10**	<1.0	**1700**	8.31	20000
	03/25/15	8260B	*<0.005**	<0.01	<0.01	<0.015	<0.01	**20**	**2500**	*<2.0**	<2.0	**1000**	8.02	13000
	11/12/14	8260B	*<0.01**	<0.01	<0.01	<0.015	<0.01	**43**	**3000**	**2.5**	2.5	**1600**	8.24	12000
	03/05/14	8260B	*<0.01**	<0.01	<0.01	<0.015	<0.01	**34**	**1800**	*<1.0**	<1.0	**1100**	7.90	8000
	10/15/13	8260B	*<0.01**	<0.01	<0.01	<0.015	<0.01	**43**	**1900**	*<2.0**	<2.0	**1300**	8.20	8600
	05/28/13	8260B	*<0.01**	<0.01	<0.01	<0.015	<0.01	**29**	**3800**	*<1.0**	<1.0	**1700**	7.98	17000
	11/06/12	8260B	*<0.01**	<0.01	<0.01	<0.015	<0.01	**35**	**4000**	*<2.0**	<2.0	**1400**	8.09	19000
	05/29/12	8260B	*<0.01**	<0.01	<0.01	<0.015	<0.01	**23**	**7600**	*<4.0**	<4.0	**2300**	7.88	25000
	11/01/11	8260B	*<0.01**	<0.01	<0.01	<0.015	<0.01	**36**	**5400**	*<20**	<20	**1500**	8.05	18000
	05/23/11	8260B	*<0.01**	<0.01	<0.01	<0.015	<0.01	**28**	**6400**	*<5.0**	<1.0	**1400**	8.08	26000
	11/16/10	8260B	<0.001	<0.001	<0.001	<0.003	<0.0015	**21**	**11000**	*<4.0**	*<40**	**3100**	8.07	39000
	04/20/10	8260B	<0.001	<0.001	<0.001	<0.0015	<0.001	**29**	**6400**	*<20**	<20	**1300**	7.89	20000
EP-12B	11/21/19	8260B/300.0	0.0012	<0.005	<0.005	<0.0075	<0.005	**31**	**980**	<0.5	<0.5	**1700**	7.64	8500
	04/29/19	8260B/300.0	*<0.01**	<0.01	<0.01	<0.015	<0.01	**28**	**7200**	**5.5**	<0.5	**2800**	8.63	29000
	09/07/18	8260B	*<0.01**	<0.01	<0.01	<0.015	<0.01	**36**	**3800**	*<20**	<20	**1400**	NA	NA
	02/22/18	8260B	0.0014	0.0022	0.00034	0.0021	<0.001	**20**	**2700**	*<2.0**	<0.5	**900**	NA	NA
	10/24/17	8260B	*<0.005**	<0.005	<0.005	<0.0075	<0.005	**34**	**4000**	*<10**	<1.0	**1200**	7.44	17000
	03/30/17	8260B	**0.0068**	0.012	0.0042	0.013	<0.005	**20**	**4300**	*<2.0**	<0.5	**1400**	7.78	20000
	08/30/16	8260B	0.0035	0.0024	0.0012	<0.015	<0.01	**21**	**2600**	*<2.0**	<0.5	**1600**	7.82	15000
	03/02/16	8260B	0.0012	0.0017	<0.005	<0.0075	<0.005	**34**	**4200**	*<10**	<10	**1200**	7.86	18000
	09/01/15	8260B	**0.0099**	0.021	<0.01	<0.015	<0.01	**51**	**3200**	*<10**	<1.0	**900**	7.96	15000
	03/25/15	8260B	*<0.005**	<0.01	<0.01	<0.015	<0.01	**11**	**2800**	*<2.0**	<2.0	**980**	7.96	13000
	11/12/14	8260B	*<0.01**	<0.01	<0.01	<0.015	<0.01	**38**	**1900**	*<2.0**	<2.0	**1200**	7.84	7600
	03/05/14	8260B	*<0.01**	<0.01	<0.01	<0.015	<0.01	**38**	**1800**	*<1.0**	<1.0	**710**	7.97	7800
	10/15/13	8260B	*<0.01**	<0.01	<0.01	<0.015	<0.01	**14**	**1300**	*<2.0**	<2.0	**770**	8.43	6800
	05/28/13	8260B	*<0.01**	<0.01	<0.01	<0.015	<0.01	**32**	**3100**	*<1.0**	<1.0	**1500**	7.93	14000
	11/06/12	8260B	*<0.01**	<0.01	<0.01	<0.015	<0.01	**71**	**1900**	*<2.0**	<2.0	**1100**	7.91	12000
	05/29/12	8260B	*<0.01**	<0.01	<0.01	<0.015	<0.01	**19**	**7000**	*<4.0**	<10	**1500**	7.75	25000
	11/01/11	8260B	*<0.01**	<0.01	<0.01	<0.015	<0.01	**39**	**3600**	*<20**	<20	**1500**	8.12	18000
	05/23/11	8260B	*<0.01**	<0.01	<0.01	<0.015	<0.01	**37**	**4800**	*<5.0**	<1.0	**1100**	8.07	22000
	11/16/10	8260B	<0.001	<0.001	<0.001	<0.003	<0.0015	**22**	**6100**	*<20**	<20	**1700**	7.74	22000
	04/20/10	8260B	<0.001	<0.001	<0.001	<0.0015	<0.001	**80**	**5000**	*<5.0**	<5.0	**950**	8.06	9400

DEFINITIONS

NE = Not established

NA = Not analyzed

Bold and highlighted values represent values above the applicable standards

STANDARDS

WQCC 20 NMAC 6.2.3103 - Standards for Ground Water of 10,000 mg/l TDS Concentration or Less.

a) Human Health Standards; b) Other Standards for Domestic Water

40 CFR 141.61 Maximum Contaminant Levels for Organic Contaminants

40 CFR 141.62 Maximum Contaminant Levels for Inorganic Contaminants

NMED Risk Assessment Guidance for Investigations and Remediations Table A-1

EPA Regional Screening Level (RSL) Summary Table

NOTES

Ponds marked in red were not sampled because the pond was dry

Items notes with a * and italics have a detection limit greater than or equal to the applicable standard.

Items highlighted were analyzed by nitrogen, nitrate & nitrite and the result is reported for both.

1) Pond 6 is combined with ponds 4 and 5 as one pond.

2) Pond was not sampled - dry.

8.15.1 EVAPORATION PONDS (EP-1 thru EP-12B)

BOD/COD/E-COLI Analytical Result Summary

STANDARDS			PARAMETERS			
			BOD (mg/L)	COD (mg/L)	E-Coli (CFU/100ml)	Total Coliform (CFU/100ml)
WQCC 20NMAC 6.2.3103 (DECEMBER 2018)			<30[1]	<125[1]	< 500 organisms per 100 ml	
40 CFR 141.61 and 141.62 MCL			NE	NE	NE	NE
NMED Tap Water (Rev 2. JUN 2019)			NE	NE		
EPA RSL for Tap Water (NOV 2019)			NE	NE	MCL[6]	
POND ID	DATE SAMPLED	METHOD				
EP-1			*Not sampled - no longer in service*			
	11/12/14	SM5210B/E410.4/SM9223B	**240**	**1700**	ND	
	03/05/14	SM5210B/E410.4/SM9223B	**55**	**560**	<10	
	10/16/13	SM5210B/E410.4/SM9223B	<33.3	**560**	20	NL
	05/29/13	SM5210B/E410.4/SM9223B	**75**	**310**	10	NL
	11/07/12	SM5210B/E410.4/SM9223B	**520**	**1100**	**10462**	NL
	05/30/12	SM5210B/E410.4/SM9223B	**340**	**990**	**<24196**	NL
	11/02/11	SM5210B/9223B	**960**	**2250**	**<2419.6**	NL
	05/24/11	SM5210B/9223B	**440**	**1340**	**1986.3**	NL
	11/17/10	SM9223B/3014	**1400**	**3200**	<10	NL
	08/2-3/10	SM5210B/E410.4/3014	**290**	**346**	**<2419.6**	NL
	04/21/10	SM5210B/E410.4/3014	**1080**	**2210**	**<2419.6**	**<2419.6**

8.15.1 EVAPORATION PONDS (EP-1 thru EP-12B)

BOD/COD/E-COLI Analytical Result Summary

STANDARDS			PARAMETERS			
			BOD (mg/L)	COD (mg/L)	E-Coli (CFU/100ml)	Total Coliform (CFU/100ml)
WQCC 20NMAC 6.2.3103 (DECEMBER 2018)			<30[1]	<125[1]	< 500 organisms per 100 ml	
40 CFR 141.61 and 141.62 MCL			NE	NE	NE	NE
NMED Tap Water (Rev 2. JUN 2019)			NE	NE		
EPA RSL for Tap Water (NOV 2019)			NE	NE	MCL[6]	
POND ID	DATE SAMPLED	METHOD				
EP-2	11/21/19	SM5210B/E410.4/SM9223B	1649	22990	<24196	
	04/30/19	SM5210B/E410.4/SM9223B	515	738	<24196	
	09/14/18	SM5210B/E410.4/SM9223B	180	373	12997	
	03/01/18	SM5210B/E410.4/SM9223B	450	787	<24196	
	10/24/17	SM5210B/E410.4/SM9223B	410	770	<24196	NL
	03/30/17	SM5210B/E410.4/SM9223B	410	1030	<24196	NL
	08/29/16	SM5210B/E410.4/SM9223B	220	694	<24196	
	03/08/16	SM5210B/E410.4/SM9223B	<413.04	977	<2419.6	<2419.6
	09/02/15	SM5210B/E410.4/SM9223B	460	775	5475	
	03/26/15	SM5210B/E410.4/SM9223B	330	610	<24196	
	11/12/14	SM5210B/E410.4/SM9223B	170	580	<24196	
	03/05/14	SM5210B/E410.4/SM9223B	450	1000	<2419.6	
	10/16/13	SM5210B/E410.4/SM9223B	420	1100	3282	NL
	05/29/13	SM5210B/E410.4/SM9223B	210	700	31	NL
	11/07/12	SM5210B/E410.4/SM9223B	750	1300	<10	NL
	05/30/12	SM5210B/E410.4/SM9223B	100	860	4106	
	11/02/11	SM5210B/9223B	530	1560	<2419.6	NL
	05/24/11	SM5210B/9223B	230	737	648.8	NL
	11/17/10	SM9223B/3014	550	1020	1553.1	NL
	08/2-3/10	SM5210B/E410.4/3014	64	172	<2419.6	NL
	04/21/10	SM5210B/E410.4/3014	1100	2060	<2419.6	<2419.6

8.15.1 EVAPORATION PONDS (EP-1 thru EP-12B)

BOD/COD/E-COLI Analytical Result Summary

STANDARDS			PARAMETERS			
			BOD (mg/L)	COD (mg/L)	E-Coli (CFU/100ml)	Total Coliform (CFU/100ml)
WQCC 20NMAC 6.2.3103 (DECEMBER 2018)			<30[1]	<125[1]	< 500 organisms per 100 ml	
40 CFR 141.61 and 141.62 MCL			NE	NE	NE	NE
NMED Tap Water (Rev 2. JUN 2019)			NE	NE		
EPA RSL for Tap Water (NOV 2019)			NE	NE	MCL[6]	
POND ID	DATE SAMPLED	METHOD				
EP-3	11/20/19	SM5210B/E410.4/SM9223B	300	731	<24196	
	04/30/19	SM5210B/E410.4/SM9223B	158	683	19863	
	09/14/18	SM5210B/E410.4/SM9223B	120	340	1354	
	03/01/18	SM5210B/E410.4/SM9223B	260	611	2987	
	10/24/17	SM5210B/E410.4/SM9223B	300	800	<24196	NL
	03/30/17	SM5210B/E410.4/SM9223B	280	717	<24196	NL
	08/29/16	SM5210B/E410.4/SM9223B	110	746	<24196	
	03/08/16	SM5210B/E410.4/SM9223B	240	627	1732.9	<2419.6
	09/02/15	SM5210B/E410.4/SM9223B	120	725	1076	
	03/26/15	SM5210B/E410.4/SM9223B	230	977	24196	
	11/12/14	SM5210B/E410.4/SM9223B	120	590	408	
	03/05/14	SM5210B/E410.4/SM9223B	440	990	122	
	10/16/13	SM5210B/E410.4/SM9223B	320	870	121	NL
	05/29/13	SM5210B/E410.4/SM9223B	120	1600	<10	NL
	11/07/12	SM5210B/E410.4/SM9223B	390	900	10	NL
	05/30/12	SM5210B/E410.4/SM9223B	69	980	10	NL
	11/02/11	SM5210B/9223B	140	608	<2419.6	NL
	05/24/11	SM5210B/9223B	190	574	1	NL
	11/17/10	SM9223B/3014	120	560	40.8	NL
	08/2-3/10	SM5210B/E410.4/3014	36	238	<2419.6	NL
	04/21/10	SM5210B/E410.4/3014	200	771	100.6	<2419.6

8.15.1 EVAPORATION PONDS (EP-1 thru EP-12B)

BOD/COD/E-COLI Analytical Result Summary

STANDARDS			PARAMETERS			
			BOD (mg/L)	COD (mg/L)	E-Coli (CFU/100ml)	Total Coliform (CFU/100ml)
WQCC 20NMAC 6.2.3103 (DECEMBER 2018)			<30[1]	<125[1]	< 500 organisms per 100 ml	
40 CFR 141.61 and 141.62 MCL			NE	NE	NE	NE
NMED Tap Water (Rev 2. JUN 2019)			NE	NE		
EPA RSL for Tap Water (NOV 2019)			NE	NE	MCL[6]	
POND ID	DATE SAMPLED	METHOD				
EP-4	11/20/19 [1]		EP-4, EP-5, and EP-6 combined into one sample (see EP-6)			
	04/30/19	SM5210B/E410.4/SM9223B	264	800	<24196	
	09/14/18	SM5210B/E410.4/SM9223B	85	324	71	
	03/01/18	SM5210B/E410.4/SM9223B	160	106	402	
	10/24/17	SM5210B/E410.4/SM9223B	280	990	<24196	NL
	03/30/17	SM5210B/E410.4/SM9223B	390	802	<24196	NL
	08/29/16	SM5210B/E410.4/SM9223B	<64.88	872	6131	
	03/08/16	SM5210B/E410.4/SM9223B	190	569	36.3	2419.6
	09/02/15	SM5210B/E410.4/SM9223B	110	909	880	
	03/26/15	SM5210B/E410.4/SM9223B	110	730	5475	
	11/12/14	SM5210B/E410.4/SM9223B	120	670	63	
	03/05/14	SM5210B/E410.4/SM9223B	500	1000	1	
	10/16/13	SM5210B/E410.4/SM9223B	270	840	31	NL
	05/29/13	SM5210B/E410.4/SM9223B	96	700	<10	NL
	11/07/12	SM5210B/E410.4/SM9223B	230	880	<10	NL
	05/30/12	SM5210B/E410.4/SM9223B	59	680	<10	NL
	11/02/11	SM5210B/9223B	62	478	547.5	NL
	05/24/11	SM5210B/9223B	190	639	4.1	NL
	11/17/20	SM9223B/3014	140	440	12	NL
	08/2-3/10	SM5210B/E410.4/3014	35	204	<2419.6	NL
	04/21/10	SM5210B/E410.4/3014	281	683	<1.0	<2419.6

8.15.1 EVAPORATION PONDS (EP-1 thru EP-12B)

BOD/COD/E-COLI Analytical Result Summary

STANDARDS			PARAMETERS			
			BOD (mg/L)	COD (mg/L)	E-Coli (CFU/100ml)	Total Coliform (CFU/100ml)
WQCC 20NMAC 6.2.3103 (DECEMBER 2018)			<30[1]	<125[1]	< 500 organisms per 100 ml	
40 CFR 141.61 and 141.62 MCL			NE	NE	NE	NE
NMED Tap Water (Rev 2. JUN 2019)			NE	NE		
EPA RSL for Tap Water (NOV 2019)			NE	NE	MCL[6]	
POND ID	DATE SAMPLED	METHOD				
EP-5	11/20/19 [1]		EP-4, EP-5, and EP-6 combined into one sample (see EP-6)			
	04/30/19	SM5210B/E410.4/SM9223B	**97**	**618**	109	
	09/14/18	SM5210B/E410.4/SM9223B	23	**928**	10	
	03/01/18	SM5210B/E410.4/SM9223B	**<171.3**	**849**	2	
	10/24/17	SM5210B/E410.4/SM9223B	<2	**820**	52	NL
	03/30/17	SM5210B/E410.4/SM9223B	**32**	**990**	52	NL
	08/29/16	SM5210B/E410.4/SM9223B	19	**861**	31	
	03/08/16	SM5210B/E410.4/SM9223B	**63**	**537**	1	613.1
	09/02/15	SM5210B/E410.4/SM9223B	17	**979**	**1515**	
	03/26/15	SM5210B/E410.4/SM9223B	**47**	**860**	135	
	11/12/14	SM5210B/E410.4/SM9223B	<20.55	**660**	<1	
	03/05/14	SM5210B/E410.4/SM9223B	**<69.15**	**1000**	<1	
	10/16/13	SM5210B/E410.4/SM9223B	**220**	**720**	31	NL
	05/29/13	SM5210B/E410.4/SM9223B	**66**	**600**	<10	NL
	11/07/12	SM5210B/E410.4/SM9223B	**150**	**1000**	<10	NL
	05/30/12	SM5210B/E410.4/SM9223B	**35**	**760**	10	NL
	11/02/11	SM5210B/9223B	29	**302**	5.2	NL
	05/24/11	SM5210B/9223B	**150**	**413**	1	NL
	11/17/10	SM9223B/3014	**76**	**320**	4.1	NL
	08/2-3/10	SM5210B/E410.4/3014	**40**	**208**	**1960.8**	NL
	04/21/10	SM5210B/E410.4/3014	**123**	**782**	2	**<2419.6**

8.15.1 EVAPORATION PONDS (EP-1 thru EP-12B)

BOD/COD/E-COLI Analytical Result Summary

STANDARDS			PARAMETERS			
			BOD (mg/L)	COD (mg/L)	E-Coli (CFU/100ml)	Total Coliform (CFU/100ml)
WQCC 20NMAC 6.2.3103 (DECEMBER 2018)			<30[1]	<125[1]	< 500 organisms per 100 ml	
40 CFR 141.61 and 141.62 MCL			NE	NE	NE	NE
NMED Tap Water (Rev 2. JUN 2019)			NE	NE		
EPA RSL for Tap Water (NOV 2019)			NE	NE	MCL[6]	
POND ID	DATE SAMPLED	METHOD				
EP-6	11/20/19 [1]	SM5210B/E410.4/SM9223B	12	**214**	183	
	04/29/19	SM5210B/E410.4/SM9223B	**54**	**393**	20	
	09/14/18	SM5210B/E410.4/SM9223B	14	**549**	10	
	03/01/18	SM5210B/E410.4/SM9223B	**150**	**591**	109	
	10/24/17	SM5210B/E410.4/SM9223B	**100**	**640**	63	NL
	03/30/17	SM5210B/E410.4/SM9223B	**30**	**981**	10	NL
	08/29/16	SM5210B/E410.4/SM9223B	14	**746**	10	
	03/02/16	SM5210B/E410.4/SM9223B	**77**	**574**	10	
	09/02/15	SM5210B/E410.4/SM9223B	8	**1700**	341	
	03/26/15	SM5210B/E410.4/SM9223B	**47**	**978**	63	
	11/12/14	SM5210B/E410.4/SM9223B	<15.30	**810**	<1	
	03/05/14	SM5210B/E410.4/SM9223B	**<171.97**	**600**	<10	NL
	10/16/13	SM5210B/E410.4/SM9223B	<25.5	**940**	<10	NL
	05/29/13	SM5210B/E410.4/SM9223B	**46**	**710**	<10	NL
	11/07/12	SM5210B/E410.4/SM9223B	10	**1000**	<1.0	NL
	05/30/12	SM5210B/E410.4/SM9223B	18	**710**	<1.0	NL
	11/02/11	SM5210B/9223B	7.3	**252**	47.3	NL
	05/24/11	SM5210B/9223B	**71**	**473**	<1.0	NL
	11/17/10	SM9223B/3014	<1200	**168**	8.6	NL
	08/2-3/10	SM5210B/E410.4	15	**172**	**1892**	NL
	04/21/10	SM5210B/E410.5	**54.8**	**290**	1	**<2419.6**

8.15.1 EVAPORATION PONDS (EP-1 thru EP-12B)

BOD/COD/E-COLI Analytical Result Summary

STANDARDS			PARAMETERS			
			BOD (mg/L)	COD (mg/L)	E-Coli (CFU/100ml)	Total Coliform (CFU/100ml)
WQCC 20NMAC 6.2.3103 (DECEMBER 2018)			<30[1]	<125[1]	< 500 organisms per 100 ml	
40 CFR 141.61 and 141.62 MCL			NE	NE	NE	NE
NMED Tap Water (Rev 2. JUN 2019)			NE	NE		
EPA RSL for Tap Water (NOV 2019)			NE	NE	MCL[6]	
POND ID	DATE SAMPLED	METHOD				
EP-7	11/20/19	SM5210B/E410.4/SM9223B	15	**5040**	<10	
	04/29/19	SM5210B/E410.4/SM9223B	15	**2370**	<10	
	09/14/18	SM5210B/E410.4/SM9223B	**46**	**4690**	<10	
	03/01/18	SM5210B/E410.4/SM9223B	27	**3530**	<10	
	10/24/17	SM5210B/E410.4/SM9223B	NA	NA	NA	NL
	03/30/17	SM5210B/E410.4/SM9223B	18	**3150**	<1	NL
	08/30/16	SM5210B/E410.4/SM9223B	4	**3140**	<1	
	03/08/16	SM5210B/E410.4/SM9223B	**41**	**820**	<1	3.1
	09/02/15	SM5210B/E410.4/SM9223B	21	**1960**	<10	
	03/26/15	SM5210B/E410.4/SM9223B	11	**658**	<10	
	11/12/14	SM5210B/E410.4/SM9223B	28	**4400**	20	
	03/05/14	SM5210B/E410.4/SM9223B	11	**3900**	<1.0	
	10/16/13	SM5210B/E410.4/SM9223B	**37**	**3200**	<10	NL
	05/29/13	SM5210B/E410.4/SM9223B	19	**6000**	<10	NL
	11/07/12	SM5210B/E410.4/SM9223B	21	**2300**	<1.0	NL
	05/30/12	SM5210B/E410.4/SM9223B	15	**3200**	<1.0	NL
	11/02/11	SM5210B/9223B	15	**1240**	<1.0	NL
	05/24/11	SM5210B/9223B	27	**918**	<1.0	NL
	11/17/10	SM9223B/3014	**380**	**920**	<1.0	NL
	08/2-3/10	SM5210B/E410.4/3014	5	**870**	<1.0	NL
	04/21/10	SM5210B/E410.4/3014	<60.0	**1010**	<1.0	96

8.15.1 EVAPORATION PONDS (EP-1 thru EP-12B)

BOD/COD/E-COLI Analytical Result Summary

STANDARDS			PARAMETERS			
			BOD (mg/L)	COD (mg/L)	E-Coli (CFU/100ml)	Total Coliform (CFU/100ml)
WQCC 20NMAC 6.2.3103 (DECEMBER 2018)			<30[1]	<125[1]	< 500 organisms per 100 ml	
40 CFR 141.61 and 141.62 MCL			NE	NE	NE	NE
NMED Tap Water (Rev 2. JUN 2019)			NE	NE		
EPA RSL for Tap Water (NOV 2019)			NE	NE	MCL[6]	
POND ID	DATE SAMPLED	METHOD				
EP-8	11/20/19	SM5210B/E410.4/SM9223B	28	**5170**	<10	
	04/29/19	SM5210B/E410.4/SM9223B	20	**1850**	<10	
	09/14/18	SM5210B/E410.4/SM9223B	17	**2310**	<10	
	03/01/18	SM5210B/E410.4/SM9223B	29	**4040**	<10	
	10/24/17	SM5210B/E410.4/SM9223B	23	**2100**	<10	NL
	03/30/17	SM5210B/E410.4/SM9223B	18	**5430**	<10	NL
	08/30/16	SM5210B/E410.4/SM9223B	6	**3180**	<1	
	09/02/15	SM5210B/E410.4/SM9223B	**32**	**880**	10	
	03/26/15	SM5210B/E410.4/SM9223B	12	**600**	<1	
	11/12/14	SM5210B/E410.4/SM9223B	27	**4100**	10	
	03/05/14	SM5210B/E410.4/SM9223B	13	**2900**	<1.0	
	10/16/13	SM5210B/E410.4/SM9223B	6.8	**9800**	<10	NL
	05/29/13	SM5210B/E410.4/SM9223B	22	**4600**	<10	NL
	11/07/12	SM5210B/E410.4/SM9223B	10	**13000**	<10	NL
	05/30/12	SM5210B/E410.4/SM9223B	4.5	**3800**	<1.0	NL
	11/02/11	SM5210B/9223B	9	**512**	32.3	NL
	05/24/11	SM5210B/9223B	**46**	**3140**	<1.0	NL
	11/17/10	SM9223B/3014	**400**	**1720**	<1.0	NL
	08/2-3/10	SM5210B/E410.4/3014	5	**2520**	<1.0	<1
	04/21/10	SM5210B/E410.4/3014	14.3	**776**	<1.0	2

8.15.1 EVAPORATION PONDS (EP-1 thru EP-12B)
BOD/COD/E-COLI Analytical Result Summary

STANDARDS			PARAMETERS			
			BOD (mg/L)	COD (mg/L)	E-Coli (CFU/100ml)	Total Coliform (CFU/100ml)
WQCC 20NMAC 6.2.3103 (DECEMBER 2018)			<30[1]	<125[1]	< 500 organisms per 100 ml	
40 CFR 141.61 and 141.62 MCL			NE	NE	NE	NE
NMED Tap Water (Rev 2. JUN 2019)			NE	NE		
EPA RSL for Tap Water (NOV 2019)			NE	NE	MCL[6]	
POND ID	DATE SAMPLED	METHOD				
EP-9	11/20/19	SM5210B/E410.4/SM9223B	15	**2230**	<10	
	04/29/19	SM5210B/E410.4/SM9223B	**90**	**1630**	<10	
	09/14/18	SM5210B/E410.4/SM9223B	**30**	**2160**	<10	
	03/01/18	SM5210B/E410.4/SM9223B	26	**1510**	<10	
	10/24/17	SM5210B/E410.4/SM9223B	20	**5000**	<10	NL
	03/30/17	SM5210B/E410.4/SM9223B	**30**	**5590**	<1	NL
	08/30/16	SM5210B/E410.4/SM9223B	**37**	**5420**	<1	
	03/02/16	SM5210B/E410.4/SM9223B	<2.99	**2720**	<1	
	09/02/15	SM5210B/E410.4/SM9223B	20	**1480**	74	
	03/26/15	SM5210B/E410.4/SM9223B	11	**509**	<10	
	11/13/14	SM5210B/E410.4/SM9223B	4.2	**3900**	<1	
	03/05/14	SM5210B/E410.4/SM9223B	15	**1000**	<1	
	10/16/13	SM5210B/E410.4/SM9223B	<12.3	**4700**	<10	NL
	05/29/13	SM5210B/E410.4/SM9223B	19	**7400**	<10	NL
	11/07/12	SM5210B/E410.4/SM9223B	7.9	**1400**	<1.0	NL
	05/30/12	SM5210B/E410.4/SM9223B	23	**2800**	<1.0	NL
	11/02/11	SM5210B/9223B	9	**1870**	<1.0	NL
	05/24/11	SM5210B/9223B	**43**	**1640**	<1.0	NL
	11/17/10	SM9223B/3014	**350**	**1240**	<1.0	NL
	04/21/10	SM5210B/E410.4/3014	<60.0	**760**	<1.0	85.5

8.15.1 EVAPORATION PONDS (EP-1 thru EP-12B)

BOD/COD/E-COLI Analytical Result Summary

STANDARDS			PARAMETERS			
			BOD (mg/L)	COD (mg/L)	E-Coli (CFU/100ml)	Total Coliform (CFU/100ml)
WQCC 20NMAC 6.2.3103 (DECEMBER 2018)			<30[1]	<125[1]	< 500 organisms per 100 ml	
40 CFR 141.61 and 141.62 MCL			NE	NE	NE	NE
NMED Tap Water (Rev 2. JUN 2019)			NE	NE		
EPA RSL for Tap Water (NOV 2019)			NE	NE	MCL[6]	
POND ID	DATE SAMPLED	METHOD				
EP-11	11/21/2019[2]	--	Not sampled - dry			
	04/29/19	SM5210B/E410.4/SM9223B	17	**2160**	<10	
	09/14/18	SM5210B/E410.4/SM9223B	**<199.62**	**14200**	<10	
	03/01/18	SM5210B/E410.4/SM9223B	**44**	**3290**	<10	
	10/24/17	SM5210B/E410.4/SM9223B	4	**2260**	<1	
	03/30/17	SM5210B/E410.4/SM9223B	21	**4120**	<1	<1
	08/30/16	SM5210B/E410.4/SM9223B	4	**2260**	<1	
	03/08/16	SM5210B/E410.4/SM9223B	18	**210**	<1	<1
	09/02/15	SM5210B/E410.4/SM9223B	**30**	**1120**	10	
	03/26/15	SM5210B/E410.4/SM9223B	16	**692**	10	
	11/12/14	SM5210B/E410.4/SM9223B	**89**	**4700**	<10	
	03/05/14	SM5210B/E410.4/SM9223B	**48**	**570**	<10	
	10/16/13	SM5210B/E410.4/SM9223B	**190**	**530**	20	NL
	05/29/13	SM5210B/E410.4/SM9223B	**30**	**610**	<10	NL
	11/07/12	SM5210B/E410.4/SM9223B	**130**	**620**	<10	NL
	05/30/12	SM5210B/E410.4/SM9223B	20	**890**	<10	NL
	11/02/11	SM5210B/9223B	**40**	**486**	461.1	NL
	05/24/11	SM5210B/9223B	**52**	**711**	<1.0	NL
	11/17/10	SM9223B/3014	**350**	**460**	4.1	NL
	04/21/10	SM5210B/E410.4/3014	<60.0	**492**	<1.0	71.9

8.15.1 EVAPORATION PONDS (EP-1 thru EP-12B)

BOD/COD/E-COLI Analytical Result Summary

STANDARDS			PARAMETERS			
			BOD (mg/L)	COD (mg/L)	E-Coli (CFU/100ml)	Total Coliform (CFU/100ml)
WQCC 20NMAC 6.2.3103 (DECEMBER 2018)			<30[1]	<125[1]	< 500 organisms per 100 ml	
40 CFR 141.61 and 141.62 MCL			NE	NE	NE	NE
NMED Tap Water (Rev 2. JUN 2019)			NE	NE		
EPA RSL for Tap Water (NOV 2019)			NE	NE	MCL[6]	
POND ID	DATE SAMPLED	METHOD				
EP-12A	11/21/19	SM5210B/E410.4/SM9223B	116	237	15531	
	4/29/2019[2]	--	Not sampled - dry			
	03/01/18	SM5210B/E410.4/SM9223B	86	504	<10	
	10/24/17	SM5210B/E410.4/SM9223B	270	1100	10	NL
	03/30/17	SM5210B/E410.4/SM9223B	59	721	10	NL
	08/30/16	SM5210B/E410.4/SM9223B	<39.64	618	2723	
	03/08/16	SM5210B/E410.4/SM9223B	130	867	21.6	980.4
	09/02/15	SM5210B/E410.4/SM9223B	150	755	8164	
	03/26/15	SM5210B/E410.4/SM9223B	170	403	12033	
	11/12/14	SM5210B/E410.4/SM9223B	<37.50	450	131	
	03/05/14	SM5210B/E410.4/SM9223B	210	560	<10	
	10/16/13	SM5210B/E410.4/SM9223B	270	930	41	NL
	05/29/13	SM5210B/E410.4/SM9223B	100	1400	<10	NL
	11/07/12	SM5210B/E410.4/SM9223B	150	650	<10	NL
	05/29/12	SM5210B/E410.4/SM9223B	22	660	<10	NL
	11/02/11	SM5210B/9223B	85	515	<2419.6	NL
	05/24/11	SM5210B/9223B	130	582	1	NL
	11/17/10	SM9223B/3014	330	300	64.4	NL
	04/21/10	SM5210B/E410.4/3014	87.3	675	47.6	<2419.6

8.15.1 EVAPORATION PONDS (EP-1 thru EP-12B)
BOD/COD/E-COLI Analytical Result Summary

STANDARDS			PARAMETERS			
			BOD (mg/L)	COD (mg/L)	E-Coli (CFU/100ml)	Total Coliform (CFU/100ml)
WQCC 20NMAC 6.2.3103 (DECEMBER 2018)			<30[1]	<125[1]	< 500 organisms per 100 ml	
40 CFR 141.61 and 141.62 MCL			NE	NE	NE	NE
NMED Tap Water (Rev 2. JUN 2019)			NE	NE		
EPA RSL for Tap Water (NOV 2019)			NE	NE	MCL[6]	
POND ID	DATE SAMPLED	METHOD				
EP-12B	11/21/19	SM5210B/E410.4/SM9223B	**292**	**448**	**<24196**	
	04/29/19	SM5210B/E410.4/SM9223B	**38**	**2160**	<10	
	09/14/18	SM5210B/E410.4/SM9223B	<35.2	**599**	120	
	03/01/18	SM5210B/E410.4/SM9223B	**280**	**678**	**12997**	
	10/24/17	SM5210B/E410.4/SM9223B	**370**	**780**	**24200**	NL
	03/30/17	SM5210B/E410.4/SM9223B	**260**	**694**	**<24196**	NL
	08/30/16	SM5210B/E410.4/SM9223B	**240**	**770**	**<24196**	
	03/08/16	SM5210B/E410.4/SM9223B	**240**	**806**	**770.1**	<2419.6
	09/02/15	SM5210B/E410.4/SM9223B	**300**	**657**	**3873**	
	03/26/15	SM5210B/E410.4/SM9223B	**270**	**647**	**17329**	
	11/12/14	SM5210B/E410.4/SM9223B	**110**	**410**	**1012**	
	03/05/14	SM5210B/E410.4/SM9223B	**430**	**810**	<10	
	10/16/13	SM5210B/E410.4/SM9223B	**460**	**940**	231	NL
	05/29/13	SM5210B/E410.4/SM9223B	**260**	**770**	31	NL
	11/07/12	SM5210B/E410.4/SM9223B	**310**	**850**	<10	NL
	05/30/12	SM5210B/E410.4/SM9223B	**37**	**920**	<10	NL
	11/02/11	SM5210B/9223B	**130**	**618**	**<2419.6**	NL
	05/24/11	SM5210B/9223B	**170**	**450**	3	NL
	11/17/10	SM9223B/3014	**350**	**280**	12	NL
	04/21/10	SM5210B/E410.4/3014	**342**	**1070**	**1540.2**	<2419.6

DEFINITIONS
NE = Not established
NA = Not analyzed
Bold and highlighted values represent values above the applicable standards
STANDARDS
WQCC 20 NMAC 6.2.3103 - Standards for Ground Water of 10,000 mg/l TDS Concentration or Less.
a) Human Health Standards; b) Other Standards for Domestic Water
40 CFR 141.62 Detection Limits for Inorganic Contaminants
NMED Risk Assessment Guidance for Investigations and Remediations Table A-1
EPA Regional Screening Level (RSL) Summary Table
NOTES
Ponds marked in red were not sampled because the pond was dry
1) Pond 6 is combined with ponds 4 and 5 as one pond.

8.15.2 EVAPORATION PONDS (EP-1 thru EP-12B)
Total Metals Analytical Result Summary

			PARAMETERS												
STANDARDS			Arsenic (mg/L)	Barium (mg/L)	Cadmium (mg/L)	Chromium (mg/L)	Copper (mg/L)	Iron (mg/L)	Lead (mg/L)	Manganese (mg/L)	Selenium (mg/L)	Silver (mg/L)	Mercury (ug/L)	Uranium (mg/L)	Zinc (mg/L)
WQCC 20 NMAC 6.2.3103 (DEC 2018)			**0.01**	**2**	**0.01**	**0.05**	**1**	**1**	**0.015**	**0.2**	**0.05**	**0.05**	**2**	**0.03**	**10**
40 CFR 141.62 MCL			0.01	2.0	0.005	0.1	1.3	NE	0.015	NE	0.05	NE	2	0.03	NE
NMED Tap Water (Rev 2. JUN 2019)			0.000855	3.28	0.00624	0.0057	0.7898	13.8	NE	2.02	0.0987	0.0812	0.626	0.0592	5.96
EPA RSL for Tap Water (NOV 2019)			0.000052	3.8	0.0092	22	0.8	14	0.015	0.43	0.1	0.094	0.63	0.004	6
POND ID	DATE SAMPLED	METHOD													
EP-1			*Not sampled - no longer in service*												
	11/12/14	200.7/200.8	**0.047**	0.13	<0.002	0.048	<0.006	2.2	<0.005	**0.68**	0.017		0.32	<0.005	0.059
	03/05/14	200.7/200.8	**0.013**	0.12	<0.002	0.018	<0.006	0.86	<0.001	**0.51**	<0.01		<0.2	<0.001	0.028
	10/15/13	200.7/200.8	**0.011**	0.1	<0.002	0.018	<0.006	0.56	<0.01	**0.46**	<0.01		<0.2	<0.01	0.025
	05/28/13	200.7/200.8	0.0062	0.057	<0.002	0.0099	<0.006	0.4	<0.005	**0.39**	0.0077		<0.2	0.0016	0.019
	11/06/12	200.7/200.8	0.0095	0.037	<0.002	0.0079	<0.006	**3.1**	<0.005	**0.6**	0.011		**2.2**	<0.0025	0.066
	05/29/12	200.7/200.8	0.0091	0.074	<0.002	<0.006	0.014	**2.3**	<0.005	0.15	0.0098		0.82	<0.0025	0.17
	11/01/11	200.7/200.8	0.0077	0.18	<0.002	0.013	0.021	**7.3**	<0.005	0.14	0.0067		**4.5**	<0.0025	0.43
	05/23/11	200.7/200.8	**0.014**	0.077	<0.002	**0.055**	0.013	**20**	<0.005	**0.36**	*<0.05**		1.5	<0.0025	0.23
	11/16/10	6010B	*<0.1**	<0.1	*<0.01**	**0.39**	<0.03	**14**	*<0.025**	0.19	*<0.25**		0.67	<0.02	0.89
	08/02/10	6010B	*<0.5**	<0.5	*<0.05**	*<0.15**	<0.15	**15**	*<0.13**	**0.43**	*<1.3**		1.6	NL	1.3
	04/20/10	6010B	*<0.1**	0.27	*<0.01**	<0.03	<0.03	**36**	*<0.025**	**0.24**	*<0.25**		<0.2	0.00581	0.49
EP-2	11/21/19	200.7/200.8	0.0094	0.14	<0.002	0.0083	0.01	**2.9**	<0.0025	0.15	0.0032	0.0026	<0.12	0.0016	0.037
	04/30/19	200.7/200.8	0.0068	0.25	<0.002	0.0017	0.0057	0.53	<0.0025	**0.29**	0.0082	0.0047	0.088	0.0021	0.012
	09/06/18	200.7/200.8	**0.011**	0.16	NM	0.0024	0.01	0.16	<0.0025	**0.22**	0.0057	NM	0.085	0.0015	0.006
	02/21/18	200.7/200.8	0.0087	0.17	<0.00058	0.0027	0.0093	0.94	<0.0025	0.17	0.011	0.0094	0.15	0.00071	0.024
	10/24/17	200.7/200.8	**0.012**	0.17	<0.002	0.005	<0.006	0.89	<0.0025	**0.32**	0.01		<0.2	<0.0025	0.016
	03/30/17	200.7/200.8	**0.018**	0.24	<0.002	0.0075	<0.006	**1.4**	0.00087	**0.35**	0.032		0.14	0.0017	0.024
	08/29/16	200.7/200.8	**0.014**	0.12	<0.002	0.012	<0.006	**3.5**	<0.0025	**0.43**	0.03		0.069	0.0015	0.038
	03/02/16	200.7/200.8	**0.011**	0.13	<0.002	0.0072	<0.006	0.85	<0.005	**0.22**	0.018		0.071	0.0051	0.014
	09/01/15	200.7/200.8	**0.014**	0.13	<0.002	0.013	<0.006	0.58	<0.0025	**0.3**	0.013		<0.2	0.0048	0.014
	03/24/15	200.7/200.8	*<0.2**	0.14	<0.002	0.017	0.0073	**4.4**	<0.01	**0.42**	*<0.2**		<0.2	<0.01	0.089
	11/12/14	200.7/200.8	*<0.02**	0.11	<0.002	0.012	<0.006	**2.8**	0.002	**0.24**	<0.02		<0.2	0.0071	0.025
	03/05/14	200.7/200.8	**0.012**	0.12	<0.002	0.013	<0.006	**1.2**	<0.001	**0.36**	0.023		<0.1	0.0051	0.02
	10/15/13	200.7/200.8	**0.011**	0.093	<0.002	0.0081	<0.006	0.45	<0.01	0.2	0.012		<0.2	<0.01	0.032
	05/28/13	200.7/200.8	**0.013**	0.056	<0.002	0.017	<0.006	**3.1**	<0.005	**0.44**	0.029		<0.2	<0.001	0.045
	11/06/12	200.7/200.8	0.0093	0.037	<0.002	0.014	<0.006	**1.3**	<0.005	**0.37**	0.0053		0.33	<0.0025	0.025
	05/29/12	200.7/200.8	**0.011**	0.064	<0.002	<0.006	<0.006	0.99	<0.005	0.15	0.011		<0.2	<0.0025	0.032
	11/01/11	200.7/200.8	0.0083	0.059	<0.002	0.008	<0.006	**3.9**	<0.005	0.11	0.0062		1.5	<0.005	0.12
	05/23/11	200.7/200.8	**0.014**	0.024	<0.002	0.024	<0.006	**2.6**	<0.005	**0.33**	*<0.05**		<0.2	<0.0025	0.037
	11/16/10	200.7/200.8	*<0.1**	<0.11	*<0.01**	**0.051**	<0.03	**7.9**	*<0.025**	**0.41**	*<0.25**		0.45	<0.001	0.59
	08/02/10	6010B	*<0.2**	<0.2	*<0.02**	*<0.06**	<0.06	**2.4**	*<0.05**	**0.23**	*<0.5**		<0.2	<0.001	<0.5
	04/20/10	6010B	*<0.1**	<0.1	*<0.01**	<0.03	<0.03	**17**	*<0.025**	**0.31**	*<0.25**		0.77	0.0083	<0.25

8.15.2 EVAPORATION PONDS (EP-1 thru EP-12B)
Total Metals Analytical Result Summary

STANDARDS			PARAMETERS												
			Arsenic (mg/L)	Barium (mg/L)	Cadmium (mg/L)	Chromium (mg/L)	Copper (mg/L)	Iron (mg/L)	Lead (mg/L)	Manganese (mg/L)	Selenium (mg/L)	Silver (mg/L)	Mercury (ug/L)	Uranium (mg/L)	Zinc (mg/L)
WQCC 20 NMAC 6.2.3103 (DEC 2018)			**0.01**	**2**	**0.01**	**0.05**	**1**	**1**	**0.015**	**0.2**	**0.05**	**0.05**	**2**	**0.03**	**10**
40 CFR 141.62 MCL			0.01	2.0	0.005	0.1	1.3	NE	0.015	NE	0.05	NE	2	0.03	NE
NMED Tap Water (Rev 2. JUN 2019)			0.000855	3.28	0.00624	0.0057	0.7898	13.8	NE	2.02	0.0987	0.0812	0.626	0.0592	5.96
EPA RSL for Tap Water (NOV 2019)			0.000052	3.8	0.0092	22	0.8	14	0.015	0.43	0.1	0.094	0.63	0.004	6
POND ID	**DATE SAMPLED**	**METHOD**													
EP-3	11/20/19	200.7/200.8	0.0092	0.15	<0.002	0.014	0.007	**9.6**	<0.0025	**0.34**	0.0055	<0.005	0.22	0.0029	0.039
	04/30/19	200.7/200.8	0.0087	0.24	<0.002	0.0019	0.0056	0.53	0.00075	**0.36**	0.0087	0.0058	0.11	0.002	0.0084
	09/06/18	200.7/200.8	**0.013**	0.15	NM	0.0022	0.0075	0.18	<0.0025	**0.23**	0.006	NM	0.11	0.0013	0.012
	02/21/18	200.7/200.8	0.0077	0.28	<0.00058	0.0058	0.0086	**3.1**	0.0023	**0.28**	0.0094	0.013	0.13	0.0012	0.024
	10/24/17	200.7/200.8	**0.012**	0.17	<0.002	0.0057	<0.006	0.98	<0.0025	**0.31**	0.01		<0.2	<0.0025	0.017
	03/30/17	200.7/200.8	**0.018**	0.22	<0.002	0.0072	<0.006	0.69	0.00063	**0.35**	0.03		0.079	0.0011	0.016
	08/29/16	200.7/200.8	0.0089	0.14	<0.002	0.01	<0.006	**2.5**	<0.0025	**0.38**	0.032		0.067	0.0016	0.033
	03/02/16	200.7/200.8	**0.013**	0.18	<0.002	0.0095	<0.006	**1.4**	0.00083	**0.38**	0.019		0.079	0.0042	0.015
	09/01/15	200.7/200.8	**0.015**	0.2	<0.002	0.017	<0.006	0.42	<0.0025	**0.29**	0.018		<0.2	0.0027	0.013
	03/24/15	200.7/200.8	*<0.2**	0.13	<0.002	0.01	<0.006	**1.2**	*<0.2**	**0.33**	*<0.2**		<0.2	*<0.2**	0.021
	11/12/14	200.7/200.8	*<0.02**	0.1	<0.002	0.0098	<0.006	**1.9**	*<0.02**	**0.23**	<0.02		<0.2	<0.02	0.02
	03/05/14	200.7/200.8	**0.011**	0.15	*<0.01**	<0.03	<0.03	1	<0.01	**0.41**	0.019		<0.2	<0.01	<0.05
	10/15/13	200.7/200.8	**0.014**	0.11	<0.002	0.007	<0.006	0.76	<0.01	0.19	0.015		<0.2	<0.01	0.023
	05/28/13	200.7/200.8	**0.013**	0.079	<0.002	0.011	<0.006	0.89	<0.005	**0.22**	0.013		<0.2	<0.005	0.016
	11/06/12	200.7/200.8	0.0095	0.039	<0.002	0.0076	<0.006	**1.7**	<0.005	**0.48**	0.008		0.44	<0.0025	0.031
	05/29/12	200.7/200.8	**0.013**	0.081	<0.002	<0.006	<0.006	0.39	<0.005	0.11	0.013		<0.2	<0.005	<0.01
	11/01/11	200.7/200.8	0.0076	0.061	<0.002	0.0069	<0.006	**2.6**	<0.005	0.12	0.0065		0.55	<0.005	0.06
	05/23/11	200.7/200.8	**0.015**	0.034	<0.002	0.023	<0.006	**2**	<0.005	**0.33**	*<0.05**		<0.2	<0.0025	0.033
	11/16/10	6010B	*<0.1**	<0.1	*<0.01**	<0.03	<0.03	0.65	*<0.025**	0.19	*<0.25**		<0.2	<0.001	<0.1
	08/02/10	6010B	*<0.2**	<0.2	*<0.02**	*<0.06**	<0.06	**3**	*<0.05**	**0.38**	*<0.5**		<0.2	<0.001	<0.5
	04/20/10	6010B	*<0.1**	<0.1	*<0.01**	<0.03	<0.03	**1.6**	*<0.025**	**0.39**	*<0.25**		<0.2	0.00326	<0.25

8.15.2 EVAPORATION PONDS (EP-1 thru EP-12B)
Total Metals Analytical Result Summary

			PARAMETERS												
STANDARDS			Arsenic (mg/L)	Barium (mg/L)	Cadmium (mg/L)	Chromium (mg/L)	Copper (mg/L)	Iron (mg/L)	Lead (mg/L)	Manganese (mg/L)	Selenium (mg/L)	Silver (mg/L)	Mercury (ug/L)	Uranium (mg/L)	Zinc (mg/L)
WQCC 20 NMAC 6.2.3103 (DEC 2018)			**0.01**	**2**	**0.01**	**0.05**	**1**	**1**	**0.015**	**0.2**	**0.05**	**0.05**	**2**	**0.03**	**10**
40 CFR 141.62 MCL			0.01	2.0	0.005	0.1	1.3	NE	0.015	NE	0.05	NE	2	0.03	NE
NMED Tap Water (Rev 2. JUN 2019)			0.000855	3.28	0.00624	0.0057	0.7898	13.8	NE	2.02	0.0987	0.0812	0.626	0.0592	5.96
EPA RSL for Tap Water (NOV 2019)			0.000052	3.8	0.0092	22	0.8	14	0.015	0.43	0.1	0.094	0.63	0.004	6
POND ID	DATE SAMPLED	METHOD													
EP-4	11/20/19 [1]		EP-4, EP-5, and EP-6 combined into one sample (see EP-6)												
	04/30/19	200.7/200.8	0.0084	0.24	<0.002	0.0019	0.0056	0.53	<0.0025	**0.36**	0.0068	0.0056	0.098	0.0021	0.0082
	09/06/18	200.7/200.8	**0.014**	0.16	NM	<0.006	0.0067	0.17	<0.0025	**0.21**	0.006	NM	0.13	0.0011	<0.01
	02/21/18	200.7/200.8	0.0089	0.26	<0.00058	0.0036	0.007	0.99	<0.005	**0.29**	0.01	0.016	0.087	0.0011	0.015
	10/24/17	200.7/200.8	**0.011**	0.17	<0.002	0.0055	<0.006	0.96	<0.0025	**0.3**	0.01		<0.2	<0.0025	0.015
	03/30/17	200.7/200.8	**0.015**	0.23	<0.002	0.0063	<0.006	0.76	0.00062	**0.35**	0.027		0.091	0.0011	0.016
	08/29/16	200.7/200.8	**0.011**	0.15	<0.002	0.0095	<0.006	**1.6**	<0.0025	**0.35**	0.035		0.055	0.0022	0.025
	03/02/16	200.7/200.8	**0.023**	0.15	<0.002	0.0086	<0.006	0.63	<0.005	**0.43**	0.021		0.073	0.004	0.012
	09/01/15	200.7/200.8	**0.016**	0.2	<0.002	0.017	<0.006	0.43	<0.0025	**0.29**	0.018		<0.2	0.0028	0.018
	03/24/15	200.7/200.8	*<0.2**	0.13	<0.002	0.009	<0.006	0.81	*<0.2**	**0.44**	*<0.2**		<0.2	*<0.2**	0.014
	11/12/14	200.7/200.8	*<0.02**	0.11	<0.002	0.01	<0.006	**1.7**	*<0.02**	**0.28**	<0.02		<0.2	<0.02	0.023
	03/05/14	200.7/200.8	**0.012**	0.14	*<0.01**	<0.03	<0.03	0.99	<0.01	**0.43**	0.018		<0.2	<0.01	<0.05
	10/15/13	200.7/200.8	**0.012**	0.091	<0.002	0.0068	<0.006	0.38	<0.01	0.15	0.017		<0.2	<0.01	0.018
	05/28/13	200.7/200.8	**0.014**	0.082	<0.002	0.012	<0.006	0.58	<0.01	0.18	<0.02		<0.2	<0.01	0.015
	11/06/12	200.7/200.8	**0.011**	0.061	<0.002	<0.006	<0.006	**1.2**	<0.005	**0.52**	0.011		<0.2	<0.0025	0.026
	05/29/12	200.7/200.8	**0.015**	0.064	<0.002	0.006	<0.006	0.28	<0.005	0.064	0.018		<0.2	<0.0025	<0.01
	11/01/11	200.7/200.8	0.0087	0.077	<0.002	<0.006	<0.006	**1.2**	<0.005	**0.21**	0.0078		0.22	<0.005	0.024
	05/23/11	200.7/200.8	**0.012**	0.065	<0.002	0.024	<0.006	0.41	<0.005	**0.3**	*<0.05**		<0.2	<0.0025	0.018
	11/16/10	6010B	*<0.1**	<0.1	*<0.01**	<0.03	<0.03	0.5	*<0.025**	0.17	*<0.25**		<0.2	<0.001	<0.1
	08/02/10	6010B	*<0.2**	<0.2	*<0.02**	*<0.06**	<0.06	0.76	*<0.05**	**0.31**	*<0.5**		<0.2	<.001	<0.5
	04/20/10	6010B	*<0.1**	0.086	<0.002	<0.006	<0.006	**2**	<0.005	**0.37**	*<0.05**		<0.2	0.00327	<0.05

8.15.2 EVAPORATION PONDS (EP-1 thru EP-12B)
Total Metals Analytical Result Summary

			PARAMETERS												
STANDARDS			Arsenic (mg/L)	Barium (mg/L)	Cadmium (mg/L)	Chromium (mg/L)	Copper (mg/L)	Iron (mg/L)	Lead (mg/L)	Manganese (mg/L)	Selenium (mg/L)	Silver (mg/L)	Mercury (ug/L)	Uranium (mg/L)	Zinc (mg/L)
WQCC 20 NMAC 6.2.3103 (DEC 2018)			**0.01**	**2**	**0.01**	**0.05**	**1**	**1**	**0.015**	**0.2**	**0.05**	**0.05**	**2**	**0.03**	**10**
40 CFR 141.62 MCL			0.01	2.0	0.005	0.1	1.3	NE	0.015	NE	0.05	NE	2	0.03	NE
NMED Tap Water (Rev 2. JUN 2019)			0.000855	3.28	0.00624	0.0057	0.7898	13.8	NE	2.02	0.0987	0.0812	0.626	0.0592	5.96
EPA RSL for Tap Water (NOV 2019)			0.000052	3.8	0.0092	22	0.8	14	0.015	0.43	0.1	0.094	0.63	0.004	6
POND ID	DATE SAMPLED	METHOD													
EP-5	11/20/19 [1]		EP-4, EP-5, and EP-6 combined into one sample (see EP-6)												
	04/30/19	200.7/200.8	**0.014**	0.2	<0.002	0.0018	0.0044	0.38	0.00049	**0.48**	0.0053	0.0069	0.068	0.0023	<0.01
	09/06/18	200.7/200.8	**0.021**	0.16	NM	0.0044	0.0045	0.094	<0.0025	0.16	<0.005	NM	0.044	0.0012	0.0043
	02/21/18	200.7/200.8	**0.013**	0.32	<0.00058	0.008	0.0085	**3**	<0.005	**0.51**	0.013	0.016	0.075	0.0016	0.017
	10/24/17	200.7/200.8	**0.017**	0.24	<0.002	0.01	<0.006	0.28	<0.005	**0.47**	0.016		<0.2	0.0028	0.008
	03/30/17	200.7/200.8	**0.032**	0.18	<0.002	0.0094	<0.006	0.33	0.0008	**0.66**	**0.056**		0.059	0.0025	0.0084
	08/29/16	200.7/200.8	**0.024**	0.17	<0.002	0.0085	<0.006	0.25	<0.0025	**0.35**	0.047		0.054	0.0036	0.0078
	03/02/16	200.7/200.8	**0.022**	0.15	<0.002	0.009	<0.006	0.6	<0.005	**0.43**	0.02		0.067	0.0039	0.011
	09/01/15	200.7/200.8	**0.026**	0.16	<0.002	0.016	<0.006	0.16	<0.005	**0.32**	0.034		<0.2	<0.005	0.012
	03/24/15	200.7/200.8	**0.022**	0.14	<0.002	0.01	<0.006	0.89	<0.01	**0.89**	*<0.2**		<0.2	<0.01	0.016
	11/12/14	200.7/200.8	**0.032**	0.13	<0.002	0.0077	<0.006	0.62	*<0.02**	**0.48**	*<0.05**		<0.2	*<0.05**	0.012
	03/05/14	200.7/200.8	**0.015**	0.12	*<0.01**	<0.03	<0.03	0.6	<0.01	**0.55**	0.016		<0.2	<0.01	<0.05
	10/15/13	200.7/200.8	**0.013**	0.09	<0.002	0.0071	<0.006	0.33	<0.01	0.18	0.017		<0.2	<0.01	0.016
	05/28/13	200.7/200.8	**0.012**	0.084	<0.002	0.012	<0.006	0.47	<0.01	0.16	<0.02		<0.2	<0.01	0.014
	11/06/12	200.7/200.8	**0.012**	0.062	<0.002	<0.006	<0.006	0.63	<0.005	**0.39**	0.012		<0.2	<0.0025	0.023
	05/29/12	200.7/200.8	**0.015**	0.064	<0.002	<0.006	<0.006	0.28	<0.005	0.07	0.018		<0.2	<0.0025	<0.01
	11/01/11	200.7/200.8	**0.011**	0.094	<0.002	0.0085	<0.006	0.39	<0.005	**0.27**	0.0069		<0.2	<0.005	0.01
	05/23/11	200.7/200.8	**0.018**	0.083	<0.002	0.022	<0.006	0.14	<0.005	0.19	*<0.05**		<0.2	<0.0025	0.015
	11/16/10	6010B	*<0.1**	<0.1	*<0.02**	0.043	<0.03	0.68	*<0.025**	**0.22**	*<0.25**		<0.2	<0.001	<0.1
	08/02/10	6010B	*<0.2**	<0.2	*<0.02**	*<0.06**	<0.06	<0.5	*<0.05**	0.069	*<0.5**		*<2**	<0.001	<0.5
	04/20/10	6010B	*<0.1**	0.11	*<0.01**	<0.03	<0.03	**1.1**	*<0.025**	**0.45**	*<0.25**		<0.2	0.00571	<0.05

8.15.2 EVAPORATION PONDS (EP-1 thru EP-12B)
Total Metals Analytical Result Summary

STANDARDS			PARAMETERS												
			Arsenic (mg/L)	Barium (mg/L)	Cadmium (mg/L)	Chromium (mg/L)	Copper (mg/L)	Iron (mg/L)	Lead (mg/L)	Manganese (mg/L)	Selenium (mg/L)	Silver (mg/L)	Mercury (ug/L)	Uranium (mg/L)	Zinc (mg/L)
WQCC 20 NMAC 6.2.3103 (DEC 2018)			**0.01**	**2**	**0.01**	**0.05**	**1**	**1**	**0.015**	**0.2**	**0.05**	**0.05**	**2**	**0.03**	**10**
40 CFR 141.62 MCL			0.01	2.0	0.005	0.1	1.3	NE	0.015	NE	0.05	NE	2	0.03	NE
NMED Tap Water (Rev 2. JUN 2019)			0.000855	3.28	0.00624	0.0057	0.7898	13.8	NE	2.02	0.0987	0.0812	0.626	0.0592	5.96
EPA RSL for Tap Water (NOV 2019)			0.000052	3.8	0.0092	22	0.8	14	0.015	0.43	0.1	0.094	0.63	0.004	6
POND ID	**DATE SAMPLED**	**METHOD**													
EP-6	11/20/2019 [1]	200.7/200.8	**0.016**	0.25	<0.002	0.0055	0.0058	0.74	<0.0025	**0.6**	<0.02	0.008	<0.2	0.0023	0.0059
	04/29/19	200.7/200.8	**0.014**	0.19	<0.002	0.0025	<0.006	0.32	0.00047	**0.47**	0.004	0.0071	0.064	0.0023	<0.01
	09/07/18	200.7/200.8	**0.023**	0.16	NM	0.0037	<0.006	0.081	<0.0025	0.15	<0.005	NM	0.078	0.0012	<0.01
	02/21/18	200.7/200.8	**0.021**	0.32	<0.00058	0.013	0.0094	**3.9**	0.0026	**0.64**	0.014	0.016	0.05	0.0022	0.015
	10/24/17	200.7/200.8	**0.018**	0.25	<0.002	0.01	<0.006	0.19	<0.005	**0.49**	0.018		<0.2	0.0029	0.0039
	03/30/17	200.7/200.8	**0.031**	0.18	<0.002	0.0093	<0.006	0.38	0.0007	**0.66**	**0.058**		0.059	0.0026	0.0097
	08/29/16	200.7/200.8	**0.038**	0.19	<0.002	0.0083	<0.006	0.15	<0.0025	**0.39**	0.046		<0.2	0.0039	0.0073
	03/02/16	200.7/200.8	**0.021**	0.18	<0.002	0.011	<0.006	**1.1**	0.0012	**0.47**	0.017		<0.2	0.0039	0.014
	09/01/15	200.7/200.8	**0.031**	0.13	<0.002	0.014	<0.006	0.028	<0.005	**0.33**	0.04		<0.2	<0.005	0.014
	03/25/15	200.7/200.8	**0.023**	0.13	<0.002	0.0092	<0.006	0.78	<0.01	**0.43**	0.026		<0.2	<0.01	0.018
	11/12/14	200.7/200.8	**0.034**	0.15	<0.002	0.0082	<0.006	**1.6**	*<0.02**	**0.55**	*<0.05**		<0.2	*<0.05**	<0.02
	03/05/14	200.7/200.8	**0.015**	0.12	<0.002	0.0089	<0.006	0.67	<0.01	**0.59**	0.018		<0.2	<0.01	0.014
	10/15/13	200.7/200.8	*<0.05**	0.099	<0.002	0.0099	<0.006	0.1	*<0.05**	**0.22**	*<0.05**		<0.2	*<0.05**	<0.01
	05/28/13	200.7/200.8	**0.023**	0.09	<0.002	0.0088	<0.006	0.13	<0.01	0.13	<0.02		<0.2	<0.002	<0.01
	11/06/12	200.7/200.8	**0.023**	0.092	<0.002	0.0076	<0.006	0.14	<0.005	0.086	0.024		<0.2	<0.0025	<0.01
	05/29/12	200.7/200.8	**0.017**	0.1	<0.002	0.0093	<0.006	0.28	<0.005	**0.42**	0.016		<0.2	<0.0025	0.013
	11/01/11	200.7/200.8	**0.017**	0.11	<0.002	0.015	<0.006	0.15	<0.005	**0.21**	0.0089		<0.2	<0.005	<0.01
	05/23/11	200.7/200.8	**0.02**	0.12	<0.002	0.019	<0.006	0.17	<0.005	0.14	*<0.05**		<0.2	<0.005	0.01
	11/16/10	6010B	*<0.1**	0.14	*<0.01**	0.04	<0.03	<0.03	*<0.025**	**0.33**	*<0.25**		<0.2	0.001	<0.1
	08/02/10	6010B	*<0.2**	<0.2	*<0.02**	*<0.06**	<0.06	<0.5	*<0.05**	**4.8**	*<0.5**		<0.2	<0.001	<0.5

8.15.2 EVAPORATION PONDS (EP-1 thru EP-12B)
Total Metals Analytical Result Summary

STANDARDS			PARAMETERS												
			Arsenic (mg/L)	Barium (mg/L)	Cadmium (mg/L)	Chromium (mg/L)	Copper (mg/L)	Iron (mg/L)	Lead (mg/L)	Manganese (mg/L)	Selenium (mg/L)	Silver (mg/L)	Mercury (ug/L)	Uranium (mg/L)	Zinc (mg/L)
WQCC 20 NMAC 6.2.3103 (DEC 2018)			**0.01**	**2**	**0.01**	**0.05**	**1**	**1**	**0.015**	**0.2**	**0.05**	**0.05**	**2**	**0.03**	**10**
40 CFR 141.62 MCL			0.01	2.0	0.005	0.1	1.3	NE	0.015	NE	0.05	NE	2	0.03	NE
NMED Tap Water (Rev 2. JUN 2019)			0.000855	3.28	0.00624	0.0057	0.7898	13.8	NE	2.02	0.0987	0.0812	0.626	0.0592	5.96
EPA RSL for Tap Water (NOV 2019)			0.000052	3.8	0.0092	22	0.8	14	0.015	0.43	0.1	0.094	0.63	0.004	6
POND ID	**DATE SAMPLED**	**METHOD**													
EP-7	11/20/19	200.7/200.8	**0.31**	0.17	*<0.04**	*<0.12**	0.089	0.28	*<0.05**	**1.9**	*<0.5**	*<0.1**	<0.2	*<0.05**	<0.2
	04/29/19	200.7/200.8	**0.11**	0.0028	*<0.01**	<0.03	<0.03	0.094	<0.01	**0.59**	0.012	0.017	<0.2	0.0048	<0.05
	09/07/18	200.7/200.8	**0.16**	0.19	NM	0.017	<0.03	0.16	*<0.025**	**0.8**	*<0.05**	NM	0.041	0.0051	0.0048
	02/23/18	200.7/200.8	**0.14**	0.24	<0.0029	0.017	<0.03	0.77	*<0.1**	**0.66**	*<0.2**	0.025	<0.2	*<0.1**	<0.05
	10/24/17	200.7/200.8	**0.11**	0.23	*<0.01**	0.026	<0.03	0.15	*<0.025**	**1.2**	**0.14**		<0.2	0.0081	<0.05
	03/30/17	200.7/200.8	**0.18**	0.16	*<0.01**	<0.03	<0.03	0.72	*<0.025**	**0.71**	**0.3**		0.04	<0.025	0.018
	08/30/16	200.7/200.8	**0.14**	0.17	*<0.01**	<0.03	<0.03	<0.1	*<0.025**	**1.5**	**0.19**		0.075	0.0088	0.02
	03/02/16	200.7/200.8	**0.069**	0.2	*<0.01**	0.012	<0.03	**2**	*<0.025**	**0.61**	**0.071**		0.092	0.0059	0.023
	09/01/15	200.7/200.8	**0.16**	0.18	*<0.01**	**0.064**	<0.03	0.12	*<0.05**	**0.51**	**0.22**		<0.2	*<0.05**	<0.05
	03/25/15	200.7/200.8	*<0.2**	0.16	*<0.01**	<0.03	<0.03	0.32	*<0.2**	**0.77**	*<0.2**		<0.2	*<0.2**	<0.05
	11/12/14	200.7/200.8	**0.14**	0.2	*<0.01**	<0.03	<0.03	0.72	*<0.05**	**1.1**	*<0.5**		<0.2	*<0.05**	<0.05
	03/05/14	200.7/200.8	**0.15**	0.11	*<0.01**	<0.03	<0.03	0.28	*<0.1**	**2**	**0.12**		<0.2	*<0.1**	<0.05
	10/15/13	200.7/200.8	**0.14**	0.099	*<0.01**	*<0.3**	<0.03	0.39	*<0.05**	**0.54**	**0.16**		<0.2	*<0.05**	<0.05
	05/28/13	200.7/200.8	**0.13**	0.11	*<0.1**	<0.03	<0.03	0.14	*<0.05**	**3.1**	**0.1**		<0.2	*<0.1**	<0.05
	11/06/12	200.7/200.8	**0.14**	0.081	*<0.1**	<0.03	<0.03	<0.1	*<0.025**	**0.32**	*<0.25**		<0.2	<0.02	<0.05
	05/29/12	200.7/200.8	**0.078**	0.14	<0.002	0.014	<0.006	0.18	<0.005	**0.74**	**0.077**		<0.2	<0.02	0.011
	11/01/11	200.7/200.8	**0.049**	0.098	*<0.01**	<0.03	<0.03	0.39	*<0.025**	**0.83**	0.03		<0.2	<0.02	<0.05
	05/23/11	200.7/200.8	**0.079**	0.13	*<0.01**	<0.03	<0.03	0.16	*<0.025**	**2.5**	*<0.25**		<0.2	<0.01	<0.05
	11/16/10	6010B	*<0.2**	<0.2	*<0.02**	*<0.06**	<0.06	0.83	*<0.05**	**3.3**	*<0.5**		<0.2	0.003	<0.2
	08/02/10	6010B	*<1.0**	<1.0	*<0.1**	*<0.3**	<0.3	*<2.5**	*<0.25**	**3.9**	*<2.5**		<0.2	NL	<2.5
	04/20/10	6010B	**0.1**	<0.2	*<0.01**	<0.03	<0.03	0.28	*<0.025**	**2.7**	*<0.25**		<0.2	0.00225	<0.25

8.15.2 EVAPORATION PONDS (EP-1 thru EP-12B)
Total Metals Analytical Result Summary

			PARAMETERS												
STANDARDS			Arsenic (mg/L)	Barium (mg/L)	Cadmium (mg/L)	Chromium (mg/L)	Copper (mg/L)	Iron (mg/L)	Lead (mg/L)	Manganese (mg/L)	Selenium (mg/L)	Silver (mg/L)	Mercury (ug/L)	Uranium (mg/L)	Zinc (mg/L)
WQCC 20 NMAC 6.2.3103 (DEC 2018)			**0.01**	**2**	**0.01**	**0.05**	**1**	**1**	**0.015**	**0.2**	**0.05**	**0.05**	**2**	**0.03**	**10**
40 CFR 141.62 MCL			0.01	2.0	0.005	0.1	1.3	NE	0.015	NE	0.05	NE	2	0.03	NE
NMED Tap Water (Rev 2. JUN 2019)			0.000855	3.28	0.00624	0.0057	0.7898	13.8	NE	2.02	0.0987	0.0812	0.626	0.0592	5.96
EPA RSL for Tap Water (NOV 2019)			0.000052	3.8	0.0092	22	0.8	14	0.015	0.43	0.1	0.094	0.63	0.004	6
POND ID	DATE SAMPLED	METHOD													
EP-8	11/20/19	200.7/200.8	**0.26**	0.21	*<0.04**	*<0.12**	0.11	0.23	*<0.05**	**5.1**	*<0.5**	0.039	<0.2	*<0.05**	<0.2
	04/29/19	200.7/200.8	**0.12**	0.19	*<0.01**	<0.03	0.022	0.13	<0.01	**0.61**	0.01	0.017	<0.02	0.0046	<0.05
	09/07/18	200.7/200.8	**0.096**	0.2	NM	0.009	0.029	0.062	<0.01	**1**	<0.02	NM	0.046	0.0031	<0.01
	02/23/18	200.7/200.8	**0.15**	0.25	<0.0029	<0.03	<0.03	0.72	*<0.1**	**0.65**	*<0.2**	0.026	<0.2	*<0.1**	<0.05
	10/24/17	200.7/200.8	**0.12**	0.22	*<0.01**	0.026	<0.03	0.2	*<0.025**	**1.1**	**0.19**		<0.2	0.0079	<0.05
	03/30/17	200.7/200.8	**0.17**	0.17	*<0.01**	<0.03	<0.03	0.31	*<0.025**	**0.55**	**0.31**		0.047	<0.025	0.016
	08/30/16	200.7/200.8	**0.14**	0.19	*<0.01**	0.016	<0.03	<0.1	*<0.025**	**1.5**	**0.19**		0.079	0.0095	0.018
	09/01/15	200.7/200.8	**0.18**	0.18	*<0.01**	0.046	<0.03	<0.1	*<0.05**	**0.52**	**0.22**		<0.2	*<0.05**	<0.05
	03/25/15	200.7/200.8	*<0.2**	0.16	*<0.01**	<0.03	<0.03	0.34	*<0.2**	**0.78**	*<0.2**		<0.2	*<0.2**	<0.05
	11/12/14	200.7/200.8	**0.14**	0.2	*<0.01**	<0.03	<0.03	0.57	*<0.05**	**1.2**	*<0.5**		<0.2	*<0.05**	<0.05
	03/05/14	200.7/200.8	**0.12**	0.12	*<0.01**	<0.03	<0.03	0.28	*<0.1**	**2.2**	*<0.1**		<0.2	*<0.1**	<0.05
	10/15/13	200.7/200.8	**0.35**	0.24	*<0.02**	*<0.06**	<0.06	0.23	*<0.1**	**18**	**0.3**		<0.2	*<0.1**	<0.1
	05/28/13	200.7/200.8	**0.12**	0.13	*<0.01**	<0.03	<0.03	0.16	*<0.02**	**4**	*<0.1**		<1	<0.01	<0.05
	11/06/12	200.7/200.8	**0.5**	0.23	*<0.04**	*<0.12**	<0.12	<0.2	*<0.1**	**34**	*<2.5**		<0.2	*<0.05**	<0.2
	05/29/12	200.7/200.8	**0.15**	0.17	<0.002	0.018	0.0071	0.5	<0.005	**8.6**	**0.12**		<0.2	<0.02	0.025
	11/01/11	200.7/200.8	**0.047**	0.13	<0.002	0.017	<0.006	0.17	<0.005	**1.5**	0.026		<0.2	<0.005	0.012
	05/23/11	200.7/200.8	**0.42**	0.23	*<0.01**	<0.03	<0.06	0.41	*<0.025**	**20**	*<0.25**		<0.2	<0.0025	0.1
	11/16/10	6010B	*<0.4**	<0.4	*<0.04**	*<0.12**	<0.12	*<1.0**	*<0.025**	*<1.0**	*<1.0**		<0.2	0.003	<0.4
	08/02/10	6010B	*<1.0**	<1.0	*<0.1**	*<0.3**	<0.3	*<2.5**	*<0.25**	**24**	*<2.5**		<0.2	NL	<2.5
	04/20/10	6010B	**0.17**	0.13	*<0.01**	<0.03	<0.03	0.62	*<0.025**	**9.6**	*<0.25**		<0.2	0.00227	<0.25

8.15.2 EVAPORATION PONDS (EP-1 thru EP-12B)
Total Metals Analytical Result Summary

STANDARDS			PARAMETERS												
			Arsenic (mg/L)	Barium (mg/L)	Cadmium (mg/L)	Chromium (mg/L)	Copper (mg/L)	Iron (mg/L)	Lead (mg/L)	Manganese (mg/L)	Selenium (mg/L)	Silver (mg/L)	Mercury (ug/L)	Uranium (mg/L)	Zinc (mg/L)
WQCC 20 NMAC 6.2.3103 (DEC 2018)			**0.01**	**2**	**0.01**	**0.05**	**1**	**1**	**0.015**	**0.2**	**0.05**	**0.05**	**2**	**0.03**	**10**
40 CFR 141.62 MCL			0.01	2.0	0.005	0.1	1.3	NE	0.015	NE	0.05	NE	2	0.03	NE
NMED Tap Water (Rev 2. JUN 2019)			0.000855	3.28	0.00624	0.0057	0.7898	13.8	NE	2.02	0.0987	0.0812	0.626	0.0592	5.96
EPA RSL for Tap Water (NOV 2019)			0.000052	3.8	0.0092	22	0.8	14	0.015	0.43	0.1	0.094	0.63	0.004	6
POND ID	**DATE SAMPLED**	**METHOD**													
EP-9	11/20/19	200.7/200.8	**0.1**	0.16	*<0.02**	*<0.06**	0.073	0.17	*<0.05**	**1.9**	*<0.2**	0.031	<0.2	*<0.05**	0.091
	04/29/19	200.7/200.8	**0.082**	0.17	*<0.01**	<0.03	0.022	0.18	<0.01	**0.38**	0.011	0.016	<0.2	0.0055	<0.05
	09/07/18	200.7/200.8	**0.082**	0.18	NM	0.0069	<0.006	0.07	*<0.025**	**1.3**	*<0.05**	NM	<0.2	<0.025	0.0055
	02/23/18	200.7/200.8	**0.067**	0.22	<0.0029	<0.03	<0.03	0.76	*<0.025**	**1.3**	*<0.1**	0.015	<0.2	*<0.05**	<0.05
	10/24/17	200.7/200.8	**0.22**	0.26	*<0.01**	0.021	<0.03	0.1	*<0.025**	**4.9**	**0.33**		<0.2	0.0087	<0.05
	03/30/17	200.7/200.8	**0.13**	0.26	*<0.01**	<0.03	<0.03	**1.8**	*<0.025**	**1.4**	**0.23**		0.047	<0.025	0.022
	08/30/16	200.7/200.8	**0.25**	0.29	*<0.02**	*<0.06**	<0.06	<0.2	*<0.05**	**1.8**	**0.31**		0.092	*<0.05**	0.029
	03/02/16	200.7/200.8	**0.11**	0.24	*<0.01**	0.012	<0.03	0.26	*<0.025**	**0.27**	**0.079**		<0.2	0.0061	0.023
	09/01/15	200.7/200.8	**0.14**	0.22	*<0.01**	0.033	<0.03	<0.1	*<0.05**	**0.4**	**0.18**		<0.2	*<0.05**	<0.05
	03/25/15	200.7/200.8	*<0.2**	0.11	*<0.01**	<0.03	<0.03	0.12	*<0.2**	**0.5**	*<0.2**		<0.2	*<0.2**	<0.05
	11/13/14	200.7/200.8	**0.2**	0.25	*<0.01**	<0.03	<0.03	0.19	*<0.05**	**0.25**	*<1.0**		<0.2	*<0.05**	<0.1
	03/05/14	200.7/200.8	**0.12**	0.18	*<0.01**	<0.03	<0.03	0.26	*<0.1**	**2.7**	**0.15**		<0.2	*<0.1**	<0.05
	10/15/13	200.7/200.8	*<0.1**	0.18	*<0.01**	<0.03	<0.03	0.1	*<0.05**	**3.3**	**0.11**		<0.2	*<0.05**	<0.05
	05/28/13	200.7/200.8	**0.095**	0.2	*<0.01**	<0.03	<0.03	<0.1	*<0.05**	**3.4**	*<0.1**		<0.2	<0.01	<0.05
	11/06/12	200.7/200.8	**0.055**	0.15	*<0.01**	<0.03	<0.03	0.13	*<0.025**	**0.94**	*<0.25**		<0.2	<0.01	<0.05
	05/29/12	200.7/200.8	**0.081**	0.17	<0.002	0.0096	<0.006	0.11	<0.005	**4.7**	**0.074**		<0.2	<0.02	0.014
	11/01/11	200.7/200.8	**0.087**	0.2	*<0.01**	<0.03	<0.03	0.037	*<0.025**	**1.9**	**0.051**		<0.2	<0.02	<0.05
	05/23/11	200.7/200.8	**0.1**	0.2	*<0.01**	<0.03	<0.03	0.18	*<0.025**	**7.4**	*<0.25**		<0.2	<0.01	<0.05
	11/16/10	6010B	*<0.4**	<0.4	*<0.04**	*<0.12**	<0.12	*<1.0**	*<0.1**	**6.7**	*<1.0**		<0.2	0.003	<0.4
	04/20/10	6010B	*<0.1**	0.14	*<0.01**	<0.03	<0.03	0.62	*<0.025**	**29**	*<0.25**		<0.2	0.0022	<0.25

8.15.2 EVAPORATION PONDS (EP-1 thru EP-12B)
Total Metals Analytical Result Summary

STANDARDS			PARAMETERS												
			Arsenic (mg/L)	Barium (mg/L)	Cadmium (mg/L)	Chromium (mg/L)	Copper (mg/L)	Iron (mg/L)	Lead (mg/L)	Manganese (mg/L)	Selenium (mg/L)	Silver (mg/L)	Mercury (ug/L)	Uranium (mg/L)	Zinc (mg/L)
WQCC 20 NMAC 6.2.3103 (DEC 2018)			**0.01**	**2**	**0.01**	**0.05**	**1**	**1**	**0.015**	**0.2**	**0.05**	**0.05**	**2**	**0.03**	**10**
40 CFR 141.62 MCL			0.01	2.0	0.005	0.1	1.3	NE	0.015	NE	0.05	NE	2	0.03	NE
NMED Tap Water (Rev 2. JUN 2019)			0.000855	3.28	0.00624	0.0057	0.7898	13.8	NE	2.02	0.0987	0.0812	0.626	0.0592	5.96
EPA RSL for Tap Water (NOV 2019)			0.000052	3.8	0.0092	22	0.8	14	0.015	0.43	0.1	0.094	0.63	0.004	6
POND ID	DATE SAMPLED	METHOD													
EP-11	11/21/2019[2]	--	Not sampled - dry												
	04/29/19	200.7/200.8	**0.12**	0.2	*<0.01**	<0.03	0.02	0.19	0.0011	**0.63**	0.017	0.019	<0.2	0.0045	<0.05
	09/07/18	200.7/200.8	**0.96**	0.027	NM	**0.064**	<0.03	0.26	*<0.05**	**9**	*<0.1**	NM	<0.2	0.013	<0.05
	02/23/18	200.7/200.8	**0.15**	0.19	<0.0029	<0.03	<0.006	0.71	<0.01	0.1	<0.02	0.025	<0.2	*<0.1**	<0.05
	10/24/17	200.7/200.8	**0.24**	0.17	*<0.02**	0.044	<0.06	0.31	*<0.05**	**2.2**	**0.35**		<0.2	*<0.05**	<0.1
	03/30/17	200.7/200.8	**0.17**	0.18	*<0.01**	0.018	<0.03	0.31	*<0.025**	**0.59**	**0.32**		0.042	<0.025	0.019
	08/30/16	200.7/200.8	**0.14**	0.18	*<0.01**	0.02	<0.03	<0.1	*<0.025**	**1.5**	**0.19**		0.078	0.0083	0.017
	03/02/16	200.7/200.8	**0.086**	0.19	*<0.01**	<0.03	<0.03	**2.9**	*<0.025**	**0.55**	**0.075**		0.077	0.0066	0.021
	09/01/15	200.7/200.8	**0.17**	0.17	*<0.01**	0.036	<0.03	0.18	*<0.05**	**0.48**	**0.21**		<0.2	*<0.05**	<0.05
	03/25/15	200.7/200.8	*<0.2**	0.13	*<0.01**	<0.03	<0.03	0.22	*<0.2**	**0.66**	*<0.2**		<0.5	*<0.2**	<0.05
	11/12/14	200.7/200.8	**0.14**	0.16	*<0.01**	<0.03	<0.03	0.38	*<0.05**	**1.2**	*<0.5**		<0.2	*<0.05**	<0.05
	03/05/14	200.7/200.8	**0.042**	0.081	<0.002	0.013	<0.006	0.79	<0.01	**0.99**	0.041		<0.2	<0.01	0.019
	10/15/13	200.7/200.8	*<0.05**	0.072	<0.002	0.011	<0.006	0.42	*<0.05**	**0.41**	*<0.05**		<0.2	*<0.05**	<0.01
	05/28/13	200.7/200.8	**0.042**	0.064	<0.002	0.01	<0.006	0.12	<0.01	**0.44**	*<0.05**		<0.2	<0.005	<0.01
	11/06/12	200.7/200.8	**0.017**	0.051	<0.002	0.0065	<0.006	0.99	<0.005	**0.35**	0.014		<0.2	<0.0025	0.024
	05/29/12	200.7/200.8	**0.028**	0.086	<0.002	0.0099	<0.006	0.48	<0.005	**0.8**	0.017		<0.2	<0.0025	0.014
	11/01/11	200.7/200.8	0.0083	0.071	<0.002	<0.006	<0.006	**1.2**	<0.005	0.19	0.0084		<0.2	<0.005	0.021
	05/23/11	200.7/200.8	**0.061**	0.085	*<0.01**	<0.03	<0.03	0.22	*<0.025**	**0.9**	*<0.25**		<0.2	<0.01	<0.05
	11/16/10	6010B	*<0.1**	0.14	*<0.01**	**0.35**	<0.03	**1.3**	*<0.025**	**0.88**	*<0.25**		<0.2	0.002	<0.1
	04/20/10	6010B	*<0.1**	<0.1	*<0.01**	<0.03	<0.03	0.42	*<0.025**	**1.6**	*<0.25**		<0.2	0.00197	<0.25

8.15.2 EVAPORATION PONDS (EP-1 thru EP-12B)
Total Metals Analytical Result Summary

STANDARDS			PARAMETERS												
			Arsenic (mg/L)	Barium (mg/L)	Cadmium (mg/L)	Chromium (mg/L)	Copper (mg/L)	Iron (mg/L)	Lead (mg/L)	Manganese (mg/L)	Selenium (mg/L)	Silver (mg/L)	Mercury (ug/L)	Uranium (mg/L)	Zinc (mg/L)
WQCC 20 NMAC 6.2.3103 (DEC 2018)			**0.01**	**2**	**0.01**	**0.05**	**1**	**1**	**0.015**	**0.2**	**0.05**	**0.05**	**2**	**0.03**	**10**
40 CFR 141.62 MCL			0.01	2.0	0.005	0.1	1.3	NE	0.015	NE	0.05	NE	2	0.03	NE
NMED Tap Water (Rev 2. JUN 2019)			0.000855	3.28	0.00624	0.0057	0.7898	13.8	NE	2.02	0.0987	0.0812	0.626	0.0592	5.96
EPA RSL for Tap Water (NOV 2019)			0.000052	3.8	0.0092	22	0.8	14	0.015	0.43	0.1	0.094	0.63	0.004	6
POND ID	**DATE SAMPLED**	**METHOD**													
EP-12A	11/21/19	200.7/200.8	**0.013**	0.19	<0.002	0.018	0.012	**12**	0.00061	**3.1**	<0.01	0.0022	<0.2	0.0019	0.022
	4/29/2019[2]	--	Not sampled - dry												
	09/07/18	200.7/200.8	**0.052**	0.19	NM	0.018	0.012	**12**	0.0054	**3.1**	0.022	NM	<0.2	0.017	0.021
	02/23/18	200.7/200.8	**0.022**	0.1	<0.00058	<0.03	<0.006	0.71	<0.01	0.1	<0.02	0.0084	0.041	<0.01	<0.05
	10/24/17	200.7/200.8	**0.036**	0.21	<0.002	0.013	<0.006	0.54	<0.005	0.2	*<0.1**		<0.2	0.0028	0.0088
	03/30/17	200.7/200.8	**0.026**	0.12	<0.002	0.0079	<0.006	0.7	0.0005	**0.41**	0.048		0.06	0.0011	0.0074
	08/30/16	200.7/200.8	**0.017**	0.11	<0.002	0.0092	<0.006	**1.1**	<0.005	**0.38**	0.028		0.093	0.0022	0.018
	03/02/16	200.7/200.8	**0.021**	0.16	<0.002	0.011	<0.006	**2.3**	*<0.025**	**0.39**	0.022		<0.2	0.0041	0.015
	09/01/15	200.7/200.8	**0.029**	0.099	<0.002	0.02	<0.006	0.28	<0.0025	0.14	0.038		<0.2	0.0029	<0.01
	03/25/15	200.7/200.8	**0.019**	0.076	<0.002	0.012	<0.006	0.6	<0.01	0.095	*<0.2**		<0.2	<0.01	0.015
	11/12/14	200.7/200.8	*<0.05**	0.14	<0.002	0.018	<0.006	**4.1**	*<0.05**	**0.44**	*<0.05**		<0.2	*<0.05**	0.019
	03/05/14	200.7/200.8	**0.019**	0.059	<0.002	0.014	<0.006	**1.9**	<0.01	**0.95**	0.02		<0.2	<0.01	0.021
	10/15/13	200.7/200.8	*<0.05**	0.072	<0.002	0.011	<0.006	0.65	*<0.05**	**0.38**	*<0.05**		<0.2	*<0.05**	0.016
	05/28/13	200.7/200.8	**0.018**	0.054	<0.002	0.012	<0.006	0.67	<0.01	**0.23**	<0.02		<0.2	<0.01	0.015
	11/06/12	200.7/200.8	**0.015**	0.053	<0.002	<0.006	<0.006	0.86	<0.005	**0.32**	0.013		<0.2	<0.0025	0.02
	05/29/12	200.7/200.8	**0.025**	0.083	<0.002	0.0097	<0.006	0.52	<0.005	**0.75**	0.017		<0.2	<0.0025	0.016
	11/01/11	200.7/200.8	0.0085	0.065	<0.002	0.0067	<0.006	**1.9**	<0.005	0.14	0.0063		0.35	<0.005	0.04
	05/23/11	200.7/200.8	**0.024**	0.061	<0.002	0.02	<0.006	0.22	<0.005	**0.32**	*<0.05**		<0.2	<0.0025	0.016
	11/16/10	6010B	*<0.1**	<0.1	*<0.01**	<0.03	<0.03	**1.1**	*<0.025**	**0.4**	*<0.25**		<0.2	0.002	<0.1
	04/20/10	6010B	*<0.1**	<0.1	*<0.01**	<0.03	<0.03	0.92	*<0.025**	**0.28**	*<0.25**		<0.2	0.00175	<0.25

8.15.2 EVAPORATION PONDS (EP-1 thru EP-12B)

Total Metals Analytical Result Summary

STANDARDS			PARAMETERS												
			Arsenic (mg/L)	Barium (mg/L)	Cadmium (mg/L)	Chromium (mg/L)	Copper (mg/L)	Iron (mg/L)	Lead (mg/L)	Manganese (mg/L)	Selenium (mg/L)	Silver (mg/L)	Mercury (ug/L)	Uranium (mg/L)	Zinc (mg/L)
WQCC 20 NMAC 6.2.3103 (DEC 2018)			**0.01**	**2**	**0.01**	**0.05**	**1**	**1**	**0.015**	**0.2**	**0.05**	**0.05**	**2**	**0.03**	**10**
40 CFR 141.62 MCL			0.01	2.0	0.005	0.1	1.3	NE	0.015	NE	0.05	NE	2	0.03	NE
NMED Tap Water (Rev 2. JUN 2019)			0.000855	3.28	0.00624	0.0057	0.7898	13.8	NE	2.02	0.0987	0.0812	0.626	0.0592	5.96
EPA RSL for Tap Water (NOV 2019)			0.000052	3.8	0.0092	22	0.8	14	0.015	0.43	0.1	0.094	0.63	0.004	6
POND ID	**DATE SAMPLED**	**METHOD**													
EP-12B	11/21/19	200.7/200.8	0.0098	0.14	<0.002	0.013	0.0048	**8**	<0.0025	**0.4**	0.0037	<0.005	<0.2	0.0025	0.032
	04/29/19	200.7/200.8	**0.021**	0.097	<0.002	0.0028	0.0041	0.49	0.00038	0.11	0.0078	0.0044	<0.2	0.0018	<0.01
	09/07/18	200.7/200.8	**0.017**	0.16	NM	0.0038	<0.006	0.18	<0.005	**0.27**	0.0059	NM	0.11	0.0017	0.0035
	02/22/18	200.7/200.8	**0.013**	0.15	<0.00058	0.0042	0.0043	**1.1**	<0.0025	**0.23**	<0.02	0.0059	0.065	0.00098	0.013
	10/24/17	200.7/200.8	**0.012**	0.17	<0.002	0.0042	<0.006	0.85	<0.005	**0.31**	*<0.1**		<0.2	<0.005	0.016
	03/30/17	200.7/200.8	**0.017**	0.21	<0.002	0.0083	<0.006	0.93	0.00087	**0.37**	0.03		0.096	0.0012	0.018
	08/30/16	200.7/200.8	**0.018**	0.17	<0.002	0.015	<0.006	**5.8**	<0.005	**0.47**	0.03		<0.2	0.0017	0.043
	03/02/16	200.7/200.8	**0.013**	0.2	<0.002	0.014	<0.006	**3.7**	0.0035	**0.38**	0.024		0.054	0.0047	0.025
	09/01/15	200.7/200.8	**0.014**	0.13	<0.002	0.013	<0.006	0.55	<0.0025	**0.26**	0.017		<0.2	0.0035	0.015
	03/25/15	200.7/200.8	**0.018**	0.1	<0.002	0.011	<0.006	**1.1**	<0.01	**0.22**	*<0.2**		<0.2	<0.01	0.02
	11/12/14	200.7/200.8	*<0.05**	0.087	<0.002	0.011	<0.006	**1.4**	*<0.05**	**0.27**	*<0.05**		<0.2	*<0.05**	0.019
	03/05/14	200.7/200.8	**0.014**	0.08	<0.002	0.013	<0.006	**1.2**	<0.01	**0.55**	0.014		<0.2	<0.01	0.014
	10/15/13	200.7/200.8	**0.011**	0.08	<0.002	0.0076	<0.006	0.38	<0.01	0.2	0.012		<0.2	<0.01	0.023
	05/28/13	200.7/200.8	**0.013**	0.049	<0.002	0.013	<0.006	**1.3**	<0.01	**0.25**	<0.02		<0.2	<0.01	0.025
	11/06/12	200.7/200.8	0.0092	0.04	<0.002	0.0069	<0.006	**1.6**	<0.005	**0.47**	0.0089		0.42	<0.0025	0.031
	05/29/12	200.7/200.8	**0.016**	0.072	<0.002	<0.006	<0.006	0.32	<0.005	0.12	0.017		<0.2	<0.0025	<0.01
	11/01/11	200.7/200.8	0.0076	0.063	<0.002	0.0073	<0.006	**2.4**	<0.005	0.13	0.006		0.55	<0.005	0.059
	05/23/11	200.7/200.8	**0.016**	0.05	<0.002	0.022	<0.006	0.59	<0.005	**0.29**	*<0.05**		<0.2	<0.0025	0.02
	11/16/10	6010B	*<0.1**	<0.1	*<0.01**	<0.03	<0.03	0.84	*<0.025**	0.15	*<0.25**		<0.2	<0.001	<0.25
	04/20/10	6010B	*<0.1**	<0.1	*<0.01**	<0.03	<0.03	**4.2**	*<0.025**	**0.35**	*<0.25**		<0.2	0.00291	<0.25

DEFINITIONS

NE = Not established

NA = Not analyzed

Bold and highlighted values represent values above the applicable standards

STANDARDS

WQCC 20 NMAC 6.2.3103 - Standards for Ground Water of 10,000 mg/l TDS Concentration or Less.

a) Human Health Standards; b) Other Standards for Domestic Water

40 CFR 141.62 Maximum Contaminant Levels for Inorganic Contaminants

NMED Risk Assessment Guidance for Investigations and Remediations Table A-1

EPA Regional Screening Level (RSL) Summary Table

NOTES

Ponds marked in red were not sampled because the pond was dry

Items notes with a * and italics have a detection limit greater than or equal to the applicable standard.

1) Pond 6 is combined with ponds 4 and 5 as one pond.

8.15.3 EVAPORATION PONDS (EP-1 thru EP-12B)

Dissolved Metals Analytical Result Summary

			PARAMETERS											
STANDARDS			Arsenic (mg/L)	Barium (mg/L)	Cadmium (mg/L)	Chromium (mg/L)	Copper (mg/L)	Iron (mg/L)	Lead (mg/L)	Manganese (mg/L)	Selenium (mg/L)	Silver (mg/L)	Uranium (mg/L)	Zinc (mg/L)
WQCC 20 NMAC 6.2.3103 (DEC 2018)			**0.01**	**2**	**0.005**	**0.05**	**1**	**1**	**0.015**	**0.2**	**0.05**	**0.05**	**0.03**	**10**
40 CFR 141.62 MCL			0.01	2	0.005	0.1	1.3	NE	0.015	NE	0.05	NE	0.03	NE
NMED Tap Water (Rev 2. JUN 2019)			0.000855	3.28	0.00624	0.0057	0.7898	13.8	NE	2.02	0.0987	0.0812	0.0592	5.96
EPA RSL for Tap Water (NOV 2019)			0.000052	3.8	0.0092	22	0.8	14	0.015	0.43	0.1	0.094	0.004	6
POND ID	**DATE SAMPLED**	**METHOD**												
EP-1			*Not sampled - no longer in service*											
	11/12/14	200.7/200.8	*0.0093*	0.16	<0.002	<0.002	<0.006	0.64	<0.0025	**0.31**	0.014	<0.005	<0.0025	0.031
	03/05/14	200.7/200.8	*<0.01**	0.13	<0.002	0.018	<0.006	0.78	<0.01	**0.53**	<0.01	<0.005	<0.01	0.021
	10/15/13	200.7/200.8	0.01	0.1	<0.002	0.017	<0.006	0.42	<0.005	**0.45**	<0.01	*<0.05**	<0.01	0.017
	05/28/13	200.7/200.8	*<0.01**	0.061	*<0.01**	<0.03	<0.03	0.25	<0.01	**0.43**	<0.01	<0.025	<0.01	<0.05
	11/06/12	200.7/200.8	0.0088	0.034	<0.002	0.0073	<0.006	**2.2**	<0.005	**0.66**	0.0072	<0.005	0.0011	0.099
	05/29/12	200.7/200.8	0.0084	0.046	<0.002	<0.006	<0.006	0.76	<0.005	0.15	0.011	<0.005	<0.005	0.074
	11/01/11	200.7/200.8	0.0047	0.012	<0.002	<0.006	<0.006	1	<0.005	0.12	0.015	<0.005	<0.002	0.059
	05/23/11	200.7/200.8	*<0.01**	0.014	*<0.01**	0.047	<0.03	**15**	*<0.025**	**0.34**	*<0.25**	<0.025	<0.005	0.13
	11/16/10	6010B	*<0.1**	<0.1	*<0.1**	<0.03	<0.03	**4.3**	*<0.025**	0.15	*<0.25**	<0.025	<0.001	<0.25
	08/02/10	6010B	*<0.02**	0.072	<0.002	0.013	<0.006	**2.5**	<0.005	**0.36**	*<0.05**	<0.025	<0.001	0.096
	04/20/10	6010B	*<0.02**	0.085	<0.002	0.019	0.0091	**29**	<0.005	**0.24**	**0.066**	<0.005	0.00442	0.28
EP-2	11/21/19	200.7/200.8	0.0079	0.4	<0.002	0.0089	0.004	**2.7**	<0.0025	0.15	0.0063	0.0022	0.00065	0.064
	04/30/19	200.7/200.8	0.0047	0.25	<0.002	0.0018	<0.006	0.3	<0.0025	**0.27**	0.0049	0.0036	0.0014	0.026
	09/06/18	200.7/200.8	0.0091	0.16	<0.002	0.0016	<0.006	0.095	<0.0025	**0.22**	<0.005	0.0068	0.0013	0.0066
	02/21/18	200.7/200.8	0.0064	0.14	<0.002	<0.006	<0.006	0.47	0.00028	0.16	0.0075	0.0037	0.00048	0.013
	10/24/17	200.7/200.8	0.0093	0.16	<0.002	0.0054	<0.006	0.64	<0.0025	**0.31**	0.014	<0.005	<0.0025	0.031
	03/30/17	200.7/200.8	**0.015**	0.22	<0.002	0.013	<0.006	**1.1**	<0.0025	**0.34**	0.026	<0.005	0.0013	0.017
	08/29/16	200.7/200.8	**0.018**	0.12	<0.002	0.012	<0.006	**3**	<0.0025	**0.44**	**0.053**	<0.005	0.0014	0.052
	03/02/16	200.7/200.8	0.0098	0.13	<0.002	0.0069	<0.006	0.63	0.00039	**0.22**	0.017	<0.005	0.0044	0.016
	09/01/15	200.7/200.8	0.0098	0.13	<0.002	0.012	<0.006	0.37	<0.0025	**0.3**	0.011	<0.005	0.0031	0.02
	03/24/15	200.7/200.8	*<0.01**	0.13	<0.002	0.017	<0.006	**4**	*<0.2**	**0.37**	*<0.1**	<0.005	<0.01	0.086
	11/12/14	200.7/200.8	**0.011**	0.076	<0.002	0.0099	<0.006	**1.4**	<0.01	**0.21**	<0.01	<0.005	<0.01	0.056
	03/05/14	200.7/200.8	*<0.01**	0.13	*<0.005**	0.016	<0.006	0.72	<0.01	**0.38**	0.042	<0.005	<0.01	0.01
	10/15/13	200.7/200.8	*<0.01**	0.085	<0.002	0.0071	<0.006	0.27	<0.005	0.19	0.011	<0.005	<0.01	0.017
	05/28/13	200.7/200.8	**0.012**	0.059	*<0.01**	<0.03	<0.03	**3.2**	<0.01	**0.48**	0.024	<0.025	<0.01	0.092
	11/06/12	200.7/200.8	0.01	0.034	<0.002	0.012	<0.006	**1.2**	<0.005	**0.36**	0.0041	<0.005	<0.001	0.045
	05/29/12	200.7/200.8	**0.011**	0.06	<0.002	<0.006	<0.006	0.46	<0.005	0.15	0.011	<0.005	<0.005	0.024
	11/01/11	200.7/200.8	0.0058	0.042	<0.002	0.0065	<0.006	**1.1**	<0.005	0.11	0.0057	<0.005	<0.002	0.044
	05/23/11	200.7/200.8	**0.014**	0.026	*<0.01**	<0.03	<0.03	**1.7**	*<0.025**	**0.33**	*<0.25**	<0.025	<0.005	<0.05
	11/16/10	6010B	*<0.1**	<0.1	*<0.01**	<0.03	<0.03	0.71	*<0.025**	0.18	*<0.25**	<0.025	<0.001	<0.25
	08/02/10	6010B	*<0.1**	<0.1	*<0.01**	<0.03	<0.03	**2.2**	*<0.025**	**0.27**	*<0.25**	<0.025	<0.001	<0.25
	04/20/10	6010B	*<0.02**	0.057	<0.002	0.013	<0.006	**9.7**	<0.005	**0.34**	*<0.25**	<0.005	0.0046	0.12

8.15.3 EVAPORATION PONDS (EP-1 thru EP-12B)

Dissolved Metals Analytical Result Summary

			PARAMETERS											
STANDARDS			Arsenic (mg/L)	Barium (mg/L)	Cadmium (mg/L)	Chromium (mg/L)	Copper (mg/L)	Iron (mg/L)	Lead (mg/L)	Manganese (mg/L)	Selenium (mg/L)	Silver (mg/L)	Uranium (mg/L)	Zinc (mg/L)
WQCC 20 NMAC 6.2.3103 (DEC 2018)			**0.01**	**2**	**0.005**	**0.05**	**1**	**1**	**0.015**	**0.2**	**0.05**	**0.05**	**0.03**	**10**
40 CFR 141.62 MCL			0.01	2	0.005	0.1	1.3	NE	0.015	NE	0.05	NE	0.03	NE
NMED Tap Water (Rev 2. JUN 2019)			0.000855	3.28	0.00624	0.0057	0.7898	13.8	NE	2.02	0.0987	0.0812	0.0592	5.96
EPA RSL for Tap Water (NOV 2019)			0.000052	3.8	0.0092	22	0.8	14	0.015	0.43	0.1	0.094	0.004	6
POND ID	**DATE SAMPLED**	**METHOD**												
EP-3	11/20/19	200.7/200.8	0.0057	0.15	<0.002	*<0.06**	<0.06	**6.8**	<0.0025	**0.35**	0.0061	*<0.05**	0.0021	0.055
	04/30/19	200.7/200.8	0.0066	0.24	<0.002	0.0016	0.0039	0.33	<0.0025	**0.34**	0.0085	0.0044	0.0018	0.045
	09/06/18	200.7/200.8	0.01	0.15	<0.002	<0.006	<0.006	0.083	<0.0025	**0.22**	<0.005	0.0071	0.0011	0.0054
	02/21/18	200.7/200.8	0.0068	0.19	<0.002	<0.006	0.0038	0.44	0.00034	**0.22**	0.0081	0.0054	0.00066	<0.01
	10/24/17	200.7/200.8	**0.011**	0.16	<0.002	0.0053	<0.006	0.64	<0.0025	**0.31**	0.011	<0.005	<0.0025	0.024
	03/30/17	200.7/200.8	**0.016**	0.22	<0.002	0.0072	<0.006	0.69	<0.0025	**0.35**	0.028	<0.005	0.0013	0.016
	08/29/16	200.7/200.8	**0.015**	0.15	<0.002	0.012	<0.006	**2.2**	<0.0025	**0.43**	0.049	<0.005	0.0019	0.041
	03/02/16	200.7/200.8	**0.011**	0.16	<0.002	0.0085	<0.006	0.59	0.00054	**0.36**	0.021	<0.005	0.0037	0.0099
	09/01/15	200.7/200.8	**0.013**	0.19	<0.002	0.014	<0.006	0.21	<0.0025	**0.27**	0.014	<0.005	<0.0025	0.014
	03/24/15	200.7/200.8	*<0.1**	0.13	<0.002	0.0088	<0.006	0.9	*<0.2**	**0.31**	*<0.1**	<0.005	<0.01	0.055
	11/12/14	200.7/200.8	**0.012**	0.1	<0.002	0.0091	<0.006	**1.6**	<0.01	**92**	<0.01	<0.005	<0.01	0.016
	03/05/14	200.7/200.8	*<0.01**	0.13	<0.002	0.013	<0.006	0.65	<0.01	**0.41**	0.021	<0.005	<0.01	<0.01
	10/15/13	200.7/200.8	0.01	0.085	<0.002	0.0073	<0.006	0.2	<0.005	0.15	0.015	*<0.05**	<0.01	0.012
	05/28/13	200.7/200.8	**0.011**	0.088	*<0.01**	<0.03	<0.03	0.41	<0.01	**0.26**	0.013	<0.025	<0.01	0.072
	11/06/12	200.7/200.8	0.0081	0.04	<0.002	0.0065	<0.006	1	<0.005	**0.52**	0.0053	<0.005	0.0014	0.076
	05/29/12	200.7/200.8	**0.014**	0.076	<0.002	<0.006	<0.006	0.22	<0.005	0.1	0.022	<0.005	<0.01	0.033
	11/01/11	200.7/200.8	0.0066	0.053	<0.002	<0.006	<0.006	**1.3**	<0.005	0.12	0.0056	<0.005	<0.005	0.03
	05/23/11	200.7/200.8	**0.014**	0.033	<0.002	0.024	<0.006	**1.5**	<0.005	**0.34**	*<0.05**	<0.005	<0.005	0.033
	11/16/10	6010B	*<0.1**	<0.1	*<0.01**	<0.03	<0.03	0.24	*<0.025**	0.15	*<0.25**	<0.025	<0.001	<0.25
	08/02/10	6010B	*<0.1**	0.12	<0.002	0.0093	<0.006	**1.8**	<0.005	**0.37**	*<0.05**	<0.005	<0.001	<0.05
	04/20/10	6010B	*<0.1**	<0.1	*<0.01**	<0.03	<0.03	0.88	*<0.025**	**0.42**	*<0.25**	<0.005	0.00258	<0.25

8.15.3 EVAPORATION PONDS (EP-1 thru EP-12B)

Dissolved Metals Analytical Result Summary

			PARAMETERS											
STANDARDS			Arsenic (mg/L)	Barium (mg/L)	Cadmium (mg/L)	Chromium (mg/L)	Copper (mg/L)	Iron (mg/L)	Lead (mg/L)	Manganese (mg/L)	Selenium (mg/L)	Silver (mg/L)	Uranium (mg/L)	Zinc (mg/L)
WQCC 20 NMAC 6.2.3103 (DEC 2018)			**0.01**	**2**	**0.005**	**0.05**	**1**	**1**	**0.015**	**0.2**	**0.05**	**0.05**	**0.03**	**10**
40 CFR 141.62 MCL			0.01	2	0.005	0.1	1.3	NE	0.015	NE	0.05	NE	0.03	NE
NMED Tap Water (Rev 2. JUN 2019)			0.000855	3.28	0.00624	0.0057	0.7898	13.8	NE	2.02	0.0987	0.0812	0.0592	5.96
EPA RSL for Tap Water (NOV 2019)			0.000052	3.8	0.0092	22	0.8	14	0.015	0.43	0.1	0.094	0.004	6
POND ID	**DATE SAMPLED**	**METHOD**												
EP-4	11/20/19 [1]		EP-4, EP-5, and EP-6 combined into one sample (see EP-6)											
	04/30/19	200.7/200.8	0.0064	0.24	<0.002	0.0017	0.0015	0.31	<0.0025	**0.34**	0.012	0.0046	0.0018	0.019
	09/06/18	200.7/200.8	**0.012**	0.15	<0.002	0.0016	<0.006	0.088	<0.0025	0.2	<0.005	0.0065	0.00092	0.0064
	02/21/18	200.7/200.8	0.009	0.22	<0.002	<0.006	0.0032	0.42	<0.005	**0.27**	0.0093	0.0072	<0.005	0.0057
	10/24/17	200.7/200.8	**0.013**	0.16	<0.002	0.006	<0.006	0.65	<0.0025	**0.3**	0.013	<0.005	0.0005	0.035
	03/30/17	200.7/200.8	**0.015**	0.22	<0.002	0.009	<0.006	0.61	<0.0025	**0.34**	0.029	<0.005	0.0011	0.035
	08/29/16	200.7/200.8	**0.016**	0.15	<0.002	0.013	<0.006	**1.3**	<0.0025	**0.37**	0.05	<0.005	0.0022	0.036
	03/02/16	200.7/200.8	**0.019**	0.15	<0.002	0.0088	<0.006	0.49	0.00059	**0.43**	0.02	<0.005	0.0035	0.018
	09/01/15	200.7/200.8	**0.014**	0.19	<0.002	0.013	<0.006	0.24	<0.0025	**0.28**	0.018	<0.005	0.0026	0.016
	03/24/15	200.7/200.8	**0.022**	0.12	<0.002	0.0079	<0.006	0.46	*<0.2**	**0.4**	0.038	<0.005	<0.01	<0.01
	11/12/14	200.7/200.8	**0.012**	0.11	<0.002	0.01	<0.006	**1.3**	0.0013	**0.27**	0.011	<0.005	0.0039	0.017
	03/05/14	200.7/200.8	*<0.01**	0.13	<0.002	0.012	<0.006	0.58	<0.01	**0.43**	0.021	<0.005	<0.01	<0.01
	10/15/13	200.7/200.8	**0.012**	0.084	<0.002	<0.006	<0.006	0.26	<0.005	0.15	0.017	*<0.05**	<0.01	0.013
	05/28/13	200.7/200.8	**0.013**	0.085	*<0.01**	<0.03	<0.03	0.31	<0.01	0.19	0.019	<0.025	<0.01	<0.05
	11/06/12	200.7/200.8	0.0076	0.068	<0.002	<0.006	<0.006	0.29	<0.005	**0.59**	<0.01	<0.005	<0.001	0.13
	05/29/12	200.7/200.8	**0.017**	0.06	<0.002	0.0067	<0.006	0.2	<0.005	0.061	0.024	<0.005	<0.005	0.036
	11/01/11	200.7/200.8	0.0086	0.073	<0.002	<0.006	<0.006	0.78	<0.005	0.2	0.0084	<0.005	<0.005	0.022
	05/23/11	200.7/200.8	**0.017**	0.067	<0.002	0.024	<0.006	0.19	<0.005	**0.33**	*<0.05**	<0.005	<0.005	0.019
	11/16/10	6010B	*<0.1**	<0.1	*<0.01**	<0.03	<0.03	0.22	*<0.025**	0.14	*<0.25**	<0.025	<0.001	<0.25
	08/02/10	6010B	*<0.1**	<0.1	*<0.01**	<0.03	<0.03	1	*<0.025**	**0.33**	*<0.25**	<0.025	0.002	<0.25
	04/20/10	6010B	*<0.1**	<0.1	*<0.01**	<0.03	<0.03	0.95	*<0.025**	**0.41**	*<0.25**	<0.005	0.00292	<0.25

8.15.3 EVAPORATION PONDS (EP-1 thru EP-12B)

Dissolved Metals Analytical Result Summary

			PARAMETERS											
STANDARDS			Arsenic (mg/L)	Barium (mg/L)	Cadmium (mg/L)	Chromium (mg/L)	Copper (mg/L)	Iron (mg/L)	Lead (mg/L)	Manganese (mg/L)	Selenium (mg/L)	Silver (mg/L)	Uranium (mg/L)	Zinc (mg/L)
WQCC 20 NMAC 6.2.3103 (DEC 2018)			**0.01**	**2**	**0.005**	**0.05**	**1**	**1**	**0.015**	**0.2**	**0.05**	**0.05**	**0.03**	**10**
40 CFR 141.62 MCL			0.01	2	0.005	0.1	1.3	NE	0.015	NE	0.05	NE	0.03	NE
NMED Tap Water (Rev 2. JUN 2019)			0.000855	3.28	0.00624	0.0057	0.7898	13.8	NE	2.02	0.0987	0.0812	0.0592	5.96
EPA RSL for Tap Water (NOV 2019)			0.000052	3.8	0.0092	22	0.8	14	0.015	0.43	0.1	0.094	0.004	6
POND ID	**DATE SAMPLED**	**METHOD**												
EP-5	11/20/19 [1]		EP-4, EP-5, and EP-6 combined into one sample (see EP-6)											
	04/30/19	200.7/200.8	**0.011**	0.19	<0.002	<0.006	<0.006	0.093	<0.0025	**0.45**	0.0057	0.0055	0.0019	0.016
	09/06/18	200.7/200.8	**0.019**	0.16	<0.002	0.0028	<0.006	0.028	<0.0025	0.15	<0.005	0.0077	0.0012	0.0033
	02/21/18	200.7/200.8	**0.013**	0.22	<0.002	0.0032	<0.006	0.35	<0.005	**0.42**	0.013	0.0074	0.0013	0.0037
	10/24/17	200.7/200.8	**0.019**	0.23	<0.002	0.0079	<0.006	0.2	<0.01	**0.45**	0.018	<0.005	<0.01	0.0034
	03/30/17	200.7/200.8	**0.029**	0.17	<0.002	0.01	<0.006	0.15	<0.0025	**0.62**	**0.051**	<0.005	0.0026	0.024
	08/29/16	200.7/200.8	**0.025**	0.19	<0.002	0.01	<0.006	0.1	<0.01	**0.37**	0.039	<0.005	0.004	0.023
	03/02/16	200.7/200.8	**0.02**	0.15	<0.002	0.0097	<0.006	0.45	<0.01	**0.43**	0.019	<0.005	0.0034	0.02
	09/01/15	200.7/200.8	**0.025**	0.14	<0.002	0.017	<0.006	0.058	<0.005	**0.32**	0.031	<0.005	<0.005	0.014
	03/24/15	200.7/200.8	*<0.2**	0.13	<0.002	0.0075	<0.006	0.51	*<0.2**	**0.44**	*<0.1**	<0.005	<0.01	<0.01
	11/12/14	200.7/200.8	**0.025**	0.13	<0.002	0.0089	<0.006	0.24	*<0.02**	**0.48**	<0.02	<0.005	<0.02	<0.01
	03/05/14	200.7/200.8	**0.012**	0.1	*<0.01**	<0.03	<0.03	0.46	<0.01	**0.55**	0.021	<0.025	<0.01	<0.05
	10/15/13	200.7/200.8	**0.013**	0.089	<0.002	0.0079	<0.006	0.27	<0.005	0.18	0.018	*<0.05**	<0.01	0.012
	05/28/13	200.7/200.8	**0.013**	0.085	*<0.01**	<0.03	<0.03	0.28	<0.01	0.16	0.019	<0.025	*<0.1**	<0.05
	11/06/12	200.7/200.8	0.0075	0.07	<0.002	<0.006	<0.006	0.25	<0.005	**0.45**	*<0.05**	<0.005	<0.001	0.034
	05/29/12	200.7/200.8	**0.017**	0.059	<0.002	0.0069	<0.006	0.19	<0.005	0.065	0.023	<0.005	<0.01	0.023
	11/01/11	200.7/200.8	0.0098	0.085	<0.002	0.007	<0.006	0.3	<0.005	**0.24**	0.0075	<0.005	<0.005	<0.1
	05/23/11	200.7/200.8	**0.018**	0.086	<0.002	0.023	<0.006	0.049	<0.005	**0.21**	*<0.05**	<0.005	<0.005	0.015
	11/16/10	6010B	*<0.1**	<0.1	*<0.01**	0.031	<0.03	0.37	*<0.025**	0.19	*<0.25**	<0.025	<0.001	<0.25
	08/02/10	6010B	*<0.1**	<0.1	*<0.01**	<0.03	<0.03	0.42	*<0.025**	**0.3**	*<0.25**	<0.025	0.003	<0.25
	04/20/10	6010B	*<0.1**	0.12	*<0.01**	<0.03	<0.03	0.71	*<0.025**	**0.49**	*<0.25**	<0.005	0.00271	<0.25

8.15.3 EVAPORATION PONDS (EP-1 thru EP-12B)

Dissolved Metals Analytical Result Summary

			PARAMETERS											
STANDARDS			Arsenic (mg/L)	Barium (mg/L)	Cadmium (mg/L)	Chromium (mg/L)	Copper (mg/L)	Iron (mg/L)	Lead (mg/L)	Manganese (mg/L)	Selenium (mg/L)	Silver (mg/L)	Uranium (mg/L)	Zinc (mg/L)
WQCC 20 NMAC 6.2.3103 (DEC 2018)			**0.01**	**2**	**0.005**	**0.05**	**1**	**1**	**0.015**	**0.2**	**0.05**	**0.05**	**0.03**	**10**
40 CFR 141.62 MCL			0.01	2	0.005	0.1	1.3	NE	0.015	NE	0.05	NE	0.03	NE
NMED Tap Water (Rev 2. JUN 2019)			0.000855	3.28	0.00624	0.0057	0.7898	13.8	NE	2.02	0.0987	0.0812	0.0592	5.96
EPA RSL for Tap Water (NOV 2019)			0.000052	3.8	0.0092	22	0.8	14	0.015	0.43	0.1	0.094	0.004	6
POND ID	DATE SAMPLED	METHOD												
EP-6	11/20/19 [1]	200.7/200.8	**0.017**	0.24	*<0.02**	*<0.06**	0.014	0.45	<0.0025	**0.62**	0.0032	*<0.05**	0.0021	0.033
	04/29/19	200.7/200.8	**0.013**	0.2	<0.002	<0.006	<0.006	0.097	<0.0025	**0.46**	0.005	0.0071	0.0019	0.016
	09/07/18	200.7/200.8	**0.022**	0.15	<0.002	0.0042	<0.006	<0.02	<0.0025	0.13	<0.005	0.0076	0.0012	0.0036
	02/21/18	200.7/200.8	**0.017**	0.21	<0.002	0.005	<0.006	0.27	<0.005	**0.52**	0.015	0.0074	0.0018	<0.01
	10/24/17	200.7/200.8	**0.021**	0.23	<0.002	0.0091	<0.006	0.13	<0.01	**0.47**	0.017	<0.005	0.0024	0.069
	03/30/17	200.7/200.8	**0.031**	0.19	*<0.02**	*<0.06**	<0.06	<0.2	<0.0025	**0.72**	**0.054**	*<0.05**	0.0026	0.042
	08/29/16	200.7/200.8	**0.028**	0.19	<0.002	0.012	<0.006	0.046	<0.005	**0.38**	0.037	<0.005	0.0039	0.24
	03/02/16	200.7/200.8	**0.02**	0.16	<0.002	0.0099	<0.006	0.57	0.00059	**0.46**	0.019	<0.005	0.0037	0.015
	09/01/15	200.7/200.8	**0.03**	0.13	*<0.01**	0.014	<0.03	0.028	<0.005	**0.33**	0.035	<0.005	<0.005	0.014
	03/25/15	200.7/200.8	*<0.2**	0.12	<0.002	0.0079	<0.006	0.4	*<0.2**	**0.39**	*<0.2**	<0.005	<0.01	0.011
	11/12/14	200.7/200.8	**0.027**	0.14	*<0.01**	<0.03	<0.03	0.2	*<0.02**	**0.53**	0.025	<0.025	<0.02	<0.05
	03/05/14	200.7/200.8	**0.015**	0.11	<0.002	0.0091	<0.006	0.45	<0.01	**0.6**	0.024	<0.005	<0.01	0.011
	10/15/13	200.7/200.8	*<0.05**	0.098	<0.002	0.0086	<0.006	0.077	<0.005	**0.22**	*<0.05**	*<0.05**	*<0.05**	<0.01
	05/28/13	200.7/200.8	**0.021**	0.096	*<0.01**	<0.03	<0.03	<0.1	<0.01	0.15	0.02	<0.025	<0.01	0.069
	11/06/12	200.7/200.8	**0.022**	0.11	*<0.02**	*<0.06**	<0.06	0.053	*<0.05**	0.1	0.014	*<0.05**	<0.005	<0.1
	05/29/12	200.7/200.8	**0.02**	0.094	<0.002	0.011	<0.006	0.11	<0.005	**0.41**	0.017	<0.005	<0.01	0.019
	11/01/11	200.7/200.8	**0.02**	0.11	<0.002	0.014	<0.006	0.076	<0.005	0.19	0.011	<0.005	<0.01	0.011
	05/23/11	200.7/200.8	**0.016**	0.11	*<0.01**	<0.03	<0.03	0.13	*<0.025**	0.13	*<0.25**	<0.025	<0.005	<0.05
	11/16/10	6010B	*<0.1**	0.12	*<0.01**	<0.03	<0.03	0.18	*<0.025**	**0.3**	*<0.25**	<0.025	0.001	<0.25
	08/02/10	6010B	*<0.1**	<0.1	*<0.01**	<0.03	<0.03	0.033	*<0.025**	0.045	*<0.25**	<0.025	0.002	<0.25
	04/20/10	6010B	*<0.02**	0.068	<0.002	<0.006	<0.006	0.38	<0.005	**0.43**	*<0.05**	<0.005	0.00169	0.5

8.15.3 EVAPORATION PONDS (EP-1 thru EP-12B)

Dissolved Metals Analytical Result Summary

			PARAMETERS											
STANDARDS			Arsenic (mg/L)	Barium (mg/L)	Cadmium (mg/L)	Chromium (mg/L)	Copper (mg/L)	Iron (mg/L)	Lead (mg/L)	Manganese (mg/L)	Selenium (mg/L)	Silver (mg/L)	Uranium (mg/L)	Zinc (mg/L)
WQCC 20 NMAC 6.2.3103 (DEC 2018)			**0.01**	**2**	**0.005**	**0.05**	**1**	**1**	**0.015**	**0.2**	**0.05**	**0.05**	**0.03**	**10**
40 CFR 141.62 MCL			0.01	2	0.005	0.1	1.3	NE	0.015	NE	0.05	NE	0.03	NE
NMED Tap Water (Rev 2. JUN 2019)			0.000855	3.28	0.00624	0.0057	0.7898	13.8	NE	2.02	0.0987	0.0812	0.0592	5.96
EPA RSL for Tap Water (NOV 2019)			0.000052	3.8	0.0092	22	0.8	14	0.015	0.43	0.1	0.094	0.004	6
POND ID	**DATE SAMPLED**	**METHOD**												
EP-7	11/20/19	200.7/200.8	**0.34**	0.19	*<0.1**	*<0.3**	0.11	*<1.0**	*<0.05**	**1.3**	0.04	*<0.25**	0.0094	<0.5
	04/29/19	200.7/200.8	**0.11**	0.19	*<0.01**	<0.03	0.012	<0.1	<0.01	**0.46**	0.0089	0.016	0.0048	0.03
	09/07/18	200.7/200.8	**0.17**	0.24	*<0.01**	0.02	<0.03	<0.1	*<0.025**	**0.46**	*<0.05**	0.027	0.0051	<0.05
	02/23/18	200.7/200.8	**0.11**	0.22	*<0.02**	<0.03	<0.06	<0.2	*<0.025**	**0.38**	**0.12**	0.033	0.0059	<0.05
	10/24/17	200.7/200.8	**0.13**	0.26	*<0.01**	0.026	<0.03	<0.1	*<0.025**	**1.1**	*<0.2**	<0.025	0.0079	<0.05
	03/30/17	200.7/200.8	**0.16**	0.18	*<0.02**	0.015	<0.06	<0.2	*<0.025**	0.19	**0.28**	*<0.05**	0.0053	0.053
	08/30/16	200.7/200.8	**0.16**	0.2	*<0.01**	0.014	<0.03	<0.1	*<0.025**	**1.3**	**0.18**	<0.025	0.0088	0.03
	03/02/16	200.7/200.8	**0.078**	0.18	*<0.01**	0.009	<0.03	0.52	0.0016	**0.42**	**0.066**	<0.025	0.006	0.02
	09/01/15	200.7/200.8	**0.15**	0.17	*<0.01**	**0.062**	<0.03	<0.1	*<0.05**	**0.38**	**0.18**	<0.025	*<0.05**	<0.05
	03/25/15	200.7/200.8	*<0.2**	0.15	*<0.01**	<0.03	<0.03	<0.1	*<0.2**	**0.53**	*<0.2**	<0.025	<0.01	<0.05
	11/12/14	200.7/200.8	**0.11**	0.19	*<0.01**	<0.03	<0.03	0.35	*<0.02**	**0.8**	*<0.2**	<0.025	<0.02	<0.05
	03/05/14	200.7/200.8	**0.11**	0.11	*<0.01**	<0.03	<0.03	0.15	*<0.1**	**2.1**	**0.13**	<0.025	*<0.1**	<0.05
	10/15/13	200.7/200.8	**0.13**	0.096	*<0.01**	<0.03	<0.03	<0.1	*<0.025**	**0.38**	**0.19**	<0.025	*<0.05**	<0.05
	05/28/13	200.7/200.8	**0.11**	0.11	*<0.01**	<0.03	<0.03	<0.1	*<0.02**	**2.9**	**0.11**	<0.025	<0.02	<0.05
	11/06/12	200.7/200.8	**0.12**	0.14	*<0.02**	*<0.06**	<0.06	<0.2	*<0.05**	**0.72**	*<0.5**	*<0.05**	<0.02	<0.1
	05/29/12	200.7/200.8	**0.081**	0.14	*<0.02**	*<0.06**	<0.06	<0.2	*<0.05**	**0.74**	**0.086**	*<0.05**	<0.02	<0.1
	11/01/11	200.7/200.8	*<0.05**	0.09	*<0.01**	<0.03	<0.03	<0.1	*<0.025**	**0.6**	*<0.05**	<0.025	*<0.05**	<0.05
	05/23/11	200.7/200.8	**0.068**	0.13	*<0.01**	<0.03	<0.03	<0.1	*<0.025**	**1.9**	*<0.25**	<0.025	<0.01	<0.05
	11/16/10	6010B	*<0.2**	<0.2	*<0.02**	*<0.06**	<0.06	0.19	*<0.05**	**2.3**	*<0.5**	*<0.05**	0.003	<0 .5
	08/02/10	6010B	*<0.4**	<0.4	*<0.04**	*<0.12**	<0.12	<0.2	*<0.1**	**3.4**	*<1.0**	*<0.1**	0.003	<1.0
	04/20/10	6010B	*<0.1**	<0.1	*<0.01**	<0.03	<0.03	<0.1	*<0.025**	**2.5**	*<0.25**	<0.025	0.00228	<0.25

8.15.3 EVAPORATION PONDS (EP-1 thru EP-12B)

Dissolved Metals Analytical Result Summary

			PARAMETERS											
STANDARDS			Arsenic (mg/L)	Barium (mg/L)	Cadmium (mg/L)	Chromium (mg/L)	Copper (mg/L)	Iron (mg/L)	Lead (mg/L)	Manganese (mg/L)	Selenium (mg/L)	Silver (mg/L)	Uranium (mg/L)	Zinc (mg/L)
WQCC 20 NMAC 6.2.3103 (DEC 2018)			**0.01**	**2**	**0.005**	**0.05**	**1**	**1**	**0.015**	**0.2**	**0.05**	**0.05**	**0.03**	**10**
40 CFR 141.62 MCL			0.01	2	0.005	0.1	1.3	NE	0.015	NE	0.05	NE	0.03	NE
NMED Tap Water (Rev 2. JUN 2019)			0.000855	3.28	0.00624	0.0057	0.7898	13.8	NE	2.02	0.0987	0.0812	0.0592	5.96
EPA RSL for Tap Water (NOV 2019)			0.000052	3.8	0.0092	22	0.8	14	0.015	0.43	0.1	0.094	0.004	6
POND ID	**DATE SAMPLED**	**METHOD**												
EP-8	11/20/19	200.7/200.8	**0.32**	0.22	*<0.1**	*<0.3**	0.15	*<1.0**	*<0.05**	**4.3**	**0.054**	*<0.25**	*<0.05**	<0.5
	04/29/19	200.7/200.8	**0.11**	0.19	*<0.01**	<0.03	0.014	<0.1	<0.01	**0.45**	0.014	0.019	0.005	0.019
	09/07/18	200.7/200.8	**0.093**	0.24	*<0.01**	0.011	<0.03	<0.02	<0.01	**0.94**	*<0.05**	0.022	0.003	<0.05
	02/23/18	200.7/200.8	**0.1**	0.23	*<0.01**	*<0.3**	<0.03	0.15	*<0.025**	**0.45**	**0.099**	*<0.25**	0.0054	<0.05
	10/24/17	200.7/200.8	**0.11**	0.26	*<0.01**	0.031	<0.03	<0.1	*<0.025**	**1.1**	*<0.2**	<0.025	0.0077	<0.05
	03/30/17	200.7/200.8	**0.12**	0.2	*<0.02**	0.017	<0.06	<0.2	<0.0041	0.13	**0.31**	*<0.05**	<0.025	0.071
	08/30/16	200.7/200.8	**0.18**	0.2	*<0.01**	0.014	<0.03	<0.1	*<0.025**	**1.4**	**0.22**	<0.025	0.0096	0.027
	09/01/15	200.7/200.8	**0.15**	0.17	*<0.01**	0.035	<0.03	<0.1	*<0.05**	**0.38**	**0.18**	<0.025	*<0.05**	0.051
	03/25/15	200.7/200.8	*<0.2**	0.15	*<0.01**	<0.03	<0.03	<0.1	*<0.2**	**0.53**	*<0.2**	<0.025	<0.01	<0.05
	11/12/14	200.7/200.8	**0.11**	0.17	*<0.01**	<0.03	<0.03	0.23	*<0.02**	**0.77**	*<0.2**	<0.025	<0.02	<0.05
	03/05/14	200.7/200.8	**0.11**	0.11	*<0.01**	<0.03	<0.03	0.14	*<0.1**	**2.1**	**0.12**	<0.025	*<0.1**	<0.05
	10/15/13	200.7/200.8	**0.37**	0.22	*<0.01**	0.039	<0.03	<0.1	**0.064**	**18**	**0.47**	*<0.1**	*<0.05**	<0.05
	05/28/13	200.7/200.8	**0.11**	0.12	*<0.01**	<0.03	<0.03	<0.1	*<0.02**	**3**	**0.088**	<0.025	<0.02	<0.05
	11/06/12	200.7/200.8	**0.47**	0.26	*<0.04**	*<0.12**	<0.12	<0.4	*<0.1**	**36**	*<1.0**	*<0.1**	0.0011	<0.2
	05/29/12	200.7/200.8	**0.16**	0.18	*<0.02**	*<0.06**	<0.06	<0.2	*<0.05**	**7.3**	**0.13**	*<0.05**	<0.02	<0.1
	11/01/11	200.7/200.8	**0.05**	0.13	*<0.01**	<0.03	<0.03	<0.1	*<0.025**	**1.1**	0.03	<0.025	<0.02	<0.05
	05/23/11	200.7/200.8	**0.38**	0.25	*<0.02**	*<0.06**	<0.06	<0.1	*<0.05**	**20**	*<0.5**	*<0.05**	*<0.05**	<0.1
	11/16/10	6010B	*<0.4**	<0.4	*<0.04**	*<0.12**	<0.12	0.11	*<0.1**	**9.1**	*<1.0**	*<0.1**	0.003	1
	08/02/10	6010B	**0.77**	<0.4	*<0.04**	*<0.12**	<0.12	<0.2	*<0.1**	**22**	*<1.0**	*<0.1**	0.001	1
	04/20/10	6010B	*<0.2**	<0.2	*<0.02**	*<0.06**	<0.06	0.26	*<0.05**	**10**	*<0.05**	*<0.05**	0.00166	<0.5

8.15.3 EVAPORATION PONDS (EP-1 thru EP-12B)

Dissolved Metals Analytical Result Summary

			PARAMETERS											
STANDARDS			Arsenic (mg/L)	Barium (mg/L)	Cadmium (mg/L)	Chromium (mg/L)	Copper (mg/L)	Iron (mg/L)	Lead (mg/L)	Manganese (mg/L)	Selenium (mg/L)	Silver (mg/L)	Uranium (mg/L)	Zinc (mg/L)
WQCC 20 NMAC 6.2.3103 (DEC 2018)			**0.01**	**2**	**0.005**	**0.05**	**1**	**1**	**0.015**	**0.2**	**0.05**	**0.05**	**0.03**	**10**
40 CFR 141.62 MCL			0.01	2	0.005	0.1	1.3	NE	0.015	NE	0.05	NE	0.03	NE
NMED Tap Water (Rev 2. JUN 2019)			0.000855	3.28	0.00624	0.0057	0.7898	13.8	NE	2.02	0.0987	0.0812	0.0592	5.96
EPA RSL for Tap Water (NOV 2019)			0.000052	3.8	0.0092	22	0.8	14	0.015	0.43	0.1	0.094	0.004	6
POND ID	**DATE SAMPLED**	**METHOD**												
EP-9	11/20/19	200.7/200.8	**0.11**	0.16	*<0.1**	*<0.3**	0.13	*<1.0**	*<0.025**	**1.9**	0.042	*<0.25**	*<0.05**	<0.5
	04/29/19	200.7/200.8	**0.079**	0.18	*<0.01**	<0.03	0.018	0.076	<0.01	**0.34**	0.0035	0.017	0.0053	0.041
	09/07/18	200.7/200.8	**0.086**	0.17	*<0.01**	<0.03	<0.03	<0.1	*<0.025**	**0.72**	*<0.05**	0.021	<0.025	<0.05
	02/23/18	200.7/200.8	*<0.2**	0.21	*<0.01**	<0.03	<0.03	0.13	<0.005	**1.2**	*<0.2**	0.022	0.0033	<0.05
	10/24/17	200.7/200.8	**0.21**	0.26	*<0.02**	0.026	<0.06	<0.2	*<0.05**	**4.5**	*<1.0**	*<0.05**	*<0.05**	0.043
	03/30/17	200.7/200.8	**0.1**	0.27	*<0.02**	*<0.06**	<0.06	<0.2	*<0.025**	**1.1**	**0.12**	*<0.05**	0.0025	0.081
	08/30/16	200.7/200.8	**0.27**	0.31	*<0.02**	*<0.06**	<0.06	<0.2	*<0.05**	**1.9**	**0.29**	<0.025	0.008	0.048
	03/02/16	200.7/200.8	**0.12**	0.22	*<0.01**	<0.03	<0.03	0.048	*<0.05**	0.068	**0.094**	<0.025	0.0063	0.03
	09/01/15	200.7/200.8	**0.12**	0.2	*<0.01**	**0.064**	<0.03	<0.1	*<0.05**	**0.35**	**0.15**	<0.025	*<0.05**	<0.05
	03/25/15	200.7/200.8	*<0.2**	0.17	*<0.01**	<0.03	<0.03	<0.1	*<0.2**	**0.52**	*<0.2**	<0.025	<0.01	0.079
	11/13/14	200.7/200.8	**0.16**	0.25	*<0.01**	<0.03	<0.03	<0.1	*<0.05**	0.18	*<0.5**	<0.025	*<0.05**	0.051
	03/05/14	200.7/200.8	**0.1**	0.19	*<0.01**	<0.03	<0.03	0.14	*<0.1**	**2.8**	**0.13**	<0.025	*<0.1**	<0.05
	10/15/13	200.7/200.8	**0.1**	0.19	*<0.01**	<0.03	<0.03	<0.1	*<0.025**	**3.3**	**0.15**	<0.025	*<0.05**	<0.05
	05/28/13	200.7/200.8	**0.07**	0.19	*<0.01**	<0.03	<0.03	<0.01	*<0.02**	**3**	**0.091**	*<0.05**	<0.02	<0.05
	11/06/12	200.7/200.8	**0.048**	0.17	*<0.02**	*<0.06**	<0.06	<0.2	*<0.05**	**0.92**	*<0.5**	*<0.05**	<0.01	<0.1
	05/29/11	200.7/200.8	**0.086**	0.18	*<0.02**	*<0.06**	<0.06	<0.2	*<0.05**	**4.8**	**0.084**	*<0.05**	<0.02	<0.1
	11/01/11	200.7/200.8	**0.089**	0.2	*<0.01**	<0.03	<0.03	<0.1	*<0.025**	**1.3**	**0.057**	<0.025	*<0.05**	<0.05
	05/23/11	200.7/200.8	**0.083**	0.21	*<0.01**	<0.03	<0.03	<0.1	*<0.025**	**6.8**	*<0.25**	<0.025	<0.02	<0.05
	11/16/10	6010B	*<0.4**	<0.4	*<0.04**	*<0.12**	<0.12	<0.4	*<0.1**	**5.3**	*<1.0**	*<0.1**	0.003	<1.0
	04/20/10	6010B	*<0.2**	0.14	*<0.01**	<0.03	<0.03	0.17	*<0.025**	**2.6**	*<0.25**	<0.025	0.00221	<0.25

8.15.3 EVAPORATION PONDS (EP-1 thru EP-12B)

Dissolved Metals Analytical Result Summary

			PARAMETERS											
STANDARDS			Arsenic (mg/L)	Barium (mg/L)	Cadmium (mg/L)	Chromium (mg/L)	Copper (mg/L)	Iron (mg/L)	Lead (mg/L)	Manganese (mg/L)	Selenium (mg/L)	Silver (mg/L)	Uranium (mg/L)	Zinc (mg/L)
WQCC 20 NMAC 6.2.3103 (DEC 2018)			**0.01**	**2**	**0.005**	**0.05**	**1**	**1**	**0.015**	**0.2**	**0.05**	**0.05**	**0.03**	**10**
40 CFR 141.62 MCL			0.01	2	0.005	0.1	1.3	NE	0.015	NE	0.05	NE	0.03	NE
NMED Tap Water (Rev 2. JUN 2019)			0.000855	3.28	0.00624	0.0057	0.7898	13.8	NE	2.02	0.0987	0.0812	0.0592	5.96
EPA RSL for Tap Water (NOV 2019)			0.000052	3.8	0.0092	22	0.8	14	0.015	0.43	0.1	0.094	0.004	6
POND ID	**DATE SAMPLED**	**METHOD**												
EP-11	11/21/2019[2]	--	Not sampled - dry											
	04/29/19	200.7/200.8	**0.11**	0.19	*<0.01**	<0.03	0.02	<0.1	*<0.025**	**0.41**	0.011	0.018	0.0059	0.032
	09/07/18	200.7/200.8	**0.86**	0.027	*<0.01**	0.047	<0.03	0.09	*<0.1**	**12**	*<0.1**	0.014	*<0.1**	0.021
	02/23/18	200.7/200.8	**0.15**	0.19	*<0.02**	<0.03	<0.06	0.2	*<0.025**	**0.9**	*<0.2**	0.027	0.0052	<0.05
	10/24/17	200.7/200.8	**0.25**	0.21	*<0.02**	**0.058**	<0.06	0.38	*<0.05**	**2.3**	*<1.0**	*<0.05**	0.011	<0.1
	03/30/17	200.7/200.8	**0.15**	0.2	*<0.02**	0.014	<0.060	<0.20	*<0.025**	**0.37**	**0.27**	*<0.05**	0.0053	0.055
	08/30/16	200.7/200.8	**0.16**	0.19	*<0.01**	0.016	<0.03	<0.1	*<0.025**	**1.4**	**0.21**	<0.025	0.0091	0.045
	03/02/16	200.7/200.8	**0.076**	0.2	*<0.01**	<0.03	<0.03	0.22	0.0023	**0.42**	**0.088**	<0.025	0.0057	0.028
	09/01/15	200.7/200.8	**0.15**	0.16	*<0.01**	0.042	<0.03	<0.1	*<0.05**	**0.44**	**0.17**	<0.025	*<0.05**	<0.05
	03/25/15	200.7/200.8	*<0.2**	0.15	*<0.01**	<0.03	<0.03	<0.2	*<0.2**	**0.45**	*<0.2**	<0.025	<0.01	<0.05
	11/12/14	200.7/200.8	**0.1**	0.16	*<0.01**	<0.03	<0.03	0.31	*<0.02**	**1**	*<0.5**	<0.025	*<0.05**	0.061
	03/05/14	200.7/200.8	**0.04**	0.074	<0.002	0.011	<0.006	0.48	<0.01	**0.99**	0.039	<0.025	<0.01	0.013
	10/15/13	200.7/200.8	*<0.05**	0.067	<0.002	0.0096	<0.006	0.21	<0.005	**0.41**	*<0.05**	*<0.05**	*<0.05**	<0.01
	05/28/13	200.7/200.8	**0.04**	0.068	*<0.01**	<0.03	<0.03	<0.1	<0.01	**0.48**	0.022	<0.025	<0.01	<0.05
	11/06/12	200.7/200.8	**0.013**	0.056	<0.002	<0.006	<0.006	0.79	<0.005	**0.4**	0.011	<0.005	0.0012	0.043
	05/29/11	200.7/200.8	**0.03**	0.081	<0.002	0.011	<0.006	0.16	<0.005	**0.78**	0.019	<0.005	<0.01	0.023
	11/01/11	200.7/200.8	0.008	0.068	<0.002	<0.006	<0.006	0.89	<0.005	0.19	0.0079	<0.005	<0.005	0.015
	05/23/11	200.7/200.8	**0.055**	0.087	*<0.01**	<0.03	<0.03	0.066	*<0.025**	**0.89**	*<0.25**	<0.025	<0.01	<0.05
	11/16/10	6010B	*<0.1**	0.12	*<0.01**	<0.03	<0.03	0.48	*<0.025**	**0.64**	*<0.25**	<0.025	0.002	<0.25
	04/20/10	6010B	*<0.1**	<0.1	*<0.01**	<0.03	<0.03	0.15	*<0.025**	**1.6**	*<0.25**	<0.025	0.00211	<0.25

8.15.3 EVAPORATION PONDS (EP-1 thru EP-12B)

Dissolved Metals Analytical Result Summary

			PARAMETERS											
STANDARDS			Arsenic (mg/L)	Barium (mg/L)	Cadmium (mg/L)	Chromium (mg/L)	Copper (mg/L)	Iron (mg/L)	Lead (mg/L)	Manganese (mg/L)	Selenium (mg/L)	Silver (mg/L)	Uranium (mg/L)	Zinc (mg/L)
WQCC 20 NMAC 6.2.3103 (DEC 2018)			**0.01**	**2**	**0.005**	**0.05**	**1**	**1**	**0.015**	**0.2**	**0.05**	**0.05**	**0.03**	**10**
40 CFR 141.62 MCL			0.01	2	0.005	0.1	1.3	NE	0.015	NE	0.05	NE	0.03	NE
NMED Tap Water (Rev 2. JUN 2019)			0.000855	3.28	0.00624	0.0057	0.7898	13.8	NE	2.02	0.0987	0.0812	0.0592	5.96
EPA RSL for Tap Water (NOV 2019)			0.000052	3.8	0.0092	22	0.8	14	0.015	0.43	0.1	0.094	0.004	6
POND ID	**DATE SAMPLED**	**METHOD**												
EP-12A	11/21/19	200.7/200.8	**0.011**	0.12	<0.002	0.01	0.003	**4.9**	<0.0025	**0.57**	0.0045	0.0023	0.0015	0.049
	4/29/2019[2]	--	Not sampled - dry											
	09/07/18	200.7/200.8	**0.049**	0.084	<0.002	0.0087	0.0062	0.75	<0.01	**1.6**	0.021	0.017	0.015	0.0064
	02/23/18	200.7/200.8	*<0.2**	0.094	*<0.01**	<0.006	<0.03	0.32	<0.005	0.1	*<0.2**	<0.025	0.0011	0.0045
	10/24/17	200.7/200.8	**0.036**	0.19	<0.002	0.013	<0.006	0.22	<0.005	**0.19**	*<0.5**	<0.005	0.0023	0.013
	03/30/17	200.7/200.8	**0.023**	0.12	<0.002	0.01	<0.006	0.3	<0.0025	**0.36**	0.042	<0.005	0.0012	0.0076
	08/30/16	200.7/200.8	**0.018**	0.12	<0.002	0.01	<0.006	1	<0.005	**0.41**	0.03	<0.005	0.002	0.042
	03/02/16	200.7/200.8	**0.019**	0.14	<0.002	0.0098	<0.006	0.79	0.0011	**0.39**	0.01	<0.005	0.0035	0.018
	09/01/15	200.7/200.8	**0.026**	0.09	<0.002	0.017	<0.006	0.17	<0.0025	0.14	0.031	<0.005	0.0025	<0.01
	03/25/15	200.7/200.8	*<0.2**	0.076	<0.002	0.01	<0.006	0.48	*<0.2**	0.088	*<0.2**	<0.005	<0.01	0.01
	11/12/14	200.7/200.8	**0.021**	0.11	*<0.02**	*<0.06**	<0.06	**2.2**	*<0.02**	**0.43**	<0.02	*<0.05**	<0.02	<0.1
	03/05/14	200.7/200.8	**0.016**	0.055	<0.002	0.011	<0.006	**1.4**	<0.01	**1**	0.017	<0.005	<0.01	0.015
	10/15/13	200.7/200.8	*<0.05**	0.066	<0.002	0.0098	<0.006	0.53	<0.005	**0.37**	*<0.05**	<0.025	*<0.05**	0.013
	05/28/13	200.7/200.8	**0.015**	0.057	*<0.01**	<0.03	<0.03	0.49	<0.01	**0.25**	0.018	<0.025	<0.01	0.069
	11/06/12	200.7/200.8	**0.012**	0.057	<0.002	<0.006	<0.006	0.7	<0.005	**0.38**	0.01	<0.005	0.0012	0.05
	05/29/12	200.7/200.8	**0.026**	0.075	<0.002	0.011	<0.006	0.16	<0.005	**0.73**	0.018	<0.005	<0.01	0.08
	11/01/11	200.7/200.8	0.0072	0.058	<0.002	<0.006	<0.006	1	<0.005	0.13	0.0059	<0.005	<0.005	0.022
	05/23/11	200.7/200.8	**0.025**	0.063	<0.002	0.021	<0.006	0.098	<0.005	**0.31**	*<0.05**	<0.005	<0.005	0.017
	11/16/10	6010B	*<0.1**	<0.1	*<0.01**	<0.03	<0.03	0.4	*<0.025**	**0.27**	*<0.25**	<0.025	0.002	<0.25
	04/20/10	6010B	*<0.2**	0.074	<0.002	<0.006	<0.006	0.55	<0.005	**0.28**	*<0.05**	<0.005	0.00166	<0.05

8.15.3 EVAPORATION PONDS (EP-1 thru EP-12B)

Dissolved Metals Analytical Result Summary

			PARAMETERS											
STANDARDS			Arsenic (mg/L)	Barium (mg/L)	Cadmium (mg/L)	Chromium (mg/L)	Copper (mg/L)	Iron (mg/L)	Lead (mg/L)	Manganese (mg/L)	Selenium (mg/L)	Silver (mg/L)	Uranium (mg/L)	Zinc (mg/L)
WQCC 20 NMAC 6.2.3103 (DEC 2018)			**0.01**	**2**	**0.005**	**0.05**	**1**	**1**	**0.015**	**0.2**	**0.05**	**0.05**	**0.03**	**10**
40 CFR 141.62 MCL			0.01	2	0.005	0.1	1.3	NE	0.015	NE	0.05	NE	0.03	NE
NMED Tap Water (Rev 2. JUN 2019)			0.000855	3.28	0.00624	0.0057	0.7898	13.8	NE	2.02	0.0987	0.0812	0.0592	5.96
EPA RSL for Tap Water (NOV 2019)			0.000052	3.8	0.0092	22	0.8	14	0.015	0.43	0.1	0.094	0.004	6
POND ID	**DATE SAMPLED**	**METHOD**												
EP-12B	11/21/19	200.7/200.8	0.0066	0.14	<0.002	0.012	0.0029	**7**	<0.0025	**0.39**	0.0054	0.0014	0.0019	0.049
	04/29/19	200.7/200.8	**0.019**	0.093	<0.002	<0.006	0.0046	0.13	<0.0025	0.066	0.0052	0.005	0.0019	0.036
	09/07/18	200.7/200.8	**0.016**	0.16	<0.002	0.002	<0.006	0.12	<0.0025	**0.26**	0.0041	0.0073	0.0012	0.0072
	02/22/18	200.7/200.8	**0.012**	0.13	*<0.01**	<0.03	<0.03	0.52	<0.0025	**0.23**	<0.02	<0.025	0.00079	0.007
	10/24/17	200.7/200.8	**0.011**	0.16	<0.002	0.0044	<0.006	0.63	<0.0025	**0.3**	0.014	<0.005	<0.0025	0.0098
	03/30/17	200.7/200.8	**0.017**	0.19	<0.002	0.0086	<0.006	0.49	<0.0025	**0.38**	0.03	<0.005	0.0021	0.017
	08/30/16	200.7/200.8	**0.016**	0.13	<0.002	0.013	<0.006	**2.6**	<0.01	**0.43**	0.031	<0.005	0.0013	0.045
	03/02/16	200.7/200.8	**0.013**	0.16	<0.002	0.0087	<0.006	**1.1**	0.0012	**0.3**	0.02	<0.005	0.0041	0.016
	09/01/15	200.7/200.8	0.01	0.12	<0.002	0.0092	<0.006	0.35	<0.01	**0.27**	0.014	<0.005	<0.01	0.015
	03/25/15	200.7/200.8	*<0.2**	0.11	*<0.005**	0.011	<0.006	**1.1**	*<0.2**	**0.22**	*<0.2**	<0.005	<0.01	0.016
	11/12/14	200.7/200.8	*<0.02**	0.076	<0.002	0.01	<0.006	**1.3**	*<0.02**	**0.24**	<0.02	<0.005	<0.02	0.023
	03/05/14	200.7/200.8	**0.012**	0.073	<0.002	0.013	<0.006	0.61	<0.01	**0.57**	0.017	<0.005	<0.01	<0.01
	10/15/13	200.7/200.8	*<0.05**	0.074	<0.002	0.0083	<0.006	0.26	<0.005	0.2	*<0.05**	<0.005	*<0.05**	0.016
	05/28/13	200.7/200.8	*<0.01**	0.052	*<0.01**	<0.03	<0.03	0.78	<0.01	**0.27**	0.014	<0.025	<0.01	<0.05
	11/06/12	200.7/200.8	**0.013**	0.042	<0.002	0.0068	<0.006	**1.1**	<0.005	**0.52**	0.012	<0.005	0.0082	0.072
	05/29/12	200.7/200.8	**0.019**	0.067	<0.002	0.0071	<0.006	0.18	<0.005	0.11	0.024	<0.005	<0.01	0.015
	11/01/11	200.7/200.8	0.0065	0.055	<0.002	<0.006	<0.006	0.98	<0.005	0.12	0.0058	<0.005	<0.005	0.024
	05/23/11	200.7/200.8	**0.015**	0.05	<0.002	0.022	<0.006	0.27	<0.005	**0.27**	*<0.05**	<0.005	<0.005	0.019
	11/16/10	6010B	*<0.1**	<0.1	*<0.01**	<0.03	<0.03	0.84	*<0.025**	0.15	*<0.25**	<0.025	<0.001	<0.25
	04/20/10	6010B	*<0.2**	0.064	<0.002	<0.006	<0.006	**1.8**	<0.005	**0.35**	*<0.05**	<0.005	0.00297	<0.05

DEFINITIONS

NE = Not established

NA = Not analyzed

Bold and highlighted values represent values above the applicable standards

STANDARDS

WQCC 20 NMAC 6.2.3103 - Standards for Ground Water of 10,000 mg/l TDS Concentration or Less.

a) Human Health Standards; b) Other Standards for Domestic Water

40 CFR 141.62 Maximum Contaminant Levels for Inorganic Contaminants

NMED Risk Assessment Guidance for Investigations and Remediations Table A-1

EPA Regional Screening Level (RSL) Summary Table

NOTES

Ponds marked in red were not sampled because the pond was dry

Items notes with a * and italics have a detection limit greater than or equal to the applicable standard.

1) Pond 6 is combined with ponds 4 and 5 as one pond.

8.15.4 EVAPORATION PONDS (EP-1 thru EP-12B)

Volatile Organic Compounds Analytical Result Summary

STANDARDS			PARAMETERS																	
			1,2,4-Trimethyl benzene (mg/L)	1,3,5-Trimethyl benzene (mg/L)	Naphthalene (mg/L)	1-Methyl naphthalene (mg/L)	2-Methyl naphthalene (mg/L)	Acetone (mg/L)	Bromo methane (mg/L)	2-Butanone (mg/L)	Carbon disulfide (mg/L)	Chloroform (mg/L)	Chloro methane (mg/L)	Isopropyl benzene (mg/L)	4-Isopropyl toluene (mg/L)	n-Butyl benzene (mg/L)	n-Propyl benzene (mg/L)	sec-Butyl benzene (mg/L)	4-Methylene 2-pentanone (mg/L)	Methylene Chloride (mg/L)
WQCC 20 NMAC 6.2.3103 (DEC 2018)			NE	NE	**0.03**	NE	NE	NE	NE	NE	NE	**0.1**	NE	NE	NE	NE	NE	NE	NE	**0.005**
40 CFR 141.61 MCL			NE	NE	NE	NE	NE	NE	NE	NE	NE	NE	NE	NE	NE	NE	NE	NE	NE	0.005
NMED Tap Water (Rev 2. JUN 2019)			NE	NE	0.00165	**0.0114**	**0.035**	**14.06**	**0.00754**	**5.56**	**0.81**	0.00229	**0.0203**	**0.447**	NE	NE	NE	NE	**1.24**	0.1180
EPA RSL for Tap Water (NOV 2019)			**0.056**	**0.06**	0.00017	0.0011	0.036	14	0.0075	5.6	0.81	0.00022	0.19	0.45	NE	**1**	**0.66**	**2**	6.3	0.011
POND ID	**DATE SAMPLED**	**METHOD**																		
EP-1			*Not sampled - no longer in service*																	
	11/12/14	8260B	<0.01	<0.01	<0.02	*<0.04**	*<0.04**	<0.1		<0.1	<0.1	<0.01	*<0.03**			<0.03				
	03/05/14	8260B	<0.01	<0.01	<0.02	*<0.04**	*<0.04**	<0.1		<0.1	<0.1	<0.01	*<0.03**			<0.03				
	10/15/13	8260B	<0.01	<0.01	<0.02	*<0.04**	*<0.04**	<0.1		<0.1	<0.1	<0.01	*<0.03**			<0.03				
	05/28/13	8260B	<0.01	<0.01	<0.02	*<0.04**	*<0.04**	<0.1		<0.1	<0.1	<0.01	*<0.03**			<0.03				
	11/06/12	8260B	<0.01	<0.01	<0.02	*<0.04**	*<0.04**	0.41		<0.1	0.32	<0.01	*<0.03**			<0.03				
	05/29/12	8260B	<0.01	<0.01	<0.02	*<0.04**	*<0.04**	0.61		0.11	<0.1	<0.01	*<0.03**			<0.01				
	11/01/11	8260B	<0.01	<0.01	<0.02	*<0.04**	*<0.04**	1.4		0.18	<0.1	<0.01	*<0.03**			<0.01				
	05/23/11	8260B	<0.01	<0.01	<0.02	*<0.04**	*<0.04**	1.8		0.2	<0.1	<0.01	*<0.03**			<0.01				
	08/02/10	8260B	0.016	<0.005	0.016	**0.044**	**0.07**	0.73		0.086	<0.05	<0.005	<0.005			<0.005				
	04/20/10	8260B	0.0055	0.0018	0.011	**0.027**	**0.045**	1.7		0.1	<0.01	<0.01	<0.01			<0.01				
EP-2	11/21/19	8260B	<0.01	<0.01	<0.02	*<0.04**	*<0.04**	<0.1	**0.011**	0.046	<0.1	<0.01	*<0.03**	<0.01	<0.01	<0.03	<0.01	<0.01		*<0.03**
	04/29/19	8260B	<0.01	<0.01	<0.02	*<0.04**	*<0.04**	<0.1	*<0.03**	<0.1	0.0049	<0.01	*<0.03**	<0.01	<0.01	<0.03	<0.01	<0.01		*<0.03**
	09/06/18	8260B	0.0005	<0.001	<0.002	<0.004	0.0006	0.11	<0.003	0.0054	0.0023	<0.001	<0.003	<0.001	<0.001	<0.003	<0.001	<0.001		0.00057
	02/21/18	8260B	0.0120	0.0039	0.0057	0.0076	0.0091	0.46	*<0.015**	<0.05	0.025	<0.005	<0.015	0.011	0.00086	0.0016	0.0023	0.00087		*<0.015**
	10/24/17	8260B	<0.005	<0.005	<0.01	*<0.02**	<0.02	0.082	*<0.015**	<0.05	0.013	<0.005	<0.015			<0.015	<0.005			*<0.015**
	03/30/17	8260B	0.0085	0.0031	<0.01	0.0061	0.0079	0.14	**0.014**	<0.05	0.027	<0.005	<0.015			0.0035	0.0033			*<0.015**
	08/29/16	8260B	0.00019	<0.001	<0.002	<0.004	0.00024	0.14		0.0081	0.017	<0.001	<0.003			<0.003	<0.001			
	03/02/16	8260B	0.0071	0.0018	0.001	0.0016	0.0016	0.13		0.0061	0.064	<0.005	<0.015			<0.015	0.0008			
	09/01/15	8260B	<0.01	<0.01	<0.02	*<0.04**	*<0.04**	<0.01		<0.1	<0.1	<0.01	*<0.03**			<0.03				
	03/24/15	8260B	<0.01	<0.01	<0.02	*<0.04**	*<0.04**	0.52		<0.1	<0.1	*<0.1**	*<0.03**			<0.03				
	11/12/14	8260B	<0.01	<0.01	<0.02	*<0.04**	*<0.04**	<0.01		<0.1	<0.1	<0.01	*<0.03**			<0.03				
	03/05/14	8260B	<0.01	<0.01	<0.02	*<0.04**	*<0.04**	0.67		<0.1	0.11	<0.01	*<0.03**			<0.03				
	10/15/13	8260B	<0.01	<0.01	<0.02	*<0.04**	*<0.04**	0.6		<0.1	<0.1	<0.01	*<0.03**			<0.03				
	05/28/13	8260B	<0.01	<0.01	<0.02	*<0.04**	*<0.04**	4.6		0.47	<0.1	<0.01	*<0.03**			<0.03				
	11/06/12	8260B	<0.01	<0.01	<0.02	*<0.04**	*<0.04**	2.4		0.38	<0.1	<0.01	*<0.03**			<0.03				
	05/29/12	8260B	<0.01	<0.01	<0.02	*<0.04**	*<0.04**	0.43		<0.1	<0.1	<0.01	*<0.03**			<0.01				
	11/01/11	8260B	<0.01	<0.01	<0.02	*<0.04**	*<0.04**	0.51		<0.1	<0.1	<0.01	*<0.03**			<0.01				
	05/23/11	8260B	<0.01	<0.01	<0.02	*<0.04**	*<0.04**	<0.1		<0.1	0.12	<0.01	*<0.03**			<0.01				
	08/02/10	8260B	<0.005	<0.0058	<0.01	*<0.02**	<0.02	0.27		<0.05	<0.05	<0.005	<0.005			<0.005				
	04/20/10	8260B	0.0046	0.0014	0.01	**0.032**	**0.052**	0.15		<0.01	0.021	<0.01	<0.01			<0.01				

8.15.4 EVAPORATION PONDS (EP-1 thru EP-12B)

Volatile Organic Compounds Analytical Result Summary

STANDARDS			PARAMETERS																	
			1,2,4-Trimethyl benzene (mg/L)	1,3,5-Trimethyl benzene (mg/L)	Naphthalene (mg/L)	1-Methyl naphthalene (mg/L)	2-Methyl naphthalene (mg/L)	Acetone (mg/L)	Bromo methane (mg/L)	2-Butanone (mg/L)	Carbon disulfide (mg/L)	Chloroform (mg/L)	Chloro methane (mg/L)	Isopropyl benzene (mg/L)	4-Isopropyl toluene (mg/L)	n-Butyl benzene (mg/L)	n-Propyl benzene (mg/L)	sec-Butyl benzene (mg/L)	4-Methylene 2-pentanone (mg/L)	Methylene Chloride (mg/L)
WQCC 20 NMAC 6.2.3103 (DEC 2018)			NE	NE	**0.03**	NE	NE	NE	NE	NE	NE	**0.1**	NE	NE	NE	NE	NE	NE	NE	**0.005**
40 CFR 141.61 MCL			NE	NE	NE	NE	NE	NE	NE	NE	NE	NE	NE	NE	NE	NE	NE	NE	NE	0.005
NMED Tap Water (Rev 2. JUN 2019)			NE	NE	0.00165	**0.0114**	**0.035**	**14.06**	**0.00754**	**5.56**	**0.81**	0.00229	**0.0203**	**0.447**	NE	NE	NE	NE	**1.24**	0.1180
EPA RSL for Tap Water (NOV 2019)			**0.056**	**0.06**	0.00017	0.0011	0.036	14	0.0075	5.6	0.81	0.00022	0.19	0.45	NE	**1**	**0.66**	**2**	6.3	0.011
POND ID	**DATE SAMPLED**	**METHOD**																		
EP-3	11/20/19	8260B	<0.01	<0.01	<0.02	*<0.04**	*<0.04**	0.18	*<0.03**	<0.1	0.029	<0.01	*<0.03**			<0.03	<0.01			*<0.03**
	04/30/19	8260B	<0.01	<0.01	<0.02	*<0.04**	*<0.04**	<0.1	*<0.03**	<0.1	0.0064	<0.01	*<0.03**			<0.03	<0.01			*<0.03**
	09/06/18	8260B	<0.001	<0.001	<0.002	<0.004	<0.004	0.065	<0.003	0.0046	0.0035	<0.001	<0.003			<0.003	<0.001			0.00064
	02/21/18	8260B	0.0020	0.0006	0.0022	0.0041	0.0042	0.31	*<0.015**	0.055	0.023	<0.005	<0.015			0.00069	0.00051			*<0.015**
	10/24/17	8260B	<0.005	<0.005	<0.01	*<0.02**	<0.02	0.091	*<0.015**	<0.05	0.014	<0.005	<0.015			<0.015	<0.005			*<0.015**
	03/30/17	8260B	0.0041	0.0016	<0.01	*<0.02**	<0.02	0.12	*<0.015**	0.027	0.023	<0.005	<0.015			<0.015	<0.005			*<0.015**
	08/29/16	8260B	0.00028	<0.001	<0.002	<0.004	0.00024	0.05	<0.003	0.004	0.021	<0.001	<0.003			<0.003				
	03/02/16	8260B	<0.005	<0.005	<0.01	*<0.02**	<0.02	0.032	**0.016**	0.0037	0.12	<0.005	0.0014			<0.015				
	09/01/15	8260B	<0.01	<0.01	<0.02	*<0.04**	*<0.04**	0.3		<0.1	<0.01	<0.01	*<0.03**			<0.03				
	03/24/15	8260B	<0.01	<0.01	<0.02	*<0.04**	<0.01	0.28		<0.1	<0.1	<0.01	*<0.03**			<0.03				
	11/12/14	8260B	<0.01	<0.01	<0.02	*<0.04**	*<0.04**	0.3		<0.1	<0.01	<0.01	*<0.03**			<0.03				
	03/05/14	8260B	<0.01	<0.01	<0.02	*<0.04**	*<0.04**	0.3		<0.1	0.14	<0.01	*<0.03**			<0.03				
	10/15/13	8260B	<0.01	<0.01	<0.02	*<0.04**	*<0.04**	0.16		<0.1	<0.01	<0.01	*<0.03**			<0.03				
	05/28/13	8260B	<0.01	<0.01	<0.02	*<0.04**	*<0.04**	0.2		<0.1	<0.1	<0.01	*<0.03**			<0.03				
	11/06/12	8260B	<0.01	<0.01	<0.02	*<0.04**	*<0.04**	0.24		<0.1	0.38	<0.01	*<0.03**			<0.03				
	05/29/12	8260B	<0.01	<0.01	<0.02	*<0.04**	*<0.04**	0.21		<0.1	<0.1	<0.01	*<0.03**			<0.01				
	11/01/11	8260B	<0.01	<0.01	<0.02	*<0.04**	*<0.04**	0.11		<0.1	<0.1	<0.01	*<0.03**			<0.01				
	05/23/11	8206B	<0.01	<0.01	<0.02	*<0.04**	*<0.04**	<0.1		<0.1	0.13	<0.01	*<0.03**			<0.01				
	08/02/10	8260B	<0.005	<0.005	*<0.1**	*<0.02**	<0.02	0.22		<0.05	<0.05	<0.005	<0.005			<0.005				
	04/20/10	8260B	<0.001	<0.001	0.0023	0.0076	0.012	0.21		0.014	0.043	<0.001	<0.001			<0.001				
EP-4	11/20/19 [1]		EP-4, EP-5, and EP-6 combined into one sample (see EP-6)																	
	04/30/19	8260B	<0.01	<0.01	<0.02	*<0.04**	*<0.04**	<0.1		<0.1	0.0058	<0.01	*<0.03**			<0.03				*<0.03**
	09/06/18	8260B	<0.001	<0.001	<0.001	<0.001	<0.001	0.027		0.0033	0.0052	<0.001	<0.001			<0.001				0.00054
	02/21/18	8260B	0.00084	<0.005	<0.01	0.003	0.003	0.22		0.029	0.028	<0.005	<0.015			<0.015				*<0.015**
	10/24/17	8260B	<0.005	<0.005	<0.01	*<0.02**	<0.02	0.094		<0.05	0.013	<0.005	<0.015			<0.015				
	03/30/17	8260B	0.0057	0.0023	<0.01	*<0.02**	<0.02	0.13		0.026	0.023	<0.005	<0.015			<0.015				
	08/29/16	8260B	<0.001	<0.001	<0.002	<0.004	<0.004	0.022		0.0017	0.014	<0.001	<0.003			<0.003				
	03/02/16	8260B	<0.005	<0.005	<0.01	*<0.02**	<0.02	0.02		0.0027	0.023	<0.005	<0.015			<0.015				
	09/01/15	8260B	<0.01	<0.01	<0.02	*<0.04**	*<0.04**	<0.1		<0.1	<0.1	<0.01	*<0.03**			<0.03				
	03/24/15	8260B	<0.01	<0.01	<0.02	*<0.04**	*<0.04**	<0.1		<0.1	<0.1	<0.01	*<0.03**			<0.03				
	11/12/14	8260B	<0.01	<0.01	<0.02	*<0.04**	*<0.04**	<0.1		<0.1	<0.1	<0.01	*<0.03**			<0.03				
	03/05/14	8260B	<0.01	<0.01	<0.02	*<0.04**	*<0.04**	0.31		<0.1	0.15	<0.01	*<0.03**			<0.01				
	10/15/13	8260B	<0.01	<0.01	<0.02	*<0.04**	*<0.04**	0.12		<0.1	<0.1	<0.01	*<0.03**			<0.03				
	05/28/13	8260B	<0.01	<0.01	<0.02	*<0.04**	*<0.04**	0.12		<0.1	<0.1	<0.01	*<0.03**			<0.03				
	11/06/12	8260B	<0.01	<0.01	<0.02	*<0.04**	*<0.04**	0.13		<0.1	0.78	<0.01	*<0.03**			<0.03				
	05/29/12	8260B	<0.01	<0.01	<0.02	*<0.04**	*<0.04**	<0.1		<0.1	<0.1	<0.01	*<0.03**			<0.01				
	11/01/11	8260B	<0.01	<0.01	<0.02	*<0.04**	*<0.04**	0.11		<0.1	<0.1	<0.01	*<0.03**			<0.01				
	05/23/11	8260B	<0.01	<0.01	<0.02	*<0.04**	*<0.04**	0.12		<0.1	0.14	<0.01	*<0.03**			<0.01				
	08/02/10	8260B	<0.001	<0.001	<0.002	<0.004	<0.004	0.1		0.011	<0.01	<0.001	<0.001			<0.001				
	04/20/10	8260B	<0.001	<0.001	<0.002	0.005	0.0073	0.19		0.014	0.041	<0.001	<0.001			<0.001				

8.15.4 EVAPORATION PONDS (EP-1 thru EP-12B)

Volatile Organic Compounds Analytical Result Summary

STANDARDS			PARAMETERS																	
			1,2,4-Trimethyl benzene (mg/L)	1,3,5-Trimethyl benzene (mg/L)	Naphthalene (mg/L)	1-Methyl naphthalene (mg/L)	2-Methyl naphthalene (mg/L)	Acetone (mg/L)	Bromo methane (mg/L)	2-Butanone (mg/L)	Carbon disulfide (mg/L)	Chloroform (mg/L)	Chloro methane (mg/L)	Isopropyl benzene (mg/L)	4-Isopropyl toluene (mg/L)	n-Butyl benzene (mg/L)	n-Propyl benzene (mg/L)	sec-Butyl benzene (mg/L)	4-Methylene 2-pentanone (mg/L)	Methylene Chloride (mg/L)
WQCC 20 NMAC 6.2.3103 (DEC 2018)			NE	NE	**0.03**	NE	NE	NE	NE	NE	NE	**0.1**	NE	NE	NE	NE	NE	NE	NE	**0.005**
40 CFR 141.61 MCL			NE	NE	NE	NE	NE	NE	NE	NE	NE	NE	NE	NE	NE	NE	NE	NE	NE	0.005
NMED Tap Water (Rev 2. JUN 2019)			NE	NE	0.00165	**0.0114**	**0.035**	**14.06**	**0.00754**	**5.56**	**0.81**	0.00229	**0.0203**	**0.447**	NE	NE	NE	NE	**1.24**	0.1180
EPA RSL for Tap Water (NOV 2019)			**0.056**	**0.06**	0.00017	0.0011	0.036	14	0.0075	5.6	0.81	0.00022	0.19	0.45	NE	**1**	**0.66**	**2**	6.3	0.011
POND ID	**DATE SAMPLED**	**METHOD**																		
EP-5	11/20/19 [1]		EP-4, EP-5, and EP-6 combined into one sample (see EP-6)																	
	04/30/19	8260B	<0.01	<0.01	<0.02	*<0.04**	*<0.04**	<0.1		<0.1	<0.1	<0.01	*<0.03**			<0.03				*<0.03**
	09/06/18	8260B	<0.001	<0.001	<0.001	<0.001	<0.001	0.0052		<0.001	0.0017	<0.001	<0.001			<0.001				0.0005
	02/21/18	8260B	<0.005	<0.005	<0.01	*<0.02**	<0.02	0.14		0.018	0.021	<0.005	<0.015			<0.015				*<0.015**
	10/24/17	8260B	<0.005	<0.005	<0.01	*<0.02**	<0.02	<0.05		<0.05	<0.05	<0.005	<0.015			<0.015				
	03/30/17	8260B	<0.005	<0.005	<0.01	*<0.02**	<0.02	0.017		0.017	<0.05	<0.005	<0.015			<0.015				
	08/29/16	8260B	<0.001	<0.001	<0.002	<0.004	<0.004	0.013		<0.01	<0.01	<0.001	0.00025			<0.003				
	03/02/16	8260B	<0.005	<0.005	<0.01	*<0.02**	<0.02	0.014		0.0017	0.01	<0.005	<0.015			<0.015				
	09/01/15	8260B	<0.01	<0.01	<0.02	*<0.04**	*<0.04**	<0.1		<0.1	<0.1	<0.01	*<0.03**			<0.03				
	03/24/15	8260B	<0.01	<0.01	<0.02	*<0.04**	*<0.04**	<0.1		<0.1	<0.1	<0.01	*<0.03**			<0.03				
	11/12/14	8260B	<0.01	<0.01	<0.02	*<0.04**	*<0.04**	<0.1		<0.1	<0.1	<0.01	*<0.03**			<0.03				
	03/05/14	8260B	<0.01	<0.01	<0.02	*<0.04**	*<0.04**	0.28		<0.1	0.12	<0.01	*<0.03**			<0.03				
	10/15/13	8260B	<0.01	<0.01	<0.02	*<0.04**	*<0.04**	<0.1		<0.1	<0.1	<0.01	*<0.03**			<0.03				
	05/28/13	8260B	<0.01	<0.01	<0.02	*<0.04**	*<0.04**	0.11		<0.1	<0.1	<0.01	*<0.03**			<0.03				
	11/06/12	8260B	<0.01	<0.01	<0.02	*<0.04**	*<0.04**	<0.1		<0.1	**1.3**	<0.01	*<0.03**			<0.03				
	05/29/12	8260B	<0.01	<0.01	<0.02	*<0.04**	*<0.04**	<0.1		<0.1	<0.1	<0.01	*<0.03**			<0.01				
	11/01/11	8260B	<0.01	<0.01	<0.02	*<0.04**	*<0.04**	<0.1		<0.1	<0.1	<0.01	*<0.03**			<0.01				
	05/23/11	8260B	<0.01	<0.01	<0.02	*<0.04**	*<0.04**	<0.1		<0.1	0.15	<0.01	*<0.03**			<0.01				
	08/02/10	8260B	<0.001	<0.001	<0.002	<0.004	<0.004	0.045		<0.1	<0.1	<0.01	<0.01			<0.01				
	04/20/10	8260B	<0.001	<0.001	<0.002	<0.004	0.0046	0.13		0.011	0.047	<0.001	<0.001			<0.001				
EP-6	11/20/19 [1]	8260B	<0.001	<0.001	<0.002	<0.004	<0.004	<0.01		<0.01	0.0015	<0.001	<0.003			<0.003				<0.003
	04/29/19	8260B	<0.01	<0.01	<0.02	*<0.04**	*<0.04**	<0.1		<0.1	0.013	<0.01	*<0.03**			<0.03				*<0.03**
	09/07/18	8260B	<0.001	<0.001	<0.002	<0.004	<0.004	0.002		<0.01	<0.01	<0.001	<0.003			<0.003				0.00047
	02/21/18	8260B	<0.005	<0.005	<0.01	*<0.02**	<0.02	0.067		0.0064	0.011	<0.005	<0.015			<0.015				*<0.015**
	10/24/17	8260B	<0.005	<0.005	<0.01	*<0.02**	<0.02	<0.05		<0.05	<0.05	<0.005	<0.015			<0.015				*<0.015**
	03/30/17	8260B	<0.005	<0.005	<0.01	*<0.02**	<0.02	0.017		0.017	<0.05	<0.005	<0.015			<0.015				*<0.015**
	08/29/16	8260B	<0.001	<0.001	<0.002	<0.004	<0.004	0.009		<0.01	<0.01	<0.001	0.00038			<0.003				<0.003
	03/02/16	8260B	<0.005	<0.005	<0.01	*<0.02**	<0.02	0.015		<0.05	0.0035	<0.005	<0.015			<0.015				0.0011
	09/01/15	8260B	<0.01	<0.01	<0.02	*<0.04**	*<0.04**	<0.1		<0.1	<0.1	<0.01	*<0.03**			<0.03				
	03/25/15	8260B	<0.01	<0.01	<0.02	*<0.04**	*<0.04**	<0.1		<0.1	<0.1	<0.01	*<0.03**			<0.03				
	11/12/14	8260B	<0.01	<0.01	<0.02	*<0.04**	*<0.04**	<0.1		<0.1	<0.1	<0.01	*<0.03**			<0.03				
	03/05/14	8260B	<0.01	<0.01	<0.02	*<0.04**	*<0.04**	0.14		<0.1	<0.1	<0.01	*<0.03**			<0.03				
	10/15/13	8260B	<0.01	<0.01	<0.02	*<0.04**	*<0.04**	<0.1		<0.1	<0.1	<0.01	*<0.03**			<0.03				
	05/28/13	8260B	<0.01	<0.01	<0.02	*<0.04**	*<0.04**	<0.1		<0.1	0.11	<0.01	*<0.03**			<0.03				
	11/06/12	8260B	<0.01	<0.01	<0.02	*<0.04**	*<0.04**	<0.1		<0.1	<0.1	<0.01	*<0.03**			<0.03				
	05/29/12	8260B	<0.001	<0.001	<0.002	<0.004	<0.004	<0.01		<0.01	<0.01	<0.001	<0.003			<0.001				
	11/01/11	8260B	<0.01	<0.01	<0.02	*<0.04**	*<0.04**	<0.1		<0.1	<0.1	<0.01	*<0.03**			<0.01				
	05/23/11	8260B	<0.01	<0.01	<0.02	*<0.04**	*<0.04**	<0.1		<0.1	<0.1	<0.01	*<0.03**			<0.01				
	08/02/10	8260B	<0.001	<0.001	<0.002	<0.004	<0.004	0.02		<0.1	<0.1	<0.01	<0.01			<0.01				
	04/20/10	8260B	<0.001	<0.001	<0.002	<0.004	<0.004	0.044		<0.1	<0.1	<0.001	<0.001			<0.001				

8.15.4 EVAPORATION PONDS (EP-1 thru EP-12B)

Volatile Organic Compounds Analytical Result Summary

STANDARDS			PARAMETERS																	
			1,2,4-Trimethyl benzene (mg/L)	1,3,5-Trimethyl benzene (mg/L)	Naphthalene (mg/L)	1-Methyl naphthalene (mg/L)	2-Methyl naphthalene (mg/L)	Acetone (mg/L)	Bromo methane (mg/L)	2-Butanone (mg/L)	Carbon disulfide (mg/L)	Chloroform (mg/L)	Chloro methane (mg/L)	Isopropyl benzene (mg/L)	4-Isopropyl toluene (mg/L)	n-Butyl benzene (mg/L)	n-Propyl benzene (mg/L)	sec-Butyl benzene (mg/L)	4-Methylene 2-pentanone (mg/L)	Methylene Chloride (mg/L)
WQCC 20 NMAC 6.2.3103 (DEC 2018)			NE	NE	**0.03**	NE	NE	NE	NE	NE	NE	**0.1**	NE	NE	NE	NE	NE	NE	NE	**0.005**
40 CFR 141.61 MCL			NE	NE	NE	NE	NE	NE	NE	NE	NE	NE	NE	NE	NE	NE	NE	NE	NE	0.005
NMED Tap Water (Rev 2. JUN 2019)			NE	NE	0.00165	**0.0114**	**0.035**	**14.06**	**0.00754**	**5.56**	**0.81**	0.00229	**0.0203**	**0.447**	NE	NE	NE	NE	**1.24**	0.1180
EPA RSL for Tap Water (NOV 2019)			**0.056**	**0.06**	0.00017	0.0011	0.036	14	0.0075	5.6	0.81	0.00022	0.19	0.45	NE	**1**	**0.66**	**2**	6.3	0.011
POND ID	**DATE SAMPLED**	**METHOD**																		
EP-7	11/20/19	8260B	0.00055	<0.001	<0.002	<0.004	<0.004	0.058		<0.01	<0.01	<0.001	0.0009			<0.003			<0.01	
	04/29/19	8260B	<0.01	<0.01	<0.02	*<0.04**	*<0.04**	0.016		<0.1	<0.1	<0.01	0.0047			<0.03			<0.1	
	09/07/18	8260B	0.00047	<0.001	<0.002	<0.004	<0.004	0.027		0.0017	<0.01	<0.001	0.0021			<0.003			0.00058	
	02/23/18	8260B	0.00044	<0.001	<0.002	<0.004	<0.004	0.028		0.0022	0.00041	<0.001	0.0024			<0.003			<0.003	
	10/24/17	8260B	<0.005	<0.005	<0.01	*<0.02**	<0.02	<0.05		<0.05	<0.05	<0.005	<0.015			<0.015				
	03/30/17	8260B	0.0023	<0.005	<0.01	*<0.02**	<0.02	0.0095		0.016	<0.05	<0.005	<0.015			<0.015				
	08/30/16	8260B	<0.01	<0.01	<0.02	*<0.04**	*<0.04**	<0.1		<0.1	<0.1	<0.01	*<0.03**			<0.03				
	03/02/16	8260B	<0.005	<0.005	<0.01	*<0.02**	<0.02	0.018		<0.05	<0.05	<0.005	0.0063			<0.03				
	09/01/15	8260B	<0.01	<0.01	<0.02	*<0.04**	*<0.04**	<0.1		<0.1	<0.1	<0.01	*<0.03**			<0.03				
	03/25/15	8260B	<0.01	<0.01	<0.02	*<0.04**	*<0.04**	<0.1		<0.1	<0.1	<0.01	*<0.03**			<0.03				
	11/12/14	8260B	<0.01	<0.01	<0.02	*<0.04**	*<0.04**	<0.1		<0.1	<0.1	<0.01	*<0.03**			<0.03				
	03/05/14	8260B	<0.01	<0.01	<0.02	*<0.04**	*<0.04**	<0.1		<0.1	<0.1	<0.01	*<0.03**			<0.03				
	10/15/13	8260B	<0.01	<0.01	<0.02	*<0.04**	*<0.04**	<0.1		<0.1	<0.1	<0.01	*<0.03**			<0.03				
	05/28/13	8260B	<0.01	<0.01	<0.02	*<0.04**	*<0.04**	<0.1		<0.1	<0.1	<0.01	*<0.03**			<0.03				
	11/06/12	8260B	<0.01	<0.01	<0.02	*<0.04**	*<0.04**	<0.1		<0.1	<0.1	<0.01	*<0.03**			<0.03				
	05/29/12	8260B	<0.01	<0.01	<0.02	*<0.04**	*<0.04**	<0.1		<0.1	<0.1	<0.01	*<0.03**			<0.01				
	11/01/11	8260B	<0.01	<0.01	<0.02	*<0.04**	*<0.04**	<0.1		<0.1	<0.1	<0.01	*<0.03**			<0.01				
	05/23/11	8260B	<0.01	<0.01	<0.02	*<0.04**	*<0.04**	<0.1		<0.1	<0.1	<0.01	*<0.03**			<0.01				
	08/02/10	8260B	<0.001	<0.001	<0.002	<0.004	<0.004	0.061		<0.01	<0.01	<0.001	<0.001			<0.001				
	04/20/10	8260B	<0.001	<0.001	<0.002	<0.004	<0.004	0.023		<0.01	<0.01	<0.001	<0.001			<0.001				
EP-8	11/20/19	8260B	0.0005	<0.001	<0.002	<0.004	<0.004	0.045		<0.01	<0.01	<0.001	0.0013			<0.003				
	04/29/19	8260B	<0.01	<0.01	<0.02	*<0.04**	*<0.04**	<0.1		<0.1	<0.1	<0.01	0.0042			<0.03				
	09/07/18	8260B	<0.001	<0.001	<0.002	<0.004	<0.004	0.0083		<0.01	<0.01	<0.001	0.0012			<0.003				
	02/23/18	8260B	0.00032	<0.001	<0.002	<0.004	<0.004	0.036		0.0028	0.0019	<0.001	0.00087			<0.003				
	10/24/17	8260B	<0.005	<0.005	<0.01	*<0.02**	<0.02	<0.05		<0.05	<0.05	<0.005	<0.015			<0.015				
	03/30/17	8260B	<0.005	<0.005	<0.01	*<0.02**	<0.02	0.012		0.017	<0.05	<0.005	<0.015			<0.015				
	08/30/16	8260B	<0.01	<0.01	<0.02	*<0.04**	*<0.04**	<0.1		<0.1	<0.1	<0.01	*<0.03**			<0.03				
	09/01/15	8260B	<0.01	<0.01	<0.02	*<0.04**	*<0.04**	<0.1		<0.1	<0.1	<0.01	*<0.03**			<0.03				
	03/25/15	8260B	<0.01	<0.01	<0.02	<0.01	*<0.04**	<0.1		<0.1	<0.1	<0.01	*<0.03**			<0.03				
	11/12/14	8260B	<0.01	<0.01	<0.02	*<0.04**	*<0.04**	<0.1		<0.1	<0.1	<0.01	*<0.03**			<0.03				
	03/05/14	8260B	<0.01	<0.01	<0.02	*<0.04**	*<0.04**	<0.1		<0.1	<0.1	<0.01	*<0.03**			<0.03				
	10/15/13	8260B	<0.01	<0.01	<0.02	*<0.04**	*<0.04**	<0.1		<0.1	<0.1	<0.01	*<0.03**			<0.03				
	05/28/13	8260B	<0.01	<0.01	<0.02	*<0.04**	*<0.04**	<0.1		<0.1	<0.1	<0.01	*<0.03**			<0.03				
	11/06/12	8260B	<0.01	<0.01	<0.02	*<0.04**	*<0.04**	<0.1		<0.1	<0.1	*<0.1**	*<0.03**			<0.03				
	05/29/12	8260B	<0.01	<0.01	<0.02	*<0.04**	*<0.04**	<0.1		<0.1	<0.1	*<0.1**	*<0.03**			<0.01				
	11/01/11	8260B	<0.01	<0.01	<0.02	*<0.04**	*<0.04**	<0.1		<0.1	<0.1	*<0.1**	*<0.03**			<0.01				
	05/23/11	8260B	<0.01	<0.01	<0.02	*<0.04**	*<0.04**	<0.1		<0.1	<0.1	<0.01	*<0.03**			<0.01				
	08/02/10	8260B	<0.001	<0.001	<0.002	<0.004	<0.004	0.066		<0.01	<0.01	<0.001	<0.001			<0.001				
	04/20/10	8260B	<0.001	<0.001	<0.002	<0.004	<0.004	0.038		<0.01	<0.01	<0.001	<0.001			<0.001				

8.15.4 EVAPORATION PONDS (EP-1 thru EP-12B)

Volatile Organic Compounds Analytical Result Summary

STANDARDS			PARAMETERS																	
			1,2,4-Trimethyl benzene (mg/L)	1,3,5-Trimethyl benzene (mg/L)	Naphthalene (mg/L)	1-Methyl naphthalene (mg/L)	2-Methyl naphthalene (mg/L)	Acetone (mg/L)	Bromo methane (mg/L)	2-Butanone (mg/L)	Carbon disulfide (mg/L)	Chloroform (mg/L)	Chloro methane (mg/L)	Isopropyl benzene (mg/L)	4-Isopropyl toluene (mg/L)	n-Butyl benzene (mg/L)	n-Propyl benzene (mg/L)	sec-Butyl benzene (mg/L)	4-Methylene 2-pentanone (mg/L)	Methylene Chloride (mg/L)
WQCC 20 NMAC 6.2.3103 (DEC 2018)			NE	NE	**0.03**	NE	NE	NE	NE	NE	NE	**0.1**	NE	NE	NE	NE	NE	NE	NE	**0.005**
40 CFR 141.61 MCL			NE	NE	NE	NE	NE	NE	NE	NE	NE	NE	NE	NE	NE	NE	NE	NE	NE	0.005
NMED Tap Water (Rev 2. JUN 2019)			NE	NE	0.00165	**0.0114**	**0.035**	**14.06**	**0.00754**	**5.56**	**0.81**	0.00229	**0.0203**	**0.447**	NE	NE	NE	NE	**1.24**	0.1180
EPA RSL for Tap Water (NOV 2019)			**0.056**	**0.06**	0.00017	0.0011	0.036	14	0.0075	5.6	0.81	0.00022	0.19	0.45	NE	**1**	**0.66**	**2**	6.3	0.011
POND ID	**DATE SAMPLED**	**METHOD**																		
EP-9	11/20/19	8260B	<0.001	<0.001	<0.002	<0.004	<0.004	0.013		<0.01	<0.01	<0.001	0.0014			<0.001			<0.01	
	04/29/19	8260B	<0.01	<0.01	<0.02	*<0.04**	*<0.04**	<0.1		<0.1	<0.1	<0.01	0.0052			<0.03			<0.1	
	09/07/18	8260B	<0.001	<0.001	<0.002	<0.004	<0.004	0.016		0.0015	<0.01	<0.001	0.0025			<0.003			0.00047	
	02/23/18	8260B	0.00019	<0.001	<0.002	<0.004	<0.004	0.027		0.0016	0.00091	<0.001	0.00073			<0.003			<0.003	
	10/24/17	8260B	<0.005	<0.005	<0.01	*<0.02**	<0.02	<0.05		<0.05	<0.05	<0.005	<0.015			<0.015				
	03/30/17	8260B	<0.005	<0.005	<0.01	*<0.02**	<0.02	0.012		<0.05	<0.05	<0.005	<0.015			<0.015				
	08/30/16	8260B	<0.01	<0.01	<0.02	*<0.04**	*<0.04**	<0.1		<0.1	<0.1	<0.01	*<0.03**			<0.03				
	03/02/16	8260B	0.00055	<0.001	<0.002	<0.002	0.00029	0.016		0.0015	<0.01	<0.001	<0.003			<0.003				
	09/01/15	8260B	<0.01	<0.01	<0.02	*<0.04**	*<0.04**	<0.1		<0.1	<0.1	<0.01	*<0.03**			<0.03				
	03/25/15	8260B	<0.01	<0.01	<0.02	*<0.04**	*<0.04**	<0.1		<0.1	<0.1	<0.01	*<0.03**			<0.03				
	11/12/14	8260B	<0.01	<0.01	<0.02	*<0.04**	*<0.04**	<0.1		<0.1	<0.1	<0.01	*<0.03**			<0.03				
	03/05/14	8260B	<0.01	<0.01	<0.02	*<0.04**	*<0.04**	<0.1		<0.1	<0.1	<0.01	*<0.03**			<0.03				
	10/15/13	8260B	<0.01	<0.01	<0.02	*<0.04**	*<0.04**	<0.1		<0.1	<0.1	<0.01	*<0.03**			<0.03				
	05/28/13	8260B	<0.01	<0.01	<0.02	*<0.04**	*<0.04**	<0.1		<0.1	<0.1	<0.01	*<0.03**			<0.03				
	11/06/12	8260B	<0.01	<0.01	<0.02	*<0.04**	*<0.04**	<0.1		<0.1	<0.1	<0.01	*<0.03**			<0.03				
	05/29/12	8260B	<0.01	<0.01	<0.02	*<0.04**	*<0.04**	<0.1		<0.1	<0.1	<0.01	*<0.03**			<0.01				
	11/01/11	8260B	<0.01	<0.01	<0.02	*<0.04**	*<0.04**	<0.1		<0.1	<0.1	<0.01	*<0.03**			<0.01				
	05/23/11	8260B	<0.01	<0.01	<0.02	*<0.04**	*<0.04**	<0.1		<0.1	<0.1	<0.01	*<0.03**			<0.01				
	04/20/10	8260B	<0.001	<0.001	<0.002	<0.004	<0.004	0.015		<0.01	<0.01	<0.001	<0.001			<0.001				
EP-11	11/21/2019[2]	--	Not sampled - dry																	
	04/29/19	8260B	<0.01	<0.01	<0.02	*<0.04**	*<0.04**	<0.1		<0.1	<0.1	<0.01	0.0046			<0.03			<0.1	
	09/07/18	8260B	0.0012	<0.001	<0.002	0.00042	<0.004	0.066		0.048	0.0006	<0.001	**0.031**			<0.003			0.0028	
	02/23/18	8260B	0.00043	<0.001	<0.002	<0.004	<0.004	0.036		0.0031	0.0007	<0.001	0.0029			<0.003			0.00072	
	10/24/17	8260B	<0.005	<0.005	<0.01	*<0.02**	<0.02	<0.05		<0.05	<0.05	<0.005	<0.015			<0.015				
	03/30/17	8260B	0.0025	<0.005	<0.01	*<0.02**	<0.02	0.0092		<0.05	<0.05	<0.005	<0.015			<0.015				
	08/30/16	8260B	<0.01	<0.01	<0.02	*<0.04**	*<0.04**	<0.1		<0.1	<0.1	<0.01	*<0.03**			<0.03				
	03/02/16	8260B	<0.005	<0.005	<0.01	*<0.02**	<0.02	0.012		0.002	<0.05	<0.005	0.0065			<0.015				
	09/01/15	8260B	<0.01	<0.01	<0.02	*<0.04**	*<0.04**	<0.1		<0.1	<0.1	<0.01	*<0.03**			<0.03				
	03/25/15	8260B	<0.01	<0.01	<0.02	*<0.04**	*<0.04**	<0.1		<0.1	<0.1	<0.01	*<0.03**			<0.03				
	11/12/14	8260B	<0.01	<0.01	<0.02	*<0.04**	*<0.04**	<0.1		<0.1	<0.1	<0.01	*<0.03**			<0.03				
	03/05/14	8260B	<0.01	<0.01	<0.02	*<0.04**	*<0.04**	<0.1		<0.1	<0.1	<0.01	*<0.03**			<0.03				
	10/15/13	8260B	<0.01	<0.01	<0.02	*<0.04**	*<0.04**	<0.1		<0.1	<0.1	<0.01	*<0.03**			<0.03				
	05/28/13	8260B	<0.01	<0.01	<0.02	*<0.04**	*<0.04**	<0.1		<0.1	<0.1	<0.01	*<0.03**			<0.03				
	11/06/12	8260B	<0.01	<0.01	<0.02	*<0.04**	*<0.04**	0.12		<0.1	0.59	<0.01	*<0.03**			<0.03				
	05/29/12	8260B	<0.01	<0.01	<0.02	*<0.04**	*<0.04**	<0.1		<0.1	<0.1	<0.01	*<0.03**			<0.01				
	11/01/11	8260B	<0.01	<0.01	<0.02	*<0.04**	*<0.04**	<0.1		<0.03	<0.1	<0.01	*<0.03**			<0.01				
	05/23/11	8260B	<0.01	<0.01	<0.02	*<0.04**	*<0.04**	<0.1		<0.1	<0.1	<0.01	*<0.03**			<0.01				
	04/20/10	8260B	<0.001	<0.001	<0.002	<0.004	<0.004	0.039		<0.01	<0.01	<0.001	<0.001			<0.001				

8.15.4 EVAPORATION PONDS (EP-1 thru EP-12B)

Volatile Organic Compounds Analytical Result Summary

STANDARDS			PARAMETERS																	
			1,2,4-Trimethyl benzene (mg/L)	1,3,5-Trimethyl benzene (mg/L)	Naphthalene (mg/L)	1-Methyl naphthalene (mg/L)	2-Methyl naphthalene (mg/L)	Acetone (mg/L)	Bromo methane (mg/L)	2-Butanone (mg/L)	Carbon disulfide (mg/L)	Chloroform (mg/L)	Chloro methane (mg/L)	Isopropyl benzene (mg/L)	4-Isopropyl toluene (mg/L)	n-Butyl benzene (mg/L)	n-Propyl benzene (mg/L)	sec-Butyl benzene (mg/L)	4-Methylene 2-pentanone (mg/L)	Methylene Chloride (mg/L)
WQCC 20 NMAC 6.2.3103 (DEC 2018)			NE	NE	**0.03**	NE	NE	NE	NE	NE	NE	**0.1**	NE	NE	NE	NE	NE	NE	NE	**0.005**
40 CFR 141.61 MCL			NE	NE	NE	NE	NE	NE	NE	NE	NE	NE	NE	NE	NE	NE	NE	NE	NE	0.005
NMED Tap Water (Rev 2. JUN 2019)			NE	NE	0.00165	**0.0114**	**0.035**	**14.06**	**0.00754**	**5.56**	**0.81**	0.00229	**0.0203**	**0.447**	NE	NE	NE	NE	**1.24**	0.1180
EPA RSL for Tap Water (NOV 2019)			**0.056**	**0.06**	0.00017	0.0011	0.036	14	0.0075	5.6	0.81	0.00022	0.19	0.45	NE	**1**	**0.66**	**2**	6.3	0.011
POND ID	**DATE SAMPLED**	**METHOD**																		
EP-12A	11/21/19	8260B	<0.005	<0.005	<0.01	*<0.02**	<0.02	0.14	*<0.015**	0.015	0.032	<0.005	<0.015			<0.015			<0.05	
	4/29/2019[2]	--	Not sampled - dry																	
	09/07/18	8260B	<0.001	<0.001	<0.002	<0.004	<0.004	0.098	<0.003	0.0083	0.00077	<0.001	0.0014			<0.003			0.0016	
	02/23/18	8260B	<0.001	<0.001	<0.002	<0.004	<0.004	0.019	<0.003	0.0037	0.011	<0.001	<0.003			<0.001			<0.003	
	10/24/17	8260B	<0.005	<0.005	<0.01	*<0.02**	<0.02	<0.05	*<0.015**	<0.05	<0.05	<0.005	<0.015			<0.015				
	03/30/17	8260B	<0.005	<0.005	<0.01	*<0.02**	<0.02	0.011	*<0.015**	<0.05	<0.05	<0.005	<0.015			<0.015				
	08/30/16	8260B	<0.01	<0.01	<0.02	*<0.04**	*<0.04**	<0.1	*<0.03**	<0.1	<0.1	<0.01	*<0.03**			<0.03				
	03/02/16	8260B	<0.005	<0.005	<0.01	*<0.02**	<0.02	0.0065	**0.04**	0.0024	0.055	<0.005	<0.015			<0.015				
	09/01/15	8260B	<0.01	<0.01	<0.02	*<0.04**	*<0.04**	<0.1		<0.1	<0.1	<0.01	*<0.03**			<0.03				
	03/25/15	8260B	*<0.10**	<0.01	<0.02	*<0.04**	*<0.04**	<0.1		<0.1	<0.1	*<0.1**	*<0.03**			<0.03				
	11/12/14	8260B	<0.01	<0.01	<0.02	*<0.04**	*<0.04**	<0.1		<0.1	<0.1	<0.01	*<0.03**			<0.03				
	03/05/14	8260B	<0.01	<0.01	<0.02	*<0.04**	*<0.04**	<0.1		<0.1	<0.1	<0.01	*<0.03**			<0.03				
	10/15/13	8260B	<0.01	<0.01	<0.02	*<0.04**	*<0.04**	<0.1		<0.1	<0.1	<0.01	*<0.03**			<0.03				
	05/28/13	8260B	<0.01	<0.01	<0.02	*<0.04**	*<0.04**	0.17		<0.1	0.14	<0.01	*<0.03**			<0.03				
	11/06/12	8260B	<0.01	<0.01	<0.02	*<0.04**	*<0.04**	0.15		<0.1	0.61	<0.01	*<0.03**			<0.03				
	05/29/12	8260B	<0.01	<0.01	<0.02	*<0.04**	*<0.04**	<0.1		<0.1	<0.1	<0.01	*<0.03**			<0.01				
	11/01/11	8260B	<0.01	<0.01	<0.02	*<0.04**	*<0.04**	0.16		<0.1	<0.1	<0.01	*<0.03**			<0.01				
	05/23/11	8260B	<0.01	<0.01	<0.02	*<0.04**	*<0.04**	<0.1		<0.1	0.1	<0.01	*<0.03**			<0.01				
	04/20/11	8260B	<0.001	<0.001	<0.002	<0.004	<0.004	0.13		0.011	0.034	<0.001	<0.001			<0.001				
EP-12B	11/21/19	8260B	<0.005	<0.005	<0.01	*<0.02**	<0.02	<0.05	*<0.015**	0.017	0.031	<0.005	<0.015			<0.015	<0.005			
	04/29/19	8260B	<0.01	<0.01	<0.02	*<0.04**	*<0.04**	<0.1	*<0.03**	<0.1	<0.1	<0.01	*<0.03**			<0.03	<0.01			
	09/07/18	8260B	<0.001	<0.001	<0.002	<0.004	<0.004	0.051	<0.003	0.0043	0.023	<0.001	<0.003			<0.003	<0.001			
	02/22/18	8260B	0.00087	0.00028	0.00068	0.0011	0.0013	0.11	<0.003	0.034	0.029	<0.001	<0.003			0.0002	0.00018			
	10/24/17	8260B	<0.005	<0.005	<0.01	*<0.02**	<0.02	0.13	*<0.015**	<0.05	0.012	<0.005	<0.015			<0.015	<0.005			
	03/30/17	8260B	0.0055	<0.005	<0.01	*<0.02**	<0.02	0.087	**0.0091**	0.025	0.023	<0.005	<0.015			<0.015	<0.005			
	08/30/16	8260B	0.0017	<0.01	<0.02	*<0.04**	*<0.04**	0.17	*<0.03**	<0.1	0.016	<0.01	*<0.03**			<0.03				
	03/02/16	8260B	<0.005	<0.005	<0.01	*<0.02**	<0.02	0.031	**0.038**	0.0031	0.063	<0.01	0.0016			<0.015				
	09/01/15	8260B	<0.01	<0.01	<0.02	*<0.04**	*<0.04**	<0.1		<0.1	<0.1	<0.01	*<0.03**			<0.03				
	03/25/15	8260B	<0.01	*<0.1**	<0.02	*<0.04**	*<0.04**	0.13		<0.1	<0.1	<0.01	*<0.03**			<0.03				
	11/12/14	8260B	<0.01	<0.01	<0.02	*<0.04**	*<0.04**	<0.1		<0.1	<0.1	<0.01	*<0.03**			<0.03				
	03/05/14	8260B	<0.01	<0.01	<0.02	*<0.04**	*<0.04**	<0.1		<0.1	<0.1	<0.01	*<0.03**			<0.03				
	10/15/13	8260B	<0.01	<0.01	<0.02	*<0.04**	*<0.04**	0.28		<0.1	<0.1	<0.01	*<0.03**			<0.03				
	05/28/13	8260B	<0.01	<0.01	<0.02	*<0.04**	*<0.04**	0.53		<0.1	<0.1	<0.01	*<0.03**			<0.03				
	11/06/12	8260B	<0.01	<0.01	<0.02	*<0.04**	*<0.04**	0.24		<0.1	0.47	<0.01	*<0.03**			<0.03				
	05/29/12	8260B	<0.01	<0.01	<0.02	*<0.04**	*<0.04**	0.1		<0.1	<0.1	<0.01	*<0.03**			<0.01				
	11/01/11	8260B	<0.01	<0.01	<0.02	*<0.04**	*<0.04**	0.16		<0.1	<0.1	<0.01	*<0.03**			<0.01				
	05/23/11	8260B	<0.01	<0.01	<0.02	*<0.04**	*<0.04**	0.18		<0.1	0.17	<0.01	*<0.03**			<0.01				
	04/20/11	8260B	0.0016	<0.001	0.0034	**0.012**	0.019	0.3		0.025	0.035	<0.001	<0.001			<0.001				

8.15.4 EVAPORATION PONDS (EP-1 thru EP-12B)

Volatile Organic Compounds Analytical Result Summary

STANDARDS			PARAMETERS																
			1,2,4-Trimethyl benzene (mg/L)	1,3,5-Trimethyl benzene (mg/L)	Naphthalene (mg/L)	1-Methyl naphthalene (mg/L)	2-Methyl naphthalene (mg/L)	Acetone (mg/L)	Bromo methane (mg/L)	2-Butanone (mg/L)	Carbon disulfide (mg/L)	Chloroform (mg/L)	Chloro methane (mg/L)	Isopropyl benzene (mg/L)	4-Isopropyl toluene (mg/L)	n-Butyl benzene (mg/L)	n-Propyl benzene (mg/L)	sec-Butyl benzene (mg/L)	4-Methylene 2-pentanone (mg/L)	Methylene Chloride (mg/L)
WQCC 20 NMAC 6.2.3103 (DEC 2018)			NE	NE	**0.03**	NE	NE	NE	NE	NE	NE	**0.1**	NE	NE	NE	NE	NE	NE	NE	**0.005**
40 CFR 141.61 MCL			NE	NE	NE	NE	NE	NE	NE	NE	NE	NE	NE	NE	NE	NE	NE	NE	NE	0.005
NMED Tap Water (Rev 2. JUN 2019)			NE	NE	0.00165	**0.0114**	**0.035**	**14.06**	**0.00754**	**5.56**	**0.81**	0.00229	**0.0203**	**0.447**	NE	NE	NE	NE	**1.24**	0.1180
EPA RSL for Tap Water (NOV 2019)			**0.056**	**0.06**	0.00017	0.0011	0.036	14	0.0075	5.6	0.81	0.00022	0.19	0.45	NE	**1**	**0.66**	**2**	6.3	0.011
POND ID	DATE SAMPLED	METHOD																		

DEFINITIONS

NE = Not established

NA = Not analyzed

Bold and highlighted values represent values above the applicable standards

STANDARDS

WQCC 20 NMAC 6.2.3103 - Standards for Ground Water of 10,000 mg/l TDS Concentration or Less.

a) Human Health Standards; b) Other Standards for Domestic Water

40 CFR 141.61 Maximum Contaminant Levels for Organic Contaminants

NMED Risk Assessment Guidance for Investigations and Remediations Table A-1

EPA Regional Screening Level (RSL) Summary Table

NOTES

Ponds marked in red were not sampled because the pond was dry

Items notes with a * and italics have a detection limit greater than or equal to the applicable standard.

1) Pond 6 is combined with ponds 4 and 5 as one pond.

8.15.5 EVAPORATION PONDS (EP-1 thru EP-12B)

Semi-Volatile Organic Compounds Analytical Result Summary

			PARAMETERS																								
STANDARDS			Aniline (mg/L)	Benzoic acid (mg/L)	Benzyl alcohol (mg/L)	Bis (2-ethyl hexyl) phthalate (mg/L)	Carbazole (mg/L)	Chrysene (mg/L)	Di-n-octyl phthalate (mg/L)	Dimethyl phthalate (mg/L)	2,4-Dimethyl phenol (mg/L)	Fluor anthene (mg/L)	Fluorene (mg/L)	2-Methyl naphthalene (mg/L)	2-Methyl phenol (mg/L)	3+4-Methyl phenol (mg/L)	Naphtha lene (mg/L)	2-Nitro phenol (mg/L)	Phenan threne (mg/L)	Phenol (mg/L)	Pyrene (mg/L)	Pyridine (mg/L)	Benz (a) anthra cene (mg/L)	Benzo (a) pyrene (mg/L)	Benzo (b) fluor anthene (mg/L)	Benzo (g,h,i) perylene (mg/L)	Indeno (1,2,3-cd) pyrene (mg/L)
WQCC 20 NMAC 6.2.3103 (DEC 2018)			NE	NE	NE	NE	NE	NE	NE	NE	NE	NE	NE	NE	NE	NE	0.03	NE	NE	0.005	NE	NE	NE	0.0002	NE	NE	NE
40 CFR 141.61 MCL			NE	NE	NE	0.006	NE	NE	NE	NE	NE	NE	NE	NE	NE	NE	NE	NE	NE	NE	NE	NE	NE	0.0002	NE	NE	NE
NMED Tap Water (Rev 2. JUN 2019)			NE	NE	NE	0.0556	NE	0.0343	NE	0.612	0.354	0.802	0.288	0.035	NE	NE	0.00165	NE	0.17	5.76	0.117	NE	0.00012	0.00025	0.000343	NE	0.000343
EPA RSL for Tap Water (NOV 2019)			0.13	75	2	0.056	NE	0.025	0.2	NE	0.36	0.8	0.29	0.036	0.93	0.93	0.00017	NE	NE	5.8	0.12	0.02	0.00003	0.000025	0.0025	NE	0.00025
POND ID	SAMPLE DATE	METHOD																									
EP-1			*Not sampled - no longer in service*																								
	11/12/14	8270C	<0.05	<0.1	<0.05	*<0.05**	<0.05				<0.05		<0.05	*<0.05**	0.062	<0.05	*<0.05**	<0.05	<0.05	*<0.05**	<0.05	*<0.05**					
	03/05/14	8270C	<0.05	<0.1	<0.05	*<0.05**	<0.05				<0.05		<0.05	*<0.05**	<0.05	0.14	*<0.05**	<0.05	<0.05	*<0.05**	<0.05	*<0.05**					
	10/15/13	8270C	<0.01	<0.04	<0.01	*<0.01**	<0.01				<0.01		<0.01	<0.01	<0.01	0.013	<0.01	<0.01	<0.01	*<0.01**	<0.01	<0.01					
	05/28/13	8270C	<0.03	<0.06	<0.03	*<0.03**	<0.03				<0.03		<0.03	<0.03	<0.03	<0.03	*<0.03**	<0.03	<0.03	*<0.03**	<0.03	*<0.03**					
	11/06/12	8270C	0.072	<0.1	<0.05	*<0.05**	<0.05				0.09		<0.05	*<0.05**	0.41	0.7	*<0.05**	<0.05	<0.05	**1.4**	<0.05	*<0.05**					
	05/29/12	8270C	0.07	<0.1	<0.05	*<0.05**	<0.05				0.07		<0.05	*<0.05**	0.31	0.7	*<0.05**	<0.05	0.051	**1.1**	<0.05	*<0.05**					
	11/01/11	8270C	**0.82**	<0.1	<0.05	*<0.05**	<0.05				**0.43**		<0.05	*<0.05**	**2.5**	**5.0**	*<0.05**	<0.05	<0.05	**9.7**	*<0.5**	*<0.05**					
	05/23/11	8270C	**0.42**	<0.1	<0.05	*<0.05**	<0.05				0.26		<0.05	*<0.05**	**2.0**	**3.6**	*<0.05**	<0.05	<0.05	**6.4**	*<0.5**	*<0.05**					
	08/02/10	8270C	**0.6**	<0.02	<0.01	*<0.01**	0.017				**0.36**		0.017	**0.18**	**2.1**	**4.2**	0.025	<0.1	0.11	**8.5**	0.012	<0.01					
	04/20/10	8270C	<0.05	<0.1	<0.05	*<0.05**	<0.05				0.063		<0.05	**0.075**	<0.05	<0.05	*<0.05**	<0.05	0.11	**0.091**	<0.05	*<0.05**					
EP-2	11/21/19	8270D	<0.0005	<0.0005	<0.0005	<0.0005	<0.0005		<0.0005	<0.0005	0.00266		<0.0005	0.00021	0.289	0.389	0.00035	<0.0005	<0.0005	**0.192**	<0.0005	<0.0005					
	04/30/19	8270C	<0.05	0.11	<0.05	*<0.05**	<0.05		<0.05	<0.05	<0.05		<0.05	*<0.04**	<0.05	0.059	*<0.05**	<0.05	<0.05	**0.064**	<0.05	*<0.05**					
	09/06/18	8270C	<0.05	0.062	<0.05	*<0.05**	<0.05		<0.05	<0.05	<0.05		<0.05	*<0.05**	<0.05	0.14	*<0.05**	<0.05	<0.05	**0.12**	<0.05	*<0.05**					
	02/21/18	8270C	0.04	0.072	<0.1	*<0.1**	<0.1		<0.05	<0.05	0.038		<0.01	*<0.1**	0.11	0.29	*<0.1**	<0.1	<0.1	**0.46**	<0.1	*<0.1**					
	10/24/17	8270C	<0.05	0.044	<0.05	*<0.05**	<0.05		<0.05	<0.05	<0.05		<0.05	*<0.05**	<0.05	0.031	<0.01	<0.05	<0.05	*<0.05**	<0.05	*<0.05**					
	03/30/17	8270C	<0.05	0.051	<0.05	**0.039**	<0.05		<0.05	<0.05	0.026		<0.05	*<0.05**	<0.05	0.036	<0.01	<0.05	<0.05	**0.05**	<0.05	*<0.05**					
	08/29/16	8270C	<0.05	0.041	<0.05	**0.015**	<0.05		0.019	0.023	<0.05		<0.05	*<0.05**	<0.05	<0.05	*<0.05**	<0.05	<0.05	*<0.05**	<0.05	*<0.05**					
	03/02/16	8270C	<0.01	<0.02	<0.01	*<0.01**	<0.01				<0.01		<0.01	<0.01	0.014	0.064	<0.01	<0.01	<0.01	**0.094**	<0.01	<0.01					
	09/01/15	8270C	<0.01	<0.02	<0.01	*<0.01**	<0.01				<0.01		<0.01	<0.01	<0.01	0.068	<0.01	<0.01	<0.01	**0.22**	<0.01	<0.01					
	03/24/15	8270C	<0.1	<0.2	<0.1	*<0.1**	<0.1				<0.1		<0.1	*<0.1**	<0.1	<0.1	*<0.1**	<0.1	<0.1	*<0.1**	<0.1	*<0.1**					
	11/12/14	8270C	<0.05	<0.1	<0.05	*<0.05**	<0.05				<0.05		<0.05	*<0.05**	<0.05	<0.05	*<0.05**	<0.05	<0.05	**0.058**	<0.05	*<0.05**					
	03/05/14	8270C	0.044	0.097	<0.01	*<0.01**	<0.01				0.029		<0.01	<0.01	0.14	0.35	<0.01	<0.01	<0.01	**0.87**	<0.01	<0.01					
	10/15/13	8270C	<0.01	0.057	<0.01	*<0.01**	<0.01				0.015		<0.01	<0.01	0.082	0.2	<0.01	<0.01	<0.01	**0.42**	<0.01	<0.01					
	05/28/13	8270C	**0.16**	<0.04	<0.02	*<0.02**	<0.02				**0.38**		<0.02	<0.02	**2.2**	**4.3**	<0.02	<0.02	<0.02	**7.4**	<0.02	*<0.02**					
	11/06/12	8270C	0.11	<0.1	<0.05	*<0.05**	<0.05				0.16		<0.05	*<0.05**	0.92	**1.3**	*<0.05**	<0.05	<0.05	**2.3**	<0.05	*<0.05**					
	05/29/12	8270C	0.11	<0.1	<0.05	*<0.05**	<0.05				0.11		<0.05	*<0.05**	0.58	0.81	*<0.05**	<0.05	<0.05	**1.7**	<0.05	*<0.05**					
	11/01/11	8270C	**0.25**	<0.1	<0.05	*<0.05**	<0.05				0.16		<0.05	*<0.05**	**1.1**	**2.0**	*<0.05**	<0.05	<0.05	**3.6**	<0.05	*<0.05**					
	05/23/11	8270C	**0.27**	<0.02	0.02	**0.013**	<0.01				0.18		<0.01	<0.01	**1.2**	**2.5**	<0.01	<0.01	<0.01	**2.7**	<0.01	<0.01					
	08/02/10	8270C	**0.48**	<0.02	0.011	*<0.05**	0.01				0.24		<0.05	**0.089**	**1.5**	**2.1**	0.027	<0.01	0.014	**3.3**	<0.01	0.011					
	04/20/10	8270C	<0.05	0.16	<0.05	*<0.05**	<0.05				0.06		<0.05	**0.075**	0.88	**1.4**	*<0.05**	0.073	0.1	**2.8**	<0.05	*<0.05**					
EP-3	11/20/19	8270D	<0.0025	<0.0005	<0.0025	0.00126	<0.0025				0.0219		<0.0025	<0.0025	0.154	0.209	*<0.1**	<0.0025	<0.0025	**0.7**							
	04/30/19	8270C	<0.05	<0.1	<0.05	*<0.05**	<0.05				<0.05		<0.05	*<0.05**	<0.05	<0.05	*<0.05**	<0.05	<0.05	*<0.05**							
	09/06/18	8270C	<0.1	0.071	<0.1	*<0.1**	<0.1				<0.1		<0.1	*<0.1**	<0.1	<0.1	*<0.1**	<0.1	<0.1	*<0.1**							
	02/21/18	8270C	0.041	0.072	<0.1	*<0.1**	<0.1				0.039		<0.1	*<0.1**	0.11	0.35	*<0.1**	<0.1	<0.1	**0.45**							
	10/24/17	8270C	<0.05	0.037	<0.05	**0.047**	<0.05		<0.05	<0.05	<0.05		<0.05	*<0.05**	<0.05	<0.05	<0.01	<0.05	<0.05	*<0.05**							
	03/30/17	8270C	<0.05	0.037	<0.05	**0.032**	<0.05		<0.05	<0.05	<0.05		<0.05	*<0.05**	<0.05	0.034	<0.01	<0.05	<0.05	**0.022**							
	08/29/16	8270C	<0.05	0.036	<0.05	**0.018**	<0.05		0.025	0.023	<0.05		<0.05	*<0.05**	<0.05	<0.05	*<0.05**	<0.05	<0.05	*<0.05**							
	03/02/16	8270C	<0.01	0.019	<0.01	*<0.01**	<0.01				<0.01		<0.01	<0.01	0.014	0.095	<0.01	<0.10	<0.01	**0.091**							
	09/01/15	8270C	<0.01	<0.02	<0.01	*<0.01**	<0.01				<0.01		<0.01	<0.01	<0.01	<0.01	<0.01	<0.10	<0.01	*<0.01**							
	03/24/15	8270C	<0.01	<0.02	<0.01	**0.019**	<0.01				<0.01		<0.01	<0.01	<0.01	0.012	<0.01	<0.01	<0.01	**0.34**							
	11/12/14	8270C	<0.05	<0.1	<0.05	*<0.05**	<0.05				<0.05		<0.05	*<0.05**	<0.05	<0.05	*<0.05**	<0.05	<0.05	*<0.05**							
	03/05/14	8270c	0.045	<0.02	<0.01	*<0.01**	<0.01				0.026		<0.01	<0.01	0.11	0.29	<0.01	<0.01	<0.01	**0.79**							
	10/15/13	8270C	<0.05	<0.2	<0.05	*<0.05**	<0.05				0.059		<0.05	*<0.05**	0.25	0.45	*<0.05**	<0.05	<0.05	**1.0**							
	05/28/13	8270C	<0.05	<0.1	<0.05	*<0.05**	<0.05				0.11		<0.05	*<0.05**	**0.96**	**1.9**	*<0.05**	<0.05	<0.05	**3.7**							
	11/06/12	8270C	0.12	<0.04	0.026	*<0.02**	<0.02				0.1		<0.02	<0.02	0.52	**0.96**	<0.02	<0.02	<0.02	**2.0**							
	05/29/12	8270C	<0.1	<0.02	<0.1	*<0.1**	<0.1				0.13		<0.1	*<0.1**	0.87	**1.6**	*<0.1**	<0.1	<0.1	**3.3**							
	11/01/11	8270C	**0.21**	<0.1	<0.05	*<0.05**	<0.05				0.16		<0.05	*<0.05**	**1.1**	**1.5**	*<0.05**	.<0.05	*<0.5**	**2.9**							
	05/23/11	8270C	0.083	<0.02	<0.01	*<0.01**	<0.01				0.092		<0.01	<0.01	0.63	**1.6**	<0.01	<0.01	<0.01	**1.6**							
	08/02/10	8270C	**0.26**	<0.02	<0.01	*<0.01**	<0.01				0.14		<0.05	0.026	0.91	**1.9**	<0.01	<0.01	<0.01	**2.4**							
	04/20/10	8270C	**0.22**	<0.1	<0.05	*<0.05**	<0.05				0.094		<0.05	*<0.05**	0.77	**1.2**	*<0.05**	<0.05	<0.05	**2.8**							

8.15.5 EVAPORATION PONDS (EP-1 thru EP-12B)

Semi-Volatile Organic Compounds Analytical Result Summary

			PARAMETERS																								
STANDARDS			Aniline (mg/L)	Benzoic acid (mg/L)	Benzyl alcohol (mg/L)	Bis (2-ethyl hexyl) phthalate (mg/L)	Carbazole (mg/L)	Chrysene (mg/L)	Di-n-octyl phthalate (mg/L)	Dimethyl phthalate (mg/L)	2,4-Dimethyl phenol (mg/L)	Fluor anthene (mg/L)	Fluorene (mg/L)	2-Methyl naphthalene (mg/L)	2-Methyl phenol (mg/L)	3+4-Methyl phenol (mg/L)	Naphtha lene (mg/L)	2-Nitro phenol (mg/L)	Phenan threne (mg/L)	Phenol (mg/L)	Pyrene (mg/L)	Pyridine (mg/L)	Benz (a) anthra cene (mg/L)	Benzo (a) pyrene (mg/L)	Benzo (b) fluor anthene (mg/L)	Benzo (g,h,i) perylene (mg/L)	Indeno (1,2,3-cd) pyrene (mg/L)
WQCC 20 NMAC 6.2.3103 (DEC 2018)			NE	NE	NE	NE	NE	NE	NE	NE	NE	NE	NE	NE	NE	NE	0.03	NE	NE	0.005	NE	NE	NE	0.0002	NE	NE	NE
40 CFR 141.61 MCL			NE	NE	NE	0.006	NE	NE	NE	NE	NE	NE	NE	NE	NE	NE	NE	NE	NE	NE	NE	NE	NE	0.0002	NE	NE	NE
NMED Tap Water (Rev 2. JUN 2019)			NE	NE	NE	0.0556	NE	0.0343	NE	0.612	0.354	0.802	0.288	0.035	NE	NE	0.00165	NE	0.17	5.76	0.117	NE	0.00012	0.00025	0.000343	NE	0.000343
EPA RSL for Tap Water (NOV 2019)			0.13	75	2	0.056	NE	0.025	0.2	NE	0.36	0.8	0.29	0.036	0.93	0.93	0.00017	NE	NE	5.8	0.12	0.02	0.00003	0.000025	0.0025	NE	0.00025
POND ID	SAMPLE DATE	METHOD																									
EP-4	11/20/19 [1]		EP-4, EP-5, and EP-6 combined into one sample (see EP-6)																								
	04/30/19	8270C	<0.05	0.037	<0.05	<0.05*	<0.05	<0.05*	<0.05	<0.05	<0.05	<0.05	<0.05	<0.05*	<0.05	<0.05	<0.05*	<0.05	<0.05	<0.05*							
	09/06/18	8270C	<0.05	0.033	<0.05	<0.05*	<0.05	<0.05*	<0.05	<0.05	<0.05	<0.05	<0.05	<0.05*	<0.05	<0.05	<0.05*	<0.05	<0.05	<0.05*							
	02/21/18	8270C	0.036	0.071	<0.1	<0.1*	<0.1	<0.1*	<0.1	<0.1	0.037	<0.1	<0.1	<0.1*	0.087	0.31	<0.1*	<0.1	<0.1	0.38							
	10/24/17	8270C	<0.05	0.039	<0.05	<0.05*	<0.05	<0.05*	<0.05	<0.05	<0.05	<0.05	<0.05	<0.05*	<0.05	0.026	<0.01	<0.05	<0.05	<0.05*	<0.05	<0.05*	<0.05*	<0.05*	<0.05*	<0.05	<0.05*
	03/30/17	8270C	<0.05	0.04	<0.05	0.031	<0.05	<0.05*	<0.05	<0.05	<0.05	<0.05	<0.05	<0.05*	<0.05	0.036	<0.01	<0.05	<0.05	0.032	<0.05	<0.05*	<0.05*	<0.05*	<0.05*	<0.05	<0.05*
	08/29/16	8270C	<0.1	0.078	<0.1	0.031	<0.1	0.029	0.036	0.045	<0.1	0.03	<0.1	<0.1*	<0.1	<0.1	<0.1*	<0.1	<0.1	<0.1*							
	03/02/16	8270C	<0.01	<0.02	<0.01	<0.01*	<0.01				<0.01		<0.01	<0.01	<0.01	0.042	<0.01	<0.01	<0.01	0.026							
	09/01/15	8270C	<0.01	<0.02	<0.01	<0.01*	<0.01				<0.01		<0.01	<0.01	<0.01	0.045	<0.01	<0.01	<0.01	<0.01*							
	03/24/15	8270C	<0.1	<0.2	<0.1	<0.1*	<0.1				<0.1		<0.1	<0.1*	<0.1	<0.1	<0.1*	<0.1	<0.1	<0.1*							
	11/12/14	8270C	<0.05	<0.1	<0.05	<0.05*	<0.05				<0.05		<0.05	<0.05*	<0.05	<0.05	<0.05*	<0.05	<0.05	<0.05*							
	03/05/14	8270C	0.04	<0.02	<0.01	<0.01*	<0.01				0.022		<0.01	<0.01	0.08	0.21	<0.01	<0.01	<0.01	0.42							
	10/15/13	8270C	<0.05	<0.2	<0.05	<0.05*	<0.05				<0.05		<0.05	<0.05*	0.18	0.34	<0.05*	<0.05	<0.05	0.67							
	05/28/13	8270C	0.029	<0.04	<0.02	<0.02*	<0.02				0.071		<0.02	<0.02	0.48	1.0	<0.02	<0.02	<0.02	1.4							
	11/06/12	8270C	0.06	<0.1	<0.05	<0.05*	<0.05				0.072		<0.05	<0.05*	0.29	0.53	<0.05*	<0.05	<0.05	1.1							
	05/29/12	8270C	<0.05	<0.1	<0.05	<0.05*	<0.05				0.11		<0.05	<0.05*	0.78	1.2	<0.05*	<0.05	<0.05	2.9							
	11/01/11	8270C	0.067	<0.1	<0.05	<0.05*	<0.05				0.11		<0.05	<0.05*	0.64	0.84	<0.05*	<0.05	<0.05	1.1							
	05/23/11	8270C	0.22	<0.02	<0.01	<0.01*	<0.01				0.28		<0.01	<0.01	1.2	2.8	<0.01	<0.01	<0.01	2.3							
	08/02/10	8270C	0.21	<0.02	<0.01	0.015	<0.01				0.11		<0.05	<0.01	0.55	1.3	<0.01	<0.01	<0.01	1.6							
	04/20/10	8270C	0.18	<0.1	<0.05	<0.05*	<0.05				0.073		<0.05	<0.05*	0.62	0.96	<0.05*	<0.05	<0.05	2.1							
EP-5	11/20/19 [1]		EP-4, EP-5, and EP-6 combined into one sample (see EP-6)																								
	04/30/19	8270C	<0.05	0.036	<0.05	<0.05*	<0.05				<0.05		<0.05	<0.05*	<0.05	<0.05	<0.05*	<0.05	<0.05	<0.05*							
	09/06/18	8270C	<0.1	0.069	<0.1	<0.1*	<0.1				<0.1		<0.1	<0.1*	<0.1	<0.1	<0.1*	<0.1	<0.1	<0.1*							
	02/21/18	8270C	<0.1	<0.2	<0.1	<0.1*	<0.1				0.032		<0.1	<0.1*	0.068	0.22	<0.1*	<0.1	<0.1	0.29							
	10/24/17	8270C	<0.1	<0.2	<0.1	4.8	<0.1		<0.1	<0.1	<0.1		<0.1	<0.05*	<0.1	<0.1	<0.01	<0.1	<0.1	<0.1*							
	03/30/17	8270C	<0.05	0.031	<0.05	0.033	<0.05		<0.05	<0.05	<0.05		<0.05	<0.05*	<0.05	<0.05	<0.01	<0.05	<0.05	<0.05*							
	08/29/16	8270C	<0.02	0.012	<0.02	0.0059	<0.02		0.0068	0.0089	<0.02		<0.02	<0.02	<0.02	<0.02	<0.02	<0.02	<0.02	<0.02*							
	03/02/16	8270C	<0.01	<0.02	<0.01	<0.01*	<0.01				<0.01		<0.01	<0.01	<0.01	0.034	<0.01	<0.01	<0.01	0.018							
	09/01/15	8270C	<0.012	<0.024	<0.012	<0.012*	<0.012				<0.012		<0.012	<0.012	<0.012	<0.012	<0.012	<0.012	<0.012	<0.012*							
	03/24/15	8270C	<0.01	<0.02	<0.01	0.016	<0.01				<0.1		<0.01	<0.01	<0.01	<0.01	<0.01	<0.01	<0.01	<0.01*							
	11/12/14	8270C	<0.01	<0.02	<0.01	0.013	<0.01				<0.01		<0.01	<0.01	<0.01	<0.01	<0.01	<0.01	<0.01	<0.01*							
	03/05/14	8270C	0.023	<0.02	<0.01	<0.01*	<0.01				0.018		<0.01	<0.01	0.082	0.2	<0.01	<0.01	<0.01	0.26							
	10/15/13	8270C	<0.05	<0.2	<0.05	<0.05*	<0.05				<0.05		<0.05	<0.05*	0.16	0.26	<0.05*	<0.05	<0.05	0.54							
	05/28/13	8270C	0.032	<0.04	<0.02	<0.02*	<0.02				0.084		<0.02	<0.02	0.46	0.93	<0.02	<0.02	<0.02	1.2							
	11/06/12	8270C	<0.05	<0.1	<0.05	<0.05*	<0.05				0.074		<0.05	<0.05*	0.27	0.4	<0.05*	<0.05	<0.05	0.9							
	05/29/12	8270C	0.057	<0.1	<0.05	<0.05*	<0.05				<0.05		<0.05	<0.05*	0.82	1.1	<0.05*	<0.05	<0.05	2.7							
	11/01/11	8270C	<0.05	<0.1	<0.05	<0.05*	<0.05				<0.05		<0.05	<0.05*	0.1	0.089	<0.05*	<0.05	<0.05	0.052							
	05/23/11	8270C	0.11	<0.02	<0.01	<0.01*	<0.01				0.22		<0.01	<0.01	1.1	2.6	<0.01	<0.01	<0.01	1.8							
	08/02/10	8270C	0.12	<0.1	<0.05	<0.05*	<0.05				0.09		<0.05	<0.05*	0.6	1.1	<0.05*	<0.05	<0.05	1.2							
	04/20/10	8270C	0.17	<0.1	<0.05	<0.05*	<0.05				0.074		<0.05	<0.05*	0.64	1.0	<0.05*	<0.05	<0.05	2.2							
EP-6	11/20/2019 [1]	8270D	<0.0005	<0.0005	<0.0005	<0.0005	<0.0005				<0.0005		<0.0005	<0.0005	<0.0005	<0.0005	<0.0005	<0.0005	<0.0005	<0.0005			<0.0001				
	04/29/19	8270C	<0.05	0.037	<0.05	<0.05*	<0.05		<0.05	<0.05	<0.05		<0.05	<0.05*	<0.05	<0.05	<0.05*	<0.05	<0.05	<0.05*			<0.05*				
	09/07/18	8270C	<0.1	0.065	<0.1	<0.1*	<0.1		<0.05	<0.05	<0.1		<0.1	<0.1*	<0.1	<0.1	<0.1*	<0.1	<0.1	<0.1*			<0.1*				
	02/21/18	8270C	<0.1	0.071	<0.1	0.063	<0.1		<0.05	<0.05	<0.1		<0.1	<0.1*	0.034	0.085	<0.1*	<0.1	<0.1	0.13			0.051				
	10/24/17	8270C	<0.1	<0.1	<0.05	1.1	<0.05		<0.05	<0.05	<0.05		<0.05	<0.05*	<0.05	<0.05	<0.01	<0.05	<0.05	<0.05*	<0.05	<0.05*	<0.05*	<0.05*	<0.05*	<0.05	<0.05*
	03/30/17	8270C	<0.05	0.031	<0.05	0.033	<0.05		<0.05	<0.05	<0.05		<0.05	<0.05*	<0.05	<0.05	<0.01	<0.05	<0.05	<0.05*	<0.05	<0.05*	<0.05*	<0.05*	<0.05*	<0.05	<0.05*
	08/29/16	8270C	<0.01	0.0062	<0.01	0.0034	<0.01		0.0033	0.0043	<0.01		<0.01	<0.01	<0.01	<0.01	<0.01	<0.01	<0.01	<0.01*							
	03/02/16	8270C	<0.01	<0.02	<0.01	<0.01*	<0.01				<0.01		<0.01	<0.01	<0.012	0.0	<0.01	<0.01	<0.01	0.014							
	09/01/15	8270C	<0.012	<0.024	<0.012	<0.012*	<0.012				<0.012		<0.012	<0.012	<0.012	<0.012	<0.012	<0.01	<0.012	<0.012*							
	03/25/15	8270C	<0.1	<0.2	<0.1	<0.1*	<0.1				<0.1		<0.1	<0.1*	<0.1	<0.1	<0.1*	<0.1	<0.1	<0.1*							
	11/12/14	8270C	<0.01	<0.02	<0.01	<0.01*	<0.01				<0.01		<0.01	<0.01	<0.01	<0.01	<0.01	<0.01	<0.01	<0.01*							
	03/05/14	8270C	<0.05	<0.1	<0.05	<0.05*	<0.05				<0.05		<0.05	<0.05*	<0.05	0.088	<0.05*	<0.05	<0.05	0.28							
	10/15/13	8270C	<0.01	<0.04	<0.01	<0.01*	<0.01				<0.01		<0.01	<0.01	<0.01	<0.01	<0.01	<0.01	<0.01	<0.01*							
	05/28/13	8270C	<0.1	<0.1	<0.2	<0.1*	<0.1				<0.1		<0.1	<0.1*	0.26	0.23	<0.1*	<0.1	<0.1	0.14							
	11/06/12	8270C	<0.05	<0.1	<0.05	<0.05*	<0.05				<0.05		<0.05	<0.05*	<0.05	<0.05	<0.05*	<0.05	<0.05	<0.05*							
	05/29/12	8270C	0.036	<0.02	<0.01	<0.01*	<0.01				0.034		<0.01	<0.01	0.43	0.41	<0.01	<0.01	<0.01	0.72							
	11/01/11	8270C	<0.01	<0.02	<0.01	<0.01*	<0.01				<0.01		<0.01	<0.01	<0.01	<0.01	<0.01	<0.01	<0.01	<0.01*							
	05/23/11	8270C	0.069	<0.02	<0.01	0.019	<0.01				0.11		<0.01	<0.01	0.56	1.1	<0.01	<0.01	<0.01	1.3							
	08/02/10	8270C	<0.01	<0.02	<0.01	0.011	<0.01				<0.01		<0.01	<0.01	<0.01	<0.01	<0.01	<0.01	<0.01	0.032							
	04/20/10	8270C	0.081	<0.1	<0.05	<0.05*	<0.05				<0.05		<0.05	<0.05*	0.3	0.44	<0.05*	<0.05	<0.05	0.38							

8.15.5 EVAPORATION PONDS (EP-1 thru EP-12B)

Semi-Volatile Organic Compounds Analytical Result Summary

			PARAMETERS																								
STANDARDS			Aniline (mg/L)	Benzoic acid (mg/L)	Benzyl alcohol (mg/L)	Bis (2-ethyl hexyl) phthalate (mg/L)	Carbazole (mg/L)	Chrysene (mg/L)	Di-n-octyl phthalate (mg/L)	Dimethyl phthalate (mg/L)	2,4-Dimethyl phenol (mg/L)	Fluor anthene (mg/L)	Fluorene (mg/L)	2-Methyl naphthalene (mg/L)	2-Methyl phenol (mg/L)	3+4-Methyl phenol (mg/L)	Naphtha lene (mg/L)	2-Nitro phenol (mg/L)	Phenan threne (mg/L)	Phenol (mg/L)	Pyrene (mg/L)	Pyridine (mg/L)	Benz (a) anthra cene (mg/L)	Benzo (a) pyrene (mg/L)	Benzo (b) fluor anthene (mg/L)	Benzo (g,h,i) perylene (mg/L)	Indeno (1,2,3-cd) pyrene (mg/L)
WQCC 20 NMAC 6.2.3103 (DEC 2018)			NE	NE	NE	NE	NE	NE	NE	NE	NE	NE	NE	NE	NE	NE	**0.03**	NE	NE	**0.005**	NE	NE	NE	**0.0002**	NE	NE	NE
40 CFR 141.61 MCL			NE	NE	NE	**0.006**	NE	NE	NE	NE	NE	NE	NE	NE	NE	NE	NE	NE	NE	NE	NE	NE	NE	0.0002	NE	NE	NE
NMED Tap Water (Rev 2. JUN 2019)			NE	NE	NE	0.0556	NE	**0.0343**	NE	**0.612**	**0.354**	**0.802**	**0.288**	**0.035**	NE	NE	0.00165	NE	**0.17**	5.76	**0.117**	NE	**0.00012**	0.00025	**0.000343**	NE	**0.000343**
EPA RSL for Tap Water (NOV 2019)			**0.13**	**75**	**2**	0.056	NE	0.025	**0.2**	NE	0.36	0.8	0.29	0.036	**0.93**	**0.93**	0.00017	NE	NE	5.8	0.12	**0.02**	0.00003	0.000025	0.0025	NE	0.00025
POND ID	SAMPLE DATE	METHOD																									
EP-7	11/20/19	8270D	<0.0005	<0.0005	<0.0005	<0.0005	<0.0005				<0.0005		<0.0005	<0.0005	<0.0005	<0.0005	<0.0005	<0.0005	<0.0005	<0.0005							
	04/29/19	8270C	<0.01	<0.02	<0.01	*<0.01**	<0.01				<0.01		<0.01	<0.01	<0.01	<0.01	<0.01	<0.01	<0.01	*<0.01**							
	09/07/18	8270C	<0.05	<0.05	<0.05	*<0.05**	<0.05				<0.05		<0.05	*<0.05**	<0.05	<0.05	*<0.05**	<0.05	<0.05	*<0.05**							
	02/23/18	8270C	<0.05	0.046	<0.05	*<0.05**	<0.05		<0.05	<0.05	<0.05		<0.05	*<0.05**	<0.05	<0.05	*<0.05**	<0.05	<0.05	*<0.05**							
	10/24/17	8270C	<0.05	<0.1	<0.05	*<0.05**	<0.05		<0.05	<0.05	<0.05		<0.05	*<0.05**	<0.05	<0.05	<0.01	<0.05	<0.05	*<0.05**							
	03/30/17	8270C	<0.05	0.036	<0.05	**0.028**	<0.05		<0.05	<0.05	<0.05		<0.05	*<0.05**	<0.05	<0.05	<0.01	<0.05	<0.05	*<0.05**							
	08/30/16	8270C	<0.1	<0.02	<0.01	0.0037	<0.01		0.0046	0.0041	<0.01		<0.01	<0.01	<0.01	<0.01	<0.01	<0.01	<0.01	*<0.01**							
	03/02/16	8270C	<0.01	<0.02	<0.01	*<0.01**	<0.01				<0.01		<0.01	<0.01	<0.01	<0.01	<0.01	<0.01	<0.01	*<0.01**							
	09/01/15	8270C	<0.012	<0.024	<0.012	*<0.012**	<0.012				<0.012		<0.012	<0.012	<0.012	<0.012	<0.012	<0.012	<0.012	*<0.012**							
	03/25/15	8270C0	<0.01	<0.02	<0.01	*<0.01**	<0.01				<0.01		<0.01	<0.01	<0.10	<0.01	<0.01	<0.01	<0.01	*<0.01**							
	11/12/14	8270C	<0.01	<0.02	<0.01	*<0.01**	<0.01				<0.01		<0.01	<0.01	<0.01	<0.01	<0.01	<0.01	<0.01	*<0.01**							
	03/05/14	8270C	<0.01	<0.02	<0.01	*<0.01**	<0.01				<0.01		<0.01	<0.01	<0.01	<0.01	<0.01	<0.01	<0.01	*<0.01**							
	10/15/13	8270C	<0.01	<0.04	<0.01	*<0.01**	<0.01				<0.01		<0.01	<0.01	<0.01	<0.01	<0.01	<0.01	<0.01	*<0.01**							
	05/28/13	8270C	<0.03	<0.06	<0.03	*<0.03**	<0.03				<0.03		<0.03	<0.03	<0.03	<0.03	*<0.03**	<0.03	<0.03	*<0.03**							
	11/06/12	8270C	<0.05	<0.1	<0.05	*<0.05**	<0.05				<0.05		<0.05	*<0.05**	<0.05	<0.05	*<0.05**	<0.05	<0.05	*<0.05**							
	05/29/12	8270C	<0.01	<0.02	<0.01	*<0.01**	<0.01				<0.01		<0.01	<0.01	<0.01	<0.01	<0.01	<0.01	<0.01	*<0.01**							
	11/01/11	8270C	<0.01	<0.02	<0.01	*<0.01**	<0.01				<0.01		<0.01	<0.01	<0.01	0.018	<0.01	<0.01	<0.01	**0.04**							
	05/23/11	8270C	<0.01	<0.02	<0.01	**0.019**	<0.01				<0.01		<0.01	<0.01	<0.01	0.045	<0.01	<0.01	<0.01	**0.17**							
	08/02/10	8270C	<0.01	<0.02	<0.01	**0.011**	<0.01				<0.01		<0.01	<0.01	<0.01	<0.01	<0.01	<0.01	<0.01	*<0.01**							
	04/20/10	8270C	<0.05	<0.1	<0.05	*<0.05**	<0.05				<0.05		<0.05	*<0.05**	<0.05	<0.05	*<0.05**	<0.05	<0.05	*<0.05**							
EP-8	11/20/19	8270D	<0.0005	<0.0005	<0.0005	<0.0005	<0.0005	<0.0005	<0.0005	<0.0005	<0.0005	<0.0005	<0.0005	<0.0005	<0.0005	<0.0005	<0.0005	<0.0005	<0.0005	**0.0107**	<0.0005		<0.0001	<0.0005	<0.0001	<0.0005	<0.0002
	04/29/19	8270C	<0.01	<0.02	<0.01	*<0.01**	<0.01	<0.01	<0.01	<0.01	<0.01	<0.01	<0.01	<0.01	<0.01	<0.01	<0.01	<0.01	<0.01	*<0.01**	<0.01		*<0.01**	*<0.01**	*<0.01**	<0.01	*<0.01**
	09/07/18	8270C	<0.05	<0.1	<0.05	*<0.05**	<0.05	*<0.05**	<0.05	<0.05	<0.05	<0.05	<0.05	*<0.05**	<0.05	<0.05	*<0.05**	<0.05	<0.05	*<0.05**	<0.05		*<0.05**	*<0.05**	*<0.05**	<0.05	*<0.05**
	02/23/18	8270C	<0.05	0.046	<0.05	*<0.05**	<0.05	*<0.05**	<0.05	<0.05	<0.05	<0.05	<0.05	*<0.05**	<0.05	<0.05	*<0.05**	<0.05	<0.05	*<0.05**	<0.05		*<0.05**	*<0.05**	*<0.05**	<0.05	*<0.05**
	10/24/17	8270C	<0.05	<0.1	<0.05	*<0.05**	<0.05	*<0.05**	<0.05	<0.05	<0.05	<0.05	<0.05	*<0.05**	<0.05	<0.05	<0.01	<0.05	<0.05	*<0.05**	<0.05		*<0.05**	*<0.05**	*<0.05**	<0.05	*<0.05**
	03/30/17	8270C	<0.05	0.031	<0.05	**0.033**	<0.05	*<0.05**	<0.05	<0.05	<0.05	<0.05	<0.05	*<0.05**	<0.05	<0.05	<0.01	<0.05	<0.05	*<0.05**	<0.05		*<0.05**	*<0.05**	*<0.05**	<0.05	*<0.05**
	08/30/16	8270C	<0.1	<0.01	<0.01	0.0037	0.0028	0.0071	0.0036	0.004	<0.01	0.013	<0.01	<0.01	<0.01	<0.01	<0.01	<0.01	0.0044	*<0.01**	0.012		**0.0068**	**0.004**	**0.0078**	0.0038	**0.0033**
	09/01/15	8270C	<0.01	<0.02	<0.01	*<0.01**	<0.01				<0.01		<0.01	<0.01	<0.01	<0.01	<0.01	<0.01	<0.01	*<0.01**							
	03/25/15	8270C	<0.01	<0.02	<0.01	*<0.01**	<0.01				<0.01		<0.01	<0.01	<0.01	<0.01	<0.01	<0.01	<0.01	*<0.01**							
	11/12/14	8270C	<0.011	<0.022	<0.011	**0.018**	<0.011				<0.01		<0.011	<0.011	<0.011	<0.011	<0.011	<0.011	<0.011	*<0.011**							
	03/05/14	8270C	<0.01	<0.02	<0.01	*<0.01**	<0.01				<0.01		<0.01	<0.01	<0.01	<0.01	<0.01	<0.01	<0.01	*<0.01**							
	10/15/13	8270C	<0.01	<0.04	<0.01	*<0.01**	<0.01				<0.01		<0.01	<0.01	<0.01	<0.01	<0.01	<0.01	<0.01	*<0.01**							
	05/28/13	8270C	<0.01	<0.02	<0.01	*<0.01**	<0.01				<0.01		<0.01	<0.01	<0.01	<0.01	<0.01	<0.01	<0.01	*<0.01**							
	11/06/12	8270C	<0.05	<0.1	<0.05	*<0.05**	<0.05				<0.05		<0.05	*<0.05**	<0.05	<0.05	*<0.05**	<0.05	<0.05	*<0.05**							
	05/29/12	8270C	<0.01	<0.02	<0.01	*<0.01**	<0.01				<0.01		<0.01	<0.01	<0.01	<0.01	<0.01	<0.01	<0.01	*<0.01**							
	11/01/11	8270C	<0.01	<0.02	<0.01	*<0.01**	<0.01				<0.01		<0.01	<0.01	<0.01	<0.01	<0.01	<0.01	<0.01	*<0.01**							
	05/23/11	8270C	<0.01	<0.02	<0.01	*<0.01**	<0.01				<0.01		<0.01	<0.01	<0.01	<0.01	<0.01	<0.01	<0.01	*<0.01**							
	08/02/10	8270C	<0.01	<0.02	<0.01	*<0.01**	<0.01				<0.01		<0.01	<0.01	<0.01	<0.01	<0.01	<0.01	<0.01	*<0.01**							
	04/20/10	8270C	<0.05	<0.1	<0.05	*<0.05**	<0.05				<0.05		<0.05	*<0.05**	<0.05	<0.05	*<0.05**	<0.05	<0.05	*<0.05**							

8.15.5 EVAPORATION PONDS (EP-1 thru EP-12B)

Semi-Volatile Organic Compounds Analytical Result Summary

			PARAMETERS																								
STANDARDS			Aniline (mg/L)	Benzoic acid (mg/L)	Benzyl alcohol (mg/L)	Bis (2-ethyl hexyl) phthalate (mg/L)	Carbazole (mg/L)	Chrysene (mg/L)	Di-n-octyl phthalate (mg/L)	Dimethyl phthalate (mg/L)	2,4-Dimethyl phenol (mg/L)	Fluor anthene (mg/L)	Fluorene (mg/L)	2-Methyl naphthalene (mg/L)	2-Methyl phenol (mg/L)	3+4-Methyl phenol (mg/L)	Naphtha lene (mg/L)	2-Nitro phenol (mg/L)	Phenan threne (mg/L)	Phenol (mg/L)	Pyrene (mg/L)	Pyridine (mg/L)	Benz (a) anthra cene (mg/L)	Benzo (a) pyrene (mg/L)	Benzo (b) fluor anthene (mg/L)	Benzo (g,h,i) perylene (mg/L)	Indeno (1,2,3-cd) pyrene (mg/L)
WQCC 20 NMAC 6.2.3103 (DEC 2018)			NE	NE	NE	NE	NE	NE	NE	NE	NE	NE	NE	NE	NE	NE	0.03	NE	NE	0.005	NE	NE	NE	0.0002	NE	NE	NE
40 CFR 141.61 MCL			NE	NE	NE	0.006	NE	NE	NE	NE	NE	NE	NE	NE	NE	NE	NE	NE	NE	NE	NE	NE	NE	0.0002	NE	NE	NE
NMED Tap Water (Rev 2. JUN 2019)			NE	NE	NE	0.0556	NE	0.0343	NE	0.612	0.354	0.802	0.288	0.035	NE	NE	0.00165	NE	0.17	5.76	0.117	NE	0.00012	0.00025	0.000343	NE	0.000343
EPA RSL for Tap Water (NOV 2019)			0.13	75	2	0.056	NE	0.025	0.2	NE	0.36	0.8	0.29	0.036	0.93	0.93	0.00017	NE	NE	5.8	0.12	0.02	0.00003	0.000025	0.0025	NE	0.00025
POND ID	SAMPLE DATE	METHOD																									
EP-9	11/20/19	8270D	<0.0005	<0.0005	<0.005	<0.0005	<0.0005		<0.0005	<0.0005	<0.0005		<0.0005	<0.0005	<0.0005	<0.0005	<0.0005	<0.0005	<0.0005	0.00062							
	04/29/19	8270C	<0.05	<0.1	<0.05	<0.05*	<0.05		<0.05	<0.05	<0.05		<0.05	<0.05*	<0.05	<0.05	<0.05*	<0.05	<0.05	<0.05*							
	09/07/18	8270C	<0.01	0.0063	<0.01	<0.01*	<0.01		<0.01	<0.01	<0.01		<0.01	<0.01	<0.01	<0.01	<0.01	<0.01	<0.01	<0.01*							
	02/23/18	8270C	<0.01	0.0074	<0.01	<0.01*	<0.01		<0.01	<0.01	<0.01		<0.01	<0.01	<0.01	<0.01	<0.01	<0.01	<0.01	<0.01*							
	10/24/17	8270C	<0.05	<0.1	<0.05	<0.05*	<0.05		<0.05	<0.05	<0.05		<0.05	<0.05*	<0.05	<0.05	<0.01	<0.05	<0.05	<0.05*							
	03/30/17	8270C	<0.01	0.0061	<0.01	0.0062	<0.01		<0.01	<0.01	<0.01		<0.01	<0.01	<0.01	<0.01	<0.01	<0.01	<0.01	<0.01*							
	08/30/16	8270C	<0.01	<0.02	<0.01	0.004	<0.01		0.0034	0.0042	<0.01		<0.01	<0.01	<0.01	<0.01	<0.01	<0.01	<0.01	<0.01*							
	03/02/16	8270C	<0.01	<0.02	<0.01	<0.01*	<0.01				<0.01		<0.01	<0.01	<0.01	<0.01	<0.01	<0.01	<0.01	<0.01*							
	09/01/15	8270C	<0.01	<0.02	<0.01	<0.01*	<0.01				<0.01		<0.01	<0.01	<0.01	<0.01	<0.01	<0.01	<0.01	<0.01*							
	03/25/15	8270C	<0.01	<0.02	<0.01	0.014	<0.01				<0.01		<0.01	<0.01	<0.01	<0.01	<0.01	<0.01	<0.01	<0.01*							
	11/13/14	8270C	<0.01	<0.02	<0.01	0.018	<0.01				<0.01		<0.01	<0.01	<0.01	<0.01	<0.01	<0.01	<0.01	<0.01*							
	03/05/14	8270C	<0.01	<0.02	<0.01	<0.01*	<0.01				<0.01		<0.01	<0.01	<0.01	<0.01	<0.01	<0.01	<0.01	<0.01*							
	10/15/13	8270C	<0.01	<0.04	<0.01	<0.01*	<0.01				<0.01		<0.01	<0.01	<0.01	<0.01	<0.01	<0.01	<0.01	<0.01*							
	05/28/13	8270C	<0.03	<0.06	<0.03	<0.03*	<0.03				<0.03		<0.03	<0.03	<0.03	<0.03	<0.03*	<0.03	<0.03	<0.03*							
	11/06/12	8270C	<0.05	<0.1	<0.05	<0.05*	<0.05				<0.05		<0.05	<0.05*	<0.05	<0.05	<0.05*	<0.05	<0.05	<0.05*							
	05/29/12	8270C	<0.01	<0.02	<0.01	<0.01*	<0.01				<0.01		<0.01	<0.01	0.07	0.12	<0.01	<0.01	<0.01	0.23							
	11/01/11	8270C	<0.02	<0.04	<0.02	<0.02*	<0.02				<0.02		<0.02	<0.02	<0.02	<0.02	<0.02	<0.02	<0.02	<0.02*							
	05/23/11	8270C	<0.02	<0.04	<0.02	0.022	<0.02				<0.02		<0.02	<0.02	<0.02	<0.02	<0.02	<0.02	<0.02	<0.02*							
	11/16/10	8270C	<0.01	<0.02	<0.01	0.013	<0.01				<0.01		<0.01	<0.01	<0.01	<0.01	<0.01	<0.01	<0.01	<0.01*							
	04/20/10	8270C	<0.05	<0.1	<0.05	<0.05*	<0.05				<0.05		<0.05	<0.05*	<0.05	<0.05	<0.05*	<0.05	<0.05	<0.05*							
EP-11	11/21/2019[2]	--	Not sampled - dry																								
	04/29/19	8270C	<0.01	<0.02	<0.01	<0.01*	<0.01				<0.01		<0.01	<0.01	<0.01	<0.01	<0.01	<0.01	<0.01	<0.01*							
	09/07/18	8270C	<0.1	0.072	<0.1	<0.1*	<0.1				<0.1		<0.1	<0.1*	<0.1	<0.1	<0.1*	<0.1	<0.1	<0.1*							
	02/23/18	8270C	<0.05	0.041	<0.05	<0.05*	<0.05		<0.05	<0.05	<0.05		<0.05	<0.05*	<0.05	<0.05	<0.05*	<0.05	<0.05	<0.05*							
	10/24/17	8270C	<0.1	<0.2	<0.1	<0.1*	<0.1		<0.1	<0.1	<0.1		<0.1	<0.1*	<0.1	<0.1	<0.01	<0.1	<0.1	<0.1*							
	03/30/17	8270C	<0.05	0.033	<0.05	0.03	<0.05		0.031	<0.05	<0.05		<0.05	<0.05*	<0.05	<0.05	<0.01	<0.05	<0.05	<0.05*							
	08/30/16	8270C	<0.01	0.0076	<0.01	0.0041	<0.01		0.0052	0.0044	<0.01		<0.01	<0.01	<0.01	<0.01	<0.01	<0.01	<0.01	<0.01*							
	03/02/16	8270C	<0.01	<0.02	<0.01	<0.01*	<0.01				<0.01		<0.01	<0.01	<0.01	<0.01	<0.01	<0.01	<0.01	<0.01*							
	09/01/15	8270C	<0.01	<0.02	<0.01	0.013	<0.01				<0.01		<0.01	<0.01	<0.01	<0.01	<0.01	<0.01	<0.01	<0.01*							
	03/25/15	8270C	<0.01	<0.01	<0.01	0.011	<0.01				<0.01		<0.01	<0.01	<0.01	<0.01	<0.01	<0.01	<0.01	<0.01*							
	11/12/14	8270C	<0.01	<0.02	<0.01	0.013	<0.01				<0.01		<0.01	<0.01	<0.01	<0.01	<0.01	<0.01	<0.01	<0.01*							
	03/05/14	8270C	<0.05	<0.1	<0.05	<0.05*	<0.05				<0.05		<0.05	<0.05*	<0.05	<0.05	<0.05*	<0.05	<0.05	<0.05*							
	10/15/13	8270C	<0.01	<0.04	<0.01	<0.01*	<0.01				<0.01		<0.01	<0.01	<0.01	<0.01	<0.01	<0.01	<0.01	<0.01*							
	05/28/13	8270C	<0.02	<0.04	<0.02	<0.02*	<0.02				<0.02		<0.02	<0.02	<0.02	<0.02	<0.02	<0.02	<0.02	<0.02*							
	11/06/12	8270C	<0.05	<0.1	<0.05	<0.05*	<0.05				<0.05		<0.05	<0.05*	0.2	0.33	<0.05*	<0.05	<0.05	0.68							
	05/29/12	8270C	<0.05	<0.1	<0.05	<0.05*	<0.05				<0.05		<0.05	<0.05*	<0.05	<0.05	<0.05*	<0.05	<0.05	<0.05*							
	11/01/11	8270C	0.067	<0.1	<0.05	<0.05*	<0.05				0.055		<0.05	<0.05*	0.46	0.75	<0.05*	<0.05	<0.05	1.3							
	05/23/11	8270C	<0.01	<0.02	<0.01	0.017	<0.01				0.065		<0.01	<0.01	0.42	1.1	<0.01	<0.01	<0.01	2.1							
	11/16/10	8270C	<0.01	<0.02	<0.01	<0.01*	<0.01				<0.01		<0.01	<0.01	<0.01	<0.01	<0.01	<0.01	<0.01	<0.01*							
	04/20/10	8270C	<0.01	<0.02	<0.05	<0.05*	<0.05				<0.01		<0.05	<0.01	<0.01	<0.01	<0.01	<0.01	<0.01	<0.01*							
EP-12A	11/21/19	8270D	<0.0025	<0.0005	<0.0025	<0.0025	<0.0025		<0.0025	<0.0025	0.0123		<0.0025	<0.0025	0.0895	0.0932	<0.0025	<0.0025	<0.0025	0.215							
	4/29/2019[2]	--	Not sampled - dry																								
	02/23/18	8270C	<0.1	0.094	<0.1	<0.1*	<0.1		<0.1	<0.1	<0.1		<0.1	<0.1*	0.075	0.19	<0.1*	<0.1	<0.1	0.25							
	10/24/17	8270C	<0.1	<0.2	<0.1	<0.1*	<0.1		<0.1	<0.1	<0.1		<0.1	<0.1*	<0.1	<0.1	<0.01	<0.1	<0.1	<0.1*							
	03/30/17	8270C	<0.05	0.032	<0.05	0.027	<0.05		<0.05	<0.05	<0.05		<0.05	<0.05*	<0.05	<0.05	<0.01	<0.05	<0.05	<0.05*							
	08/30/16	8270C	<0.02	<0.04	<0.02	0.0062	<0.02		0.007	0.0084	<0.02		<0.02	<0.02	<0.02	<0.02	<0.02	<0.02	<0.02	<0.02*							
	03/02/16	8270C	<0.01	<0.02	<0.01	<0.01*	<0.01				<0.01		<0.01	<0.01	<0.01	<0.01	<0.01	<0.01	<0.01	<0.01*							
	09/01/15	8270C	<0.01	<0.02	<0.01	<0.01*	<0.01				<0.01		<0.01	<0.01	<0.01	<0.01	<0.01	<0.01	<0.01	<0.01*							
	03/25/15	8270C	<0.1	<0.2	<0.1	<0.1*	<0.1				<0.1		<0.1	<0.1*	<0.1	<0.1	<0.1*	<0.1	<0.1	<0.1*							
	11/12/14	8270C	<0.01	<0.02	<0.01	0.012	<0.01				<0.01		<0.01	<0.01	<0.01	<0.01	<0.01	<0.01	<0.01	<0.01*							
	03/05/14	8270C	<0.05	<0.1	<0.05	<0.05*	<0.05				<0.05		<0.05	<0.05*	<0.05	<0.05	<0.05*	<0.05	<0.05	0.2							
	10/15/13	8270C	<0.05	<0.2	<0.05	<0.05*	<0.05				<0.05		<0.05	<0.05*	0.1	0.16	<0.05*	<0.05	<0.05	0.35							
	05/28/13	8270C	0.031	<0.01	<0.01	<0.01*	<0.01				0.11		<0.01	<0.01	0.56	1.3	<0.01	<0.01	<0.01	2.0							
	11/06/12	8270C	<0.05	<0.1	<0.05	<0.05*	<0.05				<0.05		<0.05	<0.05*	0.15	0.21	<0.05*	<0.05	<0.05	0.46							
	05/29/12	8270C	<0.05	<0.1	<0.05	<0.05*	<0.05				<0.05		<0.05	<0.05*	<0.05	<0.05	<0.05*	<0.05	<0.05	<0.05*							
	11/01/11	8270C	0.16	<0.1	<0.05	<0.05*	<0.05				0.15		<0.05	<0.05*	0.94	1.3	<0.05*	<0.05	<0.05	2.7							
	05/23/11	8270C	0.14	<0.02	<0.01	<0.01*	<0.01				0.19		<0.01	<0.01	1.2	2.7	<0.01	<0.01	<0.01	3.6							
	11/16/10	8270C	<0.01	<0.02	<0.01	<0.01*	<0.01				<0.01		<0.01	<0.01	<0.01	<0.01	<0.01	<0.01	<0.01	<0.01*							
	04/20/10	8270C	0.067	<0.1	<0.05	<0.05*	<0.05				<0.05		<0.05	<0.05*	0.12	0.17	<0.05*	<0.05	<0.05	0.016							

8.15.5 EVAPORATION PONDS (EP-1 thru EP-12B)

Semi-Volatile Organic Compounds Analytical Result Summary

			PARAMETERS																							
STANDARDS			Aniline (mg/L)	Benzoic acid (mg/L)	Benzyl alcohol (mg/L)	Bis (2-ethyl hexyl) phthalate (mg/L)	Carbazole (mg/L)	Chrysene (mg/L)	Di-n-octyl phthalate (mg/L)	Dimethyl phthalate (mg/L)	2,4-Dimethyl phenol (mg/L)	Fluor anthene (mg/L)	Fluorene (mg/L)	2-Methyl naphthalene (mg/L)	2-Methyl phenol (mg/L)	3+4-Methyl phenol (mg/L)	Naphtha lene (mg/L)	2-Nitro phenol (mg/L)	Phenan threne (mg/L)	Phenol (mg/L)	Pyrene (mg/L)	Pyridine (mg/L)	Benz (a) anthra cene (mg/L)	Benzo (a) pyrene (mg/L)	Benzo (b) fluor anthene (mg/L)	Benzo (g,h,i) perylene (mg/L)	Indeno (1,2,3-cd) pyrene (mg/L)
WQCC 20 NMAC 6.2.3103 (DEC 2018)			NE	NE	NE	NE	NE	NE	NE	NE	NE	NE	NE	NE	NE	NE	**0.03**	NE	NE	**0.005**	NE	NE	NE	**0.0002**	NE	NE	NE
40 CFR 141.61 MCL			NE	NE	NE	**0.006**	NE	NE	NE	NE	NE	NE	NE	NE	NE	NE	NE	NE	NE	NE	NE	NE	NE	0.0002	NE	NE	NE
NMED Tap Water (Rev 2. JUN 2019)			NE	NE	NE	0.0556	NE	**0.0343**	NE	**0.612**	**0.354**	**0.802**	**0.288**	**0.035**	NE	NE	0.00165	NE	**0.17**	5.76	**0.117**	NE	**0.00012**	0.00025	**0.000343**	NE	**0.000343**
EPA RSL for Tap Water (NOV 2019)			**0.13**	**75**	**2**	0.056	NE	0.025	**0.2**	NE	0.36	0.8	0.29	0.036	**0.93**	**0.93**	0.00017	NE	NE	5.8	0.12	**0.02**	0.00003	0.000025	0.0025	NE	0.00025
POND ID	**SAMPLE DATE**	**METHOD**																									
EP-12B	11/21/19	8270D	<0.0005	<0.0005	<0.0025	**0.0272**	<0.0025		<0.0025	<0.0025	<0.0025		<0.0025	<0.0025	0.0937	0.162	<0.0025	0.0056	<0.0025	**0.56**							
	04/29/19	8270C	<0.05	<0.1	<0.05	*<0.05**	<0.05		<0.05	<0.05	<0.05		<0.05	*<0.05**	<0.05	<0.05	*<0.05**	<0.05	<0.05	*<0.05**							
	09/07/18	8270C	<0.05	0.032	<0.05	*<0.05**	<0.05		<0.05	<0.05	<0.05		<0.05	*<0.05**	<0.05	<0.05	*<0.05**	<0.05	<0.05	**0.037**							
	02/22/18	8270C	<0.1	0.11	<0.1	*<0.1**	<0.1		<0.1	<0.1	<0.1	<0.1	<0.1	*<0.1**	0.089	0.18	*<0.1**	<0.1	<0.1	**0.36**							
	10/24/17	8270C	<0.05	0.041	<0.05	*<0.05**	<0.05	*<0.05**	<0.05	<0.05	<0.05	<0.05	<0.05	*<0.05**	<0.05	0.026	<0.01	<0.05	<0.05	*<0.05**	0.026	*<0.05**	*<0.05**	*<0.05**	*<0.05**	<0.05	*<0.05**
	03/30/17	8270C	<0.05	0.044	<0.05	**0.031**	<0.05	*<0.05**	<0.05	<0.05	<0.05	<0.05	<0.05	*<0.05**	<0.05	0.041	<0.01	<0.05	<0.05	**0.045**	<0.05	*<0.05**	*<0.05**	*<0.05**	*<0.05**	<0.05	*<0.05**
	08/30/16	8270C	<0.05	0.031	<0.05	**0.017**	<0.05		0.019	0.021	<0.05		<0.05	*<0.05**	<0.05	<0.05	*<0.05**	<0.05	<0.05	*<0.05**							
	03/02/16	8270C	<0.01	<0.02	<0.01	*<0.01**	<0.01				<0.01		<0.01	<0.01	0.0097	0.053	<0.01	<0.01	<0.01	**0.055**							
	09/01/15	8270C	<0.01	<0.02	<0.01	*<0.01**	<0.01				<0.01		<0.01	<0.01	<0.01	0.034	<0.01	<0.01	<0.01	**0.086**							
	03/25/14	8270C	<0.10	<0.02	<0.01	*<0.01**	<0.01				<0.01		<0.01	<0.01	<0.01	<0.10	<0.01	<0.01	<0.01	**0.21**							
	11/12/14	8270C	<0.01	<0.02	<0.01	**0.012**	<0.01				<0.01		<0.01	<0.01	<0.01	<0.01	<0.01	<0.01	<0.01	*<0.01**							
	03/05/14	8270C	<0.05	<0.1	<0.05	*<0.05**	<0.05				<0.05		<0.05	*<0.05**	<0.05	0.079	*<0.05**	<0.05	<0.05	**0.6**							
	10/15/13	8270C	<0.05	<0.2	<0.05	*<0.05**	<0.05				0.068		<0.05	*<0.05**	0.34	0.73	*<0.05**	<0.05	<0.05	**1.5**							
	05/28/13	8270C	0.11	<0.04	<0.02	*<0.02**	<0.02				0.2		<0.02	<0.02	**1.4**	**3.5**	<0.02	<0.02	<0.02	**5.5**							
	11/06/12	8270C	0.093	<0.1	<0.05	*<0.05**	<0.05				0.089		<0.05	*<0.05**	0.46	**0.96**	*<0.05**	<0.05	<0.05	**1.8**							
	05/29/12	8270C	<0.1	<0.02	<0.1	*<0.1**	<0.1				<0.1		<0.1	*<0.1**	0.33	0.56	*<0.1**	<0.1	<0.1	**1.1**							
	11/01/11	8270C	0.023	<0.02	<0.01	*<0.01**	<0.01				0.021		<0.01	<0.01	0.13	0.19	<0.01	<0.01	<0.01	**0.34**							
	05/23/11	8270C	**0.15**	<0.02	<0.01	*<0.01**	<0.01				0.19		<0.01	<0.01	**1.1**	**2.1**	<0.01	<0.01	<0.01	**2.1**							
	11/16/10	8270C	<0.01	<0.02	<0.01	*<0.01**	<0.01				<0.01		<0.01	<0.01	0.066	0.078	<0.01	<0.01	<0.01	**0.2**							
	04/20/10	8270C	<0.05	<0.1	<0.05	*<0.05**	<0.05				0.11		<0.05	*<0.05**	0.92	**1.2**	*<0.05**	<0.05	<0.05	**2.7**							

DEFINITIONS

NE = Not established

NA = Not analyzed

Bold and highlighted values represent values above the applicable standards

STANDARDS

WQCC 20 NMAC 6.2.3103 - Standards for Ground Water of 10,000 mg/l TDS Concentration or Less.

a) Human Health Standards; b) Other Standards for Domestic Water

40 CFR 141.61 Maximum Contaminant Levels for Organic Contaminants

NMED Risk Assessment Guidance for Investigations and Remediations Table A-1

EPA Regional Screening Level (RSL) Summary Table

NOTES

Ponds marked in red were not sampled because the pond was dry

Items notes with a * and italics have a detection limit greater than or equal to the applicable standard.

			PARAMETERS																	
STANDARDS			4,4´-DDD (mg/L)	4,4´-DDE (mg/L)	4,4´-DDT (mg/L)	Aldrin (mg/L)	alpha-BHC (mg/L)	beta-BHC (mg/L)	Chlordane (mg/L)	delta-BHC (mg/L)	Dieldrin (mg/L)	Endosulfan I (mg/L)	Endosulfan II (mg/L)	Endosulfan sulfate (mg/L)	Endrin (mg/L)	Endrin aldehyde (mg/L)	gamma-BHC (mg/L)	Heptachlor (mg/L)	Heptachlor epoxide (mg/L)	Methoxychlor (mg/L)	Toxaphene (mg/L)
WQCC 20 NMAC 6.2.3103 (DEC 2018)			NE	NE	NE	NE	NE	NE	NE	NE	NE	NE	NE	NE	NE	NE	NE	NE	NE	NE	NE
40 CFR 141.61 MCL			NE	NE	NE	NE	NE	NE	**0.002**	NE	NE	NE	NE	NE	**0.002**	NE	**0.0002**	**0.0004**	**0.0002**	**0.040**	**0.003**
NMED Tap Water (Rev 2. JUN 2019)			**0.003173**	**0.00046**	**0.00229**	**0.000002**	**0.000069**	**0.00024**	0.000448	NE	**0.0000175**	NE	NE	NE	0.00223	NE	0.00042	0.000022	NE	NE	0.000157
EPA RSL for Tap Water (NOV 2018)			0.000032	0.000046	0.00023	0.00000092	0.0000072	0.000025	0.00002	NE	0.0000018	NE	NE	NE	0.0023	NE	0.000042	0.0000014	0.0000014	0.037	0.000071
POND ID	**SAMPLE DATE**	**METHOD**																			
EP-3	11/21/19	8081	<0.0004	<0.0004	<0.0005	*<0.0004**	*<0.0004**	*<0.0004**	*<0.004**	<0.0004	*<0.0004**	<0.0004	<0.0004	<0.0004	<0.0005	<0.0004	*<0.0004**	*<0.0004**	*<0.0004**	<0.0005	*<0.004**
	04/30/19	8081	*<0.005**	*<0.005**	*<0.0062**	*<0.005**	*<0.005**	*<0.005**	*<0.05**	<0.005	*<0.005**	<0.005	<0.005	<0.005	*<0.0062**	<0.005	*<0.005**	*<0.005**	*<0.005**	<0.0062	*<0.05**
	09/07/18	8081	<0.0005	*<0.0005**	<0.0005	*<0.00075**	*<0.00075**	*<0.0005**	*<0.01**	<0.00075	*<0.0005**	<0.0005	<0.0005	<0.00075	<0.0005	<0.00075	*<0.00075**	*<0.00075**	*<0.0005**	<0.0005	*<0.01**
EP-12A	11/21/19	8081	<0.001	*<0.001**	<0.0012	*<0.001**	*<0.001**	*<0.001**	*<0.01**	<0.001	*<0.001**	<0.001	<0.001	<0.0012	<0.001	<0.001	*<0.001**	*<0.001**	*<0.001**	<0.0012	*<0.005**
	09/07/18	8081	<0.0005	*<0.0005**	<0.0005	*<0.00075**	*<0.00075**	*<0.0005**	*<0.01**	<0.00075	*<0.0005**	<0.0005	<0.0005	<0.00075	<0.0005	<0.00075	*<0.00075**	*<0.00075**	*<0.0005**	<0.0005	*<0.01**
EP-12B	11/21/19	8081	<0.00045	<0.00045	<0.00057	*<0.00045**	*<0.00045**	*<0.00045**	*<0.0045**	<0.00045	*<0.00045**	<0.00045	<0.00045	<0.00045	<0.00057	<0.00045	*<0.00045**	*<0.00045**	*<0.00045**	<0.00057	*<0.0045**
	04/29/19	8081	*<0.005**	*<0.005**	*<0.0062**	*<0.005**	*<0.005**	*<0.005**	*<0.05**	<0.005	*<0.005**	<0.005	<0.005	<0.005	*<0.0062**	<0.005	*<0.005**	*<0.005**	*<0.005**	<0.0062	*<0.05**
	09/07/18	8081	<0.0005	*<0.0005**	<0.0005	*<0.00075**	*<0.00075**	*<0.0005**	*<0.01**	<0.00075	*<0.0005**	<0.0005	<0.0005	<0.00075	<0.0005	<0.00075	*<0.00075**	*<0.00075**	*<0.0005**	<0.0005	*<0.01**

DEFINITIONS
NE = Not established
NA = Not analyzed
Bold and highlighted values represent values above the applicable standards
STANDARDS
WQCC 20 NMAC 6.2.3103 - Standards for Ground Water of 10,000 mg/l TDS Concentration or Less.
a) Human Health Standards; b) Other Standards for Domestic Water
40 CFR 141.61 Maximum Contaminant Levels for Organic Contaminants
NMED Risk Assessment Guidance for Investigations and Remediations Table A-1
EPA Regional Screening Level (RSL) Summary Table
NOTES
Items notes with a * and italics have a detection limit greater than or equal to the applicable standard.

8.16 STP-1 TO EP-2 (EP-2 INLET)

BTEX, MTBE, DRO/GRO/MRO and TDS Analytical Result Summary

STANDARDS			PARAMETERS									
			Benzene (mg/L)	Toluene (mg/L)	Ethylbenzene (mg/L)	Total Xylenes (mg/L)	MTBE (mg/L)	DRO (mg/L)	GRO (mg/L)	MRO (mg/L)	TDS (mg/L)	TSS[3] (mg/L)
WQCC 20NMAC 6.2.3103 (DECEMBER 2018)			**0.005**	**1**	**0.7**	**0.62**	**0.1**	NE	NE	NE	**1000**	NE
40 CFR 141.61 MCL			0.005	1	0.7	10	NE	NE	NE	NE	NE	NE
NMED TAP WATER (Rev 2. JUNE 2019)			0.00455	1.09	0.0149	0.193	0.143	NE	NE	NE	NE	NE
EPA RSL TAP WATER (NOVEMBER 2019)			0.0046	1.1	0.0015	0.19	0.14	NE	NE	NE	NE	NE
NMED SSG (JUNE 2019)			NE	NE	NE	NE	NE	**0.0167**	**0.0101**	**0.0858**	NE	NE
SAMPLE ID	**DATE SAMPLED**	**METHOD**										
STP-1 TO EP-2	11/21/19	8260B/8015D/2540C/2540D	**0.022**	0.013	<0.01	<0.015	<0.01	*<0.4**	*<0.5**	*<2.5**	**3140**	69
(EP-2 Inlet)	08/22/19	--	Not sampled.									
	05/29/19	8260B/8015D/2540C/2540D	*<0.02**	<0.02	<0.02	<0.03	<0.02	**2.1**	*<1.0**	*<5.0**	**4350**	36
	02/07/19	8260B/8015D/2540C	**0.015**	0.0089	0.00028	0.0017	<0.001	**1.2**	**0.072**	*<5.0**	**3550**	
	11/08/18	8260B/8015D/2540C	0.0013	0.0011	<0.005	<0.0075	<0.005	**14**	**0.14**	**5.4**	**3220**	
	08/31/18	8260B/8015D/2540C	*<0.01**	<0.01	<0.01	<0.015	<0.01	**2.7**	**0.29**	*<5.0**	**2730**	
	05/06/18	8260B/8015D/2540C	0.0026	0.0018	<0.01	0.0058	<0.01	**10**	**0.51**	**8.7**	**3630**	
	02/12/18	8260B/8015D/2540C	*<0.01**	0.0023	0.0013	0.0071	<0.01	**61**	**115**	**32**	**2380**	
	12/12/17	8260B/8015D/2540C	**0.0071**	0.002	<0.01	<0.015	<0.01	**3.8**	**0.24**	*<5.0**	**2550**	
	09/07/17	8260B/8015D/2540C	0.0026	0.0014	<0.01	<0.015	<0.01	**30**	*<0.25**	*<5.0**	**3520**	
	06/02/17	8260B/8015D/2540C	0.00071	<0.01	<0.01	<0.015	<0.01	**1.5**	*<0.25**	*<5.0**	**3680**	
	03/30/17	8260B/8015D/2540C	0.0019	0.0022	<0.005	0.0035	<0.005	**11**	**1.2**	*<5.0**	**3760**	
	11/17/16	8260B/8015D/2540C	*<0.01**	<0.01	<0.01	<0.015	<0.01	**0.95**	*<0.5**	*<5.0**	**4810**	
	08/30/16	8260B/8015D/2540C	*<0.01**	<0.01	<0.01	<0.015	<0.01	**5.1**	**0.22**	*<5.0**	**5100**	
	06/08/16 [2]	8260B/8015D/2540C	*<0.005**	<0.005	<0.005	<0.0075	<0.005	**2**	*<0.25**	*<5.0**	**4400**	
	08/24/15	8260B/8015D/2540C	<0.002	<0.002	<0.002	<0.003	<0.002	**2.3**	**0.13**	*<5.0**	**2420**	
	09/10/14	8260B/8015D/2540C	**0.018**	<0.002	<0.002	<0.003	<0.002	**2.4**	*<0.5**	*<5.0**	**2590**	
	09/05/13	8260B/8015D/2540C	**0.033**	0.013	<0.01	<0.015	<0.01	**3.3**	*<0.5**	*<5.0**	**2340**	
	08/21/12 [1]	8260B/8015D/2540C	<0.001	<0.001	<0.001	<0.0015	<0.001	*<1.0**	*<0.05**	*<5.0**	**3720**	
	10/31/11	8260B/8015D/2540C	*<0.005**	0.0063	<0.005	<0.0075	<0.005	**39**	**1.7**	**6.9**	**6730**	
	07/21/10	8260B/8015D/2540C	*<0.005**	<0.005	<0.005	<0.0075	<0.005	**21**	**0.83**		**4120**	

DEFINITIONS

NA = Not analyzed

Bold and highlighted values represent values above the applicable standards

STANDARDS

WQCC 20 NMAC 6.2.3103 - Standards for Ground Water of 10,000 mg/l TDS Concentration or Less.

a) Human Health Standards; b) Other Standards for Domestic Water

40 CFR 141.61 Maximum Contaminant Levels for Organic Contaminants

NMED Risk Assessment Guidance for Investigations and Remediations Table A-1

EPA Regional Screening Level (RSL) Summary Table

NMED Soil Screening Guidance Volume 1, Table 6-4 (groundwater)

NOTES

Not sampled

Items notes with a * and italics have a detection limit greater than or equal to the applicable standard.

1) Sample taken from inlet from STP-1. No flow to aeration lagoons - diverted to Waste Water Treatment Plant.

2) Switched to quarterly per NMED directive "Approval with Modifications", dated May 18, 2016.

8.16.1 STP-1 TO EP-2 (EP-2 INLET)

BOD/COD Analytical Result Summary

			PARAMETERS	
			BOD (mg/L)	COD (mg/L)
STANDARDS				
WQCC 20 NMAC 6.2.3103 (DEC 2018)			<30	<125
SAMPLE ID	DATE SAMPLED	METHOD		
STP-1 TO EP-2	11/21/19	SM5210B/410.4	**1600**	**2420**
(EP-2 Inlet)	08/22/19	--	Not sampled.	
	05/29/19	SM5210B/410.4	**1100**	**1590**
	02/07/19	SM5210B/410.4	**150**	**495**
	11/08/18	SM5210B/5220C	**>2697.6**	**8080**
	08/31/18	SM5210B/5220C	**1500**	**1890**
	05/06/18	SM5210B/5220C	**770**	**1300**
	02/12/18	SM5210B/5220C	**780**	**1360**
	12/12/17	SM5210B/5220C	**1400**	**2100**
	09/07/17	SM5210B/5220C	**640**	**1100**
	06/02/17	SM5210B/5220C	**1200**	**1400**
	03/30/17	SM5210B/5220C	**470**	**1300**
	11/17/16	SM5210B/5220C	**1000**	**1620**
	08/30/16	SM5210B/5220C	**310**	**661**
	06/08/16	SM5210B/5220C	**160**	**408**
	08/24/15	SM5210B/5220C	**380**	**80.6**
	11/12/14	SM5210B/5220C	**630**	**1300**
	09/10/14	SM5210B/5220C	**270**	**1500**
	09/05/13	SM5210B/5220C	**670**	**1200**
	08/21/12 [1]	SM5210B/5220C	<2.0	<10.0
	10/31/11	SM5210B/5220C	**410**	**1520**
	07/21/10	SM5210B/5220C	**1400**	**3200**
	06/18/09	SM5210B/5220C	**191**	**1149**
	08/22/08	SM5210B/5220C	**348**	**1540**
	03/26/08	SM5210B/5220C	**649**	**1430**
	03/20/08	SM5210B/5220C	**344**	**829**
	03/11/08	SM5210B/5220C	**651**	**1150**
	03/06/08	SM5210B/5220C	**947**	**1520**
	02/28/08	SM5210B/5220C	**46.1**	**2440**
	02/21/08	SM5210B/5220C	**>394**	**1950**
	02/14/08	SM5210B/5220C	**570**	**2290**
	02/07/08	SM5210B/5220C	**671**	**2570**
	01/31/08	SM5210B/5220C	**414**	**1290**
	01/25/08	SM5210B/5220C	**520**	**1200**
	01/18/08	SM5210B/5220C	**462**	**1460**
	01/11/08	SM5210B/5220C	**449**	**1350**

DEFINITIONS

Bold and highlighted values represent values above the applicable standards

STANDARDS

WQCC 20 NMAC 6.2.3103 - Standards for Ground Water of 10,000 mg/l TDS Concentration or Less.

a) Human Health Standards; b) Other Standards for Domestic Water

NOTES

Not sampled

1) Sample taken from inlet from STP-1. No flow to aeration lagoons - diverted to Waste Water Treatment Plant.

Released to Imaging: 11/23/2022 9:27:32 AM

Received by OCD: 12/16/2021 8:08:27 AM

8.16.2 STP-1 TO EP-2 (EP-2 INLET)

Volatile Organic Compounds Analytical Result Summary

STANDARDS			PARAMETERS									
			1,2,4-Trimethyl benzene (mg/L)	1,3,5-Trimethyl benzene (mg/L)	Naphthalene (mg/L)	1-Methyl naphthalene (mg/L)	2-Methyl naphthalene (mg/L)	Acetone (mg/L)	Bromomethane (mg/L)	2-Butanone (mg/L)	Carbon Disulfide (mg/L)	Methylene Chloride (mg/L)
WQCC 20 NMAC 6.2.3103 (DEC 2018)			NE	NE	**0.03**	NE	NE	NE	NE	NE	NE	**0.005**
40 CFR 141.61 MCL			NE	NE	NE	NE	NE	NE	NE	NE	NE	0.005
NMED TAP WATER (Rev 2. JUNE 2019)			NE	NE	0.00165	**0.0114**	**0.035**	**14.06**	**0.00754**	**5.56**	**0.81**	0.1180
EPA RSL TAP WATER (NOVEMBER 2019)			**0.056**	**0.06**	0.00017	0.0011	0.036	14	0.0075	5.6	0.81	0.011
SAMPLE ID	**DATE SAMPLED**	**METHOD**										
STP-1 TO EP-2	11/21/19	8260B	<0.01	<0.01	<0.02	*<0.04**	*<0.04**	<0.1	**0.016**	0.047	<0.1	*<0.03**
(EP-2 Inlet)	08/22/19	--	Not sampled.									
	05/29/19	8260B	<0.02	<0.02	*<0.04**	*<0.08**	*<0.08**	0.76	*<0.06**	0.046	<0.2	*<0.06**
	02/07/19	8260B	<0.001	<0.001	<0.002	<0.004	<0.004	0.53	<0.003	0.016	0.0012	<0.003
	11/08/18	8260B	<0.005	<0.005	<0.01	<0.002	<0.002	<0.05	0.0019	0.92	<0.05	*<0.015**
	08/31/18	8260B	<0.01	<0.01	<0.02	*<0.04**	*<0.04**	1.2	*<0.03**	0.17	<0.1	*<0.03**
	05/06/18	8260B	0.0031	<0.01	<0.02	0.0053	0.0057	1.4	*<0.03**	<0.1	<0.1	*<0.03**
	02/12/18	8260B	0.0029	0.0013	0.0062	**0.028**	0.025	1.1	*<0.03**	<0.1	<0.1	*<0.03**
	12/12/17	8260B		<0.01	<0.02	*<0.04**		1.6		0.054	<0.1	*<0.03**
	09/07/17	8260B/8270C		<0.01	<0.02	*<0.04**		1.1		<0.1	<0.1	*<0.03**
	06/02/17	8260B		<0.01	0.0018	0.0057		1.6		0.14	0.012	0.0019
	03/30/17	8260B		<0.01				1.2		0.058	0.02	
	11/17/16	8260B		<0.01				2.4		0.076	0.013	
	08/30/16	8260B/8270C		<0.01				1.1		<0.1	<0.1	
	06/08/16 [1]	8260B		<0.005				0.87		0.024	0.039	
	08/24/15	8260B		<0.01				0.25		<0.02	<0.02	
	09/10/14	8260B/8270C		0.022				1.3		0.16	0.058	
	09/05/13	8260B						2.2		0.26	<0.1	
	08/21/12 [1]	8260B						<0.01		<0.01	<0.01	
	10/31/11	8260B						0.86		0.14	<0.05	
	07/21/10	8260B						0.49		<0.05	<0.05	

DEFINITIONS

NA = Not analyzed NE = Not established

Bold and highlighted values represent values above the applicable standards

STANDARDS

WQCC 20 NMAC 6.2.3103 - Standards for Ground Water of 10,000 mg/l TDS Concentration or Less.

a) Human Health Standards; b) Other Standards for Domestic Water

40 CFR 141.61 Maximum Contaminant Levels for Organic Contaminants

NMED Risk Assessment Guidance for Investigations and Remediations Table A-1

EPA Regional Screening Level (RSL) Summary Table

NOTES

Not sampled

Items notes with a * and italics have a detection limit greater than or equal to the applicable standard.

1) Sample taken from inlet from STP-1. No flow to aeration lagoons - diverted to Waste Water Treatment Plant.

Total Metals Analytical Result Summary

STANDARDS			PARAMETERS											
			Arsenic (mg/L)	Barium (mg/L)	Cadmium (mg/L)	Chromium (mg/L)	Copper (mg/L)	Iron (mg/L)	Lead (mg/L)	Manganese (mg/L)	Selenium (mg/L)	Mercury (ug/L)	Uranium (mg/L)	Zinc (mg/L)
WQCC 20 NMAC 6.2.3103 (DEC 2018)			**0.01**	**2**	**0.005**	**0.05**	**1.0**	**1.0**	**0.015**	**0.2**	**0.05**	**2**	**0.03**	**10.0**
40 CFR 141.62 MCL			0.01	2.0	0.005	0.1	1.3	NE	0.015	NE	0.05	2	0.03	NE
NMED TAP WATER (Rev 2. JUNE 2019)			0.000855	3.28	0.00624	0.0057	0.7898	13.8	NE	2.02	0.0987	0.626	0.0592	5.96
EPA RSL TAP WATER (NOVEMBER 2019)			0.000052	3.8	0.0092	22	0.8	14	0.015	0.43	0.1	0.63	0.004	6
SAMPLE ID	**DATE SAMPLED**	**METHOD**												
STP-1 TO EP-2	11/21/19	200.7/200.8	0.009	0.15	<0.002	0.0097	0.011	**3**	<0.0025	0.15	0.003	<0.2	0.0017	0.039
(EP-2 Inlet)	08/22/19	--	Not sampled.											
	05/29/19	200.7/200.8	0.0082	0.26	*<0.01**	<0.03	<0.03	**1.9**	<0.0025	**0.23**	0.0055	<0.2	0.00065	<0.05
	02/07/19	200.7/200.8	0.0055	0.28	<0.002	0.0021	0.013	0.76	<0.005	**0.23**	0.0095	0.14	0.0057	0.018
	11/08/18	200.7/200.8	**0.015**	0.18	<0.002	0.0056	0.0074	**1.1**	0.0012	**0.21**	0.0097	0.49	0.0056	0.051
	08/31/18	200.7/200.8	0.0087	0.18	<0.002	0.0025	0.012	0.36	0.0003	**0.4**	0.0084	0.095	0.0003	0.026
	11/12/14	200.7/200.8	**0.011**	0.071	<0.002	0.013	0.0066	**1.6**	<0.001	0.18	<0.025	<0.2	0.0022	0.044
	09/10/14	200.7/200.8	**0.014**	0.098	<0.002	0.017	<0.006	**3.7**	<0.001	0.18	0.021	<0.2	0.0045	0.12

DEFINITIONS

NA = Not analyzed NE = Not established

Bold and highlighted values represent values above the applicable standards

STANDARDS

WQCC 20 NMAC 6.2.3103 - Standards for Ground Water of 10,000 mg/l TDS Concentration or Less.

a) Human Health Standards; b) Other Standards for Domestic Water

40 CFR 141.62 Maximum Contaminant Levels for Inorganic Contaminants

NMED Risk Assessment Guidance for Investigations and Remediations Table A-1

EPA Regional Screening Level (RSL) Summary Table

NOTES

Not sampled

Items notes with a * and italics have a detection limit greater than or equal to the applicable standard.

1) Method 200.7/200.8 analysis requested as part of the annual sampling

Dissolved Metals Aanalytical Result Summary

STANDARDS			PARAMETERS										
			Arsenic (mg/L)	Barium (mg/L)	Cadmium (mg/L)	Chromium (mg/L)	Copper (mg/L)	Iron (mg/L)	Lead (mg/L)	Manganese (mg/L)	Selenium (mg/L)	Uranium (mg/L)	Zinc (mg/L)
WQCC 20 NMAC 6.2.3103 (DEC 2018)			**0.01**	**2**	**0.005**	**0.05**	**1.0**	**1.0**	**0.015**	**0.2**	**0.05**	**0.03**	**10.0**
40 CFR 141.62 MCL			0.01	2	0.005	0.1	1.3	NE	0.015	NE	0.05	0.03	NE
NMED TAP WATER (Rev 2. JUNE 2019)			0.000513	3.28	0.00624	0.0057	0.7898	13.8	NE	2.02	0.0987	0.0592	5.96
EPA RSL TAP WATER (NOVEMBER 2019)			0.000052	3.8	0.0092	22	0.8	14	0.015	0.43	0.1	0.004	6
SAMPLE ID	**DATE SAMPLED**	**METHOD**											
STP-1 TO EP-2	11/21/19	200.7/200.8	0.007	0.14	<0.002	0.0084	0.0047	**2.8**	<0.0025	0.15	0.0051	0.00069	0.049
(EP-2 Inlet)	08/22/19	--	Not sampled.										
	05/29/19	200.7/200.8	0.0069	0.25	<0.01	<0.03	<0.03	**1.8**	<0.005	**0.22**	0.0084	0.00042	0.033
	02/07/19	200.7/200.8	0.0074	0.26	<0.01	<0.03	<0.03	0.59	<0.005	0.2	0.011	0.0055	0.025
	11/08/18	200.7/200.8	**0.012**	0.13	<0.002	0.0042	<0.006	0.49	<0.0025	0.2	0.013	0.004	0.04
	08/31/18	200.7/200.8	0.0075	0.15	<0.002	0.0023	<0.006	0.17	<0.0025	**0.36**	0.014	<0.0025	0.017
	09/10/14	200.7/200.8	**0.011**	0.087	<0.002	0.018	<0.006	**3.5**	<0.001	0.18	0.022	0.0028	0.087

DEFINITIONS

NA = Not analyzed NE = Not established

Bold and highlighted values represent values above the applicable standards

STANDARDS

WQCC 20 NMAC 6.2.3103 - Standards for Ground Water of 10,000 mg/l TDS Concentration or Less.

a) Human Health Standards; b) Other Standards for Domestic Water

40 CFR 141.62 Maximum Contaminant Levels for Inorganic Contaminants

NMED Risk Assessment Guidance for Investigations and Remediations Table A-1

EPA Regional Screening Level (RSL) Summary Table

Not sampled

8.17 MKTF WELLS
BTEX and MTBE Analytical Results

STANDARDS			PARAMETERS				
			Benzene (mg/L)	Toluene (mg/L)	Ethylbenzene (mg/L)	Total Xylenes (mg/L)	MTBE (mg/L)
WQCC 20 NMAC 6.2.3103 (DEC 2018)			**0.005**	**1**	**0.7**	**0.62**	**0.1**
40 CFR 141.61 MCL			0.005	1	0.7	10	NE
NMED Tap Water (JUNE 2019)			0.00455	1.09	0.0149	0.193	0.143
EPA RSL for Tap Water (NOVEMBER 2019)			0.0046	1.1	0.0015	0.19	0.14
WELL ID	**DATE SAMPLED**	**METHOD**					
MKTF-1	Second half 2016-2019	--	SPH Detected - No samples were collected.				
	02/24/16	8260B	**9.5**	**1.8**	**0.85**	**1**	**0.33**
	11/04/15	8260B	**10**	**1.4**	**0.79**	**1.2**	**0.39**
	08/21/15	8260B	**9.1**	1	0.7	**0.87**	**0.44**
	06/09/15	8260B	**9.3**	**1.5**	**0.74**	**1.8**	**0.41**
	03/11/15	8260B	**9.3**	**2**	**0.74**	**1.9**	**0.37**
	06/06/14	8260B	**8.7**	**7.1**	**0.92**	**4.3**	**0.42**
MKTF-2	11/19/19	8260B	**0.36**	0.003	0.046	<0.0075	0.023
	08/23/19	8260B	**0.99**	0.012	0.078	<0.03	0.051
	05/06/19	8260B	**0.95**	0.019	0.043	0.11	0.049
	03/28/19	8260B	**0.62**	0.016	0.01	0.13	0.047
	11/28/18	8260B	**5.5**	0.082	0.51	0.17	0.099
	08/20/18	8260B	**2.5**	0.031	0.14	0.031	0.1
	05/01/18	8260B	**2.9**	0.039	0.24	0.12	0.097
	02/06/18	8260B	**2.6**	0.049	0.25	0.089	**0.11**
	11/20/17	8260B	**2.9**	0.05	0.28	0.069	**0.13**
	10/03/17	8260B	**2.7**	0.028	0.15	0.037	**0.13**
	03/16/17	8260B	**4**	0.056	0.51	0.23	**0.15**
	10/28/16	8260B	**1.6**	0.02	0.095	0.0099	**0.15**
	09/07/16	8260B	**1.8**	0.017	0.16	0.028	**0.11**
	06/10/16	8260B	**1.2**	0.026	0.21	0.16	0.087
	02/24/16	8260B	**0.11**	0.00095	0.0011	<0.0075	0.036
	11/04/15	8260B	**0.44**	0.013	0.072	0.0063	0.058
	08/21/15	8260B	**0.37**	0.0056	0.011	0.0033	0.044
	06/09/15	8260B	**0.47**	0.011	0.062	0.039	0.037
	03/11/15	8260B	**0.2**	<0.002	0.0041	0.0076	0.044
	11/14/14	8260B	**0.2**	0.0022	0.0029	0.0016	0.059
	09/18/14	8260B	**2.1**	0.044	0.34	<0.0075	0.1
	06/06/14	8260B	**0.23**	0.0036	0.022	0.034	0.042
	04/08/14	8260B	**0.11**	<0.002	0.0035	0.008	0.036
	10/28/13	8021B	**0.69**	<0.02	0.055	0.16	<0.05
MKTF-3			SPH Detected - No samples were collected.				

8.17 MKTF WELLS
BTEX and MTBE Analytical Results

STANDARDS			PARAMETERS				
			Benzene (mg/L)	Toluene (mg/L)	Ethylbenzene (mg/L)	Total Xylenes (mg/L)	MTBE (mg/L)
WQCC 20 NMAC 6.2.3103 (DEC 2018)			**0.005**	**1**	**0.7**	**0.62**	**0.1**
40 CFR 141.61 MCL			0.005	1	0.7	10	NE
NMED Tap Water (JUNE 2019)			0.00455	1.09	0.0149	0.193	0.143
EPA RSL for Tap Water (NOVEMBER 2019)			0.0046	1.1	0.0015	0.19	0.14
WELL ID	**DATE SAMPLED**	**METHOD**					
MKTF-4	10/30/19	8260B	**0.93**	0.012	**0.71**	**0.74**	**1.8**
	08/21/19	8260B	**0.53**	0.0091	0.42	0.44	**1.6**
	05/13/19	8260B	**0.77**	0.013	0.62	**0.73**	**1.7**
	03/26/19	8260B	**0.78**	0.014	0.62	**0.74**	**1.6**
	11/20/18	8260B	**1.1**	0.011	0.61	**0.65**	**2.2**
	09/04/18	8260B	**1.1**	0.014	0.7	**0.86**	**1.8**
	05/02/18	8260B	**1.1**	0.016	**0.74**	**0.89**	**2.3**
	02/14/18	8260B	**0.9**	0.014	0.6	**0.71**	**2**
	11/28/17	8260B	**1.2**	0.019	**0.82**	**1.1**	**2.3**
	09/26/17	8260B	**1.1**	0.019	**0.82**	**1.1**	**2.3**
	06/08/17	8260B	**0.92**	0.016	0.59	**0.89**	**2**
	03/02/17	8260B	**0.98**	0.015	0.68	**0.88**	**2.5**
	11/02/16	8260B	**0.88**	0.018	0.64	**0.85**	**2.1**
	09/11/16	8260B	**0.88**	0.015	0.67	**0.76**	**2.4**
	06/09/16	8260B	**0.63**	0.015	0.58	**0.72**	**1.8**
	02/29/16	8260B	**0.8**	0.017	**0.73**	**0.8**	**2.2**
	11/03/15	8260B	**0.38**	0.015	0.7	**0.78**	**1.5**
	08/18/15	8260B	**0.32**	0.011	0.43	0.55	**1.4**
	06/04/15	8260B	**0.31**	0.013	0.45	0.56	**1.3**
	03/16/15	8260B	**0.22**	<0.01	0.26	0.34	**1.2**
	11/13/14	8260B	**0.18**	<0.01	0.28	0.26	**1.4**
	09/15/14	8260B	**0.15**	<0.005	0.14	0.14	**1.4**
	06/04/14	8260B	**0.67**	0.019	0.57	**0.68**	**1.8**
	04/11/14	8260B	**1**	0.025	**0.8**	**1**	**2.4**
MKTF-5			SPH Detected - No samples were collected.				
MKTF-6			SPH Detected - No samples were collected.				
MKTF-7			SPH Detected - No samples were collected.				
MKTF-8			SPH Detected - No samples were collected.				

8.17 MKTF WELLS
BTEX and MTBE Analytical Results

STANDARDS			PARAMETERS				
			Benzene (mg/L)	Toluene (mg/L)	Ethylbenzene (mg/L)	Total Xylenes (mg/L)	MTBE (mg/L)
WQCC 20 NMAC 6.2.3103 (DEC 2018)			0.005	1	0.7	0.62	0.1
40 CFR 141.61 MCL			0.005	1	0.7	10	NE
NMED Tap Water (JUNE 2019)			0.00455	1.09	0.0149	0.193	0.143
EPA RSL for Tap Water (NOVEMBER 2019)			0.0046	1.1	0.0015	0.19	0.14
WELL ID	DATE SAMPLED	METHOD					
MKTF-9	11/18/19	8260B	3.7	0.014	0.23	0.069	0.45
	08/28/19	8260B	3.5	0.021	0.27	0.098	0.42
	05/13/19	8260B	3.2	0.025	0.28	0.095	0.31
	03/26/19	8260B	2.2	0.019	0.22	0.098	0.24
	11/28/18	8260B	3.3	0.02	0.19	0.073	0.56
	09/04/18	8260B	2.7	0.019	0.25	0.084	0.43
	05/02/18	8260B	2.8	0.025	0.28	0.098	0.49
	02/14/18	8206B	2.7	0.024	0.25	0.084	0.48
	11/28/17	8260B	3.2	0.027	0.26	0.086	0.51
	09/28/17	8260B	3	0.03	0.3	0.097	0.53
	06/12/17	8260B	3	0.032	0.3	0.086	0.68
	03/15/17	8260B	2.4	0.032	0.3	0.083	0.61
	11/02/16	8260B	1.6	0.026	0.21	0.052	0.5
	09/11/16	8260B	2	0.03	0.22	0.059	0.62
	06/09/16	8260B	1.4	0.029	0.21	0.056	0.53
	02/29/16	8260B	1.6	0.029	0.24	0.064	0.69
	11/03/15	8260B	1.5	0.036	0.23	0.07	0.63
	08/18/15	8260B	1.2	0.035	0.2	0.063	0.6
	06/04/15	8260B	0.89	0.025	0.15	0.039	0.43
	03/16/15	8260B	0.49	0.013	0.08	0.018	0.5
	11/14/14	8260B	0.81	0.033	0.15	0.11	0.77
	09/18/14	8260B	0.75	0.027	0.096	0.043	0.76
	06/05/14	8260B	1.3	0.052	0.2	0.098	1.2
	04/14/14	8260B	1.1	0.038	0.14	0.075	1.2
MKTF-10	10/30/19	8260B	5.5	0.57	1.7	7.2	0.017
	08/22/19	8260B	4.6	0.66	1.6	7.4	0.019
	05/13/19	8260B	5.5	0.9	1.7	7.9	0.024
	03/26/19	8260B	5	0.86	1.7	7.9	0.047
	11/20/18	8260B	11	1.9	1.9	8	0.01
	09/04/18	8260B	10	2.4	1.8	8.1	<0.05
	05/02/18	8260B	13	4.9	2.1	9.6	0.03
	02/14/18	8260B	10	3.7	1.8	8.3	0.014
	11/28/17	8260B	9.8	4.7	1.8	8.3	0.035
	09/28/17	8260B	9.5	8.8	1.8	8.7	*<0.1**
	06/08/17	8260b	12	20	1.8	8.2	*<0.1**
	03/02/17	8260B	18	21	1.6	7.8	0.028
	11/02/16	8260B	17	22	1.7	8	*<0.1**
	09/11/16	8260b	16	20	1.6	7.3	*<0.1**
	06/09/16	8260B	15	22	1.7	8.9	0.018
	02/29/16	8260B	11	23	1.7	7.7	*<0.1**
	11/03/15	8260B	12	22	1.6	6.8	<0.05
	08/18/15	8260B	9.2	19	1.5	6.5	*<0.5**
	06/04/15	8260B	10	20	1.5	6.5	<0.05
	03/16/15	8260B	11	21	1.6	6.8	<0.05
	11/14/14	8260B	11	20	1.7	7.6	<0.02
	09/18/14	8260B	11	15	0.93	4	<0.05
	06/06/14	8260B	12	14	0.74	3.4	0.019
	04/11/14	8260B	14	19	1.5	6.9	<0.05

8.17 MKTF WELLS
BTEX and MTBE Analytical Results

STANDARDS			PARAMETERS				
			Benzene (mg/L)	Toluene (mg/L)	Ethylbenzene (mg/L)	Total Xylenes (mg/L)	MTBE (mg/L)
WQCC 20 NMAC 6.2.3103 (DEC 2018)			0.005	1	0.7	0.62	0.1
40 CFR 141.61 MCL			0.005	1	0.7	10	NE
NMED Tap Water (JUNE 2019)			0.00455	1.09	0.0149	0.193	0.143
EPA RSL for Tap Water (NOVEMBER 2019)			0.0046	1.1	0.0015	0.19	0.14
WELL ID	DATE SAMPLED	METHOD					
MKTF-11	10/30/19	8260B	13	1.5	0.85	2.2	0.041
	08/21/19	8260B	9.1	1.4	0.67	1.7	0.028
	05/13/19	8260B	6.1	3.4	0.57	1.8	0.046
	03/26/19	8260B	5.7	5	0.65	2.3	0.067
	11/20/18	8260B	11	4.7	0.47	2.5	0.071
	09/04/18	8260B	10	5.7	0.81	2.5	0.064
	05/02/18	8260B	13	12	1.2	3.8	0.5
	02/08/18	8260B	13	12	1	3.1	0.059
	11/28/17	8260B	9.9	8.8	0.84	2.6	0.068
	09/26/17	8260B	10	10	0.81	2.8	0.054
	06/08/17	8260B	4.5	4.7	0.47	1.5	0.05
	03/02/17	8260B	3.9	3.4	0.59	1.6	0.065
	11/02/16	8260B	3.9	4.5	0.52	1.6	0.071
	09/11/16	8260B	4.5	4.8	0.53	1.6	0.081
	06/09/16	8260B	4.5	5.8	0.57	1.8	0.078
	02/29/16	8260B	5.1	6.4	0.67	2.2	0.12
	11/03/15	8260B	11	13	0.96	3.9	0.056
	08/18/15	8260B	3.7	4.2	0.5	1.5	0.082
	06/04/15	8260B	12	13	1.2	4.9	0.041
	03/16/15	8260B	10	11	0.93	3.7	0.048
	11/13/14	8260B	9.5	8.2	0.77	2.3	0.08
	09/15/14	8260B	9.5	7.1	0.72	2	0.083
	06/05/14	8260B	12	7.8	0.75	2.2	0.096
	04/11/14	8260B	15	7.6	0.93	2.2	0.15
MKTF-12			SPH Detected - No samples were collected.				
MKTF-13	10/29/19	8260B	4.7	0.11	0.6	2.6	0.33
	08/20/19	--	SPH Detected - No samples were collected.				
	05/09/19	8260B	3.2	0.12	0.32	2.6	0.48
	03/26/19	8260B	3.5	0.14	0.6	3.5	0.44
	11/28/18	8260B	4.5	0.13	0.53	2.8	1.4
	08/30/18	8260B	3.5	0.12	0.65	3.2	1.2
	05/10/18	8260B	4.8	0.15	0.87	4	2
	03/15/17	8260B	3	0.21	0.87	4	2.3
MKTF-14			SPH Detected - No samples were collected.				

8.17 MKTF WELLS
BTEX and MTBE Analytical Results

STANDARDS			PARAMETERS				
			Benzene (mg/L)	Toluene (mg/L)	Ethylbenzene (mg/L)	Total Xylenes (mg/L)	MTBE (mg/L)
WQCC 20 NMAC 6.2.3103 (DEC 2018)			0.005	1	0.7	0.62	0.1
40 CFR 141.61 MCL			0.005	1	0.7	10	NE
NMED Tap Water (JUNE 2019)			0.00455	1.09	0.0149	0.193	0.143
EPA RSL for Tap Water (NOVEMBER 2019)			0.0046	1.1	0.0015	0.19	0.14
WELL ID	DATE SAMPLED	METHOD					
MKTF-15	10/30/19	--	SPH Detected - No samples were collected.				
	08/21/19	--	SPH Detected - No samples were collected.				
	05/13/19	8260B	18	4.9	1.8	5.8	0.068
	03/25/19	--	SPH Detected - No samples were collected.				
	11/19/18	--	SPH Detected - No samples were collected.				
	08/28/18	8260B	17	4.6	1.8	5.8	0.14
	05/02/18	8260B	16	11	2.4	7.9	0.18
	02/08/18	--	SPH Detected - No samples were collected.				
	11/28/17	8260B	18	15	2.2	7.7	0.16
	09/26/17	--	SPH Detected - No samples were collected.				
	06/08/17	8260B	23	22	2.6	8.7	0.13
	03/02/17	8260B	24	17	2.1	7.7	0.16
	11/02/16	8260B	20	16	2.1	7.6	0.099
	09/11/16	8260B	24	16	2	7.3	0.096
	06/09/16	--	SPH Detected - No samples were collected.				
	03/16/16	--	SPH Detected - No samples were collected.				
	1Q & 2Q 2015	--	SPH Detected - No samples were collected.				
	11/14/14	--	SPH Detected - No samples were collected.				
	09/17/14	8260B	11	7	1.4	4.3	0.38
	06/05/14	8260B	12	8.8	1.3	3.7	0.27
	04/10/14	8260B	16	2.4	1.2	6.1	0.27
	11/01/13	8021B	12	12	1.5	4.8	NA
MKTF-16	10/30/19	8260B	15	0.095	1.5	0.43	0.62
	08/22/19	8260B	9.8	0.043	0.48	0.11	0.55
	05/14/19	8260B	14	0.11	0.71	0.62	0.62
	02/20/19	8260B	21	0.19	1.4	1.6	0.61
	11/29/18	8260B	17	0.12	0.89	0.72	0.69
	08/31/18	8260B	17	0.13	1.3	1.4	0.64
	05/11/18	8260B	19	0.17	1.6	2	0.64
	02/15/18	8260B	1.8	0.024	0.015	0.23	0.04
	11/29/17	8260B	21	0.21	1.4	3.2	0.8
	09/26/17	8260B	23	0.24	1.6	3.9	0.92
	06/08/17	8260B	19	0.22	0.71	2.8	0.82
	03/14/17	8260B	22	0.34	1.7	4.9	0.72
	11/03/16	8260B	19	0.22	0.88	3.4	0.97
	09/12/16	8260B	23	0.24	1.3	4.3	1.7
	06/09/16	8260B	16	0.34	1.1	3.6	1.4
	02/29/16	8260B	19	0.28	1	3.9	1.4
	11/03/15	8260B	28	0.62	1.7	6.6	1.7
	08/23/15	8260B	24	0.64	1.4	5.6	2.1
	06/08/15	8260B	23	1.3	1.4	5.3	2
	03/16/15	8260B	19	0.45	1.4	5.4	1.6
	11/18/14	8260B	20	1.2	1.3	5.8	1.4
	09/17/14	8260B	17	1.4	1.2	5.3	2.1
	06/05/14	8260B	18	3.7	1.7	8.1	2
	04/10/14	8260B	11	7.5	1.1	3.6	0.27
	11/19/13	8021B	9.9	8.2	1.9	9.8	NA

8.17 MKTF WELLS
BTEX and MTBE Analytical Results

STANDARDS			PARAMETERS				
			Benzene (mg/L)	Toluene (mg/L)	Ethylbenzene (mg/L)	Total Xylenes (mg/L)	MTBE (mg/L)
WQCC 20 NMAC 6.2.3103 (DEC 2018)			0.005	1	0.7	0.62	0.1
40 CFR 141.61 MCL			0.005	1	0.7	10	NE
NMED Tap Water (JUNE 2019)			0.00455	1.09	0.0149	0.193	0.143
EPA RSL for Tap Water (NOVEMBER 2019)			0.0046	1.1	0.0015	0.19	0.14
WELL ID	DATE SAMPLED	METHOD					
MKTF-17	10/29/19	8260B	12	23	1.1	3.1	2.5
	08/20/19	8260B	0.87	0.0026	0.64	0.078	4.3
	05/09/19	8260B	2.2	0.0022	0.49	0.15	4.3
	03/26/19	8260B	0.98	<0.005	0.09	0.021	4.6
	11/28/18	8260B	0.0036	<0.005	0.025	<0.0075	5.7
	08/24/18	8260B	0.0027	<0.005	0.12	<0.0075	5.3
	05/04/18	8260B	0.047	0.0011	0.14	0.002	7.4
	02/16/18	8260B	0.22	0.00098	0.21	<0.0075	4.9
	12/01/17	8260B	0.14	0.0008	0.17	<0.0075	1.5
	09/26/17	8260B	0.047	0.0011	0.68	<0.0075	0.94
	06/14/17	8260B	0.26	0.0017	0.58	0.0048	0.39
	03/15/17	8260B	0.29	0.0022	0.23	0.07	0.28
	11/08/16	8260B	0.76	0.0019	0.39	0.0043	0.36
	09/13/16	8260B	1.3	0.0021	0.55	<0.015	0.38
	06/10/16	8260B	1.9	0.006	0.52	0.24	0.49
	02/26/16	8260B	0.26	<0.005	0.018	0.023	0.64
	11/03/15	8260B	0.029	<0.002	0.31	<0.003	0.77
	08/18/15	8260B	0.036	0.0011	0.3	0.0018	0.64
	06/08/15	8260B	0.011	<0.001	0.018	<0.0015	0.5
	03/12/15	8260B	0.0028	<0.001	0.0059	<0.0015	0.59
	11/18/14	8260B	0.14	<0.001	0.078	<0.0015	0.57
	09/18/14	8260B	0.55	<0.01	0.24	<0.015	0.69
	06/06/14	8260B	2.6	<0.01	0.48	0.068	1.1
	04/09/14	8260B	3.5	<0.01	0.58	0.27	1.3
	11/13/13	8021B	1.8	1.6	0.71	2.7	NA
MKTF-18	10/29/19	8260B	0.16	<0.002	0.00083	<0.003	0.088
	08/19/19	--	SPH Detected - No samples were collected.				
	05/16/19	8260B	0.14	<0.002	0.0023	<0.003	0.13
	03/26/19	8260B	0.17	<0.002	0.0029	<0.003	0.22
	11/28/18	8260B	0.0009	<0.002	<0.002	<0.003	0.13
	08/24/18	8260B	0.19	<0.002	0.011	<0.003	0.11
	05/04/18	8260B	0.11	<0.002	0.014	0.00073	0.14
	02/16/18	8260B	0.13	0.00033	0.021	<0.003	0.16
	06/14/17	8260B	0.03	<0.002	0.022	<0.003	0.1
	03/01/17	8260B	0.027	0.00033	0.026	0.00085	0.093
	11/08/16	8260B	0.016	0.0003	0.014	0.00076	0.081
	09/13/16	8260B	0.016	0.000377	0.015	0.0013	0.074
	06/10/16	8260B	0.016	0.00048	0.021	0.0025	0.092
	02/26/16	8260B	0.017	0.00059	0.034	0.0056	0.071
	11/03/15	8260B	0.019	<0.002	0.041	0.017	0.083
	08/18/15	8260B	0.032	0.0016	0.054	0.019	0.1
	06/08/15	8260B	0.05	0.0033	0.049	0.031	0.082
	03/17/15	8260B	0.058	<0.005	0.017	0.029	0.091
	11/18/14	8260B	0.096	0.0076	0.09	0.047	0.1
	09/18/14	8260B	0.12	0.013	0.069	0.042	0.12
	06/06/14	8260B	0.29	0.014	0.036	0.055	0.14
	04/14/14	8260B	0.29	0.015	0.058	0.044	0.15
	11/19/13	8021B	0.33	0.37	0.13	0.47	NA

8.17 MKTF WELLS
BTEX and MTBE Analytical Results

STANDARDS			PARAMETERS				
			Benzene (mg/L)	Toluene (mg/L)	Ethylbenzene (mg/L)	Total Xylenes (mg/L)	MTBE (mg/L)
WQCC 20 NMAC 6.2.3103 (DEC 2018)			0.005	1	0.7	0.62	0.1
40 CFR 141.61 MCL			0.005	1	0.7	10	NE
NMED Tap Water (JUNE 2019)			0.00455	1.09	0.0149	0.193	0.143
EPA RSL for Tap Water (NOVEMBER 2019)			0.0046	1.1	0.0015	0.19	0.14
WELL ID	DATE SAMPLED	METHOD					
MKTF-19	10/29/19	8260B	1.6	0.013	0.61	0.61	7.9
	08/19/19	8260B	1.4	<0.02	0.72	0.69	8.3
	05/09/19	8260B	1.8	<0.02	0.77	0.61	7.8
	03/26/19	8260B	1.3	<0.02	0.71	0.61	6.9
	11/28/18	8260B	1.9	<0.02	0.63	0.57	10
	08/24/18	8260B	1.7	0.0043	0.71	0.74	9.7
	05/04/18	8260B	2	0.0057	0.87	0.82	11
	02/16/18	8260B	1.9	0.0037	0.74	0.64	10
	12/01/17	8260B	1.9	0.0059	0.75	0.75	11
	09/26/17	8260B	3.2	0.014	0.8	0.87	12
	06/14/17	8260B	2.3	0.0084	0.78	0.9	10
	03/15/17	8260B	1.8	0.0098	0.6	0.92	9
	11/08/16	8260B	1.3	0.0068	0.7	1	10
	09/13/16	8260B	1.4	0.0075	0.69	0.92	8.9
	06/10/16	8260B	1.5	0.0064	0.69	0.66	7.9
	02/25/16	8260B	1.5	0.005	0.79	0.67	8.6
	11/03/15	8260B	2.8	0.022	0.76	0.93	8.4
	08/18/15	8260B	2.4	0.015	0.74	0.45	8.8
	06/08/15	8260B	1.8	0.013	0.59	0.31	9.1
	03/12/15	8260B	1.4	<0.01	0.43	0.15	9.7
	11/18/14	8260B	2.3	<0.05	0.74	0.36	9.7
	09/24/14	8260B	1.8	<0.05	0.73	0.76	11
	04/09/14	8260B	1.4	<0.05	0.68	0.61	9.7
	11/05/13	8021B	0.64	0.14	0.47	1.1	NA
MKTF-20	11/05/19	8260B	2.4	<0.01	0.26	0.096	0.17
	08/21/19	8260B	4.8	0.009	1.1	3.7	0.035
	05/14/19	8260B	2.3	<0.01	1	3.5	0.032
	02/20/19	8260B	2.1	0.0021	0.23	0.14	0.22
	11/29/18	8260B	3	0.02	0.12	2.5	0.026
	08/31/18	8260B	9.9	0.064	0.77	9.1	0.096
	05/11/18	8260B	13	0.14	1.3	13	0.13
	02/15/18	8260B	12	0.19	0.96	12	0.055
	11/29/17	8260B	17	0.24	0.8	11	0.1
	09/26/17	8260B	16	0.34	0.58	11	0.17
	06/12/17	8260B	21	3.5	0.7	14	0.16
	03/14/17	8260B	17	2.2	0.26	9.8	0.23
	11/03/16	8260B	13	0.4	1.1	9.2	0.19
	09/12/16	8260B	18	0.48	1.3	8.8	0.16
	06/09/16	8260B	11	0.39	0.85	7.9	0.16
	03/01/16	8260B	13	0.47	1.1	9.2	0.13
	03/16/15	8260B	7	2.3	0.089	9.6	<0.05
	11/18/14	8260B	4.4	1.3	0.48	10	0.083
	04/11/14	8260B	25	17	2.8	14	0.38

8.17 MKTF WELLS
BTEX and MTBE Analytical Results

STANDARDS			PARAMETERS				
			Benzene (mg/L)	Toluene (mg/L)	Ethylbenzene (mg/L)	Total Xylenes (mg/L)	MTBE (mg/L)
WQCC 20 NMAC 6.2.3103 (DEC 2018)			0.005	1	0.7	0.62	0.1
40 CFR 141.61 MCL			0.005	1	0.7	10	NE
NMED Tap Water (JUNE 2019)			0.00455	1.09	0.0149	0.193	0.143
EPA RSL for Tap Water (NOVEMBER 2019)			0.0046	1.1	0.0015	0.19	0.14
WELL ID	DATE SAMPLED	METHOD					
MKTF-21	11/05/19	8260B	5.6	0.0082	1.1	2.8	0.29
	08/22/19	8260B	5.4	<0.02	0.68	0.50	0.29
	05/14/19	8260B	2.4	<0.02	0.28	0.22	0.29
	02/20/19	8260B	2	0.016	1.2	7.1	0.015
	11/29/18	8260B	2	<0.02	0.11	0.14	0.22
	08/31/18	8260B	5.9	0.013	0.8	0.99	0.5
	05/11/18	8260B	4.8	0.0074	0.47	0.67	0.52
	02/15/18	8260B	3.4	0.0035	0.31	0.39	0.39
	11/28/17	8260B	4.9	0.018	0.52	1.4	0.52
	09/26/17	8260B	6.3	0.016	0.61	0.83	0.63
	06/21/17	8260B	10	0.041	0.69	2.6	1.2
	03/14/17	8260B	8	0.038	0.46	2	0.61
	11/03/16	8260B	7.6	0.068	0.4	2.3	0.77
	09/12/16	8260B	9.3	0.059	0.48	2	0.68
	06/09/16	8260B	7.5	0.17	0.25	1.3	0.55
	03/01/16	8260B	4.6	0.34	0.15	1.3	0.48
	06/10/15	8260B	6.2	0.48	0.18	0.81	0.82
	03/16/15	8260B	3.7	0.26	0.013	0.27	0.63
	04/11/14	8260B	7.2	13	2.1	11	0.58
MKTF-22	10/24/19	8260B	3.4	<0.02	0.27	<0.03	2.6
	08/20/19	8260B	3.2	0.0087	0.26	0.014	2.7
	05/09/19	8260B	3.5	0.0091	0.33	<0.03	3.3
	03/26/19	8260B	2.4	<0.02	0.19	<0.03	4.1
	11/28/18	8260B	3	0.0084	0.17	<0.03	6
	08/30/18	8260B	2.2	0.0056	0.12	<0.03	5.4
	05/10/18	8206B	2.5	0.0088	0.15	0.014	5.9
	02/08/18	8260B	2.3	0.0093	0.14	0.018	5.7
	11/28/17	8260B	2.5	0.013	0.18	0.025	6
	10/03/17	8260B	2.4	0.018	0.28	0.037	4.9
	06/08/17	8260B	2.9	0.014	0.18	0.022	5.9
	03/08/17	8260B	3.5	0.03	0.42	0.046	6.5
	11/01/16	8260B	3.7	0.032	0.46	<0.03	8
	09/10/16	8260B	4.2	0.03	0.43	0.049	8.8
	06/10/16	8260B	3.8	0.035	0.5	0.062	6.5
	02/25/16	8260B	4	0.032	0.57	0.07	7.2
	11/09/15	8260B	2.7	<0.02	0.35	<0.03	5.5
	08/20/15	8260B	1.2	<0.02	0.097	<0.03	4.8
	06/09/15	8260B	2.9	0.022	0.32	0.047	5.7
	03/12/15	8260B	2.6	<0.02	0.25	<0.03	5.1
	11/17/14	8260B	1.6	<0.01	0.09	<0.0015	3.9
	09/23/14	--	Dry - No samples were collected.				
	04/10/14	8260B	2.3	0.021	0.28	0.032	3.7
	11/19/13	8021B	1.3	0.0075	0.072	0.016	NA

8.17 MKTF WELLS
BTEX and MTBE Analytical Results

STANDARDS			PARAMETERS				
			Benzene (mg/L)	Toluene (mg/L)	Ethylbenzene (mg/L)	Total Xylenes (mg/L)	MTBE (mg/L)
WQCC 20 NMAC 6.2.3103 (DEC 2018)			0.005	1	0.7	0.62	0.1
40 CFR 141.61 MCL			0.005	1	0.7	10	NE
NMED Tap Water (JUNE 2019)			0.00455	1.09	0.0149	0.193	0.143
EPA RSL for Tap Water (NOVEMBER 2019)			0.0046	1.1	0.0015	0.19	0.14
WELL ID	DATE SAMPLED	METHOD					
MKTF-23	10/29/19	8260B	4.8	8.3	1.2	7.1	0.33
	08/20/19	--	SPH Detected - No samples were collected.				
	05/09/19	--	SPH Detected - No samples were collected.				
	03/26/19	8260B	3.6	8.4	0.99	7.4	0.48
	06/10/16	8260B	3.2	0.98	0.3	6.1	1.4
	02/25/16	8260B	3.1	1.2	0.31	6.7	1.6
	11/09/15	8260B	2.6	3	0.57	7.8	1.4
	08/21/15	8260B	3	2.7	0.42	6.2	1.2
	06/09/15	8260B	2.9	3	0.51	6.5	1.1
	03/12/15	8260B	3.3	4.8	0.6	8.1	1.1
	11/17/14	8260B	3.6	3	0.47	4.5	0.57
	09/23/14	8260B	2.7	1.4	0.34	1.6	0.48
	04/10/14	--	SPH Detected - No samples were collected.				
	11/05/13	8021B	0.92	1	0.23	0.66	NA
MKTF-24	10/23/19	8260B	5	0.024	0.31	<0.03	0.11
	08/23/19	8260B	4.1	0.022	0.24	0.012	0.11
	05/06/19	8260B	3	0.014	0.12	<0.03	0.11
	02/25/19	--	Well not sampled.				
	11/15/18	8260B	4.8	0.021	0.2	<0.03	0.12
	08/20/18	8260B	4.8	0.025	0.32	<0.03	0.12
	05/01/18	8260B	5.5	0.029	0.3	0.0065	0.13
	02/06/18	8260B	6.3	0.03	0.41	0.015	0.17
	11/20/17	8260B	5.5	0.023	0.32	0.018	0.16
	10/03/17	8260B	2.6	0.019	0.071	<0.03	0.16
	06/05/17	8260B	6	0.024	0.3	0.0083	0.2
	03/29/17	8260B	3	0.015	0.042	<0.03	0.19
	10/28/16	8260B	6.1	0.025	0.3	0.015	0.23
	09/07/16	8260B	5.3	0.021	0.21	0.011	0.17
	06/08/16	8260B	3	0.018	0.074	0.006	0.21
	02/22/16	8260B	5.6	0.027	0.31	0.0088	0.21
	11/04/15	8260B	2.8	<0.02	0.054	<0.03	0.21
	08/20/15	8260B	2.7	<0.02	0.056	<0.03	0.2
	06/10/15	8260B	2.9	0.015	0.046	<0.0075	0.17
	03/11/15	8260B	2.6	0.012	0.031	<0.0075	0.17
	11/14/14	8260B	1.6	0.0095	0.049	0.0029	0.063
	09/24/14	8260B	1.6	0.0087	0.058	<0.003	0.17
	04/08/14	8260B	0.45	0.0067	0.065	0.0023	0.18
	11/01/13	8021B	1.2	<0.02	0.23	<0.04	NA

8.17 MKTF WELLS
BTEX and MTBE Analytical Results

STANDARDS			PARAMETERS				
			Benzene (mg/L)	Toluene (mg/L)	Ethylbenzene (mg/L)	Total Xylenes (mg/L)	MTBE (mg/L)
WQCC 20 NMAC 6.2.3103 (DEC 2018)			**0.005**	**1**	**0.7**	**0.62**	**0.1**
40 CFR 141.61 MCL			0.005	1	0.7	10	NE
NMED Tap Water (JUNE 2019)			0.00455	1.09	0.0149	0.193	0.143
EPA RSL for Tap Water (NOVEMBER 2019)			0.0046	1.1	0.0015	0.19	0.14
WELL ID	**DATE SAMPLED**	**METHOD**					
MKTF-25	10/23/19	8260B	**0.37**	<0.005	0.00081	<0.0075	**0.88**
	08/27/19	8260B	**0.13**	<0.005	<0.005	<0.0075	**0.85**
	05/06/19	8260B	**0.37**	<0.01	<0.01	<0.015	**0.29**
	02/14/19	--	Well not sampled.				
	11/15/18	8260B	**1.7**	0.0059	0.0029	<0.015	**0.2**
	08/17/18	8260B	**4.5**	0.017	0.026	<0.015	**0.25**
	05/06/18	8260B	**3.4**	0.015	0.15	0.009	**0.26**
	02/05/18	8260B	**2**	0.01	0.11	0.003	**0.25**
	11/21/17	8260B	**1.6**	0.011	0.14	0.013	**0.2**
	09/25/17	8260B	**1.6**	0.01	0.13	0.014	**0.23**
	06/05/17	8260B	**0.62**	0.0028	0.021	0.003	**0.12**
	03/29/17	8260B	**0.78**	0.0045	0.024	0.0043	**0.12**
	11/01/16	8260B	**0.96**	0.006	0.046	0.0046	**0.19**
	09/09/16	8260B	**0.92**	0.005	0.018	<0.015	**0.15**
	06/09/16	8260B	**0.99**	0.013	0.19	0.018	**0.48**
	02/23/16	8260B	**1.2**	0.011	0.19	0.0064	**0.2**
	11/05/15	8260B	**1.1**	0.0087	0.14	0.016	**0.25**
	08/21/15	8260B	**1.2**	0.0099	0.13	0.0089	**0.24**
	06/10/15	8260B	**1**	0.0066	0.099	0.016	**0.21**
	03/11/15	8260B	**0.97**	0.012	0.17	<0.0075	**0.27**
	11/14/14	8260B	**0.58**	<0.005	0.023	<0.0075	**0.18**
	09/23/14	8260B	**0.53**	<0.01	0.012	<0.015	**0.23**
	04/08/14	8260B	**1**	0.0092	0.13	0.013	**0.27**
	11/01/13	8021B	**1.4**	<0.02	0.16	<0.04	NA
MKTF-26			SPH Detected - No samples were collected.				
	06/09/16	8260B	**0.33**	0.019	0.0036	0.0077	0.082
	02/22/16	8260B	**0.15**	0.0014	<0.005	<0.0075	0.055
	11/04/15	8260B	**0.76**	0.0072	0.0069	<0.0075	0.094
	08/20/15	8260B	**0.38**	0.005	<0.005	<0.0075	0.065
	06/10/15	8260B	**0.8**	0.0087	0.0069	<0.0075	0.079
	03/11/15	8260B	**0.8**	0.0078	0.0071	<0.0075	0.099
	11/14/14	8260B	**0.97**	0.011	<0.005	<0.0075	0.094
	09/24/14	8260B	**1.6**	0.019	0.012	0.0016	0.084
	04/08/14	8260B	**0.017**	<0.001	<0.001	<0.0015	0.049
	11/01/13	8021B	**0.57**	0.008	0.15	0.002	NA

8.17 MKTF WELLS
BTEX and MTBE Analytical Results

STANDARDS			PARAMETERS				
			Benzene (mg/L)	Toluene (mg/L)	Ethylbenzene (mg/L)	Total Xylenes (mg/L)	MTBE (mg/L)
WQCC 20 NMAC 6.2.3103 (DEC 2018)			**0.005**	**1**	**0.7**	**0.62**	**0.1**
40 CFR 141.61 MCL			0.005	1	0.7	10	NE
NMED Tap Water (JUNE 2019)			0.00455	1.09	0.0149	0.193	0.143
EPA RSL for Tap Water (NOVEMBER 2019)			0.0046	1.1	0.0015	0.19	0.14
WELL ID	**DATE SAMPLED**	**METHOD**					
MKTF-27	10/23/19	8260B	<0.001*	<0.001	<0.001	<0.0015	0.014
	08/21/19	8260B	**0.0097**	<0.001	<0.001	<0.0015	0.024
	05/06/19	8260B	*<0.001**	<0.001	<0.001	<0.0015	0.019
	03/28/19	8260B	*<0.001**	<0.001	<0.001	<0.0015	0.0018
	11/15/18	8260B	*<0.001**	<0.001	<0.001	<0.0015	0.021
	08/20/18	8260B	*<0.001**	<0.001	<0.001	<0.0015	0.014
	05/01/18	8260B	*<0.001**	<0.001	<0.001	<0.0015	0.025
	02/06/18	8260B	*<0.001**	<0.001	<0.001	<0.0015	0.018
	11/20/17	8260B	*<0.001**	<0.001	<0.001	<0.0015	0.023
	10/03/17	8260B	0.00013	<0.001	<0.001	<0.0015	0.025
	06/05/17	8260B	*<0.001**	<0.001	<0.001	<0.0015	0.031
	03/29/17	8260B	*<0.001**	<0.001	<0.001	<0.0015	0.022
	10/28/16	8260B	*<0.001**	<0.001	<0.001	<0.0015	0.021
	09/07/16	8260B	0.00031	0.00021	<0.001	<0.0015	0.026
	06/08/16	8260B	0.00015	0.0004	0.00015	0.00091	0.042
	02/22/16	8260B	*<0.001**	<0.001	<0.001	<0.0015	0.015
	11/04/15	8260B	*<0.001**	<0.001	<0.001	<0.0015	0.031
	08/20/15	8260B	*<0.001**	<0.001	<0.001	<0.0015	0.033
	06/09/15	8260B	*<0.001**	<0.001	<0.001	<0.0015	0.034
	03/11/15	8260B	*<0.001**	<0.001	<0.001	<0.0015	0.0089
	11/14/14	8260B	*<0.001**	<0.001	<0.001	<0.0015	0.019
	09/24/14	8260B	*<0.001**	<0.001	<0.001	<0.0015	0.011
	04/08/14	8260B	<0.002	<0.002	<0.002	<0.003	0.038
	11/19/13	8021B	*<0.001**	<0.001	<0.001	<0.002	NA
MKTF-28	10/22/19	8260B	*<0.001**	<0.001	<0.001	<0.0015	0.0049
	08/21/19	8260B	*<0.001**	<0.001	<0.001	<0.0015	0.0045
	05/06/19	8260B	*<0.001**	<0.001	<0.001	<0.0015	0.00074
	03/28/19	8260B	*<0.001**	<0.001	<0.001	<0.0015	0.00082
	11/15/18	8260B	*<0.001**	<0.001	<0.001	<0.0015	0.0028
	08/20/18	8260B	*<0.001**	<0.001	<0.001	<0.0015	0.008
	05/01/18	8260B	*<0.001**	<0.001	<0.001	<0.0015	0.0094
	02/06/18	8260B	*<0.001**	<0.001	<0.001	<0.0015	0.00074
	11/20/17	8260B	*<0.001**	<0.001	<0.001	<0.0015	0.0033
	10/03/17	8260B	*<0.001**	<0.001	<0.001	<0.0015	0.00035
	06/05/17	8260B	*<0.001**	<0.001	<0.001	<0.0015	0.00044
	03/29/17	8260B	*<0.001**	<0.001	<0.001	<0.0015	0.00097
	10/28/16	8260B	*<0.001**	<0.001	<0.001	<0.0015	0.00052
	09/08/16	8260B	*<0.001**	<0.001	<0.001	<0.0015	0.0021
	06/08/16	8260B	*<0.001**	<0.001	<0.001	<0.0015	0.00054
	02/23/16	8260B	*<0.001**	<0.001	<0.001	<0.0015	<0.001
	11/04/15	8260B	*<0.001**	<0.001	<0.001	<0.0015	0.01
	08/20/15	8260B	*<0.001**	<0.001	<0.001	<0.0015	0.0014
	06/09/15	8260B	*<0.001**	<0.001	<0.001	<0.0015	<0.001
	03/11/15	8260B	*<0.001**	<0.001	<0.001	<0.0015	<0.001
	11/14/14	8260B	*<0.001**	<0.001	<0.001	<0.0015	0.013
	09/24/14	8260B	*<0.001**	<0.001	<0.001	<0.0015	0.016

8.17 MKTF WELLS
BTEX and MTBE Analytical Results

STANDARDS			PARAMETERS				
			Benzene (mg/L)	Toluene (mg/L)	Ethylbenzene (mg/L)	Total Xylenes (mg/L)	MTBE (mg/L)
WQCC 20 NMAC 6.2.3103 (DEC 2018)			0.005	1	0.7	0.62	0.1
40 CFR 141.61 MCL			0.005	1	0.7	10	NE
NMED Tap Water (JUNE 2019)			0.00455	1.09	0.0149	0.193	0.143
EPA RSL for Tap Water (NOVEMBER 2019)			0.0046	1.1	0.0015	0.19	0.14
WELL ID	DATE SAMPLED	METHOD					
MKTF-29	10/22/19	8260B	*<0.001**	<0.001	<0.001	<0.0015	0.012
	08/23/19	8260B	*<0.001**	<0.001	<0.001	<0.0015	0.0086
	05/06/19	8260B	*<0.001**	<0.001	<0.001	<0.0015	0.0048
	03/28/19	8260B	*<0.001**	<0.001	<0.001	<0.0015	0.0041
	11/15/18	8260B	*<0.001**	<0.001	<0.001	<0.0015	0.0037
	08/20/18	8260B	*<0.001**	<0.001	<0.001	<0.0015	0.0047
	05/01/18	8260B	*<0.001**	<0.001	<0.001	<0.0015	0.0073
	02/06/18	8260B	*<0.001**	<0.001	<0.001	<0.0015	0.011
	11/20/17	8260B	*<0.001**	<0.001	<0.001	<0.0015	0.0095
	10/03/17	8260B	*<0.001**	<0.001	<0.001	<0.0015	0.0072
	06/05/17	8260B	*<0.001**	<0.001	<0.001	<0.0015	0.0058
	03/29/17	8260B	*<0.001**	<0.001	<0.001	<0.0015	0.0094
	10/28/16	8260B	*<0.001**	<0.001	<0.001	<0.0015	0.005
	09/07/16	8260B	*<0.001**	<0.001	<0.001	<0.0015	0.0024
	06/09/16	8260B	*<0.001**	<0.001	<0.001	<0.0015	0.0088
	02/23/16	8260B	*<0.001**	<0.001	<0.001	<0.0015	0.012
	11/04/15	8260B	*<0.001**	<0.001	<0.001	<0.0015	0.01
	08/20/15	8260B	*<0.001**	<0.001	<0.001	<0.0015	0.011
	06/10/15	8260B	*<0.001**	<0.001	<0.001	<0.0015	0.014
	03/11/15	8260B	*<0.001**	<0.001	<0.001	<0.0015	0.017
	09/24/14	8260B	*<0.001**	<0.001	<0.001	<0.0015	0.013
	04/08/14	8260B	*<0.001**	<0.001	<0.001	<0.015	0.012
MKTF-30	10/23/19	8260B	*<0.001**	<0.001	<0.001	<0.0015	0.0015
	08/23/19	8260B	*<0.001**	<0.001	<0.001	<0.0015	0.001
	05/06/19	8260B	*<0.001**	<0.001	<0.001	<0.0015	0.0018
	03/28/19	8260B	*<0.001**	<0.001	<0.001	<0.0015	0.0013
	11/15/18	8260B	*<0.001**	<0.001	<0.001	<0.0015	0.0021
	08/20/18	8260B	*<0.001**	<0.001	<0.001	<0.0015	0.0018
	05/01/18	8260B	*<0.001**	<0.001	<0.001	<0.0015	0.0018
	02/06/18	8260B	0.00022	<0.001	<0.001	<0.0015	0.0028
	11/20/17	8260B	*<0.001**	<0.001	<0.001	<0.0015	0.0014
	10/03/17	8260B	*<0.001**	<0.001	<0.001	<0.0015	0.0011
	06/05/17	8260B	<0.002	<0.002	<0.002	<0.003	0.002
	03/29/17	8260B	*<0.001**	<0.001	<0.001	<0.0015	0.0028
	10/28/16	8260B	*<0.001**	<0.001	<0.001	<0.0015	0.002
	09/07/16	8260B	0.0006	<0.001	0.00019	<0.0015	0.00084
	06/09/16	8260B	*<0.001**	<0.001	<0.001	<0.0015	0.0036
	02/23/16	8260B	*<0.001**	<0.001	<0.001	<0.0015	0.0023
	11/04/15	8260B	*<0.001**	<0.001	<0.001	<0.0015	0.0025
	08/20/15	8260B	*<0.001**	<0.001	<0.001	<0.0015	0.0019
	06/10/15	8260B	*<0.001**	<0.001	<0.001	<0.0015	0.0027
	03/11/15	8260B	*<0.001**	<0.001	<0.001	<0.0015	0.0019
	11/17/14	8260B	*<0.001**	<0.001	<0.001	<0.0015	0.0037
	09/24/14	8260B	*<0.001**	<0.001	<0.001	<0.0015	0.0059
	04/09/14	8260B	*<0.001**	<0.001	<0.001	<0.0015	0.021

8.17 MKTF WELLS
BTEX and MTBE Analytical Results

STANDARDS			PARAMETERS				
			Benzene (mg/L)	Toluene (mg/L)	Ethylbenzene (mg/L)	Total Xylenes (mg/L)	MTBE (mg/L)
WQCC 20 NMAC 6.2.3103 (DEC 2018)			**0.005**	**1**	**0.7**	**0.62**	**0.1**
40 CFR 141.61 MCL			0.005	1	0.7	10	NE
NMED Tap Water (JUNE 2019)			0.00455	1.09	0.0149	0.193	0.143
EPA RSL for Tap Water (NOVEMBER 2019)			0.0046	1.1	0.0015	0.19	0.14
WELL ID	**DATE SAMPLED**	**METHOD**					
MKTF-31	10/22/19	8260B	0.0006	<0.001	<0.001	<0.0015	0.10
	08/23/19	8260B	0.00072	<0.001	<0.001	<0.0015	**0.11**
	05/06/19	8260B	0.00045	<0.001	<0.001	<0.0015	0.09
	02/20/19	8260B	0.001	<0.001	<0.001	<0.0015	**0.12**
	11/15/18	8260B	0.0011	<0.001	<0.001	<0.0015	0.088
	08/17/18	8260B	0.00073	<0.001	<0.001	<0.0015	0.088
	05/06/18	8260B	0.00099	<0.001	<0.001	<0.0015	**0.11**
	02/05/18	8260B	0.0013	<0.001	<0.001	<0.0015	0.085
	11/21/17	8260B	0.00062	<0.001	<0.001	<0.0015	0.066
	09/25/17	8260B	0.00085	<0.001	<0.001	<0.0015	0.076
	06/05/17	8260B	0.00066	<0.001	<0.001	<0.0015	0.072
	03/07/17	8260B	0.00062	<0.001	<0.001	<0.0015	0.074
	10/31/16	8260B	0.00048	0.00015	<0.001	<0.0015	0.07
	09/08/16	8260B	0.00077	<0.001	<0.001	<0.0015	0.063
	06/09/16	8260B	0.00075	<0.001	<0.001	<0.0015	0.08
	02/23/16	8260B	0.00062	<0.001	<0.001	<0.0015	0.061
	11/04/15	8260B	*<0.001**	<0.001	<0.001	<0.0015	0.079
	08/21/15	8260B	*<0.001**	<0.001	<0.001	<0.0015	0.064
	06/10/15	8260B	*<0.001**	<0.001	<0.001	<0.0015	0.056
	03/11/15	8260B	*<0.001**	<0.001	<0.001	<0.0015	0.054
	11/17/14	8260B	*<0.001**	<0.001	<0.001	<0.0015	0.058
	09/23/14	8260B	*<0.001**	<0.001	<0.001	<0.0015	0.055
	04/08/14	8260B	*<0.001**	<0.001	<0.001	<0.0015	0.055
MKTF-32	10/23/19	8260B	0.00036	<0.002	<0.002	<0.003	**0.67**
	08/20/19	8260B	0.00031	<0.001	<0.001	<0.0015	**0.61**
	05/07/19	8260B	<0.002	<0.002	<0.002	<0.003	**0.74**
	02/13/19	8260B	<0.002	<0.002	<0.002	<0.003	**0.84**
	11/15/18	8260B	<0.002	<0.002	<0.002	<0.003	**0.81**
	08/28/18	8206B	0.00076	<0.002	<0.002	<0.003	**0.78**
	05/09/18	8260B	0.0004	<0.001	<0.001	<0.0015	**0.82**
	02/07/18	8260B	0.00049	<0.001	<0.001	<0.0015	**0.74**
	11/27/17	8260B	0.00028	<0.001	<0.001	<0.0015	**0.6**
	09/25/17	8260B	0.00038	<0.001	<0.001	<0.0015	**0.69**
	06/06/17	8260B	0.00042	<0.001	<0.001	<0.0015	**0.64**
	03/07/17	8260B	0.00045	<0.001	<0.001	<0.0015	**0.66**
	10/31/16	8260B	0.00049	<0.001	<0.001	<0.0015	**0.63**
	09/09/16	8260B	0.00047	<0.002	<0.002	<0.003	**0.75**
	06/09/16	8260B	0.00081	<0.002	<0.002	<0.003	**0.64**
	02/24/16	8260B	0.0004	<0.001	<0.001	<0.0015	**0.62**
	11/05/15	8260B	*<0.001**	<0.001	<0.001	<0.0015	**0.59**
	08/21/15	8260B	<0.002	<0.002	<0.002	<0.003	**0.49**
	06/09/15	8260B	*<0.001**	<0.001	<0.001	<0.0015	**0.59**
	03/12/15	8260B	*<0.001**	<0.001	<0.001	<0.0015	**0.54**
	11/17/14	8260B	*<0.001**	<0.001	<0.001	<0.0015	**0.4**
	09/23/14	8260B	<0.005	<0.005	<0.005	<0.0075	**0.32**
	04/09/14	8260B	*<0.001**	<0.001	<0.001	<0.0015	**0.15**

8.17 MKTF WELLS
BTEX and MTBE Analytical Results

STANDARDS			PARAMETERS				
			Benzene (mg/L)	Toluene (mg/L)	Ethylbenzene (mg/L)	Total Xylenes (mg/L)	MTBE (mg/L)
WQCC 20 NMAC 6.2.3103 (DEC 2018)			**0.005**	**1**	**0.7**	**0.62**	**0.1**
40 CFR 141.61 MCL			0.005	1	0.7	10	NE
NMED Tap Water (JUNE 2019)			0.00455	1.09	0.0149	0.193	0.143
EPA RSL for Tap Water (NOVEMBER 2019)			0.0046	1.1	0.0015	0.19	0.14
WELL ID	**DATE SAMPLED**	**METHOD**					
MKTF-33	10/24/19	8260B	<0.002	<0.002	<0.002	<0.003	**0.67**
	08/20/19	8260B	<0.005	<0.005	<0.005	<0.0015	**0.73**
	05/09/19	8260B	<0.005	<0.005	<0.005	<0.0015	**0.3**
	03/26/19	8260B	<0.005	<0.005	<0.005	<0.0075	**0.5**
	11/28/18	8260B	<0.002	<0.002	<0.002	<0.003	**0.45**
	08/30/18	8260B	*<0.001**	<0.001	<0.001	<0.003	**0.58**
	05/10/18	8260B	*<0.001**	<0.001	<0.001	<0.0015	**0.57**
	02/08/18	8260B	*<0.001**	<0.001	<0.001	0.00055	**0.41**
	11/28/17	8260B	0.00011	<0.001	<0.001	<0.0015	**0.53**
	09/25/17	8260B	*<0.001**	<0.001	<0.001	<0.0015	**0.25**
	06/08/17	8260B	*<0.001**	<0.001	<0.001	<0.0015	**0.22**
	03/08/17	8260B	*<0.001**	<0.001	<0.001	<0.0015	**0.23**
	11/01/16	8260B	*<0.001**	0.00015	0.00019	<0.0015	**0.2**
	09/10/16	8260B	*<0.001**	<0.001	<0.001	<0.0015	**0.27**
	06/10/16	8260B	*<0.001**	<0.001	<0.001	<0.0015	**0.4**
	02/25/16	8260B	0.00016	<0.001	<0.001	<0.0015	**0.31**
	11/09/15	8260B	*<0.001**	<0.001	<0.001	<0.0015	**0.58**
	08/21/15	8260B	*<0.001**	<0.001	<0.001	<0.0015	**0.63**
	06/09/15	8260B	*<0.001**	<0.001	<0.001	<0.0015	**0.49**
	03/12/15	8260B	*<0.001**	<0.001	<0.001	<0.0015	**0.48**
	11/17/14	8260B	*<0.001**	<0.001	<0.001	<0.0015	**0.41**
	09/23/14	8260B	<0.005	<0.005	<0.005	<0.0075	**0.45**
	04/10/14	8260B	**0.028**	<0.001	<0.001	<0.0015	**0.36**
MKTF-34	10/29/19	8260B	*<0.001**	<0.001	<0.001	<0.0015	0.00058
	08/19/19	8260B	*<0.001**	<0.001	<0.001	<0.0015	<0.001
	05/09/19	8260B	*<0.001**	<0.001	<0.001	<0.0015	<0.001
	03/26/19	8260B	*<0.001**	<0.001	<0.001	<0.0015	0.001
	11/28/18	8260B	*<0.001**	<0.001	<0.001	<0.0015	0.001
	08/24/18	8260B	0.00024	<0.001	<0.001	<0.0015	0.00087
	05/04/18	8260B	*<0.001**	<0.001	<0.001	<0.0015	0.00087
	02/16/18	8260B	*<0.001**	<0.001	<0.001	<0.0015	0.00066
	12/01/17	8260B	0.000096	<0.001	<0.001	<0.0015	0.00075
	09/26/17	8260B	0.0003	<0.001	0.00014	<0.0015	0.00078
	06/14/17	8260B	*<0.001**	<0.001	<0.001	<0.0015	0.00038
	03/01/17	8260B	*<0.001**	<0.001	<0.001	<0.0015	0.00058
	11/08/16	8260B	0.00014	<0.001	0.00016	<0.0015	0.00097
	09/13/16	8260B	*<0.001**	<0.001	<0.001	<0.0015	0.00035
	06/10/16	8260B	0.00045	<0.001	0.00026	<0.0015	0.00058
	02/25/16	8260B	*<0.001**	<0.001	<0.001	<0.0015	<0.001
	11/03/15	8260B	*<0.001**	<0.001	<0.001	<0.0015	<0.001
	08/18/15	8260B	*<0.001**	<0.001	<0.001	<0.0015	<0.001
	06/08/15	8260B	*<0.001**	<0.001	<0.001	<0.0015	<0.001
	03/12/14	8260B	*<0.001**	<0.001	<0.001	<0.0015	<0.001
	11/17/14	8260B	*<0.001**	<0.001	<0.001	<0.0015	<0.001
	09/24/14	8260B	*<0.001**	<0.001	<0.001	<0.0015	<0.001
	04/09/14	8260B	<0.002	<0.002	<0.002	<0.003	<0.002

8.17 MKTF WELLS
BTEX and MTBE Analytical Results

STANDARDS			PARAMETERS				
			Benzene (mg/L)	Toluene (mg/L)	Ethylbenzene (mg/L)	Total Xylenes (mg/L)	MTBE (mg/L)
WQCC 20 NMAC 6.2.3103 (DEC 2018)			**0.005**	**1**	**0.7**	**0.62**	**0.1**
40 CFR 141.61 MCL			0.005	1	0.7	10	NE
NMED Tap Water (JUNE 2019)			0.00455	1.09	0.0149	0.193	0.143
EPA RSL for Tap Water (NOVEMBER 2019)			0.0046	1.1	0.0015	0.19	0.14
WELL ID	**DATE SAMPLED**	**METHOD**					
MKTF-35	10/29/19	8260B	**0.056**	<0.001	0.0022	<0.0015	**0.12**
	08/19/19	8260B	**0.022**	<0.001	0.003	0.00066	0.026
	05/16/19	8260B	**0.014**	<0.001	0.0024	<0.0015	0.042
	03/26/19	8260B	**0.021**	<0.001	0.0034	<0.0015	0.017
	11/28/18	8260B	**0.019**	0.00017	0.0012	<0.0015	0.077
	08/23/18	8260B	**0.011**	<0.001	0.00068	<0.0015	0.063
	05/03/18	8260B	**0.0099**	<0.001	0.00074	<0.0015	0.056
	02/18/18	8260B	0.0024	0.0034	0.00038	<0.0015	0.078
	11/30/17	8260B	0.0015	0.0001	0.00029	<0.0015	**0.11**
	09/27/17	8260B	0.0015	<0.001	0.00015	<0.0015	0.077
	06/14/17	8260B	0.0023	<0.001	0.0011	<0.0015	0.033
	03/01/17	8260B	**0.053**	0.00011	0.0027	<0.0015	0.0079
	11/03/16	8260B	**0.065**	0.00026	0.055	0.01	0.01
	09/13/16	8260B	**0.37**	0.00052	0.025	0.011	0.012
	06/10/16	8260B	**0.067**	0.00027	0.012	0.0055	0.019
	02/26/16	8260B	**0.046**	<0.005	0.034	0.0045	0.02
	11/03/15	8260B	**0.19**	<0.001	0.039	0.0023	0.048
	08/18/15	8260B	**0.97**	<0.005	0.16	<0.0075	0.061
	06/04/15	8260B	**0.79**	0.0023	0.19	0.0021	0.027
	03/17/15	8260B	**0.47**	0.0052	0.32	0.17	0.033
	11/21/14	8260B	**0.039**	<0.001	0.052	0.073	0.066
MKTF-36	11/06/19	--	SPH Detected - No samples were collected				
	08/19/19	--	Well paved over and inaccessible - no samples were collected				
	05/14/19	--	Well paved over and inaccessible - no samples were collected				
	03/25/19	--	Well paved over and inaccessible - no samples were collected				
	11/29/18	--	Well paved over and inaccessible - no samples were collected				
	09/05/18	8260B	**7.4**	0.019	**1.5**	0.11	**1.3**
	05/03/18	8260B	**9.4**	0.03	**1.9**	0.19	**2.1**
	02/15/18	8260B	**8.4**	0.02	**1.5**	0.16	**2.5**
	11/30/17	8260B	**9.5**	0.03	**1.7**	0.22	**2.9**
	09/27/17	8260B	**9.1**	0.023	**1.6**	0.067	**2.3**
	06/14/17	8260B	**9.4**	0.017	**1.6**	0.27	**3.9**
	03/01/17	8260B	**8.6**	0.013	**1.4**	0.032	**8**
	11/08/16	8260B	**8.4**	0.021	**1.3**	0.13	**6**
	09/13/16	--	SPH Detected - No samples were collected.				
	06/10/16	--	SPH Detected - No samples were collected.				
	03/17/16	--	SPH Detected - No samples were collected.				
	11/03/15	--	SPH Detected - No samples were collected.				
	08/18/15	8260B	**9**	0.033	**1.6**	0.064	**8**
	06/04/15	8260B	**8.1**	0.034	**1.6**	0.14	**8.4**
	03/17/15	8260B	**8.3**	0.023	**1.4**	0.078	**8.3**
	11/21/14	8260B	**8.4**	0.032	**1.5**	0.56	**7.2**

8.17 MKTF WELLS
BTEX and MTBE Analytical Results

STANDARDS			PARAMETERS				
			Benzene (mg/L)	Toluene (mg/L)	Ethylbenzene (mg/L)	Total Xylenes (mg/L)	MTBE (mg/L)
WQCC 20 NMAC 6.2.3103 (DEC 2018)			**0.005**	**1**	**0.7**	**0.62**	**0.1**
40 CFR 141.61 MCL			0.005	1	0.7	10	NE
NMED Tap Water (JUNE 2019)			0.00455	1.09	0.0149	0.193	0.143
EPA RSL for Tap Water (NOVEMBER 2019)			0.0046	1.1	0.0015	0.19	0.14
WELL ID	**DATE SAMPLED**	**METHOD**					
MKTF-37	10/28/19	--	SPH Detected - No samples were collected.				
	08/23/19	--	SPH Detected - No samples were collected.				
	05/16/19	--	SPH Detected - No samples were collected.				
	03/26/19	8260B	**0.8**	0.46	0.026	**0.9**	0.047
	11/27/18	--	SPH Detected - No samples were collected.				
	08/23/18	8260B	**1.3**	0.014	0.036	0.37	0.037
	05/03/18	8260B	**2.1**	0.05	0.078	0.58	0.041
	02/15/18	--	SPH Detected - No samples were collected.				
	11/30/17	--	SPH Detected - No samples were collected.				
	09/27/17	--	SPH Detected - No samples were collected.				
	06/14/17	--	SPH Detected - No samples were collected.				
	03/01/17	8260B	**2**	0.18	0.024	**0.96**	0.032
	11/03/16	8260B	**0.96**	0.012	0.014	**0.84**	0.03
	08/18/15	8260B	**0.76**	0.14	0.024	**1.6**	0.05
	06/04/15	8260B	**1.2**	0.058	0.017	**0.93**	0.054
	03/17/15	8260B	**0.82**	0.27	0.029	0.49	0.057
	11/21/14	8260B	**0.14**	0.2	0.0093	**1.3**	0.027
MKTF-38	12/03/19	8260B	*<0.001**	0.005	<0.001	<0.0015	<0.001
	08/20/19	8260B	*<0.001**	<0.001	<0.001	<0.0015	0.00056
	06/27/19	8260B	*<0.001**	<0.001	<0.001	<0.0015	<0.001
	05/14/19	8260B	*<0.001**	<0.001	<0.001	<0.0015	<0.001
	03/26/19	8260B	*<0.001**	<0.001	<0.001	<0.0015	0.00058
	11/20/18	8260B	0.0012	0.053	0.00023	0.00077	0.00066
	08/21/18	8260B	*<0.001**	<0.001	<0.001	<0.0015	0.00036
	05/03/18	8260B	0.0003	<0.001	<0.001	<0.0015	0.00078
	02/12/18	8260B	0.00018	0.00019	0.00013	0.00057	0.001
	11/30/17	8260B	0.0012	0.000074	<0.001	<0.0015	0.001
	09/28/17	8260B	0.002	<0.001	<0.001	<0.0015	0.00049
	06/21/17	8260B	0.00079	<0.001	<0.001	<0.0015	0.00068
	03/14/17	8260B	0.00017	<0.001	<0.001	<0.0015	0.00048
	11/01/16	8260B	0.00039	<0.001	<0.001	<0.0015	0.001
	09/13/16	8260B	0.00093	<0.001	<0.001	<0.0015	0.0006
	06/08/16	8260B	0.0012	<0.001	<0.001	<0.0015	0.0052
	02/29/16	8260B	0.00034	<0.001	<0.001	<0.0015	0.00059
	11/09/15	8260B	0.0013	<0.001	<0.001	<0.0015	0.0043
	08/24/15	8260B	0.0017	<0.001	<0.001	<0.0015	0.0073
	06/10/15	8260B	**0.0054**	<0.001	<0.001	<0.0015	0.0076
	03/16/15	8260B	**0.0092**	0.018	<0.001	<0.0015	0.006
	11/21/14	8260B	0.0028	<0.001	0.0029	0.0031	0.0074

8.17 MKTF WELLS
BTEX and MTBE Analytical Results

STANDARDS			PARAMETERS				
			Benzene (mg/L)	Toluene (mg/L)	Ethylbenzene (mg/L)	Total Xylenes (mg/L)	MTBE (mg/L)
WQCC 20 NMAC 6.2.3103 (DEC 2018)			**0.005**	**1**	**0.7**	**0.62**	**0.1**
40 CFR 141.61 MCL			0.005	1	0.7	10	NE
NMED Tap Water (JUNE 2019)			0.00455	1.09	0.0149	0.193	0.143
EPA RSL for Tap Water (NOVEMBER 2019)			0.0046	1.1	0.0015	0.19	0.14
WELL ID	**DATE SAMPLED**	**METHOD**					
MKTF-39	11/05/19	8260B	**0.01**	<0.001	0.041	0.0014	<0.001
	08/20/19	8260B	**0.0083**	<0.005	0.038	<0.0075	<0.005
	06/05/19	8260B	**0.0091**	0.0008	0.034	0.016	<0.001
	03/28/19	--	Located within barricaded area - not accessible to collect samples				
	11/20/18	8260B	**0.0084**	0.00065	0.03	0.0039	<0.001
	08/21/18	8260B	**0.0083**	<0.001	0.045	<0.0015	<0.001
	05/06/18	8260B	**0.012**	<0.005	0.056	<0.0075	<0.005
	02/08/18	8260B	**0.013**	0.0024	0.048	<0.0075	<0.005
	11/28/17	8260B	**0.013**	<0.005	0.05	<0.0075	<0.005
	09/28/17	8260B	**0.01**	<0.005	0.049	<0.0075	<0.005
	06/08/17	8260B	**0.012**	<0.005	0.057	<0.0075	<0.005
	03/14/17	8260B	**0.012**	<0.005	0.063	<0.0075	<0.005
	11/01/16	8260B	**0.013**	<0.005	0.059	<0.0075	<0.005
	09/13/16	8260B	**0.016**	<0.005	0.06	<0.0075	<0.005
	06/08/16	8260B	**0.016**	<0.001	0.061	0.0069	0.00036
	03/03/16	8260B	**0.019**	<0.001	0.064	0.00069	<0.001
	11/09/15	8260B	**0.021**	<0.001	0.064	<0.0015	<0.001
	08/23/15	8260B	**0.023**	<0.001	0.06	0.0016	<0.001
	06/10/15	8260B	**0.025**	<0.002	0.064	<0.003	<0.002
	03/16/15	8260B	**0.016**	<0.002	0.039	<0.003	<0.002
	11/18/14	8260B	**0.02**	<0.005	0.06	<0.0075	<0.005
MKTF-40	10/22/19	8260B	*<0.001**	<0.001	<0.001	<0.0015	0.0072
	08/22/19	8260B	*<0.001**	<0.001	<0.001	<0.0015	<0.001
	05/06/19	8260B	*<0.001**	<0.001	<0.001	<0.0015	<0.001
	02/20/19	8260B	*<0.001**	<0.001	<0.001	<0.0015	<0.001
	11/15/18	8260B	*<0.001**	<0.001	<0.001	<0.0015	<0.001
	08/17/18	8260B	*<0.001**	<0.001	<0.001	<0.0015	<0.001
	05/06/18	8260B	*<0.001**	<0.001	<0.001	<0.0015	<0.001
	02/08/18	8260B	0.00019	<0.001	<0.001	<0.0015	0.00053
	11/21/17	8260B	*<0.001**	<0.001	<0.001	<0.0015	<0.001
	09/25/17	8260B	*<0.001**	<0.001	<0.001	<0.0015	0.00046
	06/05/17	8260B	*<0.001**	<0.001	<0.001	<0.0015	0.00046
	03/07/17	8260B	*<0.001**	<0.001	<0.001	<0.0015	0.00041
	10/31/16	8260B	*<0.001**	0.00015	<0.001	<0.0015	0.0003
	09/08/16	8260B	*<0.001**	<0.001	<0.001	<0.0015	<0.001
	06/09/16	8260B	*<0.001**	<0.001	<0.001	<0.0015	0.00062
	02/23/16	8260B	*<0.001**	<0.001	<0.001	<0.0015	0.00061
	11/04/15	8260B	*<0.001**	<0.001	<0.001	<0.0015	<0.001
	08/21/15	8260B	*<0.001**	<0.001	<0.001	<0.0015	<0.001
	06/10/15	8260B	*<0.001**	<0.001	<0.001	<0.0015	<0.001
	03/11/15	8260B	*<0.001**	<0.001	<0.001	<0.0015	<0.001
	11/21/14	8260B	*<0.001**	<0.001	<0.001	<0.001	<0.001

8.17 MKTF WELLS
BTEX and MTBE Analytical Results

STANDARDS			PARAMETERS				
			Benzene (mg/L)	Toluene (mg/L)	Ethylbenzene (mg/L)	Total Xylenes (mg/L)	MTBE (mg/L)
WQCC 20 NMAC 6.2.3103 (DEC 2018)			**0.005**	**1**	**0.7**	**0.62**	**0.1**
40 CFR 141.61 MCL			0.005	1	0.7	10	NE
NMED Tap Water (JUNE 2019)			0.00455	1.09	0.0149	0.193	0.143
EPA RSL for Tap Water (NOVEMBER 2019)			0.0046	1.1	0.0015	0.19	0.14
WELL ID	**DATE SAMPLED**	**METHOD**					
MKTF-41	10/23/19	8260B	*<0.001**	<0.001	<0.001	<0.0015	0.0013
	08/22/19	8260B	*<0.001**	<0.001	<0.001	<0.0015	0.0012
	05/07/19	8260B	*<0.001**	<0.001	<0.001	<0.0015	0.00087
	02/13/19	8260B	*<0.001**	<0.001	<0.001	0.0013	0.00099
	11/15/18	8260B	*<0.001**	<0.001	<0.001	0.0012	0.0014
	08/29/18	8260B	*<0.001**	<0.001	<0.001	0.00082	0.0011
	05/09/18	8260B	*<0.001**	<0.001	<0.001	0.00047	0.0016
	02/07/18	8260B	*<0.001**	<0.001	<0.001	0.00036	0.0014
	11/27/17	8260B	*<0.001**	<0.001	<0.001	<0.0015	0.00081
	09/25/17	8260B	*<0.001**	<0.001	<0.001	<0.0015	0.0012
	06/06/17	8260B	*<0.001**	<0.001	<0.001	<0.0015	0.0012
	03/07/17	8260B	*<0.001**	<0.001	<0.001	<0.0015	0.0012
	10/31/16	8260B	*<0.001**	<0.001	<0.001	<0.0015	0.00091
	09/09/16	8260B	*<0.001**	<0.001	<0.001	<0.0015	0.00041
	06/09/16	8260B	*<0.001**	<0.001	<0.001	<0.0015	0.003
	02/24/16	8260B	*<0.001**	<0.001	<0.001	<0.0015	0.00068
	11/05/15	8260B	*<0.001**	<0.001	<0.001	<0.0015	<0.001
	08/21/15	8260B	*<0.001**	<0.001	<0.001	<0.0015	<0.001
	06/10/15	8260B	*<0.001**	<0.001	<0.001	<0.0015	<0.001
	03/12/15	8260B	*<0.001**	<0.001	<0.001	<0.0015	<0.001
	11/18/14	8260B	*<0.001**	<0.001	<0.001	<0.0015	<0.001
MKTF-42	10/23/19	8260B	**0.011**	<0.002	0.0011	0.021	0.0044
	08/22/19	8260B	**0.0096**	<0.002	0.0011	0.022	0.0041
	05/07/19	8260B	**0.007**	<0.002	0.00033	0.015	0.004
	02/13/19	8260B	**0.017**	0.00087	0.0031	0.051	0.0044
	11/15/18	8260B	**0.03**	0.0021	0.0087	0.11	0.005
	08/29/18	8260b	**0.011**	0.0007	0.0018	0.032	0.0043
	05/09/18	8260B	**0.0093**	0.00076	0.0016	0.031	0.0038
	02/07/18	8260B	**0.0084**	0.00056	0.0015	0.032	0.0033
	11/27/17	8260B	**0.0071**	0.0008	0.0026	0.037	0.002
	09/25/17	8260B	**0.0093**	0.00098	0.0039	0.046	0.002
	06/06/17	8260B	0.0049	0.00037	0.0011	0.021	0.0014
	03/07/17	8260B	0.0049	0.00044	0.0011	0.024	0.0011
	10/31/16	8260B	0.0034	0.00049	0.0019	0.027	0.00067
	09/09/16	8260B	0.004	0.00033	0.0018	0.025	0.00056
	06/09/16	8260B	*<0.001**	<0.001	<0.001	<0.0015	<0.001
	02/24/16	8260B	0.0041	0.0022	0.0011	0.026	<0.001
	11/05/15	8260B	0.0033	<0.001	0.0017	0.022	<0.001
	08/21/15	8260B	0.0028	<0.001	0.001	0.017	<0.001
	06/10/15	8260B	0.0016	<0.001	<0.001	0.011	<0.001
	03/11/15	8260B	0.0017	<0.001	<0.001	0.01	<0.001
	11/18/14	8260B	**0.012**	<0.01	<0.01	0.056	<0.01

8.17 MKTF WELLS
BTEX and MTBE Analytical Results

STANDARDS			PARAMETERS				
			Benzene (mg/L)	Toluene (mg/L)	Ethylbenzene (mg/L)	Total Xylenes (mg/L)	MTBE (mg/L)
WQCC 20 NMAC 6.2.3103 (DEC 2018)			**0.005**	**1**	**0.7**	**0.62**	**0.1**
40 CFR 141.61 MCL			0.005	1	0.7	10	NE
NMED Tap Water (JUNE 2019)			0.00455	1.09	0.0149	0.193	0.143
EPA RSL for Tap Water (NOVEMBER 2019)			0.0046	1.1	0.0015	0.19	0.14
WELL ID	**DATE SAMPLED**	**METHOD**					
MKTF-43	10/24/19	8260B	*<0.001**	<0.001	<0.001	<0.0015	<0.001
	08/22/19	8260B	0.00035	<0.01	<0.001	0.0007	<0.001
	05/08/19	8260B	*<0.001**	<0.001	<0.001	<0.0015	<0.001
	02/13/19	8260B	*<0.001**	<0.001	<0.001	<0.0015	<0.001
	11/15/18	8260B	*<0.001**	<0.001	<0.001	<0.0015	<0.001
	08/30/18	8260B	*<0.001**	<0.001	<0.001	<0.0015	<0.001
	05/09/18	8260B	*<0.001**	<0.001	<0.001	<0.0015	<0.001
	02/07/18	8260B	0.00018	<0.001	<0.001	<0.0015	<0.001
	11/27/17	8260B	*<0.001**	<0.001	<0.001	<0.0015	<0.001
	09/25/17	8260B	*<0.001**	<0.001	<0.001	<0.0015	<0.001
	06/06/17	8260B	*<0.001**	<0.001	<0.001	<0.0015	<0.001
	03/08/17	8260B	*<0.001**	<0.001	<0.001	<0.0015	<0.001
	10/31/16	8260B	*<0.001**	0.00013	<0.001	<0.0015	<0.001
	09/09/16	8260B	0.00041	<0.001	<0.001	<0.0015	<0.001
	06/09/16	8260B	*<0.001**	<0.001	<0.001	<0.0015	<0.001
	02/24/16	8260B	*<0.001**	<0.001	<0.001	<0.0015	<0.001
	11/05/15	8260B	*<0.001**	<0.001	<0.001	<0.0015	<0.001
	08/21/15	8260B	*<0.001**	<0.001	<0.001	<0.0015	<0.001
	06/10/15	8260B	*<0.001**	<0.001	<0.001	<0.0015	<0.001
	03/11/15	8260B	*<0.001**	<0.001	<0.001	<0.0015	<0.001
	11/18/14	8260B	*<0.001**	<0.001	<0.001	<0.0015	<0.001
MKTF-44	10/24/19	8260B	<0.001*	<0.001	<0.001	<0.0015	<0.001
	08/22/19	8260B	*<0.001**	<0.001	<0.001	<0.0015	<0.001
	05/08/19	8260B	*<0.001**	<0.001	<0.001	<0.0015	<0.001
	02/13/19	8260B	*<0.001**	<0.001	<0.001	<0.0015	<0.001
	11/15/18	8260B	*<0.001**	<0.001	<0.001	<0.0015	<0.001
	08/30/18	8260B	*<0.001**	<0.001	<0.001	<0.0015	<0.001
	05/10/18	8260B	*<0.001**	<0.001	<0.001	<0.0015	<0.001
	02/08/18	8260B	*<0.001**	<0.001	<0.001	<0.0015	<0.001
	11/28/17	8260B	*<0.001**	<0.001	<0.001	<0.0015	<0.001
	09/25/17	8260B	*<0.001**	<0.001	<0.001	<0.0015	<0.001
	06/05/17	8260B	*<0.001**	<0.001	<0.001	<0.0015	<0.001
	03/08/17	8260B	*<0.001**	<0.001	<0.001	<0.0015	<0.001
	11/01/16	8260B	*<0.001**	<0.001	<0.001	<0.0015	<0.001
	09/09/16	8260B	*<0.001**	<0.001	<0.001	<0.0015	<0.001
	06/09/16	8260B	*<0.001**	<0.001	<0.001	<0.0015	<0.001
	02/24/16	8260B	*<0.001**	<0.001	<0.001	<0.0015	<0.001
	11/09/15	8260B	*<0.001**	<0.001	<0.001	<0.0015	<0.001
	08/17/15	8260B	*<0.001**	<0.001	<0.001	<0.0015	<0.001
	06/10/15	8260B	<0.002	<0.002	<0.002	<0.003	<0.002
	03/12/15	8260B	<0.002	<0.002	<0.002	<0.003	<0.002
	11/21/14	8260B	<0.002	<0.002	<0.002	<0.003	<0.002
MKTF-45			SPH Detected - No samples were collected.				
MKTF-46	12/03/19	8260B	*<0.001**	<0.001	<0.001	<0.0015	<0.001
MKTF-47	12/03/19	8260B	*<0.001**	<0.001	<0.001	<0.0015	<0.001
MKTF-48	12/03/19	8260B	**0.05**	<0.001	0.0055	0.00063	<0.001

8.17 MKTF WELLS
BTEX and MTBE Analytical Results

STANDARDS			PARAMETERS				
			Benzene (mg/L)	Toluene (mg/L)	Ethylbenzene (mg/L)	Total Xylenes (mg/L)	MTBE (mg/L)
WQCC 20 NMAC 6.2.3103 (DEC 2018)			**0.005**	**1**	**0.7**	**0.62**	**0.1**
40 CFR 141.61 MCL			0.005	1	0.7	10	NE
NMED Tap Water (JUNE 2019)			0.00455	1.09	0.0149	0.193	0.143
EPA RSL for Tap Water (NOVEMBER 2019)			0.0046	1.1	0.0015	0.19	0.14
WELL ID	**DATE SAMPLED**	**METHOD**					
MKTF-49	12/03/19	8260B	**18**	**8.2**	**1.3**	**6.6**	0.014
MKTF-50	12/03/19	8260B	**11**	0.064	**1.2**	0.17	0.0027

DEFINITIONS

NE = Not established

NA = Not analyzed

Bold and highlighted values represent values above the applicable standards

STANDARDS

WQCC 20 NMAC 6.2.3103 - Standards for Ground Water of 10,000 mg/l TDS Concentration or Less.

a) Human Health Standards; b) Other Standards for Domestic Water

40 CFR 141.61 Maximum Contaminant Levels for Organic Contaminants

NMED Risk Assessment Guidance for Investigations and Remediations Table A-1

EPA Regional Screening Level (RSL) Summary Table

NOTES

Wells marked in red were not sampled because of SPH, well was dry, or well was inaccessible.

Items notes with a * and italics have a detection limit greater than or equal to the applicable standard.

8.17.1 MKTF WELLS
DRO/GRO/MRO and General Chemistry Analytical Results

			PARAMETERS							
STANDARDS			DRO (mg/L)	GRO (mg/L)	MRO (mg/L)	Fluoride (mg/L)	Chloride (mg/L)	Nitrite (mg/L)	Nitrate (mg/L)	Sulfate (mg/L)
WQCC 20 NMAC 6.2.3103 (DEC 2018)			NE	NE	NE	**1.6**	**250.0**	**1**	**10**	**600.0**
40 CFR 141.62 MCL			NE	NE	NE	4	NE	1	10	NE
NMED Tap Water (JUNE 2019)			NE	NE	NE	1.18	NE	1.97	31.60	NE
EPA RSL for Tap Water (NOVEMBER 2019)			NE	NE	NE	0.8	NE	2	32	NE
NMED SSG (JUNE 2019)			**0.0167**	**0.0101**	**0.0858**	NE	NE	NE	NE	NE
WELL ID	DATE SAMPLED	METHOD								
MKTF-1	Second half 2016-2019	--	SPH Detected - No samples were collected.							
	02/24/16	8015D/300.0	**3**	**51**	*<5.0**	<0.1	**470**	**2.6**	2.6	0.55
	11/04/15	8015D/300.0	**200**	**36**	*<5.0**	1.1	**450**	*<1.0**	<1.0	<0.5
	08/21/15	8015D/300.0	**34**	**26**	*<5.0**	0.78	**460**	*<1.0**	<1.0	<2.5
	06/09/15	8015D	**110**	**31**	*<50**	NA	NA	NA	NA	NA
	03/11/15	8015D	**370**	**31**	*<50**	NA	NA	NA	NA	NA
	06/06/14	8015D/300.0	**510**	**50**	*<50**	0.6	**400**	*<1.0**	<1.0	0.58
MKTF-2	11/19/19	8015D/300.0	**0.65**	**2.4**	*<2.5**	0.98	**1900**	*<2.0**	<0.5	330
	08/23/19	8015D/300.0	**3.1**	**3.9**	*<5.0**	0.95	**2000**	*<2.0**	<0.5	150
	05/06/19	8015D/300.0	**3.5**	**5.3**	*<5.0**	1.3	**1600**	<0.5	<0.5	61
	03/28/19	8015D/300.0	**3.8**	**4.1**	*<5.0**	1.2	**1400**	*<1.0**	<1.0	52
	11/18/18	8015D/300.0	**2.9**	**18**	*<5.0**	2.3	**570**	0.18	<0.5	5.6
	08/20/18	8015D/300.0	**1.3**	**7.8**	*<5.0**	**2.1**	**510**	<0.5	<0.5	11
	05/01/18	8015D/300.0	**3.2**	**9.1**	*<5.0**	**2.3**	**520**	<0.5	<0.5	15
	02/06/18	8015D/300.0	**2.8**	**7.7**	*<5.0**	**2.3**	**520**	*<1.0**	<1.0	20
	11/20/17	8015D/300.0	**2.7**	**12**	*<5.0**	**2.4**	**540**	*<1.0**	<1.0	18
	10/03/17	8015D/300.0	**1.5**	**9.3**	*<5.0**	**1.8**	**460**	*<1.0**	<1.0	20
	03/16/17	8015D/300.0	**2.7**	**14**	*<5.0**	**2.7**	**400**	<0.5	<0.5	16
	10/28/16	8015D/300.0	**1.4**	**6.1**	*<5.0**	**2.7**	**380**	*<1.0**	<1.0	40
	09/07/16	8015D/300.0	**1.5**	**6.2**	*<5.0**	**2.3**	**410**	*<1.0**	<1.0	48
	06/10/16	8015D/300.0	**1.2**	**5.2**	*<5.0**	**2.7**	**390**	*<1.0**	<1.0	50
	02/24/16	8015D/300.0	**1**	**1.2**	*<5.0**	**1.8**	**520**	**8.8**	8.8	160
	11/04/15	8015D/300.0	**1**	**2.5**	*<5.0**	**2.5**	**360**	*<1.0**	<1.0	49
	08/21/15	8015D/300.0	*<1.0**	**2**	*<5.0**	1.2	**550**	**6.2**	6.2	130
	06/09/15	8015D	*<1.0**	**3.5**	*<5.0**	NA	NA	NA	NA	NA
	03/11/15	8015D	*<1.0**	**1.3**	*<5.0**	NA	NA	NA	NA	NA
	11/14/14	8015D/300.0	*<1.0**	**0.61**	*<5.0**	<1.0	**830**	*<1.0**	<1.0	230
	09/18/14	8015D	**1.7**	**6.8**	*<5.0**	NA	NA	NA	NA	NA
	06/06/14	8015D/300.0	*<1.0**	**1.5**	*<5.0**	0.76	**750**	*<1.0**	<1.0	200
	04/08/14	8015D	*<1.0**	**0.67**	*<5.0**	NA	NA	NA	NA	NA
	10/28/13	8015D	*<1.0**	**3.8**	*<5.0**	NA	NA	NA	NA	NA

8.17.1 MKTF WELLS
DRO/GRO/MRO and General Chemistry Analytical Results

STANDARDS			PARAMETERS							
			DRO (mg/L)	GRO (mg/L)	MRO (mg/L)	Fluoride (mg/L)	Chloride (mg/L)	Nitrite (mg/L)	Nitrate (mg/L)	Sulfate (mg/L)
WQCC 20 NMAC 6.2.3103 (DEC 2018)			NE	NE	NE	**1.6**	**250.0**	**1**	**10**	**600.0**
40 CFR 141.62 MCL			NE	NE	NE	4	NE	1	10	NE
NMED Tap Water (JUNE 2019)			NE	NE	NE	1.18	NE	1.97	31.60	NE
EPA RSL for Tap Water (NOVEMBER 2019)			NE	NE	NE	0.8	NE	2	32	NE
NMED SSG (JUNE 2019)			**0.0167**	**0.0101**	**0.0858**	NE	NE	NE	NE	NE
WELL ID	**DATE SAMPLED**	**METHOD**								
MKTF-3			SPH Detected - No samples were collected.							
MKTF-4	10/30/19	8015D/300.0	**0.73**	**10**	*<2.5**	1.2	210	<0.5	<0.5	2.9
	08/21/19	8015D/300.0	**4.3**	**6.4**	*<5.0**	0.81	220	<0.5	0.12	16
	05/13/19	8015D/300.0	**5.4**	**9.6**	*<5.0**	1	**260**	<0.5	<0.5	5.6
	03/26/19	8015D/300.0	**5**	**10**	*<5.0**	1	240	<0.5	<0.5	4.7
	11/20/18	8015D/300.0	**4.5**	**7.6**	*<5.0**	1.1	210	0.093	<0.5	9.6
	09/04/18	8015D/300.0	**4.7**	**12**	*<5.0**	1	200	<0.5	0.083	5.5
	05/02/18	8015D/300.0	**4.9**	**12**	*<5.0**	<0.5	200	<0.5	<0.5	9.8
	02/14/18	8015D/300.0	**5**	**9.6**	*<5.0**	0.93	220	<0.5	<0.5	8.6
	11/28/17	8015D/300.0	**5.6**	**16**	*<5.0**	1.1	210	*<1.0**	<1.0	2.3
	09/26/17	8015D/300.0	**6.6**	**13**	*<5.0**	0.87	200	*<1.0**	<1.0	0.7
	06/08/17	8015D/300.0	**5.7**	**10**	*<5.0**	0.67	210	*<1.0**	<1.0	5.3
	03/02/17	8015D/300.0	**5.7**	**12**	*<5.0**	0.99	220	*<1.0**	<1.0	2.8
	11/02/16	8015D/300.0	**4.1**	**9.8**	*<5.0**	1	180	<0.5	<0.5	6.1
	09/11/16	8015D/300.0	**5.3**	**10**	*<5.0**	0.74	220	*<1.0**	<1.0	4.1
	06/09/16	8015D/300.0	**3.9**	**9**	*<5.0**	0.79	250	*<1.0**	<1.0	7
	02/29/16	8015D/300.0	**3.6**	**9.2**	*<5.0**	0.97	250	*<1.0**	<1.0	3.2
	11/03/15	8015D/300.0	**3**	**8.6**	*<5.0**	0.96	**300**	*<1.0**	<1.0	3
	08/18/15	8015D/300.0	**3.7**	**6.8**	*<5.0**	0.86	**300**	<0.1	<0.1	4.2
	06/04/15	8015D	**2.3**	**6.2**	*<5.0**	NA	NA	NA	NA	NA
	03/16/15	8015D	**1.9**	**4.8**	*<5.0**	NA	NA	NA	NA	NA
	11/13/14	8015D/300.0	**2**	**4.2**	*<5.0**	<1.0	250	*<1.0**	<1.0	26
	09/15/14	8015D	**1.5**	**3.4**	*<5.0**	NA	NA	NA	NA	NA
	06/04/14	8015D/300.0	**2.9**	**8.2**	*<5.0**	0.7	0.19	*<1.0**	<1.0	6.8
	04/11/14	8015D	**4.5**	**9.4**	*<5.0**	NA	NA	NA	NA	NA
MKTF-5			SPH Detected - No samples were collected.							
MKTF-6			SPH Detected - No samples were collected.							
MKTF-7			SPH Detected - No samples were collected.							
MKTF-8			SPH Detected - No samples were collected.							

8.17.1 MKTF WELLS
DRO/GRO/MRO and General Chemistry Analytical Results

STANDARDS			PARAMETERS							
			DRO (mg/L)	GRO (mg/L)	MRO (mg/L)	Fluoride (mg/L)	Chloride (mg/L)	Nitrite (mg/L)	Nitrate (mg/L)	Sulfate (mg/L)
WQCC 20 NMAC 6.2.3103 (DEC 2018)			NE	NE	NE	**1.6**	**250.0**	**1**	**10**	**600.0**
40 CFR 141.62 MCL			NE	NE	NE	4	NE	1	10	NE
NMED Tap Water (JUNE 2019)			NE	NE	NE	1.18	NE	1.97	31.60	NE
EPA RSL for Tap Water (NOVEMBER 2019)			NE	NE	NE	0.8	NE	2	32	NE
NMED SSG (JUNE 2019)			**0.0167**	**0.0101**	**0.0858**	NE	NE	NE	NE	NE
WELL ID	**DATE SAMPLED**	**METHOD**								
MKTF-9	11/18/19	8015D/300.0	**1.0**	**10**	*<2.5**	0.3	220	<0.5	<0.5	25
	08/28/19	8015D/300.0	**3.9**	**12**	*<5.0**	0.51	230	<0.5	<0.5	12
	05/13/19	8015D/300.0	**3.1**	**8.4**	*<5.0**	0.47	250	<0.5	<0.5	8.1
	03/26/19	8015D/300.0	**2.5**	**8.2**	*<5.0**	0.5	240	<0.5	<0.5	10
	11/28/18	8015D/300.0	**1.8**	**9.1**	*<5.0**	<0.5	**260**	0.11	<0.5	24
	09/04/18	8015D/300.0	**2.4**	**11**	*<5.0**	0.52	**260**	<0.5	<0.5	17
	05/02/18	8015D/300.0	**2.6**	**8.2**	*<5.0**	0.34	250	<0.5	0.21	22
	02/14/18	8015D/300.0	**2.2**	**8.7**	*<5.0**	0.4	220	<0.5	<0.5	27
	11/28/17	8015D/300.0	**2.6**	**11**	*<5.0**	0.45	220	*<1.0**	<1.0	27
	09/28/17	8015D/300.0	**4.2**	**13**	*<5.0**	0.35	180	<0.5	<0.5	14
	06/12/17	8015D/300.0	**2.4**	**11**	*<5.0**	<0.5	180	*<1.0**	<1.0	14
	03/15/17	8015D/300.0	**3.9**	**12**	*<5.0**	0.33	180	<0.1	<0.1	28
	11/02/16	8015D/300.0	**1.6**	**7.8**	*<5.0**	0.46	150	<0.5	<0.5	71
	09/11/16	8015D/300.0	**2.3**	**6.7**	*<5.0**	0.26	160	*<1.0**	<1.0	57
	06/09/16	8015D/300.0	**1.7**	**7.8**	*<5.0**	0.35	170	*<1.0**	<1.0	81
	02/29/16	8015D/300.0	**2.5**	**7.4**	*<5.0**	0.47	170	*<1.0**	<1.0	70
	11/03/15	8015D/300.0	**5.3**	**9.8**	*<5.0**	0.46	170	<0.1	<0.1	110
	08/18/15	8015D/300.0	**4.7**	**7.1**	*<5.0**	0.43	170	<0.1	<0.1	130
	06/04/15	8015D	**1.8**	**4.1**	*<5.0**	NA	NA	NA	NA	NA
	03/16/15	8015D	*<1.0**	**3.3**	*<5.0**	NA	NA	NA	NA	NA
	11/14/14	8015D/300.0	**2.1**	**4.4**	*<5.0**	<1.0	180	*<1.0**	<1.0	140
	09/18/14	8015D	**1.4**	**5.6**	*<5.0**	NA	NA	NA	NA	NA
	06/05/14	8015D/300.0	**2.7**	**6.2**	*<5.0**	0.43	180	*<1.0**	<1.0	78
	04/14/14	8015D	**3.6**	**5.7**	*<5.0**	NA	NA	NA	NA	NA

8.17.1 MKTF WELLS
DRO/GRO/MRO and General Chemistry Analytical Results

			PARAMETERS							
STANDARDS			DRO (mg/L)	GRO (mg/L)	MRO (mg/L)	Fluoride (mg/L)	Chloride (mg/L)	Nitrite (mg/L)	Nitrate (mg/L)	Sulfate (mg/L)
WQCC 20 NMAC 6.2.3103 (DEC 2018)			NE	NE	NE	**1.6**	**250.0**	**1**	**10**	**600.0**
40 CFR 141.62 MCL			NE	NE	NE	4	NE	1	10	NE
NMED Tap Water (JUNE 2019)			NE	NE	NE	1.18	NE	1.97	31.60	NE
EPA RSL for Tap Water (NOVEMBER 2019)			NE	NE	NE	0.8	NE	2	32	NE
NMED SSG (JUNE 2019)			**0.0167**	**0.0101**	**0.0858**	NE	NE	NE	NE	NE
WELL ID	DATE SAMPLED	METHOD								
MKTF-10	10/30/19	8015D/300.0	**0.35**	**40**	*<2.5**	0.76	**1000**	<0.5	<0.5	<2.5
	08/22/19	8015D/300.0	**3**	**35**	*<5.0**	0.91	**960**	<0.5	0.1	<2.5
	05/13/19	8015D/300.0	**3.5**	**48**	*<5.0**	1	**460**	<0.5	<0.5	<2.5
	03/26/19	8015D/300.0	**2.6**	**50**	*<5.0**	1.1	**390**	<0.5	<0.5	0.4
	11/20/18	8015D/300.0	**2.8**	**53**	*<5.0**	<0.5	**320**	0.12	<0.5	<2.5
	09/04/18	8015D/300.0	**2.5**	**57**	*<5.0**	0.85	**340**	<0.5	<0.5	<2.5
	05/02/18	8015D/300.0	**3.7**	**100**	*<5.0**	<0.5	**380**	<0.5	<0.5	<2.5
	02/14/18	8015D/300.0	**2.6**	**74**	*<5.0**	<0.5	**390**	<0.5	<0.5	<2.5
	11/28/17	8015D/300.0	**3.5**	**83**	*<5.0**	1.1	**370**	*<1.0**	<1.0	<2.5
	09/28/17	8015D/300.0	**3.6**	**74**	*<5.0**	<0.5	**330**	<0.5	<0.5	0.55
	06/08/17	8015D/300.0	**3.5**	**100**	*<5.0**	0.49	**310**	*<1.0**	<1.0	0.25
	03/02/17	8015D/300.0	**5.3**	**110**	*<5.0**	0.35	**350**	*<1.0**	<1.0	0.3
	11/02/16	8015D/300.0	**3.8**	**100**	*<5.0**	<0.05	230	<0.5	<0.5	<2.5
	09/11/16	8015D/300.0	**6**	**110**	*<5.0**	*<2.0**	240	*<1.0**	<1.0	<2.5
	06/09/16	8015D/300.0	**8**	**110**	*<5.0**	*<2.0**	**260**	*<1.0**	<1.0	0.4
	02/29/16	8015D/300.0	**14**	**110**	*<5.0**	*<2.0**	**280**	*<1.0**	<1.0	<2.5
	11/03/15	8015D/300.0	**8**	**100**	*<5.0**	*<2.0**	**380**	<0.5	<0.5	<2.5
	08/18/15	8015D/300.0	**55**	**130**	*<5.0**	*<5.0**	**390**	<0.5	<0.5	<2.5
	06/04/15	8015D	**23**	**79**	*<5.0**	NA	NA	NA	NA	NA
	03/16/15	8015D	**32**	**80**	*<5.0**	NA	NA	NA	NA	NA
	11/14/14	8015D/300.0	**74**	**84**	*<50**	**270**	**260**	*<2.0**	<2.0	<5.0
	09/18/14	8015D	**7.7**	**88**	*<5.0**	NA	NA	NA	NA	NA
	6/6/2014 [1]	8015D	**5.5**	**64**	*<5.0**	NA	NA	NA	NA	NA
	04/11/14	8015D	**5.9**	**88**	*<5.0**	NA	NA	NA	NA	NA

8.17.1 MKTF WELLS
DRO/GRO/MRO and General Chemistry Analytical Results

			PARAMETERS							
STANDARDS			DRO (mg/L)	GRO (mg/L)	MRO (mg/L)	Fluoride (mg/L)	Chloride (mg/L)	Nitrite (mg/L)	Nitrate (mg/L)	Sulfate (mg/L)
WQCC 20 NMAC 6.2.3103 (DEC 2018)			NE	NE	NE	**1.6**	**250.0**	**1**	**10**	**600.0**
40 CFR 141.62 MCL			NE	NE	NE	4	NE	1	10	NE
NMED Tap Water (JUNE 2019)			NE	NE	NE	1.18	NE	1.97	31.60	NE
EPA RSL for Tap Water (NOVEMBER 2019)			NE	NE	NE	0.8	NE	2	32	NE
NMED SSG (JUNE 2019)			**0.0167**	**0.0101**	**0.0858**	NE	NE	NE	NE	NE
WELL ID	DATE SAMPLED	METHOD								
MKTF-11	10/30/19	8015D/300.0	**0.18**	**32**	*<2.5**	1.4	**750**	<0.5	<0.5	4.4
	08/21/19	8015D/300.0	**1.4**	**35**	*<5.0**	1.3	**620**	0.57	<0.5	1.8
	05/13/19	8015D/300.0	**1.5**	**28**	*<5.0**	<0.5	**760**	<0.5	<0.5	6.3
	03/26/19	8015D/300.0	**1.4**	**38**	*<5.0**	<0.5	**730**	<0.5	<0.5	3.5
	11/20/18	8015D/300.0	**1.7**	**41**	*<5.0**	<0.5	**1200**	0.35	<0.5	1.7
	09/04/18	8015D/300.0	**1.6**	**53**	*<5.0**	0.75	**1200**	<0.5	<0.5	2
	05/02/18	8015D/300.0	**2.5**	**72**	*<5.0**	<0.5	**850**	<0.5	0.21	1.4
	02/08/18	8015D/300.0	**2.2**	**69**	*<5.0**	<0.5	**740**	0.21	0.21	1.5
	11/28/17	8015D/300.0	**2.1**	**59**	*<5.0**	<0.5	**860**	0.27	0.27	1.2
	09/26/17	8015D/300.0	**2.8**	**63**	*<5.0**	<0.5	**820**	*<1.0**	<1.0	<2.5
	06/08/17	8015D/300.0	**1.8**	**30**	*<5.0**	*<2.0**	**630**	*<1.0**	<1.0	4.3
	03/02/17	8015D/300.0	**1.7**	**27**	*<5.0**	<0.5	**650**	*<1.0**	<1.0	3.4
	11/02/16	8015D/300.0	**1.6**	**27**	*<5.0**	<0.5	**900**	<0.5	<0.5	2.2
	09/11/16	8015D/300.0	**1.7**	**29**	*<5.0**	*<2.0**	**880**	*<1.0**	<1.0	2.2
	06/09/16	8015D/300.0	**1.4**	**39**	*<5.0**	*<2.0**	**1000**	*<1.0**	<1.0	2.2
	02/29/16	8015D/300.0	**1.5**	**42**	*<5.0**	<0.5	**1600**	*<1.0**	<1.0	0.58
	11/03/15	8015D/300.0	**2.9**	**71**	*<5.0**	*<2.0**	**740**	<0.5	<0.5	<2.5
	08/18/15	8015D/300.0	**1.6**	**36**	*<5.0**	*<2.0**	**1200**	*<2.0**	<0.1	1.2
	06/04/15	8015D	**2.8**	**71**	*<5.0**	NA	NA	NA	NA	NA
	03/16/15	8015D	**2.6**	**55**	*<5.0**	NA	NA	NA	NA	NA
	11/13/14	8015D/300.0	**1.8**	**35**	*<5.0**	**6.5**	**780**	*<1.0**	<1.0	<5.0
	09/15/14	8015D	**1.8**	**57**	*<5.0**	NA	NA	NA	NA	NA
	06/05/14	8015D/300.0	**2.6**	**48**	*<5.0**	**7**	**480**	*<1.0**	<1.0	11
	04/11/14	8015D	**2.7**	**53**	*<5.0**	NA	NA	NA	NA	NA
MKTF-12			SPH Detected - No samples were collected.							
MKTF-13	10/28/19	8015D/300.0	**7.3**	**23**	*<2.5**	0.38	**290**	<0.5	<0.5	0.59
	08/20/19	--	SPH Detected - No samples were collected.							
	05/09/19	8015D/300.0	**63**	**19**	*<5.0**	<0.5	**400**	<0.5	<0.5	1.1
	03/26/19	8015D/300.0	**8.1**	**27**	*<5.0**	<0.5	**390**	*<1.0**	<1.0	0.75
	11/28/18	8015D/300.0	**4.5**	**24**	*<5.0**	<0.5	220	0.1	<0.5	<2.5
	08/30/18	8015D/300.0	**5.5**	**26**	*<5.0**	0.28	210	<0.5	0.12	<2.5
	05/10/18	8015D/300.0	**30**	**28**	*<5.0**	0.29	190	<0.5	0.21	1.2
	03/15/17	8015D/300.0	**48**	**28**	*<5.0**	0.27	120	<0.5	<0.5	<2.5

8.17.1 MKTF WELLS
DRO/GRO/MRO and General Chemistry Analytical Results

			PARAMETERS							
STANDARDS			DRO (mg/L)	GRO (mg/L)	MRO (mg/L)	Fluoride (mg/L)	Chloride (mg/L)	Nitrite (mg/L)	Nitrate (mg/L)	Sulfate (mg/L)
WQCC 20 NMAC 6.2.3103 (DEC 2018)			NE	NE	NE	**1.6**	**250.0**	**1**	**10**	**600.0**
40 CFR 141.62 MCL			NE	NE	NE	4	NE	1	10	NE
NMED Tap Water (JUNE 2019)			NE	NE	NE	1.18	NE	1.97	31.60	NE
EPA RSL for Tap Water (NOVEMBER 2019)			NE	NE	NE	0.8	NE	2	32	NE
NMED SSG (JUNE 2019)			**0.0167**	**0.0101**	**0.0858**	NE	NE	NE	NE	NE
WELL ID	DATE SAMPLED	METHOD								
MKTF-14			SPH Detected - No samples were collected.							
MKTF-15	10/30/19	--	SPH Detected - No samples were collected.							
	08/21/19	--	SPH Detected - No samples were collected.							
	05/13/19	8015D/300.0	**9.7**	**72**	*<5.0**	<0.5	**3900**	*<2.0**	<0.5	0.44
	03/25/19	--	SPH Detected - No samples were collected.							
	11/19/18	--	SPH Detected - No samples were collected.							
	08/28/18	8015D/300.0	**2.7**	**78**	*<5.0**	*<2.0**	**6400**	*<2.0**	<2.0	1.5
	05/02/18	8015D/300.0	**4**	**97**	*<5.0**	<0.5	**7200**	*<2.0**	<0.5	1.3
	11/28/17	8015D/300.0	**5.3**	**130**	*<5.0**	*<2.0**	**6000**	**1.8**	1.8	0.56
	06/08/17	8015D/300.0	**5.9**	**150**	*<5.0**	*<2.0**	**4300**	*<4.0**	<4.0	0.74
	03/02/17	8015D/300.0	**8.8**	**140**	*<5.0**	*<2.0**	**3400**	*<2.0**	<2.0	1
	11/02/16	8015D/300.0	**6.2**	**110**	*<5.0**	<0.05	**2800**	*<2.0**	<0.5	<2.5
	09/11/16	8015D/300.0	**17**	NA	*<5.0**	*<2.0**	**3100**	*<4.0**	<4.0	<2.5
	06/09/16	--	SPH Detected - No samples were collected.							
	03/16/16	--	SPH Detected - No samples were collected.							
	1Q & 2Q 2015	--	SPH Detected - No samples were collected.							
	11/14/14	--	SPH Detected - No samples were collected.							
	09/17/14	8015D	**17**	**88**	*<5.0**	NA	NA	NA	NA	NA
	06/05/14	8015D/300.0	**10**	**57**	*<5.0**	*<2.0**	**5200**	*<4.0**	<4.0	1.2
	04/10/14	8015D	**4.1**	**71**	*<5.0**	NA	NA	NA	NA	NA
	11/01/13	8015D	**2.4**	**65**	*<5.0**	NA	NA	NA	NA	NA

8.17.1 MKTF WELLS
DRO/GRO/MRO and General Chemistry Analytical Results

			PARAMETERS							
STANDARDS			DRO (mg/L)	GRO (mg/L)	MRO (mg/L)	Fluoride (mg/L)	Chloride (mg/L)	Nitrite (mg/L)	Nitrate (mg/L)	Sulfate (mg/L)
WQCC 20 NMAC 6.2.3103 (DEC 2018)			NE	NE	NE	**1.6**	**250.0**	**1**	**10**	**600.0**
40 CFR 141.62 MCL			NE	NE	NE	4	NE	1	10	NE
NMED Tap Water (JUNE 2019)			NE	NE	NE	1.18	NE	1.97	31.60	NE
EPA RSL for Tap Water (NOVEMBER 2019)			NE	NE	NE	0.8	NE	2	32	NE
NMED SSG (JUNE 2019)			**0.0167**	**0.0101**	**0.0858**	NE	NE	NE	NE	NE
WELL ID	DATE SAMPLED	METHOD								
MKTF-16	10/30/19	8015D/300.0	**0.24**	**33**	*<2.5**	0.81	**1700**	<0.5	<0.5	<2.5
	8/22 & 8/30/19	8015D/300.0	**3.6**	**20**	*<5.0**	0.67	**1800**	*<2.0**	<0.5	<2.5
	05/14/19	8015D/300.0	**3.4**	**30**	**16**	1.2	**960**	<0.5	<0.5	0.68
	02/20/19	8015D/300.0	**2.2**	**48**	*<5.0**	1.3	**590**	<0.5	<0.5	0.41
	11/29/18	8015D/300.0	**2.6**	**34**	*<5.0**	1.4	**620**	<0.5	<0.5	0.64
	08/31/18	8015D/300.0	**3.3**	**50**	*<5.0**	1.5	**650**	*<1.0**	<1.0	1.4
	05/11/18	8015D/300.0	**2.9**	**47**	*<5.0**	0.25	**840**	0.33	0.099	1.2
	02/15/18	8015D/300.0	**2.4**	**8.4**	*<5.0**	**4.5**	**760**	<0.5	0.13	57
	11/29/17	8015D/300.0	**4**	**70**	*<5.0**	0.63	**700**	*<1.0**	<1.0	<2.5
	09/26/17	8015D/300.0	**4.7**	**78**	*<5.0**	0.48	**810**	*<1.0**	<1.0	0.64
	06/08/17	8015D/300.0	**4.3**	**60**	*<5.0**	1.4	**800**	*<1.0**	<1.0	0.68
	03/14/17	8015D/300.0	**5.9**	**85**	*<5.0**	0.95	**580**	*<2.0**	<2.0	0.14
	11/03/16	8015D/300.0	**3.3**	**70**	*<5.0**	1.2	**380**	<0.5	<0.5	<2.5
	09/12/16	8015D/300.0	**3.5**	**62**	*<5.0**	1.3	**390**	*<1.0**	<1.0	0.36
	06/09/16	8015D	**3**	**69**	*<5.0**	NA	NA	NA	NA	NA
	02/29/16	8015D/300.0	**2.6**	**73**	*<5.0**	1	**710**	*<1.0**	<1.0	0.068
	11/03/15	8015D/300.0	**3.1**	**91**	*<5.0**	0.88	**1000**	*<1.0**	<1.0	<2.5
	08/23/15	8015D/300.0	**3.7**	**83**	*<5.0**	0.66	**1700**	*<1.0**	<1.0	<2.5
	06/08/15	8015D	**4.3**	**69**	*<5.0**	NA	NA	NA	NA	NA
	03/16/15	8015D	**2.9**	**61**	*<5.0**	NA	NA	NA	NA	NA
	11/18/14	8015D/300.0	**2.7**	**53**	*<5.0**	1.5	**700**	<0.5	<0.5	<2.5
	09/17/14	8015D	**4.6**	**66**	*<5.0**	NA	NA	NA	NA	NA
	06/05/14	8015D/300.0	**5.7**	**71**	*<5.0**	1.1	**540**	*<1.0**	<1.0	<2.5
	04/10/14	8015D	**3.5**	**67**	*<5.0**	NA	NA	NA	NA	NA
	11/19/13	8015D	**4.2**	**68**	*<5.0**	NA	NA	NA	NA	NA

8.17.1 MKTF WELLS
DRO/GRO/MRO and General Chemistry Analytical Results

			PARAMETERS							
STANDARDS			DRO (mg/L)	GRO (mg/L)	MRO (mg/L)	Fluoride (mg/L)	Chloride (mg/L)	Nitrite (mg/L)	Nitrate (mg/L)	Sulfate (mg/L)
WQCC 20 NMAC 6.2.3103 (DEC 2018)			NE	NE	NE	**1.6**	**250.0**	**1**	**10**	**600.0**
40 CFR 141.62 MCL			NE	NE	NE	4	NE	1	10	NE
NMED Tap Water (JUNE 2019)			NE	NE	NE	1.18	NE	1.97	31.60	NE
EPA RSL for Tap Water (NOVEMBER 2019)			NE	NE	NE	0.8	NE	2	32	NE
NMED SSG (JUNE 2019)			**0.0167**	**0.0101**	**0.0858**	NE	NE	NE	NE	NE
WELL ID	DATE SAMPLED	METHOD								
MKTF-17	10/29/19	8015D/300.0	**0.7**	**78**	*<2.5**	0.82	240	<0.5	<0.5	6.2
	08/20/19	8015D/300.0	**3.3**	**7.6**	*<5.0**	0.74	140	<0.5	<0.5	14
	05/09/19	8015D/300.0	**7.6**	**9.1**	**5**	0.71	100	<0.5	<0.5	15
	03/26/19	8015D/300.0	**1.9**	**7**	*<5.0**	0.7	130	<0.5	<0.5	48
	11/28/18	8015D/300.0	**1.6**	**3**	*<5.0**	0.9	110	0.075	<0.5	120
	08/24/18	8015D/300.0	*<1.0**	**4.7**	*<5.0**	0.55	110	<0.5	<0.5	160
	05/04/18	8015D/300.0	**1.4**	**7.1**	*<5.0**	0.26	130	<0.1	0.054	68
	02/16/18	8015D/300.0	**1.36**	**3.7**	*<5.0**	0.74	100	<0.5	<0.5	52
	12/01/17	8015D/300.0	**1.1**	**2.5**	*<5.0**	0.91	92	*<1.0**	<1.0	97
	09/26/17	8015D/300.0	**2**	**4.3**	*<5.0**	0.76	83	*<1.0**	<1.0	22
	06/14/17	8015D/300.0	**2.2**	**4**	*<5.0**	0.81	70	*<1.0**	<1.0	66
	03/15/17	8015D/300.0	**2.4**	**3.5**	*<5.0**	0.73	61	<0.1	<0.1	43
	11/08/16	8015D/300.0	**1.3**	**4.5**	*<5.0**	0.77	64	*<1.0**	<1.0	45
	09/13/16	8015D/300.0	**1.6**	**7.5**	*<5.0**	0.83	70	0.58	0.58	45
	06/10/16	8015D	**2.1**	**9.2**	*<5.0**	NA	NA	NA	NA	NA
	02/26/16	8015D/300.0	*<1.0**	**1.6**	*<5.0**	0.54	76	*<1.0**	<1.0	180
	11/03/15	8015D/300.0	**1.5**	**2.5**	*<5.0**	0.61	78	<0.1	<0.1	120
	08/18/15	8015D/300.0	**1.1**	**1.7**	<0.005	0.5	74	<0.1	<0.01	160
	06/08/15	8015D	**1.3**	**0.77**	*<5.0**	NA	NA	NA	NA	NA
	03/12/15	8015D	*<1.0**	**0.8**	*<5.0**	NA	NA	NA	NA	NA
	11/18/14	8015D/300.0	**1.4**	**1.2**	*<5.0**	0.66	84	<0.1	<0.1	200
	09/18/14	8015D	**1.5**	**3.3**	*<5.0**	NA	NA	NA	NA	NA
	6/6/2014: 6/16/14	8015D/300.0	**4.2**	**8.3**	*<5.0**	0.61	98	<0.1	<0.1	60
	04/09/14	8015D	**2.6**	**8.6**	*<5.0**	NA	NA	NA	NA	NA
	11/19/13	8015D	**5.8**	**17**	*<5.0**	NA	NA	NA	NA	NA

8.17.1 MKTF WELLS
DRO/GRO/MRO and General Chemistry Analytical Results

			PARAMETERS							
STANDARDS			DRO (mg/L)	GRO (mg/L)	MRO (mg/L)	Fluoride (mg/L)	Chloride (mg/L)	Nitrite (mg/L)	Nitrate (mg/L)	Sulfate (mg/L)
WQCC 20 NMAC 6.2.3103 (DEC 2018)			NE	NE	NE	**1.6**	**250.0**	**1**	**10**	**600.0**
40 CFR 141.62 MCL			NE	NE	NE	4	NE	1	10	NE
NMED Tap Water (JUNE 2019)			NE	NE	NE	1.18	NE	1.97	31.60	NE
EPA RSL for Tap Water (NOVEMBER 2019)			NE	NE	NE	0.8	NE	2	32	NE
NMED SSG (JUNE 2019)			**0.0167**	**0.0101**	**0.0858**	NE	NE	NE	NE	NE
WELL ID	DATE SAMPLED	METHOD								
MKTF-18	10/29/19	8015D/300.0	**0.2**	**0.73**	*<2.5**	0.76	220	<0.5	<0.5	0.57
	08/19/19	8015D/300.0	SPH Detected - No samples were collected.							
	05/16/19	8015D/300.0	**3.3**	**0.69**	*<5.0**	0.59	190	<0.5	<0.5	<2.5
	03/26/19	8015D/300.0	**1.7**	**1**	*<5.0**	0.68	210	<0.5	<0.5	0.48
	11/28/18	8015D/300.0	*<1.0**	**0.12**	*<5.0**	0.73	220	0.1	<0.5	<2.5
	08/24/18	8015D/300.0	**1.6**	**0.97**	*<5.0**	0.51	230	<0.5	<0.5	<2.5
	05/04/18	8015D/300.0	**2.4**	**0.8**	*<5.0**	0.49	230	<0.1	0.051	0.41
	02/16/18	8015D/300.0	**2.8**	**0.85**	*<5.0**	0.61	220	<0.5	<0.5	<2.5
	06/14/17	8015D/300.0	**7.1**	**0.83**	*<5.0**	<0.5	190	*<1.0**	<1.0	0.53
	03/01/17	8015D/300.0	**2.7**	**0.81**	*<5.0**	0.62	180	*<1.0**	<1.0	0.22
	11/08/16	8015D/300.0	**1.7**	**0.6**	*<5.0**	0.62	160	*<1.0**	<1.0	0.23
	09/13/16	8015D/300.0	**2.2**	**0.56**	*<5.0**	0.67	170	*<1.0**	<1.0	0.34
	06/10/16	8015D/300.0	**1.9**	**0.71**	*<5.0**	0.63	180	*<1.0**	<1.0	0.21
	02/26/16	8015D/300.0	**0.3**	**0.79**	*<5.0**	0.64	160	*<1.0**	<1.0	0.26
	11/03/15	8015D/300.0	**2.5**	**1.3**	*<5.0**	0.61	160	<0.1	<0.1	<0.5
	08/18/15	8015D/300.0	**34**	**1.3**	*<5.0**	0.55	170	<0.1	<0.1	<0.5
	06/08/15	8015D	**3.3**	**1.4**	*<5.0**	NA	NA	NA	NA	NA
	03/17/15	8015D	**5.4**	**1.8**	*<5.0**	NA	NA	NA	NA	NA
	11/18/14	8015D/300.0	**2.3**	**1.4**	*<5.0**	0.68	160	<0.5	<0.5	<2.5
	09/18/14	8015D	**3.1**	**1.4**	*<5.0**	NA	NA	NA	NA	NA
	06/06/14	8015D/300.0	**7.8**	**2.2**	*<5.0**	0.65	170	*<1.0**	<1.0	0.95
	04/14/14	8015D	**4.4**	**2.2**	*<5.0**	NA	NA	NA	NA	NA
	11/19/13	8015D	**11**	**4**	*<5.0**	NA	NA	NA	NA	NA

8.17.1 MKTF WELLS
DRO/GRO/MRO and General Chemistry Analytical Results

			PARAMETERS							
STANDARDS			DRO (mg/L)	GRO (mg/L)	MRO (mg/L)	Fluoride (mg/L)	Chloride (mg/L)	Nitrite (mg/L)	Nitrate (mg/L)	Sulfate (mg/L)
WQCC 20 NMAC 6.2.3103 (DEC 2018)			NE	NE	NE	**1.6**	**250.0**	**1**	**10**	**600.0**
40 CFR 141.62 MCL			NE	NE	NE	4	NE	1	10	NE
NMED Tap Water (JUNE 2019)			NE	NE	NE	1.18	NE	1.97	31.60	NE
EPA RSL for Tap Water (NOVEMBER 2019)			NE	NE	NE	0.8	NE	2	32	NE
NMED SSG (JUNE 2019)			**0.0167**	**0.0101**	**0.0858**	NE	NE	NE	NE	NE
WELL ID	DATE SAMPLED	METHOD								
MKTF-19	10/28/19	8015D/300.0	**1**	**17**	*<2.5**	<0.5	130	<0.5	<0.5	0.5
	08/19/19	8015D/300.0	**13**	**18**	*<5.0**	<0.5	140	<0.5	<0.5	<2.5
	05/09/19	8015D/300.0	**11**	**19**	*<5.0**	<0.5	140	<0.5	<0.5	0.31
	03/26/19	8015D/300.0	**8.7**	**17**	*<5.0**	<0.5	140	<0.5	<0.5	0.34
	11/28/18	8015D/300.0	**7.8**	**15**	*<5.0**	<0.5	140	0.084	<0.5	<2.5
	08/24/18	8015D/300.0	**7.9**	**22**	*<5.0**	<0.5	120	<0.5	<0.5	<2.5
	05/04/18	8015D/300.0	**9.3**	**23**	*<5.0**	<0.5	130	<0.5	<0.5	1.2
	02/16/18	8015D/300.0	**11**	**16**	*<5.0**	<0.5	120	<0.5	<0.5	<2.5
	12/01/17	8015D/300.0	**13**	**24**	*<5.0**	<0.5	120	0.14	0.14	0.67
	09/26/17	8015D/300.0	**11**	**29**	*<5.0**	<0.5	120	*<1.0**	<1.0	0.77
	06/14/17	8015D/300.0	**11**	**23**	*<5.0**	<0.5	130	*<1.0**	<1.0	0.73
	03/15/17	8015D/300.0	**14**	**25**	*<5.0**	0.098	130	<0.1	<0.1	0.52
	11/08/16	8015D/300.0	**6.7**	**26**	*<5.0**	0.28	110	*<1.0**	<1.0	0.89
	09/13/16	8015D/300.0	**7.3**	**25**	*<5.0**	0.34	130	*<1.0**	<1.0	0.57
	06/10/16	8015D/300.0	**7.2**	**21**	*<5.0**	0.17	150	*<1.0**	<1.0	0.28
	02/25/16	8015D/300.0	**7.8**	**22**	*<5.0**	0.24	150	*<1.0**	<1.0	<2.5
	11/03/15	8015D/300.0	**13**	**34**	*<5.0**	<0.5	130	<0.5	<0.5	<2.5
	08/18/15	8015D/300.0	**27**	**20**	*<5.0**	0.18	140	<0.1	0.17	<0.5
	06/08/15	8015D	**9.9**	**19**	*<5.0**	NA	NA	NA	NA	NA
	03/12/15	8015D	**9.3**	**14**	*<5.0**	NA	NA	NA	NA	NA
	11/18/14	8015D/300.0	**13**	**20**	*<5.0**	<0.5	110	<0.5	<0.5	<2.5
	09/24/14	8015D	**61**	**16**	*<5.0**	NA	NA	NA	NA	NA
	04/09/14	8015D	**17**	**18**	*<5.0**	NA	NA	NA	NA	NA
	11/05/13	8015D	**7.2**	**10**	*<5.0**	NA	NA	NA	NA	NA

8.17.1 MKTF WELLS
DRO/GRO/MRO and General Chemistry Analytical Results

			PARAMETERS							
STANDARDS			DRO (mg/L)	GRO (mg/L)	MRO (mg/L)	Fluoride (mg/L)	Chloride (mg/L)	Nitrite (mg/L)	Nitrate (mg/L)	Sulfate (mg/L)
WQCC 20 NMAC 6.2.3103 (DEC 2018)			NE	NE	NE	**1.6**	**250.0**	**1**	**10**	**600.0**
40 CFR 141.62 MCL			NE	NE	NE	4	NE	1	10	NE
NMED Tap Water (JUNE 2019)			NE	NE	NE	1.18	NE	1.97	31.60	NE
EPA RSL for Tap Water (NOVEMBER 2019)			NE	NE	NE	0.8	NE	2	32	NE
NMED SSG (JUNE 2019)			**0.0167**	**0.0101**	**0.0858**	NE	NE	NE	NE	NE
WELL ID	DATE SAMPLED	METHOD								
MKTF-20	11/05/19	8015D/300.0	**1.5**	**7**	*<2.5**	<0.5	140	<0.5	<0.5	1.7
	08/21/19	8015D/300.0	**5.1**	**28**	*<5.0**	<0.5	**3300**	**3.3**	<0.5	2.8
	05/14/19	8015D/300.0	**5.4**	**25**	*<5.0**	1.2	**3400**	*<2.0**	<0.5	36
	02/20/19	8015D/300.0	**9.8**	**7.3**	*<5.0**	<0.5	**760**	<0.5	<0.5	11
	11/29/18	8015D/300.0	**6.9**	**17**	*<5.0**	**4.2**	**460**	<0.5	<0.5	4.3
	08/31/18	8015D/300.0	**11**	**70**	*<5.0**	**3.3**	**560**	<0.5	<0.5	8.4
	05/11/18	8015D/300.0	**9.7**	**76**	*<5.0**	**2.4**	**1600**	0.63	0.097	18
	02/15/18	8015D/300.0	**5.1**	**79**	*<5.0**	0.55	**3100**	*<2.0**	<0.5	15
	11/29/17	8015D/300.0	**22**	**91**	*<5.0**	**2.1**	**420**	*<1.0**	<1.0	1
	09/26/17	8015D/300.0	**3.9**	**78**	*<5.0**	**2.2**	**590**	*<1.0**	<1.0	73
	06/12/17	8015D/300.0	**5.3**	**95**	*<5.0**	**2**	**580**	*<1.0**	<1.0	0.64
	03/14/17	8015D/300.0	**16**	**90**	*<5.0**	1	**1100**	<0.5	<0.5	5
	11/03/16	8015D/300.0	**9.4**	**65**	*<5.0**	**2.6**	**1500**	<0.5	<0.5	13
	09/12/16	8015D/300.0	**8.7**	**72**	*<5.0**	**2.1**	**370**	*<1.0**	<1.0	1.2
	06/09/16	8015D/300.0	**9**	**63**	*<5.0**	**3.1**	**450**	*<1.0**	<1.0	10
	03/01/16	8015D	**6.9**	**73**	*<5.0**	NA	NA	NA	NA	NA
	06/08/15	8015D	**9.9**	**30**	*<5.0**	NA	NA	NA	NA	NA
	03/16/15	8015D	**4.5**	**37**	*<5.0**	NA	NA	NA	NA	NA
	11/18/14	8015D/300.0	**24**	**45**	*<5.0**	0.87	82	<0.5	<0.5	16
	04/11/14	8015D	**16**	**120**	*<5.0**	NA	NA	NA	NA	NA

8.17.1 MKTF WELLS
DRO/GRO/MRO and General Chemistry Analytical Results

			PARAMETERS							
STANDARDS			DRO (mg/L)	GRO (mg/L)	MRO (mg/L)	Fluoride (mg/L)	Chloride (mg/L)	Nitrite (mg/L)	Nitrate (mg/L)	Sulfate (mg/L)
WQCC 20 NMAC 6.2.3103 (DEC 2018)			NE	NE	NE	**1.6**	**250.0**	**1**	**10**	**600.0**
40 CFR 141.62 MCL			NE	NE	NE	4	NE	1	10	NE
NMED Tap Water (JUNE 2019)			NE	NE	NE	1.18	NE	1.97	31.60	NE
EPA RSL for Tap Water (NOVEMBER 2019)			NE	NE	NE	0.8	NE	2	32	NE
NMED SSG (JUNE 2019)			**0.0167**	**0.0101**	**0.0858**	NE	NE	NE	NE	NE
WELL ID	DATE SAMPLED	METHOD								
MKTF-21	11/05/19	8015D/300.0	**2.7**	**27**	*<2.5**	**2.4**	**2300**	<0.5	<0.5	19
	08/22/19	8015D/300.0	**7.4**	**17**	*<5.0**	<0.5	230	<0.5	<0.5	6.2
	05/14/19	8015D/300.0	**9.4**	**8.5**	*<5.0**	<0.5	**540**	<0.5	<0.5	6.9
	02/20/19	8015D/300.0	**20**	**40**	*<5.0**	<0.5	**4600**	**1.6**	<0.5	**880**
	11/29/18	8015D/300.0	**3.8**	**7.2**	*<5.0**	0.89	**340**	<0.5	<0.5	8.6
	08/31/18	8015D/300.0	**2.9**	**22**	*<5.0**	0.43	**330**	<0.5	<0.5	7.1
	05/11/18	8015D/300.0	**3.9**	**17**	*<5.0**	<0.5	190	<0.5	0.12	4.3
	02/15/18	8015D/300.0	**3.2**	**12**	*<5.0**	<0.5	210	<0.5	<0.5	23
	11/28/17	8015D/300.0	**2.6**	**25**	*<5.0**	<0.5	210	*<1.0**	<1.0	7
	09/26/17	8015D/300.0	**2**	**24**	*<5.0**	<0.5	230	*<1.0**	<1.0	2
	06/21/17	8015D/300.0	**6.2**	**30**	*<5.0**	<0.5	**310**	*<1.0**	<1.0	1.1
	03/14/17	8015D/300.0	**4**	**37**	*<5.0**	<0.5	**440**	<0.5	<0.5	3.4
	11/03/16	8015D/300.0	**3.4**	**34**	*<5.0**	0.91	110	<0.5	<0.5	3.9
	09/12/16	8015D/300.0	**3.9**	**28**	*<5.0**	<0.5	81	*<1.0**	<1.0	19
	06/09/16	8015D	**3.9**	**32**	*<5.0**	NA	NA	NA	NA	NA
	03/01/16	8015D	**3.6**	**24**	*<5.0**	NA	NA	NA	NA	NA
	06/10/15	--	Not enough water to collect for this set.							
	03/16/15	8015D	**3.8**	**16**	*<5.0**	NA	NA	NA	NA	NA
	04/11/14	8015D	**27**	**78**	*<5.0**	NA	NA	NA	NA	NA

8.17.1 MKTF WELLS
DRO/GRO/MRO and General Chemistry Analytical Results

			PARAMETERS							
STANDARDS			DRO (mg/L)	GRO (mg/L)	MRO (mg/L)	Fluoride (mg/L)	Chloride (mg/L)	Nitrite (mg/L)	Nitrate (mg/L)	Sulfate (mg/L)
WQCC 20 NMAC 6.2.3103 (DEC 2018)			NE	NE	NE	**1.6**	**250.0**	**1**	**10**	**600.0**
40 CFR 141.62 MCL			NE	NE	NE	4	NE	1	10	NE
NMED Tap Water (JUNE 2019)			NE	NE	NE	1.18	NE	1.97	31.60	NE
EPA RSL for Tap Water (NOVEMBER 2019)			NE	NE	NE	0.8	NE	2	32	NE
NMED SSG (JUNE 2019)			**0.0167**	**0.0101**	**0.0858**	NE	NE	NE	NE	NE
WELL ID	DATE SAMPLED	METHOD								
MKTF-22	10/24/19	8015D/300.0	**0.28**	**9**	*<2.5**	0.41	190	<0.5	<0.5	2.9
	08/20/19	8015D/300.0	**2.4**	**8.2**	*<5.0**	0.4	200	<0.5	<0.5	4.7
	05/09/19	8015D/300.0	**2.6**	**11**	*<5.0**	0.39	170	<0.5	<0.5	13
	03/26/19	8015D/300.0	**2.9**	**10**	*<5.0**	0.38	150	<0.5	<0.5	7.6
	11/28/18	8015D/300.0	**2**	**11**	*<5.0**	<0.5	130	0.079	<0.5	5.8
	08/30/18	8015D/300.0	**3.1**	**11**	*<5.0**	0.35	110	<0.5	1.7	3.8
	05/10/18	8015D/300.0	**3.5**	**11**	*<5.0**	0.27	110	<0.1	0.15	5.8
	02/08/18	8015D/300.0	**2.9**	**10**	*<5.0**	0.24	110	*<1.0**	<1.0	5.2
	11/28/17	8015D/300.0	**2.4**	**13**	*<5.0**	0.34	100	*<1.0**	<1.0	3.3
	10/03/17	8015D/300.0	**2.5**	**13**	*<5.0**	0.28	110	*<1.0**	<1.0	7.6
	06/08/17	8015D/300.0	**3**	**14**	*<5.0**	0.25	100	*<1.0**	<1.0	6
	03/08/17	8015D/300.0	**3**	**23**	*<5.0**	0.33	100	*<1.0**	<1.0	2
	11/01/16	8015D/300.0	**2.1**	**26**	*<5.0**	0.41	100	<0.1	<0.1	3.3
	09/10/16	8015D/300.0	**2.7**	**17**	*<5.0**	0.23	98	*<1.0**	<1.0	4.1
	06/10/16	8015D/300.0	**2.5**	**27**	*<5.0**	0.37	99	*<1.0**	<1.0	4.2
	02/25/16	8015D/300.0	**2.7**	**24**	*<5.0**	0.37	95	*<1.0**	<1.0	4.7
	11/09/15	8015D/300.0	**1.6**	**14**	*<5.0**	0.41	100	<0.1	<0.1	17
	08/20/15	8015D/300.0	*<1.0**	**9.3**	*<5.0**	<0.5	120	*<1.0**	<1.0	48
	06/09/15	8015D	**2.5**	**15**	*<5.0**	NA	NA	NA	NA	NA
	03/12/15	8015D	**2.5**	**13**	*<5.0**	NA	NA	NA	NA	NA
	11/17/14	8015D/300.0	**1.6**	**6.8**	*<5.0**	0.38	96	**7.1**	7.1	19
	09/23/14	--	Dry - No samples were collected.							
	04/10/14	8015D	**2.6**	**10**	*<5.0**	NA	NA	NA	NA	NA
	11/19/13	8015D	**2.1**	**6.5**	*<5.0**	NA	NA	NA	NA	NA

8.17.1 MKTF WELLS
DRO/GRO/MRO and General Chemistry Analytical Results

STANDARDS			PARAMETERS							
			DRO (mg/L)	GRO (mg/L)	MRO (mg/L)	Fluoride (mg/L)	Chloride (mg/L)	Nitrite (mg/L)	Nitrate (mg/L)	Sulfate (mg/L)
WQCC 20 NMAC 6.2.3103 (DEC 2018)			NE	NE	NE	**1.6**	**250.0**	**1**	**10**	**600.0**
40 CFR 141.62 MCL			NE	NE	NE	4	NE	1	10	NE
NMED Tap Water (JUNE 2019)			NE	NE	NE	1.18	NE	1.97	31.60	NE
EPA RSL for Tap Water (NOVEMBER 2019)			NE	NE	NE	0.8	NE	2	32	NE
NMED SSG (JUNE 2019)			**0.0167**	**0.0101**	**0.0858**	NE	NE	NE	NE	NE
WELL ID	**DATE SAMPLED**	**METHOD**								
MKTF-23	10/29/19	8015D/300.0	**2200**	**55**	*<120**	0.75	**440**	<0.5	<0.5	1.7
	08/20/19	--	SPH Detected - No samples were collected.							
	05/09/19	--	SPH Detected - No samples were collected.							
	03/26/19	8015D/300.0	**15**	**60**	*<5.0**	<0.5	**390**	<0.5	<0.5	2.6
	06/10/16	8015D/300.0	**710**	**38**	*<50**	0.75	240	*<1.0**	<1.0	0.36
	02/25/16	8015D/300.0	**56**	**32**	*<5.0**	0.69	240	*<1.0**	<1.0	0.38
	11/9 & 10/2015	8015D/300.0	**71**	**34**	*<5.0**	1	250	<0.1	<0.1	14
	08/21/15	8015D/300.0	**35**	**29**	*<5.0**	0.57	**300**	*<1.0**	<1.0	<2.5
	06/09/15	8015D	**23**	**32**	*<5.0**	NA	NA	NA	NA	NA
	03/12/15	8015D	**14**	**35**	*<5.0**	NA	NA	NA	NA	NA
	11/17/14	8015D/300.0	**7.7**	**26**	*<5.0**	0.43	**390**	*<1.0**	<1.0	5.9
	09/23/14	8015D	**14**	**23**	*<5.0**	NA	NA	NA	NA	NA
	04/10/14	--	SPH Detected - No samples were collected.							
	11/05/13	8015D	**1.1**	**12**	*<5.0**	NA	NA	NA	NA	NA

8.17.1 MKTF WELLS
DRO/GRO/MRO and General Chemistry Analytical Results

			PARAMETERS							
STANDARDS			DRO (mg/L)	GRO (mg/L)	MRO (mg/L)	Fluoride (mg/L)	Chloride (mg/L)	Nitrite (mg/L)	Nitrate (mg/L)	Sulfate (mg/L)
WQCC 20 NMAC 6.2.3103 (DEC 2018)			NE	NE	NE	**1.6**	**250.0**	**1**	**10**	**600.0**
40 CFR 141.62 MCL			NE	NE	NE	4	NE	1	10	NE
NMED Tap Water (JUNE 2019)			NE	NE	NE	1.18	NE	1.97	31.60	NE
EPA RSL for Tap Water (NOVEMBER 2019)			NE	NE	NE	0.8	NE	2	32	NE
NMED SSG (JUNE 2019)			**0.0167**	**0.0101**	**0.0858**	NE	NE	NE	NE	NE
WELL ID	DATE SAMPLED	METHOD								
MKTF-24	10/23/19	8015D/300.0	*<0.40**	**17**	*<2.5**	0.15	**660**	<0.5	<0.5	20
	08/23/19	8015D/300.0	**0.94**	**15**	*<5.0**	<0.5	**800**	0.8	<0.5	34
	05/06/19	8015D/300.0	**0.65**	**8.6**	*<5.0**	<0.5	**1000**	<0.5	<0.5	42
	02/25/19	--	Well not sampled.							
	11/15/18	8015D/300.0	**1.5**	**16**	*<5.0**	<0.5	**520**	<0.5	<0.5	27
	08/20/18	8015D/300.0	**1.4**	**23**	*<5.0**	<0.5	**560**	<0.5	<0.5	30
	05/01/18	8015D/300.0	**1.4**	**23**	*<5.0**	<0.1	**500**	*<2.0**	0.17	29
	02/06/18	8015D/300.0	**1.1**	**21**	*<5.0**	<0.5	**430**	*<1.0**	<1.0	30
	11/20/17	8015D/300.0	**1**	**28**	*<5.0**	<0.5	**560**	*<1.0**	<1.0	34
	10/03/17	8015D/300.0	**0.56**	**10**	*<5.0**	<0.5	**800**	*<1.0**	<1.0	64
	06/05/17	8015D/300.0	**1.8**	**23**	*<5.0**	<0.1	**620**	*<1.0**	<1.0	43
	03/29/17	8015D/300.0	**0.74**	**8.2**	*<5.0**	<0.1	**800**	*<1.0**	<1.0	59
	10/28/16	8015D/300.0	**1.1**	**30**	*<5.0**	0.078	**440**	*<1.0**	<1.0	46
	09/07/16	8015D/300.0	**1.2**	**19**	*<5.0**	<0.1	**630**	*<1.0**	<1.0	51
	06/08/16	8015D/300.0	*<1.0**	**14**	*<5.0**	0.097	**700**	*<1.0**	<1.0	60
	02/22/16	8015D/300.0	**1.5**	**29**	*<5.0**	0.058	**650**	*<1.0**	<1.0	50
	11/04/15	8015D/300.0	*<1.0**	**10**	*<5.0**	<0.1	**850**	*<1.0**	<1.0	68
	08/20/15	8015D/300.0	*<1.0**	**9.5**	*<5.0**	<0.5	**850**	*<1.0**	<1.0	72
	06/10/15	8015D	*<1.0**	**9.8**	*<5.0**	NA	NA	NA	NA	NA
	03/11/15	8015D	*<1.0**	**9.2**	*<5.0**	NA	NA	NA	NA	NA
	11/14/14	8015D/300.0	*<1.0**	**5.7**	*<5.0**	<1.0	**630**	*<1.0**	<1.0	72
	09/24/14	8015D	*<1.0**	**6.3**	*<5.0**	NA	NA	NA	NA	NA
	04/08/14	8015D	*<1.0**	**4.2**	*<5.0**	NA	NA	NA	NA	NA
	11/01/13	8015D	**1.5**	**8.4**	*<5.0**	NA	NA	NA	NA	NA

8.17.1 MKTF WELLS
DRO/GRO/MRO and General Chemistry Analytical Results

			PARAMETERS							
STANDARDS			DRO (mg/L)	GRO (mg/L)	MRO (mg/L)	Fluoride (mg/L)	Chloride (mg/L)	Nitrite (mg/L)	Nitrate (mg/L)	Sulfate (mg/L)
WQCC 20 NMAC 6.2.3103 (DEC 2018)			NE	NE	NE	**1.6**	**250.0**	**1**	**10**	**600.0**
40 CFR 141.62 MCL			NE	NE	NE	4	NE	1	10	NE
NMED Tap Water (JUNE 2019)			NE	NE	NE	1.18	NE	1.97	31.60	NE
EPA RSL for Tap Water (NOVEMBER 2019)			NE	NE	NE	0.8	NE	2	32	NE
NMED SSG (JUNE 2019)			**0.0167**	**0.0101**	**0.0858**	NE	NE	NE	NE	NE
WELL ID	DATE SAMPLED	METHOD								
MKTF-25	10/23/19	8015D/300.0	<0.4*	**3**	*<2.5**	<0.5	**1400**	<0.5	<0.5	73
	08/27/19	8015D/300.0	*<1.0**	**1.7**	*<5.0**	<0.5	**1100**	0.88	<0.5	68
	05/06/19	8015D/300.0	**0.4**	**3.6**	*<5.0**	<0.5	**860**	<0.5	<0.5	52
	02/14/19	--	Well not sampled.							
	11/15/18	8015D/300.0	*<1.0**	**5**	*<5.0**	<0.5	**630**	<0.5	<0.5	50
	08/17/18	8015D/300.0	**1**	**17**	*<5.0**	<0.5	**540**	<0.5	<0.5	23
	05/06/18	8015D/300.0	**1.1**	**12**	*<5.0**	<0.1	**500**	*<1.0**	<1.0	28
	02/05/18	8015D/300.0	**0.58**	**16**	*<5.0**	<0.5	**520**	*<1.0**	<1.0	27
	11/21/17	8015D/300.0	**0.78**	**17**	*<5.0**	<0.5	**550**	<0.5	<0.5	29
	09/25/17	8015D/300.0	**1**	**16**	*<5.0**	0.25	**500**	*<1.0**	<1.0	31
	06/05/17	8015D/300.0	**1.2**	**8.4**	*<5.0**	0.054	**420**	*<1.0**	<1.0	130
	03/29/17	8015D/300.0	**0.95**	**7.8**	*<5.0**	0.095	**380**	*<1.0**	<1.0	100
	11/01/16	8015D/300.0	**0.88**	**10**	*<5.0**	0.052	**530**	*<1.0**	<1.0	36
	09/09/16	8015D/300.0	**0.94**	**7.1**	*<5.0**	0.073	**560**	*<1.0**	<1.0	34
	06/09/16	8015D/300.0	**0.89**	**13**	*<5.0**	0.18	**680**	*<1.0**	<1.0	35
	02/23/16	8015D/300.0	**1.1**	**14**	*<5.0**	0.12	**670**	*<1.0**	<1.0	31
	11/05/15	8015D/300.0	**1.2**	**12**	*<5.0**	<0.1	**750**	*<1.0**	<1.0	35
	08/21/15	8015D/300.0	**1.1**	**8.7**	*<5.0**	<0.5	**870**	*<1.0**	<1.0	31
	06/10/15	8015D	*<1.0**	**11**	*<5.0**	NA	NA	NA	NA	NA
	03/11/15	8015D	**1.1**	**10**	*<5.0**	NA	NA	NA	NA	NA
	11/14/14	8015D/300.0	*<1.0**	**4.8**	*<5.0**	<1.0	**880**	*<1.0**	<1.0	35
	09/23/14	8015D	*<1.0**	**5.8**	*<5.0**	NA	NA	NA	NA	NA
	04/08/14	8015D	**1.2**	**6.9**	*<5.0**	NA	NA	NA	NA	NA
MKTF-26			SPH Detected - No samples were collected.							
	06/09/16	8015D/300.0	*<1.0**	**1.5**	*<5.0**	0.15	**2300**	*<1.0**	<1.0	230
	02/22/16	8015D/300.0	*<1.0**	**1.5**	*<5.0**	0.2	**2000**	**11**	**11**	210
	11/04/15	8015D/300.0	*<1.0**	**2.3**	*<5.0**	0.69	**1000**	*<1.0**	<1.0	94
	08/20/15	8015D/300.0	*<1.0**	**1.5**	*<5.0**	<0.5	**1800**	*<1.0**	<1.0	220
	06/10/15	8015D	*<1.0**	**2.5**	*<5.0**	NA	NA	NA	NA	NA
	03/11/15	8015D	*<1.0**	**2.5**	*<5.0**	NA	NA	NA	NA	NA
	11/14/14	8015D/300.0	*<1.0**	**2**	*<5.0**	<1.0	**1500**	*<2.0**	<2.0	160
	09/24/14	8015D	*<1.0**	**2.8**	*<5.0**	NA	NA	NA	NA	NA
	04/08/14	8015D	*<1.0**	**0.2**	*<5.0**	NA	NA	NA	NA	NA
	11/01/13	8015D	*<1.0**	**1.7**	*<5.0**	NA	NA	NA	NA	NA

8.17.1 MKTF WELLS
DRO/GRO/MRO and General Chemistry Analytical Results

			PARAMETERS							
STANDARDS			DRO (mg/L)	GRO (mg/L)	MRO (mg/L)	Fluoride (mg/L)	Chloride (mg/L)	Nitrite (mg/L)	Nitrate (mg/L)	Sulfate (mg/L)
WQCC 20 NMAC 6.2.3103 (DEC 2018)			NE	NE	NE	**1.6**	**250.0**	**1**	**10**	**600.0**
40 CFR 141.62 MCL			NE	NE	NE	4	NE	1	10	NE
NMED Tap Water (JUNE 2019)			NE	NE	NE	1.18	NE	1.97	31.60	NE
EPA RSL for Tap Water (NOVEMBER 2019)			NE	NE	NE	0.8	NE	2	32	NE
NMED SSG (JUNE 2019)			**0.0167**	**0.0101**	**0.0858**	NE	NE	NE	NE	NE
WELL ID	DATE SAMPLED	METHOD								
MKTF-27	10/23/19	8015D/300.0	*<0.40**	*<0.05**	*<2.5**	1.4	**2900**	<0.5	1.2	570
	08/21/19	8015D/300.0	*<1.0**	0.035	*<5.0**	0.7	**3400**	**3.2**	2.8	**770**
	05/06/19	8015D/300.0	*<1.0**	*<0.05**	*<5.0**	0.63	**4000**	*<2.0**	5.5	**980**
	03/28/19	8015D/300.0	**0.48**	*<0.05**	*<5.0**	<0.5	**3500**	**8.1**	8.1	**1200**
	11/15/18	8015D/300.0	*<1.0**	*<0.05**	*<5.0**	0.83	**3100**	*<2.0**	0.64	270
	08/20/18	8015D/300.0	*<1.0**	0.033	*<5.0**	<0.5	**4000**	*<2.0**	0.61	300
	05/01/18	8015D/300.0	*<1.0**	0.028	*<5.0**	<0.5	**4800**	*<2.0**	2.3	450
	02/06/18	8015D/300.0	*<1.0**	0.014	*<5.0**	0.84	**2300**	**1.7**	1.7	200
	11/20/17	8015D/300.0	*<1.0**	0.036	*<5.0**	<0.5	**3200**	0.51	0.51	290
	10/03/17	8015D/300.0	*<1.0**	0.013	*<5.0**	<0.5	**2900**	*<2.0**	<2.0	290
	06/05/17	8015D/300.0	*<1.0**	0.03	*<5.0**	0.27	**3800**	**2.5**	2.5	410
	03/29/17	8015D/300.0	*<1.0**	0.022	*<5.0**	<0.1	**5000**	**3.7**	3.7	600
	10/28/16	8015D/300.0	*<1.0**	0.034	*<5.0**	0.94	**2200**	**1.4**	1.4	410
	09/07/16	8015D/300.0	*<1.0**	0.068	*<5.0**	0.29	**2600**	*<2.0**	<2.0	400
	06/08/16	8015D/300.0	<0.001	0.084	<0.005	1.2	**2800**	**1.1**	1.1	350
	02/22/16	8015D/300.0	*<1.0**	*<0.05**	*<5.0**	0.8	**2400**	1	1	360
	11/04/15	8015D/300.0	*<1.0**	*<0.05**	*<5.0**	0.8	**2700**	*<1.0**	<1.0	450
	08/20/15	8015D/300.0	*<1.0**	0.064	*<5.0**	0.81	**2700**	*<1.0**	<1.0	330
	06/09/15	8015D	*<1.0**	*<0.05**	*<5.0**	NA	NA	NA	NA	NA
	03/11/15	8015D	*<1.0**	*<0.05**	*<5.0**	NA	NA	NA	NA	NA
	11/14/14	8015D/300.0	*<1.0**	*<0.05**	*<5.0**	<1.0	**2500**	*<2.0**	<2.0	470
	09/24/14	8015D	*<1.0**	*<0.05**	*<5.0**	NA	NA	NA	NA	NA
	04/08/14	8015D	*<1.0**	<0.01	*<5.0**	NA	NA	NA	NA	NA
	11/19/13	8015D	*<1.0**	*<0.05**	*<5.0**	NA	NA	NA	NA	NA

8.17.1 MKTF WELLS
DRO/GRO/MRO and General Chemistry Analytical Results

			PARAMETERS							
STANDARDS			DRO (mg/L)	GRO (mg/L)	MRO (mg/L)	Fluoride (mg/L)	Chloride (mg/L)	Nitrite (mg/L)	Nitrate (mg/L)	Sulfate (mg/L)
WQCC 20 NMAC 6.2.3103 (DEC 2018)			NE	NE	NE	**1.6**	**250.0**	**1**	**10**	**600.0**
40 CFR 141.62 MCL			NE	NE	NE	4	NE	1	10	NE
NMED Tap Water (JUNE 2019)			NE	NE	NE	1.18	NE	1.97	31.60	NE
EPA RSL for Tap Water (NOVEMBER 2019)			NE	NE	NE	0.8	NE	2	32	NE
NMED SSG (JUNE 2019)			**0.0167**	**0.0101**	**0.0858**	NE	NE	NE	NE	NE
WELL ID	DATE SAMPLED	METHOD								
MKTF-28	10/22/19	8015D/300.0	<0.4*	*<0.05**	*<2.5**	1.2	**460**	<0.5	<0.5	190
	08/21/19	8015D/300.0	*<1.0**	*<0.05**	*<5.0**	1.2	**470**	0.49	0.91	180
	05/06/19	8015D/300.0	*<1.0**	*<0.05**	*<5.0**	1.2	**470**	<0.5	1.1	200
	03/28/19	8015D/300.0	*<1.0**	*<0.05**	*<5.0**	0.97	**420**	**1.2**	1.2	180
	11/18/18	8015D/300.0	*<1.0**	*<0.05**	*<5.0**	1.4	**400**	<0.5	1.7	180
	08/20/18	8015D/300.0	*<1.0**	0.024	*<5.0**	0.48	**540**	<0.5	1.3	240
	05/01/18	8015D/300.0	*<1.0**	*<0.05**	*<5.0**	0.83	**400**	<0.5	2.7	150
	02/06/18	8015D/300.0	*<1.0**	*<0.05**	*<5.0**	1	**380**	**2.7**	2.7	180
	11/20/17	8015D/300.0	*<1.0**	*<0.05**	*<5.0**	1	**410**	**1.9**	1.9	180
	10/03/17	8015D/300.0	*<1.0**	*<0.05**	*<5.0**	0.95	**390**	**1.6**	1.6	150
	06/05/17	8015D/300.0	*<1.0**	*<0.05**	*<5.0**	0.85	**420**	**1.2**	1.2	160
	03/29/17	8015D/300.0	*<1.0**	*<0.05**	*<5.0**	0.87	**410**	1	1	160
	10/28/16	8015D/300.0	*<1.0**	*<0.05**	*<5.0**	1.3	**370**	**1.1**	1.1	130
	09/08/16	8015D/300.0	*<1.0**	0.023	*<5.0**	0.66	**470**	0.73	0.73	190
	06/08/16	8015D/300.0	*<1.0**	*<0.05**	*<5.0**	0.93	**490**	0.84	0.84	160
	02/23/16	8015D/300.0	*<1.0**	*<0.05**	*<5.0**	0.93	**500**	**4.9**	4.9	160
	11/04/15	8015D/300.0	*<1.0**	*<0.05**	*<5.0**	0.86	**510**	*<1.0**	<1.0	160
	08/20/15	8015D/300.0	*<1.0**	*<0.05**	*<5.0**	0.86	**520**	*<1.0**	<1.0	150
	06/09/15	8015D	*<1.0**	*<0.05**	*<5.0**	NA	NA	NA	NA	NA
	03/11/15	8015D	*<1.0**	*<0.05**	*<5.0**	NA	NA	NA	NA	NA
	11/14/14	8015D/300.0	*<1.0**	*<0.05**	*<5.0**	<1.0	**540**	*<1.0**	<1.0	260
	09/24/14	8015D	*<1.0**	*<0.05**	*<5.0**	NA	NA	NA	NA	NA

8.17.1 MKTF WELLS
DRO/GRO/MRO and General Chemistry Analytical Results

			PARAMETERS							
STANDARDS			DRO (mg/L)	GRO (mg/L)	MRO (mg/L)	Fluoride (mg/L)	Chloride (mg/L)	Nitrite (mg/L)	Nitrate (mg/L)	Sulfate (mg/L)
WQCC 20 NMAC 6.2.3103 (DEC 2018)			NE	NE	NE	**1.6**	**250.0**	**1**	**10**	**600.0**
40 CFR 141.62 MCL			NE	NE	NE	4	NE	1	10	NE
NMED Tap Water (JUNE 2019)			NE	NE	NE	1.18	NE	1.97	31.60	NE
EPA RSL for Tap Water (NOVEMBER 2019)			NE	NE	NE	0.8	NE	2	32	NE
NMED SSG (JUNE 2019)			**0.0167**	**0.0101**	**0.0858**	NE	NE	NE	NE	NE
WELL ID	DATE SAMPLED	METHOD								
MKTF-29	10/22/19	8015D/300.0	*<0.40**	*<0.05**	*<2.5**	0.42	**1000**	<0.5	<0.5	320
	08/23/19	8015D/300.0	**0.39**	*<0.05**	*<5.0**	0.71	**610**	0.46	0.097	440
	05/06/19	8015D/300.0	**0.36**	*<0.05**	*<5.0**	0.76	**260**	<0.5	<0.5	540
	03/28/19	8015D/300.0	**0.51**	*<0.05**	*<5.0**	0.54	190	*<1.0**	<1.0	540
	11/15/18	8015D/300.0	*<1.0**	*<0.05**	*<5.0**	0.8	210	<0.5	<0.5	**630**
	08/20/18	8015D/300.0	*<1.0**	**0.021**	*<5.0**	0.57	200	<0.5	0.31	520
	05/01/18	8015D/300.0	**0.66**	*<0.05**	*<5.0**	0.68	160	<0.5	0.21	460
	02/06/18	8015D/300.0	*<1.0**	**0.021**	*<5.0**	0.81	160	*<1.0**	<1.0	560
	11/20/17	8015D/300.0	*<1.0**	*<0.05**	*<5.0**	0.63	150	*<1.0**	<1.0	**780**
	10/03/17	8015D/300.0	**0.37**	*<0.05**	*<5.0**	0.6	150	0.14	0.14	**880**
	06/05/17	8015D/300.0	1	*<0.05**	*<5.0**	0.68	150	*<1.0**	<1.0	**670**
	03/29/17	8015D/300.0	**0.43**	**0.012**	*<5.0**	0.75	100	*<1.0**	<1.0	**640**
	10/28/16	8015D/300.0	*<1.0**	*<0.05**	*<5.0**	1.1	80	*<1.0**	<1.0	560
	09/07/16	8015D/300.0	*<1.0**	**0.029**	*<5.0**	0.85	81	*<1.0**	<1.0	590
	06/09/16	8015D/300.0	*<1.0**	*<0.05**	*<5.0**	1.1	82	*<1.0**	<1.0	**650**
	02/02/16	8015D/300.0	*<1.0**	*<0.05**	*<5.0**	0.96	91	*<1.0**	<1.0	**640**
	11/04/15	8015D/300.0	*<1.0**	*<0.05**	*<5.0**	0.92	90	*<1.0**	<1.0	**650**
	08/20/15	8015D/300.0	*<1.0**	*<0.05**	*<5.0**	0.83	95	*<1.0**	<1.0	440
	06/10/15	8015D	*<1.0**	*<0.05**	*<5.0**	NA	NA	NA	NA	NA
	03/11/15	8015D	*<1.0**	*<0.05**	*<5.0**	NA	NA	NA	NA	NA
	09/24/14	8015D	*<1.0**	*<0.05**	*<5.0**	NA	NA	NA	NA	NA
	04/09/14	8015D	*<1.0**	*<0.05**	*<5.0**	NA	NA	NA	NA	NA

8.17.1 MKTF WELLS
DRO/GRO/MRO and General Chemistry Analytical Results

			PARAMETERS							
STANDARDS			DRO (mg/L)	GRO (mg/L)	MRO (mg/L)	Fluoride (mg/L)	Chloride (mg/L)	Nitrite (mg/L)	Nitrate (mg/L)	Sulfate (mg/L)
WQCC 20 NMAC 6.2.3103 (DEC 2018)			NE	NE	NE	**1.6**	**250.0**	**1**	**10**	**600.0**
40 CFR 141.62 MCL			NE	NE	NE	4	NE	1	10	NE
NMED Tap Water (JUNE 2019)			NE	NE	NE	1.18	NE	1.97	31.60	NE
EPA RSL for Tap Water (NOVEMBER 2019)			NE	NE	NE	0.8	NE	2	32	NE
NMED SSG (JUNE 2019)			**0.0167**	**0.0101**	**0.0858**	NE	NE	NE	NE	NE
WELL ID	DATE SAMPLED	METHOD								
MKTF-30	10/23/19	8015D/300.0	*<0.40**	**0.031**	*<2.5**	1.1	**480**	<0.5	<0.5	480
	08/23/19	8015D/300.0	*<1.0**	**0.047**	*<5.0**	1.3	**480**	0.37	0.22	570
	05/06/19	8015D/300.0	*<1.0**	**0.043**	*<5.0**	1.2	**410**	<0.5	<0.5	540
	03/28/19	8015D/300.0	*<1.0**	**0.036**	*<5.0**	0.93	**410**	*<1.0**	<1.0	510
	11/15/18	8015D/300.0	*<1.0**	**0.04**	*<5.0**	1.2	**460**	<0.5	<0.5	490
	08/20/18	8015D/300.0	*<1.0**	**0.12**	*<5.0**	0.54	**510**	*<1.0**	<1.0	430
	05/01/18	8015D/300.0	*<1.0**	**0.023**	*<5.0**	1.3	**400**	*<1.0**	<1.0	480
	02/06/18	8015D/300.0	*<1.0**	**0.1**	*<5.0**	1.2	**550**	0.31	0.31	390
	11/20/17	8015D/300.0	*<1.0**	**0.075**	*<5.0**	0.88	**620**	0.44	0.44	410
	10/03/17	8015D/300.0	*<1.0**	**0.1**	*<5.0**	0.79	**630**	*<2.0**	<2.0	510
	06/05/17	8015D/300.0	*<1.0**	**0.048**	*<5.0**	1	**620**	0.3	0.3	560
	03/29/17	8015D/300.0	*<1.0**	**0.14**	*<5.0**	0.8	**740**	0.24	0.24	360
	10/28/16	8015D/300.0	*<1.0**	**0.14**	*<5.0**	1.1	**810**	*<1.0**	<1.0	400
	09/07/16	8015D/300.0	*<1.0**	**0.23**	*<5.0**	0.79	**970**	*<1.0**	<1.0	330
	06/09/16	8015D/300.0	*<1.0**	**0.095**	*<5.0**	1.3	**890**	*<1.0**	<1.0	330
	02/23/16	8015D/300.0	*<1.0**	**0.13**	*<5.0**	1.1	**1100**	*<1.0**	<1.0	320
	11/04/15	8015D/300.0	*<1.0**	**0.11**	*<5.0**	0.99	**1300**	*<1.0**	<1.0	380
	08/20/15	8015D/300.0	*<1.0**	**0.17**	*<5.0**	0.79	**1300**	*<1.0**	<1.0	450
	06/10/15	8015D	*<1.0**	**0.071**	*<5.0**	NA	NA	NA	NA	NA
	03/11/15	8015D	*<1.0**	**0.053**	*<5.0**	NA	NA	NA	NA	NA
	11/17/14	8015D/300.0	*<1.0**	**0.054**	*<5.0**	0.56	**1400**	*<1.0**	<1.0	**730**
	09/24/14	8015D	*<1.0**	*<0.05**	*<5.0**	NA	NA	NA	NA	NA
	04/09/14	8015D	*<1.0**	*<0.05**	*<5.0**	NA	NA	NA	NA	NA

8.17.1 MKTF WELLS
DRO/GRO/MRO and General Chemistry Analytical Results

			PARAMETERS							
STANDARDS			DRO (mg/L)	GRO (mg/L)	MRO (mg/L)	Fluoride (mg/L)	Chloride (mg/L)	Nitrite (mg/L)	Nitrate (mg/L)	Sulfate (mg/L)
WQCC 20 NMAC 6.2.3103 (DEC 2018)			NE	NE	NE	**1.6**	**250.0**	**1**	**10**	**600.0**
40 CFR 141.62 MCL			NE	NE	NE	4	NE	1	10	NE
NMED Tap Water (JUNE 2019)			NE	NE	NE	1.18	NE	1.97	31.60	NE
EPA RSL for Tap Water (NOVEMBER 2019)			NE	NE	NE	0.8	NE	2	32	NE
NMED SSG (JUNE 2019)			**0.0167**	**0.0101**	**0.0858**	NE	NE	NE	NE	NE
WELL ID	DATE SAMPLED	METHOD								
MKTF-31	10/22/19	8015D/300.0	*<0.40**	**0.096**	*<2.5**	<0.5	**770**	<0.5	0.095	72
	08/23/19	8015D/300.0	**0.84**	**0.14**	*<5.0**	0.12	**820**	0.91	<0.5	82
	05/06/19	8015D/300.0	*<1.0**	**0.13**	*<5.0**	<0.5	**1200**	<0.5	0.25	110
	02/20/19	8015D/300.0	*<1.0**	**0.14**	*<5.0**	<0.5	**760**	<0.5	<0.5	65
	11/15/18	8015D/300.0	*<1.0**	**0.12**	*<5.0**	<0.5	**810**	<0.5	<0.5	67
	08/17/18	8015D/300.0	*<1.0**	**0.22**	*<5.0**	<0.5	**840**	<0.5	<0.5	64
	05/06/18	8015D/300.0	*<1.0**	**0.32**	*<5.0**	<0.1	**750**	*<1.0**	<1.0	63
	02/05/18	8015D/300.0	*<1.0**	**0.19**	*<5.0**	<0.5	**750**	*<1.0**	<1.0	63
	11/21/17	8015D/300.0	*<1.0**	**0.23**	*<5.0**	<0.5	**890**	<0.5	<0.5	76
	09/25/17	8015D/300.0	*<1.0**	**0.2**	*<5.0**	<0.5	**770**	*<1.0**	<1.0	76
	06/05/17	8015D/300.0	**0.47**	**0.15**	*<5.0**	<0.1	**1200**	*<1.0**	<1.0	98
	03/07/17	8015D/300.0	*<1.0**	**0.19**	*<5.0**	<0.1	**1100**	*<1.0**	<1.0	87
	10/31/16	8015D/300.0	*<1.0**	**0.16**	*<5.0**	<0.1	**720**	*<2.0**	<2.0	70
	09/08/16	8015D/300.0	*<1.0**	**0.23**	*<5.0**	<0.1	**940**	*<1.0**	<1.0	70
	06/09/16	8015D/300.0	*<1.0**	**0.16**	*<5.0**	<0.1	**770**	*<1.0**	<1.0	69
	02/23/16	8015D/300.0	*<1.0**	**0.1**	*<5.0**	<0.1	**830**	*<1.0**	<1.0	68
	11/04/15	8015D/300.0	**1.3**	**0.086**	*<5.0**	<0.1	**850**	*<1.0**	<1.0	69
	08/21/15	8015D/300.0	*<1.0**	**0.1**	*<5.0**	<0.5	**890**	*<1.0**	<1.0	71
	06/10/15	8015D	*<1.0**	**0.11**	*<5.0**	NA	NA	NA	NA	NA
	03/11/15	8015D	*<1.0**	**0.077**	*<5.0**	NA	NA	NA	NA	NA
	11/17/14	8015D/300.0	*<1.0**	**0.068**	*<5.0**	<0.1	**920**	*<1.0**	<1.0	82
	09/23/14	8015D	*<1.0**	**0.061**	*<5.0**	NA	NA	NA	NA	NA
	04/08/14	8015D	*<1.0**	**0.11**	*<5.0**	NA	NA	NA	NA	NA

8.17.1 MKTF WELLS
DRO/GRO/MRO and General Chemistry Analytical Results

			PARAMETERS							
STANDARDS			DRO (mg/L)	GRO (mg/L)	MRO (mg/L)	Fluoride (mg/L)	Chloride (mg/L)	Nitrite (mg/L)	Nitrate (mg/L)	Sulfate (mg/L)
WQCC 20 NMAC 6.2.3103 (DEC 2018)			NE	NE	NE	**1.6**	**250.0**	**1**	**10**	**600.0**
40 CFR 141.62 MCL			NE	NE	NE	4	NE	1	10	NE
NMED Tap Water (JUNE 2019)			NE	NE	NE	1.18	NE	1.97	31.60	NE
EPA RSL for Tap Water (NOVEMBER 2019)			NE	NE	NE	0.8	NE	2	32	NE
NMED SSG (JUNE 2019)			**0.0167**	**0.0101**	**0.0858**	NE	NE	NE	NE	NE
WELL ID	DATE SAMPLED	METHOD								
MKTF-32	10/23/19	8015D/300.0	*<0.40**	**0.28**	*<2.5**	0.37	**400**	<0.5	<0.5	90
	08/20/19	8015D/300.0	*<1.0**	**0.5**	*<5.0**	0.28	**400**	<0.5	0.41	92
	05/07/19	8015D/300.0	*<1.0**	**0.47**	*<5.0**	<0.5	**450**	0.3	<0.5	93
	02/13/19	8015D/300.0	*<1.0**	**0.43**	*<5.0**	0.29	**420**	<0.5	<0.5	89
	11/15/18	8015D/300.0	*<1.0**	**0.56**	*<5.0**	<0.5	**370**	<0.5	<0.5	89
	08/28/18	8015D/300.0	*<1.0**	**0.7**	*<5.0**	<0.5	**440**	<0.5	<0.5	94
	05/09/18	8015D/300.0	*<1.0**	**0.64**	*<5.0**	0.049	**430**	*<1.0**	<1.0	83
	02/07/18	8015D/300.0	*<1.0**	**0.65**	*<5.0**	*<5.0**	**420**	*<1.0**	<1.0	93
	11/27/17	8015D/300.0	*<1.0**	**0.86**	*<5.0**	*<5.0**	**420**	*<1.0**	<1.0	99
	09/25/17	8015D/300.0	*<1.0**	**0.73**	*<5.0**	0.32	**420**	*<1.0**	<1.0	100
	06/06/17	8015D/300.0	*<1.0**	**0.71**	*<5.0**	0.31	**480**	*<1.0**	<1.0	92
	03/07/17	8015D/300.0	*<1.0**	**0.92**	*<5.0**	0.17	**400**	*<1.0**	<1.0	91
	10/31/16	8015D/300.0	*<1.0**	**0.92**	*<5.0**	0.16	**420**	*<1.0**	<1.0	95
	09/09/16	8015D/300.0	*<1.0**	**0.79**	*<5.0**	0.18	**460**	*<1.0**	<1.0	91
	06/09/16	8015D/300.0	*<1.0**	**0.81**	*<5.0**	0.28	**520**	*<1.0**	<1.0	100
	02/24/16	8015D/300.0	*<1.0**	**0.88**	*<5.0**	0.28	**450**	*<1.0**	<1.0	91
	11/05/15	8015D/300.0	*<1.0**	**0.57**	*<5.0**	0.19	**510**	*<1.0**	<1.0	100
	08/21/15	8015D/300.0	*<1.0**	**0.42**	*<5.0**	<0.5	**580**	*<1.0**	<1.0	110
	06/09/15	8015D	*<1.0**	**0.58**	*<5.0**	NA	NA	NA	NA	NA
	03/12/15	8015D	*<1.0**	**0.46**	*<5.0**	NA	NA	NA	NA	NA
	11/17/14	8015D/300.0	*<1.0**	**0.28**	*<5.0**	0.27	**610**	*<1.0**	<1.0	100
	09/23/14	8015D	*<1.0**	**0.23**	*<5.0**	NA	NA	NA	NA	NA
	04/09/14	8015D	*<1.0**	**0.22**	*<5.0**	NA	NA	NA	NA	NA

8.17.1 MKTF WELLS
DRO/GRO/MRO and General Chemistry Analytical Results

			PARAMETERS							
STANDARDS			DRO (mg/L)	GRO (mg/L)	MRO (mg/L)	Fluoride (mg/L)	Chloride (mg/L)	Nitrite (mg/L)	Nitrate (mg/L)	Sulfate (mg/L)
WQCC 20 NMAC 6.2.3103 (DEC 2018)			NE	NE	NE	**1.6**	**250.0**	**1**	**10**	**600.0**
40 CFR 141.62 MCL			NE	NE	NE	4	NE	1	10	NE
NMED Tap Water (JUNE 2019)			NE	NE	NE	1.18	NE	1.97	31.60	NE
EPA RSL for Tap Water (NOVEMBER 2019)			NE	NE	NE	0.8	NE	2	32	NE
NMED SSG (JUNE 2019)			**0.0167**	**0.0101**	**0.0858**	NE	NE	NE	NE	NE
WELL ID	DATE SAMPLED	METHOD								
MKTF-33	10/24/19	8015D/300.0	<0.4*	**0.49**	*<2.5**	0.38	110	<0.5	<0.5	190
	08/20/19	8015D/300.0	*<1.0**	**0.53**	*<5.0**	0.29	110	<0.5	0.14	170
	05/09/19	8015D/300.0	*<1.0**	**0.21**	*<5.0**	0.33	110	<0.5	0.16	240
	03/26/19	8015D/300.0	*<1.0**	**0.46**	*<5.0**	0.29	100	<0.5	<0.5	180
	11/28/18	8015D/300.0	**0.69**	**0.24**	*<5.0**	<0.5	97	<0.5	<0.5	220
	08/30/18	8015D/300.0	**1.3**	**0.49**	*<5.0**	0.22	93	<0.5	0.23	230
	05/10/18	8015D/300.0	**1.5**	**0.5**	*<5.0**	0.15	100	<0.1	0.15	210
	02/08/18	8015D/300.0	*<1.0**	**0.22**	*<5.0**	<0.5	100	0.18	0.18	280
	11/28/17	8015D/300.0	*<1.0**	**0.35**	*<5.0**	0.23	96	0.32	0.32	250
	09/25/17	8015D/300.0	*<1.0**	**0.26**	*<5.0**	0.33	93	0.24	0.24	270
	06/08/17	8015D/300.0	*<1.0**	**0.25**	*<5.0**	0.17	92	0.21	0.21	290
	03/08/17	8015D/300.0	*<1.0**	**0.3**	*<5.0**	0.22	96	0.19	0.19	330
	11/01/16	8015D/300.0	*<1.0**	**0.31**	*<5.0**	0.29	87	*<1.0**	<1.0	320
	09/10/16	8015D/300.0	*<1.0**	**5.2**	*<5.0**	0.13	94	*<1.0**	<1.0	340
	06/10/16	8015D/300.0	*<1.0**	**0.69**	*<5.0**	0.3	100	*<1.0**	<1.0	340
	02/25/16	8015D/300.0	*<1.0**	**0.35**	*<5.0**	0.25	100	*<1.0**	<1.0	310
	11/09/15	8015D/300.0	*<1.0**	**0.53**	*<5.0**	0.34	99	<0.1	<0.1	290
	08/21/15	8015D/300.0	*<1.0**	**0.47**	*<5.0**	<0.5	95	*<1.0**	<1.0	260
	06/09/15	8015D	*<1.0**	**0.42**	*<5.0**	NA	NA	NA	NA	NA
	03/12/15	8015D	*<1.0**	**0.35**	*<5.0**	NA	NA	NA	NA	NA
	11/17/14	8015D/300.0	*<1.0**	**0.36**	*<5.0**	0.31	98	*<1.0**	<1.0	360
	09/23/14	8015D	*<1.0**	**0.25**	*<5.0**	NA	NA	NA	NA	NA
	04/09/14	8015D	*<1.0**	**0.21**	*<5.0**	NA	NA	NA	NA	NA

8.17.1 MKTF WELLS
DRO/GRO/MRO and General Chemistry Analytical Results

			PARAMETERS							
STANDARDS			DRO (mg/L)	GRO (mg/L)	MRO (mg/L)	Fluoride (mg/L)	Chloride (mg/L)	Nitrite (mg/L)	Nitrate (mg/L)	Sulfate (mg/L)
WQCC 20 NMAC 6.2.3103 (DEC 2018)			NE	NE	NE	**1.6**	**250.0**	**1**	**10**	**600.0**
40 CFR 141.62 MCL			NE	NE	NE	4	NE	1	10	NE
NMED Tap Water (JUNE 2019)			NE	NE	NE	1.18	NE	1.97	31.60	NE
EPA RSL for Tap Water (NOVEMBER 2019)			NE	NE	NE	0.8	NE	2	32	NE
NMED SSG (JUNE 2019)			**0.0167**	**0.0101**	**0.0858**	NE	NE	NE	NE	NE
WELL ID	DATE SAMPLED	METHOD								
MKTF-34	10/29/19	8015D/300.0	<0.4*	*<0.05**	*<2.5**	0.5	**450**	<0.5	**14**	200
	08/19/19	8015D/300.0	*<1.0**	*<0.05**	*<5.0**	0.25	**740**	<0.5	9.7	110
	05/09/19	8015D/300.0	*<1.0**	*<0.05**	*<5.0**	0.35	**890**	<0.5	9.7	60
	03/26/19	8015D/300.0	*<1.0**	*<0.05**	*<5.0**	0.41	**1000**	<0.5	**11**	35
	11/28/18	8015D/300.0	*<1.0**	*<0.05**	*<5.0**	<0.5	210	0.089	8.4	280
	08/24/18	8015D/300.0	*<1.0**	*<0.05**	*<5.0**	0.32	220	<0.5	8.1	230
	05/04/18	8015D/300.0	*<1.0**	*<0.05**	*<5.0**	0.31	230	<0.1	8.1	250
	02/16/18	8015D/300.0	*<1.0**	0.012	*<5.0**	0.45	230	<0.5	8.4	230
	12/01/17	8015D/300.0	*<1.0**	0.027	*<5.0**	0.54	**270**	**8**	8	230
	09/26/17	8015D/300.0	*<1.0**	*<0.05**	*<5.0**	0.29	**280**	**7.6**	7.6	220
	06/14/17	8015D/300.0	*<1.0**	*<0.05**	*<5.0**	*<5.0**	**280**	**8.4**	8.4	210
	03/01/17	8015D/300.0	*<1.0**	*<0.05**	*<5.0**	0.45	**310**	**9**	9	220
	11/08/16	8015D/300.0	*<1.0**	*<0.05**	*<5.0**	0.46	240	**8.3**	8.3	180
	09/13/16	8015D/300.0	*<1.0**	0.033	*<5.0**	0.42	**300**	**9.1**	9.1	200
	06/10/16	8015D/300.0	*<1.0**	*<0.05**	*<5.0**	0.52	**370**	**7.7**	7.7	130
	02/25/16	8015D/300.0	*<1.0**	*<0.05**	*<5.0**	0.53	**380**	**18**	**18**	110
	11/03/15	8015D/300.0	*<1.0**	*<0.05**	*<5.0**	0.46	**370**	<0.1	8.6	100
	08/18/15	8015D/300.0	*<1.0**	*<0.05**	*<5.0**	0.44	**350**	<0.1	8.6	100
	06/08/15	8015D	*<1.0**	*<0.05**	*<5.0**	NA	NA	NA	NA	NA
	03/12/15	8015D	*<1.0**	*<0.05**	*<5.0**	NA	NA	NA	NA	NA
	11/17/14	8015D/300.0	*<1.0**	*<0.05**	*<5.0**	0.54	**400**	**6.6**	6.6	73
	09/24/14	8015D	*<1.0**	*<0.05**	*<5.0**	NA	NA	NA	NA	NA
	04/09/14	8015D	*<1.0**	*<0.05**	*<5.0**	NA	NA	NA	NA	NA

8.17.1 MKTF WELLS
DRO/GRO/MRO and General Chemistry Analytical Results

			PARAMETERS							
STANDARDS			DRO (mg/L)	GRO (mg/L)	MRO (mg/L)	Fluoride (mg/L)	Chloride (mg/L)	Nitrite (mg/L)	Nitrate (mg/L)	Sulfate (mg/L)
WQCC 20 NMAC 6.2.3103 (DEC 2018)			NE	NE	NE	**1.6**	**250.0**	**1**	**10**	**600.0**
40 CFR 141.62 MCL			NE	NE	NE	4	NE	1	10	NE
NMED Tap Water (JUNE 2019)			NE	NE	NE	1.18	NE	1.97	31.60	NE
EPA RSL for Tap Water (NOVEMBER 2019)			NE	NE	NE	0.8	NE	2	32	NE
NMED SSG (JUNE 2019)			**0.0167**	**0.0101**	**0.0858**	NE	NE	NE	NE	NE
WELL ID	DATE SAMPLED	METHOD								
MKTF-35	10/28/19	8015D/300.0	**0.48**	**0.73**	*<2.5**	0.87	220	<0.5	<0.5	36
	08/19/19	8015D/300.0	**0.72**	**0.56**	*<5.0**	0.77	190	<0.5	<0.5	79
	05/16/19	8015D/300.0	**1.6**	**0.57**	*<5.0**	0.64	250	<0.5	<0.5	80
	03/26/19	8015D/300.0	**0.64**	**0.51**	*<5.0**	0.65	190	<0.5	<0.5	95
	11/28/18	8015D/300.0	*<1.0**	**0.72**	*<5.0**	0.85	170	0.068	<0.5	39
	08/23/18	8015D/300.0	*<1.0**	**0.49**	*<5.0**	0.67	170	<0.5	<0.5	38
	05/03/18	8015D/300.0	**1.3**	**0.44**	*<5.0**	0.58	190	<0.1	0.032	48
	02/15/18	8015D/300.0	**0.94**	**0.37**	*<5.0**	0.68	180	<0.5	<0.5	37
	11/30/17	8015D/300.0	**0.92**	**0.47**	*<5.0**	0.9	190	*<1.0**	<1.0	34
	09/27/17	8015D/300.0	**1.7**	**0.57**	*<5.0**	0.8	190	*<1.0**	<1.0	38
	06/14/17	8015D/300.0	**2.1**	**0.6**	*<5.0**	0.3	150	*<1.0**	<1.0	99
	03/01/17	8015D/300.0	**2.1**	**0.73**	*<5.0**	0.94	71	*<1.0**	<1.0	410
	11/03/16	8015D/300.0	*<1.0**	**1.7**	*<5.0**	0.82	54	*<1.0**	<1.0	310
	09/13/16	8015D/300.0	*<1.0**	**2**	*<5.0**	0.77	62	*<1.0**	<1.0	270
	06/10/16	8015D/300.0	*<1.0**	**1.4**	*<5.0**	0.79	51	*<1.0**	<1.0	210
	02/26/16	8015D/300.0	**0.94**	**0.87**	*<5.0**	0.45	65	*<1.0**	<1.0	99
	11/03/15	8015D/300.0	**2.8**	**1.5**	*<5.0**	0.79	100	<0.1	<0.1	16
	08/18/15	8015D/300.0	**2.9**	**4.7**	*<5.0**	0.73	110	<0.1	<0.1	20
	06/04/15	8015D	**2.3**	**2.9**	*<5.0**	NA	NA	NA	NA	NA
	03/17/15	8015D	**6**	**3.7**	*<5.0**	NA	NA	NA	NA	NA
	11/21/14	8015D	**3.3**	**1.6**	*<5.0**	NA	NA	NA	NA	NA

8.17.1 MKTF WELLS
DRO/GRO/MRO and General Chemistry Analytical Results

			PARAMETERS							
STANDARDS			DRO (mg/L)	GRO (mg/L)	MRO (mg/L)	Fluoride (mg/L)	Chloride (mg/L)	Nitrite (mg/L)	Nitrate (mg/L)	Sulfate (mg/L)
WQCC 20 NMAC 6.2.3103 (DEC 2018)			NE	NE	NE	**1.6**	**250.0**	**1**	**10**	**600.0**
40 CFR 141.62 MCL			NE	NE	NE	4	NE	1	10	NE
NMED Tap Water (JUNE 2019)			NE	NE	NE	1.18	NE	1.97	31.60	NE
EPA RSL for Tap Water (NOVEMBER 2019)			NE	NE	NE	0.8	NE	2	32	NE
NMED SSG (JUNE 2019)			**0.0167**	**0.0101**	**0.0858**	NE	NE	NE	NE	NE
WELL ID	DATE SAMPLED	METHOD								
MKTF-36	11/06/19	--	SPH Detected - No samples were collected.							
	08/19/19	--	Well paved over and inaccessible - no samples were collected							
	05/14/19	--	Well paved over and inaccessible - no samples were collected							
	03/25/19	--	Well paved over and inaccessible - no samples were collected							
	11/29/18	--	Well paved over and inaccessible - no samples were collected							
	09/05/18	8015D/300.0	**5.6**	**25**	*<5.0**	0.82	190	<0.5	0.07	<2.5
	05/03/18	8015D/300.0	**10**	**26**	*<5.0**	0.78	180	<0.5	0.085	<2.5
	02/15/18	8015D/300.0	**10**	**27**	*<5.0**	0.62	180	<0.5	<0.5	<2.5
	11/30/17	8015D/300.0	**12**	**31**	*<5.0**	0.79	170	0.29	0.29	0.51
	09/27/17	8015D/300.0	**24**	**31**	*<50**	0.66	160	*<1.0**	<1.0	0.7
	06/14/17	8015D/300.0	**14**	**34**	*<5.0**	0.56	140	*<1.0**	<1.0	<2.5
	03/01/17	8015D/300.0	**13**	**35**	*<5.0**	0.6	140	*<1.0**	<1.0	<2.5
	11/08/16	8015D/300.0	**11**	**40**	*<5.0**	0.67	130	*<1.0**	<1.0	<2.5
	09/13/16	--	SPH Detected - No samples were collected.							
	06/10/16	--	SPH Detected - No samples were collected.							
	03/17/16	--	SPH Detected - No samples were collected.							
	11/03/15	--	SPH Detected - No samples were collected.							
	08/18/15	8015D/300.0	**14**	**39**	*<5.0**	0.6	140	<0.5	<0..5	<2.5
	06/04/15	8015D	**13**	**30**	*<5.0**	NA	NA	NA	NA	NA
	03/17/15	8015D	**10**	**38**	*<5.0**	NA	NA	NA	NA	NA
	11/21/14	8015D	**6.8**	**25**	*<5.0**	NA	NA	NA	NA	NA

8.17.1 MKTF WELLS
DRO/GRO/MRO and General Chemistry Analytical Results

			PARAMETERS							
STANDARDS			DRO (mg/L)	GRO (mg/L)	MRO (mg/L)	Fluoride (mg/L)	Chloride (mg/L)	Nitrite (mg/L)	Nitrate (mg/L)	Sulfate (mg/L)
WQCC 20 NMAC 6.2.3103 (DEC 2018)			NE	NE	NE	**1.6**	**250.0**	**1**	**10**	**600.0**
40 CFR 141.62 MCL			NE	NE	NE	4	NE	1	10	NE
NMED Tap Water (JUNE 2019)			NE	NE	NE	1.18	NE	1.97	31.60	NE
EPA RSL for Tap Water (NOVEMBER 2019)			NE	NE	NE	0.8	NE	2	32	NE
NMED SSG (JUNE 2019)			**0.0167**	**0.0101**	**0.0858**	NE	NE	NE	NE	NE
WELL ID	DATE SAMPLED	METHOD								
MKTF-37	10/28/19	--	SPH Detected - No samples were collected.							
	08/23/19	--	SPH Detected - No samples were collected.							
	05/16/19	--	SPH Detected - No samples were collected.							
	03/26/19	8015D/300.0	**21**	**16**	*<5.0**	0.93	110	<0.5	<0.5	71
	11/27/18	--	SPH Detected - No samples were collected.							
	08/23/18	8015D/300.0	**3**	**17**	*<5.0**	0.47	140	<0.5	<0.5	20
	05/03/18	8015D/300.0	**6.1**	**16**	*<5.0**	<0.5	240	<0.5	0.084	23
	02/15/18	--	SPH Detected - No samples were collected.							
	11/30/17	--	SPH Detected - No samples were collected.							
	11/03/17	8015D/300.0	**6.2**	**15**	*<5.0**	0.16	180	*<1.0**	<1.0	12
	09/27/17	--	SPH Detected - No samples were collected.							
	06/14/17	--	SPH Detected - No samples were collected.							
	06/04/15	8015D	**5.7**	**12**	*<5.0**	NA	NA	NA	NA	NA
	03/17/15	8015D	**4.5**	**11**	*<5.0**	NA	NA	NA	NA	NA
	11/21/14	8015D	*<1.0**	**8.7**	*<5.0**	NA	NA	NA	NA	NA

8.17.1 MKTF WELLS
DRO/GRO/MRO and General Chemistry Analytical Results

			PARAMETERS							
STANDARDS			DRO (mg/L)	GRO (mg/L)	MRO (mg/L)	Fluoride (mg/L)	Chloride (mg/L)	Nitrite (mg/L)	Nitrate (mg/L)	Sulfate (mg/L)
WQCC 20 NMAC 6.2.3103 (DEC 2018)			NE	NE	NE	**1.6**	**250.0**	**1**	**10**	**600.0**
40 CFR 141.62 MCL			NE	NE	NE	4	NE	1	10	NE
NMED Tap Water (JUNE 2019)			NE	NE	NE	1.18	NE	1.97	31.60	NE
EPA RSL for Tap Water (NOVEMBER 2019)			NE	NE	NE	0.8	NE	2	32	NE
NMED SSG (JUNE 2019)			**0.0167**	**0.0101**	**0.0858**	NE	NE	NE	NE	NE
WELL ID	DATE SAMPLED	METHOD								
MKTF-38	12/03/19	8015D/300.0	*<0.4**	*<0.05**	*<2.5**	0.69	**280**	0.32	9	470
	08/20/19	8015D/300.0	*<1.0**	*<0.05**	*<5.0**	0.93	**360**	<0.5	5.5	560
	06/27/19	8015D/300.0	*<1.0**	*<0.05**	*<5.0**	0.8	**330**	<0.5	4.8	600
	05/14/19	8015D/300.0	*<1.0**	*<0.05**	*<5.0**	0.92	240	<0.5	3.7	600
	03/26/19	8015D/300.0	*<1.0**	*<0.05**	*<5.0**	0.94	150	<0.5	0.66	**640**
	11/20/18	8015D/300.0	*<1.0**	**0.13**	*<5.0**	0.81	240	0.21	5.9	400
	08/21/18	8015D/300.0	*<1.0**	**0.025**	*<5.0**	0.8	**370**	<0.5	1.9	300
	05/03/18	8015D/300.0	*<1.0**	*<0.05**	*<5.0**	0.65	**290**	*<1.0**	0.4	320
	02/12/18	8015D/300.0	*<1.0**	**0.012**	*<5.0**	0.71	210	<0.5	2.8	220
	11/30/17	8015D/300.0	*<1.0**	**0.026**	*<5.0**	0.9	210	**1.2**	1.2	250
	09/28/17	8015D/300.0	*<1.0**	**0.03**	*<5.0**	0.69	230	<0.5	<0.5	260
	06/21/17	8015D/300.0	*<1.0**	*<0.05**	*<5.0**	0.79	**280**	0.24	0.24	290
	03/14/17	8015D/300.0	*<1.0**	*<0.05**	*<5.0**	0.74	130	0.26	0.26	380
	11/01/16	8015D/300.0	*<1.0**	**0.065**	*<5.0**	0.82	200	0.14	8.8	320
	09/13/16	8015D/300.0	*<1.0**	**0.09**	*<5.0**	0.73	**260**	**5**	5	330
	06/08/16	8015D/300.0	*<1.0**	**0.06**	*<5.0**	0.7	**270**	**9.9**	9.9	360
	02/29/16	8015D/300.0	*<1.0**	**0.14**	*<5.0**	0.75	110	**7.2**	7.2	450
	11/09/15	8015D/300.0	*<1.0**	**0.12**	*<5.0**	0.91	210	<0.1	<0.01	400
	08/24/15	8015D/300.0	*<1.0**	**0.099**	*<5.0**	0.69	210	<0.1	3.2	390
	06/10/15	8015D	*<1.0**	**0.2**	*<5.0**	NA	NA	NA	NA	NA
	03/16/15	8015D	*<1.0**	**0.33**	*<5.0**	NA	NA	NA	NA	NA
	11/21/14	8015D	**3.8**	**0.12**	*<5.0**	NA	NA	NA	NA	NA

8.17.1 MKTF WELLS
DRO/GRO/MRO and General Chemistry Analytical Results

STANDARDS			PARAMETERS							
			DRO (mg/L)	GRO (mg/L)	MRO (mg/L)	Fluoride (mg/L)	Chloride (mg/L)	Nitrite (mg/L)	Nitrate (mg/L)	Sulfate (mg/L)
WQCC 20 NMAC 6.2.3103 (DEC 2018)			NE	NE	NE	**1.6**	**250.0**	**1**	**10**	**600.0**
40 CFR 141.62 MCL			NE	NE	NE	4	NE	1	10	NE
NMED Tap Water (JUNE 2019)			NE	NE	NE	1.18	NE	1.97	31.60	NE
EPA RSL for Tap Water (NOVEMBER 2019)			NE	NE	NE	0.8	NE	2	32	NE
NMED SSG (JUNE 2019)			**0.0167**	**0.0101**	**0.0858**	NE	NE	NE	NE	NE
WELL ID	**DATE SAMPLED**	**METHOD**								
MKTF-39	11/05/19	8015D/300.0	**16**	**0.48**	*<2.5**	<2	**7500**	*<10**	*<10**	1.2
	08/20/19	8015D/300.0	**17**	**0.65**	*<5.0**	<0.5	**8900**	**8.1**	8.1	4.5
	06/05/19	8015D/300.0	**46**	**0.34**	*<5.0**	<0.5	**9000**	*<2.0**	<0.5	<2.5
	03/28/19	--	Located within barricaded area - not accessible to collect samples							
	11/20/18	8015D/300.0	**11**	**0.25**	*<5.0**	<0.5	**1900**	0.72	<0.5	<2.5
	11/20/18	8015D/300.0	**11**	**0.25**	*<5.0**	<0.5	**1900**	0.72	<0.5	<2.5
	08/21/18	8015D/300.0	**11**	**0.91**	*<5.0**	0.28	**1600**	<0.5	0.2	1.1
	05/06/18	8015D/300.0	**17**	**0.7**	*<5.0**	0.86	**960**	0.64	<0.5	<2.5
	02/08/18	8015D/300.0	**17**	**0.7**	*<5.0**	<0.5	**3200**	1	1	<2.5
	11/28/17	8015D/300.0	**14**	**0.9**	*<5.0**	0.46	**1900**	0.36	0.36	<2.5
	09/28/17	8015D/300.0	**28**	**0.37**	*<5.0**	<0.5	**3400**	<0.5	<0.5	0.49
	06/08/17	8015D/300.0	**56**	**0.73**	*<5.0**	0.87	**790**	*<1.0**	<1.0	0.16
	03/14/17	8015D/300.0	**28**	**1.5**	*<5.0**	0.44	**1000**	*<2.0**	<2.0	0.23
	11/01/16	8015D/300.0	**17**	**0.36**	*<5.0**	0.97	**1300**	<0.5	<0.5	<2.5
	09/13/16	8015D/300.0	**10**	**1.1**	*<5.0**	0.26	**1900**	*<2.0**	<2.0	<10
	06/08/16	8015D/300.0	**19**	**0.67**	*<5.0**	0.54	**2300**	*<2.0**	<2.0	0.21
	03/03/16	8015D/300.0	**13**	**0.46**	*<5.0**	0.71	**2900**	*<4.0**	<4.0	4.2
	11/09/15	8015D/300.0	**23**	**0.44**	*<5.0**	*<2.0**	**6400**	*<2.0**	<0.1	<0.5
	08/23/15	8015D/300.0	**13**	**0.93**	*<5.0**	<0.5	**9100**	*<4.0**	<4.0	<2.5
	06/10/15	8015D	**44**	**0.44**	*<5.0**	NA	NA	NA	NA	NA
	03/16/15	8015D	**6.2**	**0.21**	*<5.0**	NA	NA	NA	NA	NA
	11/18/14	8015D	**15**	**0.39**	*<5.0**	NA	NA	NA	NA	NA

8.17.1 MKTF WELLS
DRO/GRO/MRO and General Chemistry Analytical Results

			PARAMETERS							
STANDARDS			DRO (mg/L)	GRO (mg/L)	MRO (mg/L)	Fluoride (mg/L)	Chloride (mg/L)	Nitrite (mg/L)	Nitrate (mg/L)	Sulfate (mg/L)
WQCC 20 NMAC 6.2.3103 (DEC 2018)			NE	NE	NE	**1.6**	**250.0**	**1**	**10**	**600.0**
40 CFR 141.62 MCL			NE	NE	NE	4	NE	1	10	NE
NMED Tap Water (JUNE 2019)			NE	NE	NE	1.18	NE	1.97	31.60	NE
EPA RSL for Tap Water (NOVEMBER 2019)			NE	NE	NE	0.8	NE	2	32	NE
NMED SSG (JUNE 2019)			**0.0167**	**0.0101**	**0.0858**	NE	NE	NE	NE	NE
WELL ID	DATE SAMPLED	METHOD								
MKTF-40	10/22/19	8015D/300.0	*<0.40**	*<0.05**	*<2.5**	<0.5	**2800**	*<2.0**	0.17	540
	08/22/19	8015D/300.0	*<1.0**	*<0.05**	*<5.0**	<0.5	**3500**	*<2.0**	0.081	500
	05/06/19	8015D/300.0	*<1.0**	*<0.05**	*<5.0**	<0.5	**3200**	**3.3**	<0.5	560
	02/20/19	8015D/300.0	*<1.0**	*<0.05**	*<5.0**	<0.5	**3100**	*<2.0**	<0.5	550
	11/15/18	8015D/300.0	*<1.0**	*<0.05**	*<5.0**	<0.5	**2700**	*<2.0**	<0.5	**610**
	08/17/18	8015D/300.0	*<1.0**	0.019	*<5.0**	<0.5	**3100**	*<2.0**	<0.5	550
	05/06/18	8015D/300.0	*<1.0**	*<0.05**	*<5.0**	<0.5	**4800**	**2.4**	0.1	560
	02/05/18	8015D/300.0	*<1.0**	*<0.05**	*<5.0**	<0.5	**4000**	*<4.0**	<4.0	480
	11/21/17	8015D/300.0	*<1.0**	*<0.05**	*<5.0**	<0.5	**4100**	*<2.0**	<2.0	590
	09/25/17	8015D/300.0	*<1.0**	*<0.05**	*<5.0**	<0.5	**3600**	*<4.0**	<4.0	590
	06/05/17	8015D/300.0	*<1.0**	*<0.05**	*<5.0**	<2	**4400**	*<4.0**	<4.0	580
	03/07/17	8015D/300.0	*<1.0**	*<0.05**	*<5.0**	<0.1	**4200**	*<4.0**	<4.0	500
	10/31/16	8015D/300.0	*<1.0**	*<0.05**	*<5.0**	*<2.0**	**3700**	*<4.0**	<4.0	500
	09/08/16	8015D/300.0	*<1.0**	*<0.05**	*<5.0**	*<2.0**	**5300**	*<4.0**	<4.0	460
	06/09/16	8015D/300.0	*<1.0**	*<0.05**	*<5.0**	*<2.0**	**5300**	*<4.0**	<4.0	390
	02/23/16	8015D/300.0	*<1.0**	*<0.05**	*<5.0**	<0.1	**4900**	*<10**	*<10**	520
	11/04/15	8015D/300.0	*<1.0**	*<0.05**	*<5.0**	<0.1	**4600**	*<1.0**	<1.0	540
	08/21/15	8015D/300.0	*<1.0**	*<0.05**	*<5.0**	<0.5	**3400**	*<4.0**	<4.0	**890**
	06/10/15	8015D	*<1.0**	*<0.05**	*<5.0**	NA	NA	NA	NA	NA
	03/11/15	8015D	*<1.0**	*<0.05**	*<5.0**	NA	NA	NA	NA	NA
	11/21/14	8015D	*<1.0**	*<0.05**	*<5.0**	NA	NA	NA	NA	NA

8.17.1 MKTF WELLS
DRO/GRO/MRO and General Chemistry Analytical Results

			PARAMETERS							
STANDARDS			DRO (mg/L)	GRO (mg/L)	MRO (mg/L)	Fluoride (mg/L)	Chloride (mg/L)	Nitrite (mg/L)	Nitrate (mg/L)	Sulfate (mg/L)
WQCC 20 NMAC 6.2.3103 (DEC 2018)			NE	NE	NE	**1.6**	**250.0**	**1**	**10**	**600.0**
40 CFR 141.62 MCL			NE	NE	NE	4	NE	1	10	NE
NMED Tap Water (JUNE 2019)			NE	NE	NE	1.18	NE	1.97	31.60	NE
EPA RSL for Tap Water (NOVEMBER 2019)			NE	NE	NE	0.8	NE	2	32	NE
NMED SSG (JUNE 2019)			**0.0167**	**0.0101**	**0.0858**	NE	NE	NE	NE	NE
WELL ID	DATE SAMPLED	METHOD								
MKTF-41	10/23/19	8015D/300.0	<0.4*	*<0.05**	*<2.5**	0.44	**800**	<0.5	4.8	58
	08/22/19	8015D/300.0	*<1.0**	*<0.05**	*<5.0**	0.4	**840**	<0.5	4.8	59
	05/07/19	8015D/300.0	*<1.0**	*<0.05**	*<5.0**	0.31	**910**	0.78	4.8	62
	02/13/19	8015D/300.0	*<1.0**	*<0.05**	*<5.0**	0.33	**840**	<0.5	5.6	61
	11/15/18	8015D/300.0	*<1.0**	*<0.05**	*<5.0**	<0.5	**840**	**5.7**	5.7	61
	08/29/18	8015D/300.0	*<1.0**	*<0.05**	*<5.0**	0.57	**850**	*<1.0**	5.5	64
	05/09/18	8015D/300.0	*<1.0**	*<0.05**	*<5.0**	0.11	**840**	**4.9**	4.9	56
	02/07/18	8015D/300.0	*<1.0**	0.017	*<5.0**	0.27	**790**	**5.3**	5.3	61
	11/27/17	8015D/300.0	*<1.0**	*<0.05**	*<5.0**	<0.5	**860**	**5.6**	5.6	65
	09/25/17	8015D/300.0	*<1.0**	0.029	*<5.0**	0.47	**810**	**5.3**	5.3	65
	06/06/17	8015D/300.0	*<1.0**	*<0.05**	*<5.0**	0.24	**910**	**5.4**	5.4	66
	03/07/17	8015D/300.0	*<1.0**	*<0.05**	*<5.0**	0.32	**800**	**3.9**	3.9	64
	10/31/16	8015D/300.0	*<1.0**	*<0.05**	*<5.0**	0.26	**730**	**5.4**	5.4	64
	09/09/16	8015D/300.0	*<1.0**	*<0.05**	*<5.0**	0.29	**910**	**5.7**	5.7	60
	06/09/16	8015D/300.0	*<1.0**	*<0.05**	*<5.0**	0.51	**750**	**5.6**	5.6	71
	02/24/16	8015D/300.0	*<1.0**	*<0.05**	*<5.0**	0.47	**790**	**4.7**	4.7	74
	11/05/15	8015D/300.0	*<1.0**	*<0.05**	*<5.0**	0.35	**830**	**4.2**	4.2	68
	08/21/15	8015D/300.0	*<1.0**	*<0.05**	*<5.0**	<0.5	**900**	**5.6**	5.6	79
	06/09/15	8015D	*<1.0**	*<0.05**	*<5.0**	NA	NA	NA	NA	NA
	03/12/15	8015D	*<1.0**	*<0.05**	*<5.0**	NA	NA	NA	NA	NA
	11/18/14	8015D	*<1.0**	*<0.05**	*<5.0**	NA	NA	NA	NA	NA

8.17.1 MKTF WELLS
DRO/GRO/MRO and General Chemistry Analytical Results

			PARAMETERS							
STANDARDS			DRO (mg/L)	GRO (mg/L)	MRO (mg/L)	Fluoride (mg/L)	Chloride (mg/L)	Nitrite (mg/L)	Nitrate (mg/L)	Sulfate (mg/L)
WQCC 20 NMAC 6.2.3103 (DEC 2018)			NE	NE	NE	**1.6**	**250.0**	**1**	**10**	**600.0**
40 CFR 141.62 MCL			NE	NE	NE	4	NE	1	10	NE
NMED Tap Water (JUNE 2019)			NE	NE	NE	1.18	NE	1.97	31.60	NE
EPA RSL for Tap Water (NOVEMBER 2019)			NE	NE	NE	0.8	NE	2	32	NE
NMED SSG (JUNE 2019)			**0.0167**	**0.0101**	**0.0858**	NE	NE	NE	NE	NE
WELL ID	DATE SAMPLED	METHOD								
MKTF-42	10/23/19	8015D/300.0	**8.6**	**0.14**	*<2.5**	0.78	**940**	<0.5	<0.5	83
	08/22/19	8015D/300.0	**57**	**0.22**	*<5.0**	0.82	**1000**	0.85	<0.5	89
	05/07/19	8015D/300.0	**59**	**0.16**	*<5.0**	0.88	**1100**	0.91	0.07	89
	02/13/19	8015D/300.0	**67**	**0.34**	*<5.0**	1	**1100**	<0.5	0.15	87
	11/15/18	8015D/300.0	**63**	**0.56**	*<5.0**	0.89	**1100**	<0.5	<0.5	87
	08/29/18	8015D/300.0	**64**	**0.21**	*<5.0**	0.94	**1000**	*<1.0**	<1.0	98
	05/09/18	8015D/300.0	**72**	**0.4**	*<5.0**	0.47	**920**	*<1.0**	<1.0	95
	02/07/18	8015D/300.0	**79**	**0.46**	*<5.0**	0.43	**810**	*<1.0**	<1.0	92
	11/27/17	8015D/300.0	**77**	**0.19**	*<5.0**	<0.5	**850**	*<1.0**	<1.0	110
	09/25/17	8015D/300.0	**72**	**0.21**	*<50**	0.6	**820**	*<1.0**	<1.0	100
	06/06/17	8015D/300.0	**72**	**0.15**	*<5.0**	0.47	**880**	*<1.0**	<1.0	110
	03/07/17	8015D/300.0	**79**	**0.14**	*<5.0**	0.68	**820**	*<1.0**	<1.0	110
	10/31/16	8015D/300.0	**62**	**0.11**	*<5.0**	<0.5	**900**	*<2.0**	<2.0	110
	09/09/16	8015D/300.0	**62**	**0.7**	*<5.0**	0.43	**880**	*<1.0**	<1.0	110
	06/09/16	8015D/300.0	**60**	**0.16**	*<5.0**	0.68	**890**	*<1.0**	<1.0	130
	02/24/16	8015D/300.0	**52**	**0.12**	*<5.0**	0.69	**860**	*<1.0**	<1.0	120
	11/05/15	8015D/300.0	**45**	**0.11**	*<5.0**	0.6	**870**	*<1.0**	<1.0	120
	08/21/15	8015D/300.0	**52**	**0.21**	*<5.0**	0.62	**930**	*<1.0**	<1.0	130
	06/09/15	8015D	**60**	**0.1**	*<5.0**	NA	NA	NA	NA	NA
	03/11/15	8015D	**27**	*<0.5**	*<5.0**	NA	NA	NA	NA	NA
	11/18/14	8015D	**44**	*<0.05**	*<5.0**	NA	NA	NA	NA	NA

8.17.1 MKTF WELLS
DRO/GRO/MRO and General Chemistry Analytical Results

			PARAMETERS							
STANDARDS			DRO (mg/L)	GRO (mg/L)	MRO (mg/L)	Fluoride (mg/L)	Chloride (mg/L)	Nitrite (mg/L)	Nitrate (mg/L)	Sulfate (mg/L)
WQCC 20 NMAC 6.2.3103 (DEC 2018)			NE	NE	NE	**1.6**	**250.0**	**1**	**10**	**600.0**
40 CFR 141.62 MCL			NE	NE	NE	4	NE	1	10	NE
NMED Tap Water (JUNE 2019)			NE	NE	NE	1.18	NE	1.97	31.60	NE
EPA RSL for Tap Water (NOVEMBER 2019)			NE	NE	NE	0.8	NE	2	32	NE
NMED SSG (JUNE 2019)			**0.0167**	**0.0101**	**0.0858**	NE	NE	NE	NE	NE
WELL ID	DATE SAMPLED	METHOD								
MKTF-43	10/24/19	8015D/300.0	<0.4*	*<0.05**	*<2.5**	<0.5	**5100**	*<2.0**	**12**	540
	08/22/19	8015D/300.0	*<1.0**	*<0.05**	*<5.0**	0.074	**5100**	*<2.0**	**18**	560
	05/08/19	8015D/300.0	*<1.0**	*<0.05**	*<5.0**	0.31	**3600**	*<2.0**	**19**	340
	02/13/19	8015D/300.0	*<1.0**	*<0.05**	*<5.0**	<0.5	**4300**	*<2.0**	**22**	410
	11/15/18	8015D/300.0	*<1.0**	*<0.05**	*<5.0**	<0.5	**2600**	*<2.0**	<2.5	290
	08/30/18	8015D/300.0	*<1.0**	*<0.05**	*<5.0**	0.38	**3200**	*<2.0**	8.5	260
	05/09/18	8015D/300.0	*<1.0**	*<0.05**	*<5.0**	*<2.0**	**7600**	**6.5**	6.5	**810**
	02/07/18	8015D/300.0	*<1.0**	*<0.05**	*<5.0**	<0.5	**8500**	**13**	**13**	**950**
	11/27/17	8015D/300.0	*<1.0**	*<0.05**	*<5.0**	<0.5	**12000**	**14**	**14**	**1200**
	09/25/17	8015D/300.0	*<1.0**	*<0.05**	*<5.0**	<0.5	**9500**	**13**	**13**	**1100**
	06/06/17	8015D/300.0	*<1.0**	*<0.05**	*<5.0**	*<2.0**	**12000**	**23**	**23**	**980**
	03/08/17	8015D/300.0	*<1.0**	*<0.05**	*<5.0**	*<2.0**	**13000**	**25**	**25**	**1000**
	10/31/16	8015D/300.0	*<1.0**	*<0.05**	*<5.0**	*<2.0**	**19000**	**62**	**62**	**1300**
	09/09/16	8015D/300.0	*<1.0**	0.026	*<5.0**	*<2.0**	**16000**	*<10**	*<10**	**1800**
	06/09/16	8015D/300.0	*<1.0**	*<0.05**	*<5.0**	*<2.0**	**15000**	*<10**	*<10**	**1300**
	02/24/16	8015D/300.0	*<1.0**	*<0.05**	*<5.0**	*<2.0**	**15000**	*<10**	*<10**	**1200**
	11/05/15	8015D/300.0	*<1.0**	*<0.05**	*<5.0**	*<2.0**	**16000**	*<10**	*<10**	**1600**
	08/21/15	8015D/300.0	*<1.0**	*<0.05**	*<5.0**	*<2.0**	**17000**	*<10**	*<10**	**1700**
	06/10/15	8015D	*<1.0**	*<0.05**	*<5.0**	NA	NA	NA	NA	NA
	03/11/15	8015D	*<1.0**	*<0.05**	*<5.0**	NA	NA	NA	NA	NA
	11/18/14	8015D	*<1.0**	*<0.05**	*<5.0**	NA	NA	NA	NA	NA

8.17.1 MKTF WELLS
DRO/GRO/MRO and General Chemistry Analytical Results

			PARAMETERS							
STANDARDS			DRO (mg/L)	GRO (mg/L)	MRO (mg/L)	Fluoride (mg/L)	Chloride (mg/L)	Nitrite (mg/L)	Nitrate (mg/L)	Sulfate (mg/L)
WQCC 20 NMAC 6.2.3103 (DEC 2018)			NE	NE	NE	**1.6**	**250.0**	**1**	**10**	**600.0**
40 CFR 141.62 MCL			NE	NE	NE	4	NE	1	10	NE
NMED Tap Water (JUNE 2019)			NE	NE	NE	1.18	NE	1.97	31.60	NE
EPA RSL for Tap Water (NOVEMBER 2019)			NE	NE	NE	0.8	NE	2	32	NE
NMED SSG (JUNE 2019)			**0.0167**	**0.0101**	**0.0858**	NE	NE	NE	NE	NE
WELL ID	DATE SAMPLED	METHOD								
MKTF-44	10/24/19	8015D/300.0	*<0.40**	*<0.05**	*<2.5**	<0.5	**810**	<0.5	<0.5	91
	08/22/19	8015D/300.0	*<1.0**	*<0.05**	*<5.0**	<0.5	**1500**	<0.5	9	84
	05/08/19	8015D/300.0	*<1.0**	*<0.05**	*<5.0**	<0.5	**2400**	*<2.0**	**14**	72
	02/13/19	8015D/300.0	*<1.0**	**0.022**	*<5.0**	<0.5	**1500**	0.35	9.9	89
	11/15/18	8015D/300.0	*<1.0**	*<0.05**	*<5.0**	<0.5	230	<0.5	0.57	100
	08/30/18	8015D/300.0	**1.7**	**0.015**	*<5.0**	0.17	**530**	<0.5	2.5	96
	05/10/18	8015D/300.0	*<1.0**	*<0.05**	*<5.0**	0.16	240	0.066	1.1	95
	02/08/18	8015D/300.0	*<1.0**	0.01	*<5.0**	<0.5	**390**	**2.1**	2.1	100
	11/28/17	8015D/300.0	*<1.0**	**0.017**	*<5.0**	<0.5	**730**	**4.2**	4.2	91
	09/25/17	8015D/300.0	*<1.0**	*<0.05**	*<5.0**	<0.5	**1100**	**7**	7	85
	06/05/17	8015D/300.0	*<1.0**	*<0.05**	*<5.0**	<0.1	**1300**	**7.6**	7.6	80
	03/08/17	8015D/300.0	*<1.0**	*<0.05**	*<5.0**	<0.1	**3500**	**26**	**26**	59
	11/01/16	8015D/300.0	*<1.0**	*<0.05**	*<5.0**	0.32	150	0.81	0.81	100
	09/09/16	8015D/300.0	*<1.0**	**0.023**	*<5.0**	0.36	**310**	**1.8**	1.8	97
	06/09/16	8015D/300.0	*<1.0**	*<0.05**	*<5.0**	0.29	**610**	**3.6**	3.6	96
	02/24/16	8015D/300.0	*<1.0**	*<0.05**	*<5.0**	0.45	**270**	**1.1**	1.1	100
	11/09/15	8015D/300.0	*<1.0**	*<0.05**	*<5.0**	0.56	91	<0.5	0.75	110
	08/17/15	8015D/300.0	*<1.0**	*<0.1**	*<5.0**	0.58	110	*<1.0**	<1.0	120
	06/10/15	8015D	*<1.0**	*<0.05**	*<5.0**	NA	NA	NA	NA	NA
	03/12/15	8015D	*<1.0**	*<0.05**	*<5.0**	NA	NA	NA	NA	NA
	11/21/14	8015D	*<1.0**	*<0.05**	*<5.0**	NA	NA	NA	NA	NA
MKTF-45			SPH Detected - No samples were collected.							
MKTF-46	12/03/19	8015D/300.0	*<0.40**	*<0.05**	*<2.5**	0.45	**740**	<0.5	9.6	230
MKTF-47	12/03/19	8015D/300.0	*<0.40**	*<0.05**	*<2.5**	0.85	**260**	<0.5	**11**	350
MKTF-48	12/03/19	8015D/300.0	**0.69**	**0.17**	*<2.5**	1.1	180	<0.5	<0.5	20
MKTF-49	12/03/19	8015D/300.0	**1**	**82**	*<2.5**	<0.5	**1300**	<0.5	<0.5	<2.5

8.17.1 MKTF WELLS
DRO/GRO/MRO and General Chemistry Analytical Results

STANDARDS			PARAMETERS							
			DRO (mg/L)	GRO (mg/L)	MRO (mg/L)	Fluoride (mg/L)	Chloride (mg/L)	Nitrite (mg/L)	Nitrate (mg/L)	Sulfate (mg/L)
WQCC 20 NMAC 6.2.3103 (DEC 2018)			NE	NE	NE	**1.6**	**250.0**	**1**	**10**	**600.0**
40 CFR 141.62 MCL			NE	NE	NE	4	NE	1	10	NE
NMED Tap Water (JUNE 2019)			NE	NE	NE	1.18	NE	1.97	31.60	NE
EPA RSL for Tap Water (NOVEMBER 2019)			NE	NE	NE	0.8	NE	2	32	NE
NMED SSG (JUNE 2019)			**0.0167**	**0.0101**	**0.0858**	NE	NE	NE	NE	NE
WELL ID	**DATE SAMPLED**	**METHOD**								
MKTF-50	12/03/19	8015D/300.0	**0.63**	**34**	*<2.5**	**1.7**	**260**	<0.5	<0.5	57

DEFINITIONS
NE = Not established
NA = Not analyzed
Bold and highlighted values represent values above the applicable standards

STANDARDS
WQCC 20 NMAC 6.2.3103 - Standards for Ground Water of 10,000 mg/l TDS Concentration or Less.
a) Human Health Standards; b) Other Standards for Domestic Water
40 CFR 141.62 Maximum Contaminant Levels for Inorganic Contaminants
NMED Risk Assessment Guidance for Investigations and Remediations Table A-1
EPA Regional Screening Level (RSL) Summary Table
NMED Soil Screening Guidance Volume 1, Table 6-4 (groundwater)

NOTES
Wells marked in red were not sampled because of SPH, well was dry, or well was inaccessible.
Items notes with a * and italics have a detection limit greater than or equal to the applicable standard.
Items highlighted were analyzed by nitrogen, nitrate & nitrite and the result is reported for both.

8.17.2 MKTF WELLS
Total Metals Analytical Result Summary

STANDARDS			PARAMETERS												
			Arsenic (mg/L)	Barium (mg/L)	Cadmium (mg/L)	Chromium (mg/L)	Copper (mg/L)	Iron (mg/L)	Lead (mg/L)	Manganese (mg/L)	Selenium (mg/L)	Silver (mg/L)	Mercury (ug/L)	Uranium (mg/L)	Zinc (mg/L)
WQCC 20 NMAC 6.2.3103 (DEC 2018)			**0.01**	**2**	**0.005**	**0.05**	**1**	**1**	**0.015**	**0.2**	**0.05**	**0.05**	**2**	**0.03**	**10**
40 CFR 141.62 MCL			0.01	2	0.005	0.1	1.3	NE	0.015	NE	0.05	NE	2	0.03	NE
NMED Tap Water (JUNE 2019)			0.000855	3.28	0.00624	0.0057	0.7898	13.8	NE	2.02	0.0987	0.0812	0.626	0.0592	5.96
EPA RSL for Tap Water (NOVEMBER 2019)			0.000052	3.8	0.0092	NE	0.8	14	0.015	0.43	0.1	0.094	0.63	0.004	6
WELL ID	**DATE SAMPLED**	**METHOD**													
MKTF-1	Second half 2016-2019	--	SPH Detected - No samples were collected.												
	02/24/16	200.7/200.8	0.002	**3.3**	<0.002	<0.006	<0.006	**5.5**	0.0011	**2.2**	0.0028	<0.005	<0.2	0.00029	0.0099
	11/04/15	200.7/200.8	<0.005	**3**	<0.002	<0.006	<0.006	**8.3**	0.0069	**2.1**	0.0082	<0.005	<0.2	0.00061	0.016
	08/21/15	200.7/200.8	0.0033	**2.8**	<0.002	<0.006	<0.006	**8.7**	0.0062	**2.1**	<0.01	<0.005	<0.2	0.00078	0.014
	06/09/15	200.7/200.8	0.0034	**2.4**	<0.002	0.0065	<0.006	**8.1**	0.0042	**2.2**	0.0045	<0.005	<0.2	<0.0005	0.015
	03/11/15	200.7/200.8	0.0032	**2.1**	<0.002	<0.006	<0.006	**5.6**	0.002	**1.9**	0.0056	<0.005	<0.2	<0.001	<0.01
	06/06/14	200.7/200.8	0.007	**4.7**	<0.002	0.035	0.038	**35**	**0.074**	**4.1**	0.0091	<0.005	<0.2	<0.005	0.078
MKTF-2	11/19/19	200.7/200.8	*<0.02**	0.33	<0.002	0.0046	0.0053	**5.7**	0.0054	**2.9**	<0.02	0.0059	<0.2	**0.044**	0.014
	08/23/19	200.7/200.8	0.006	0.86	<0.002	0.0055	0.0072	**9.1**	0.009	**2.3**	<0.005	0.0031	0.11	**0.031**	0.023
	05/06/19	200.7/200.8	0.0033	0.99	<0.002	<0.006	<0.006	**3.9**	<0.0025	**1.9**	<0.005	0.0043	<0.2	0.017	<0.01
	03/28/19	200.7/200.8	0.0026	1	<0.002	<0.006	<0.006	**1.6**	0.00022	**1.5**	0.00059	0.0025	0.087	0.023	<0.01
	11/28/18	200.7/200.8	0.0019	0.44	<0.002	<0.006	<0.006	0.24	0.00059	**0.74**	<0.001	0.0029	NA	NA	0.0035
	08/20/18	200.7/200.8	0.003	0.27	<0.002	<0.006	<0.006	0.2	0.00051	**0.52**	<0.001	0.002	<0.2	**0.038**	0.0044
	05/01/18	200.7/200.8	0.0025	0.26	<0.002	<0.006	<0.0006	0.36	0.00065	**0.62**	<0.005	<0.005	0.053	0.023	<0.01
	02/06/18	200.7/200.8	<0.005	0.28	<0.002	<0.006	<0.006	0.57	0.0009	**0.61**	<0.01	0.0016	0.075	**0.032**	<0.01
	11/20/17	200.7/200.8	0.0034	0.26	<0.002	<0.006	<0.006	0.23	0.00062	**0.6**	<0.005	<0.005	<0.2	**0.036**	<0.01
	10/03/17	200.7/200.8	0.0054	0.34	<0.002	<0.006	0.004	**3**	0.002	**0.91**	0.0056	<0.005	<0.2	NA	0.0085
	03/16/17	200.7/200.8	0.004	0.35	<0.002	<0.006	<0.006	**1.4**	0.0017	**0.74**	0.0082	<0.005	<0.2	0.024	0.0063
	10/28/16	200.7/200.8	0.003	0.22	<0.002	<0.006	<0.006	**1.5**	0.0027	**0.53**	0.0048	<0.005	<0.2	0.026	0.038
	09/07/16	200.7/200.8	0.0041	0.32	<0.002	0.0054	0.0038	**5.9**	0.0089	**0.65**	0.0064	<0.005	<0.2	**0.038**	0.018
	06/10/16	200.7/200.8	0.0024	0.19	<0.002	0.0027	<0.006	**2.6**	0.0034	**0.4**	0.0046	<0.005	<0.2	**0.033**	0.012
	02/24/16	200.7/200.8	0.0045	0.73	<0.002	0.0098	0.018	**14**	**0.023**	**1.1**	0.0033	<0.005	<0.2	**0.063**	0.057
	11/04/15	200.7/200.8	0.0043	0.17	<0.002	<0.006	<0.006	0.25	0.0038	**0.44**	*<0.05**	<0.005	<0.2	**0.032**	0.012
	08/21/15	200.7/200.8	0.0044	0.28	<0.002	0.0073	0.0089	**8.6**	0.0088	**0.81**	0.0026	<0.005	<0.2	**0.05**	0.033
	06/09/15	200.7/200.8	0.0035	0.14	<0.002	<0.006	<0.006	**1.6**	0.0023	**0.55**	0.0028	<0.005	<0.2	**0.032**	<0.01
	03/11/15	200.7/200.8	0.0046	0.21	<0.002	<0.006	0.0074	**4.6**	0.0057	**0.64**	0.0043	<0.005	<0.2	**0.048**	0.017
	11/14/14	200.7/200.8	0.0059	0.22	<0.002	<0.006	0.012	**7**	0.0079	**0.68**	<0.01	<0.005	<0.2	**0.073**	0.03
	09/18/14	200.7/200.8	0.0017	0.15	<0.002	<0.006	<0.006	0.15	<0.001	**0.57**	0.0031	<0.005	<0.2	0.013	<0.01
	06/06/14	200.7/200.8	<0.005	0.2	<0.002	<0.006	<0.006	**4.2**	<0.005	**0.7**	0.0069	<0.005	<0.2	**0.056**	0.017
MKTF-3			SPH Detected - No samples were collected.												

8.17.2 MKTF WELLS

Total Metals Analytical Result Summary

STANDARDS			PARAMETERS												
			Arsenic (mg/L)	Barium (mg/L)	Cadmium (mg/L)	Chromium (mg/L)	Copper (mg/L)	Iron (mg/L)	Lead (mg/L)	Manganese (mg/L)	Selenium (mg/L)	Silver (mg/L)	Mercury (ug/L)	Uranium (mg/L)	Zinc (mg/L)
WQCC 20 NMAC 6.2.3103 (DEC 2018)			**0.01**	**2**	**0.005**	**0.05**	**1**	**1**	**0.015**	**0.2**	**0.05**	**0.05**	**2**	**0.03**	**10**
40 CFR 141.62 MCL			0.01	2	0.005	0.1	1.3	NE	0.015	NE	0.05	NE	2	0.03	NE
NMED Tap Water (JUNE 2019)			0.000855	3.28	0.00624	0.0057	0.7898	13.8	NE	2.02	0.0987	0.0812	0.626	0.0592	5.96
EPA RSL for Tap Water (NOVEMBER 2019)			0.000052	3.8	0.0092	NE	0.8	14	0.015	0.43	0.1	0.094	0.63	0.004	6
WELL ID	**DATE SAMPLED**	**METHOD**													
MKTF-4	10/30/19	200.7/200.8	0.0097	**3.6**	<0.002	<0.006	<0.006	**7.6**	0.00052	**1.6**	<0.005	0.0017	<0.2	NA	<0.01
	08/21/19	200.7/200.8	0.0084	2	<0.002	0.0042	0.0055	**5.9**	0.0064	**2.2**	0.0014	<0.005	<0.2	0.0084	0.0094
	05/13/19	200.7/200.8	0.0086	**3.4**	<0.002	<0.006	<0.006	**8**	0.0008	**1.6**	0.00073	0.0017	<0.2	0.0017	<0.01
	03/26/19	200.7/200.8	0.01	**3.4**	<0.002	<0.006	<0.006	**6.8**	0.00094	**1.5**	0.00071	0.0015	0.057	0.0023	<0.01
	11/20/18	200.7/200.8	**0.011**	**4.1**	<0.002	<0.006	<0.006	**5.1**	0.00039	**2.3**	<0.001	0.0034	<0.2	NA	0.0057
	09/04/18	200.7/200.8	**0.014**	**2.9**	<0.002	<0.006	<0.006	**5.7**	0.00055	**1.4**	<0.001	0.0022	<0.2	0.0041	0.0054
	05/02/18	200.7/200.8	**0.013**	**3**	<0.002	<0.006	0.0042	**5.3**	0.001	**1.7**	<0.001	0.0013	<0.2	0.004	0.0062
	02/14/18	200.7/200.8	0.0069	**2.8**	<0.002	<0.006	<0.006	**5.2**	0.0007	**1.5**	0.0083	0.0021	<0.2	0.0042	<0.01
	11/28/17	200.7/200.8	**0.015**	**3.5**	<0.002	<0.006	<0.006	**7**	0.00041	**1.3**	0.0062	0.0013	NA	0.0019	<0.01
	09/26/17	200.7/200.8	**0.019**	**3.8**	<0.002	<0.006	<0.006	**9.4**	0.0018	**1.4**	0.011	<0.005	<0.2	NA	0.0045
	06/08/17	200.7/200.8	**0.011**	**3**	<0.002	<0.006	<0.006	**5**	0.0012	**1.5**	0.012	<0.005	0.067	0.0035	0.005
	03/02/17	200.7/200.8	**0.012**	**3.2**	<0.002	<0.006	<0.006	**8.2**	0.0019	**1.5**	0.01	<0.005	0.15	NA	0.0087
	11/02/16	200.7/200.8	0.01	**2.8**	<0.002	<0.006	<0.006	**4.6**	0.00063	**1.5**	0.01	<0.005	<0.2	0.0041	0.006
	09/11/16	200.7/200.8	0.01	**3.4**	<0.002	<0.006	<0.006	**6.7**	0.003	**1.5**	0.014	<0.005	<0.2	0.0028	0.0072
	06/09/16	200.7/200.8	0.0089	**3.1**	<0.002	<0.006	<0.006	**6.2**	0.0019	**1.7**	0.0098	<0.005	<0.2	0.0048	0.016
	02/29/16	200.7/200.8	0.0081	**3**	<0.002	<0.006	<0.006	**5.6**	0.0036	**1.5**	0.0043	<0.005	<0.2	0.0042	0.022
	11/03/15	200.7/200.8	**0.014**	**3.4**	<0.002	<0.006	<0.006	**16**	0.0063	**1.7**	0.016	<0.005	<0.2	0.0019	0.012
	08/18/15	200.7/200.8	0.0085	**3**	<0.002	<0.006	0.0061	**17**	**0.017**	**1.9**	<0.01	<0.005	<0.2	0.0042	0.025
	06/04/15	200.7/200.8	0.0082	**2.5**	<0.002	0.0087	<0.006	**13**	0.0097	**1.9**	<0.01	<0.005	<0.2	0.0053	0.017
	03/16/15	200.7/200.8	*<0.01**	1.8	<0.002	0.0092	0.012	**11**	**0.022**	**2.5**	0.016	<0.005	<0.2	0.017	0.03
	11/13/14	200.7/200.8	0.0079	1.9	<0.002	0.0086	0.015	**15**	**0.023**	**2.5**	*<0.05**	<0.005	<0.2	0.013	0.03
	09/15/14	200.7/200.8	0.006	2	<0.002	0.015	0.021	**20**	**0.036**	**2.9**	0.0078	<0.005	<0.2	0.02	0.044
	06/04/14	200.7/200.8	0.0061	1.4	<0.002	0.0085	0.013	**7.9**	0.013	**2.1**	0.013	<0.005	<0.2	0.009	0.02
MKTF-5			SPH Detected - No samples were collected.												
MKTF-6			SPH Detected - No samples were collected.												
MKTF-7			SPH Detected - No samples were collected.												
MKTF-8			SPH Detected - No samples were collected.												

8.17.2 MKTF WELLS

Total Metals Analytical Result Summary

STANDARDS			PARAMETERS												
			Arsenic (mg/L)	Barium (mg/L)	Cadmium (mg/L)	Chromium (mg/L)	Copper (mg/L)	Iron (mg/L)	Lead (mg/L)	Manganese (mg/L)	Selenium (mg/L)	Silver (mg/L)	Mercury (ug/L)	Uranium (mg/L)	Zinc (mg/L)
WQCC 20 NMAC 6.2.3103 (DEC 2018)			**0.01**	**2**	**0.005**	**0.05**	**1**	**1**	**0.015**	**0.2**	**0.05**	**0.05**	**2**	**0.03**	**10**
40 CFR 141.62 MCL			0.01	2	0.005	0.1	1.3	NE	0.015	NE	0.05	NE	2	0.03	NE
NMED Tap Water (JUNE 2019)			0.000855	3.28	0.00624	0.0057	0.7898	13.8	NE	2.02	0.0987	0.0812	0.626	0.0592	5.96
EPA RSL for Tap Water (NOVEMBER 2019)			0.000052	3.8	0.0092	NE	0.8	14	0.015	0.43	0.1	0.094	0.63	0.004	6
WELL ID	**DATE SAMPLED**	**METHOD**													
MKTF-9	11/18/19	200.7/200.8	0.0031	0.69	<0.002	<0.006	<0.006	**3.4**	0.0014	**4.3**	<0.001	<0.0005	<0.2	0.0063	<0.01
	08/28/19	200.7/200.8	0.00086	0.52	<0.002	<0.006	<0.006	**4.5**	0.00084	**4.5**	<0.001	0.002	0.12	0.0012	<0.01
	05/13/19	200.7/200.8	0.0025	0.72	<0.002	<0.006	<0.006	**3.8**	0.0018	**4.8**	0.00062	0.0022	0.04	0.0017	<0.01
	03/26/19	200.7/200.8	0.0027	0.66	<0.002	<0.006	<0.006	**4.4**	0.0013	**4.2**	0.00059	0.0019	0.069	0.0023	<0.01
	11/28/18	200.7/200.8	0.0023	0.52	<0.002	<0.006	<0.006	**1.9**	0.0008	**3.9**	<0.001	0.0048	NA	NA	<0.01
	09/04/18	200.7/200.8	0.0028	0.57	<0.002	<0.006	<0.006	**1.8**	0.00072	**4.2**	<0.001	0.0035	<0.2	0.004	<0.01
	05/02/18	200.7/200.8	0.003	0.48	<0.002	<0.006	0.0052	**2.3**	0.0012	**4.4**	<0.001	0.0017	0.045	0.0044	<0.05
	02/14/18	200.7/200.8	0.0026	0.5	<0.002	<0.006	<0.006	**2.3**	0.0012	**3.9**	0.0041	0.0027	<0.2	0.0053	<0.01
	11/28/17	200.7/200.8	0.0067	0.65	<0.002	<0.006	<0.006	**2.4**	0.0014	**3.8**	<0.01	0.0025	NA	0.005	<0.01
	09/28/17	200.7/200.8	0.004	0.61	<0.002	<0.006	0.0064	**5.3**	0.0043	**4.8**	0.0085	<0.005	<0.2	NA	0.0072
	06/12/17	200.7/200.8	0.0025	0.6	<0.002	<0.006	<0.006	**3.5**	0.0028	**4.5**	0.0081	0.00046	<0.2	NA	0.003
	03/15/17	200.7/200.8	0.0052	0.59	<0.002	<0.006	0.0065	**5.2**	0.0043	**4.4**	0.0072	<0.005	<0.2	0.0036	0.0046
	11/02/16	200.7/200.8	0.0028	0.47	<0.002	<0.006	<0.006	**1.7**	0.0016	**3.6**	0.0058	<0.005	<0.2	0.0066	0.003
	09/11/16	200.7/200.8	0.0033	0.52	<0.002	<0.006	<0.006	**2.3**	0.0019	**3.8**	0.0068	<0.005	<0.2	0.0064	<0.01
	06/09/16	200.7/200.8	0.0023	0.49	<0.002	<0.006	<0.006	**2.1**	0.0015	**3.6**	0.0047	<0.005	<0.2	0.0069	<0.01
	02/29/16	200.7/200.8	0.002	0.64	<0.002	<0.006	<0.006	**4**	0.004	**4.2**	0.0023	<0.005	<0.2	0.0048	0.012
	11/03/15	200.7/200.8	0.0045	0.71	<0.002	<0.006	<0.006	**8.8**	0.011	**4.3**	*<0.05**	<0.005	<0.2	0.0051	0.019
	08/18/15	200.7/200.8	0.0042	0.81	<0.002	<0.006	0.0089	**7.7**	0.015	**3.7**	<0.005	<0.005	<0.2	0.0053	0.027
	06/04/15	200.7/200.8	<0.005	0.34	<0.002	<0.006	<0.006	**3.1**	<0.005	**3**	<0.005	<0.005	<0.2	0.0076	<0.01
	03/16/15	200.7/200.8	0.0029	0.22	<0.002	<0.002	<0.002	**2**	0.0015	**2.4**	0.0053	<0.005	<0.2	0.014	0.01
	11/14/14	200.7/200.8	<0.005	0.39	<0.002	<0.006	<0.006	**4.5**	0.0053	**2.7**	<0.01	<0.005	<0.2	0.01	0.013
	09/18/14	200.7/200.8	<0.005	0.33	<0.002	<0.006	<0.006	**2.4**	<0.001	**2.8**	<0.005	<0.005	<0.2	0.012	<0.01
	06/05/14	200.7/200.8	<0.005	0.58	<0.002	<0.006	<0.006	**6.7**	0.0058	**3.8**	0.0073	<0.005	<0.2	0.006	0.015

8.17.2 MKTF WELLS

Total Metals Analytical Result Summary

STANDARDS			PARAMETERS												
			Arsenic (mg/L)	Barium (mg/L)	Cadmium (mg/L)	Chromium (mg/L)	Copper (mg/L)	Iron (mg/L)	Lead (mg/L)	Manganese (mg/L)	Selenium (mg/L)	Silver (mg/L)	Mercury (ug/L)	Uranium (mg/L)	Zinc (mg/L)
WQCC 20 NMAC 6.2.3103 (DEC 2018)			**0.01**	**2**	**0.005**	**0.05**	**1**	**1**	**0.015**	**0.2**	**0.05**	**0.05**	**2**	**0.03**	**10**
40 CFR 141.62 MCL			0.01	2	0.005	0.1	1.3	NE	0.015	NE	0.05	NE	2	0.03	NE
NMED Tap Water (JUNE 2019)			0.000855	3.28	0.00624	0.0057	0.7898	13.8	NE	2.02	0.0987	0.0812	0.626	0.0592	5.96
EPA RSL for Tap Water (NOVEMBER 2019)			0.000052	3.8	0.0092	NE	0.8	14	0.015	0.43	0.1	0.094	0.63	0.004	6
WELL ID	**DATE SAMPLED**	**METHOD**													
MKTF-10	10/30/19	200.7/200.8	0.0093	**11**	<0.002	<0.006	<0.006	**15**	0.00086	**6.3**	<0.005	0.0045	<0.2	NA	<0.01
	08/22/19	200.7/200.8	0.0082	**8.8**	<0.002	0.006	<0.006	**11**	0.00058	**5.6**	<0.001	0.0032	0.092	0.00061	<0.01
	05/13/19	200.7/200.8	0.0051	**4.9**	<0.002	<0.006	<0.006	**8.9**	0.00045	**3.6**	0.00063	0.0017	<0.2	0.00011	<0.01
	03/26/19	200.7/200.8	0.0053	**4.3**	<0.002	<0.006	<0.006	**8.9**	0.00067	**3.1**	<0.001	0.0018	0.078	0.00017	<0.01
	11/20/18	200.7/200.8	**0.011**	**4.3**	<0.002	<0.006	<0.006	**8.3**	0.0008	**3**	<0.001	0.0035	<0.2	NA	0.0037
	09/04/18	200.7/200.8	**0.011**	**4**	<0.002	<0.006	<0.006	**7.7**	0.00053	**2.8**	<0.001	0.0028	<0.2	0.00021	<0.01
	05/02/18	200.7/200.8	0.0088	**4.7**	<0.002	<0.006	<0.006	**11**	0.00034	**3.9**	<0.001	<0.005	0.059	0.00011	<0.01
	02/14/18	200.7/200.8	0.008	**4.5**	<0.002	<0.006	<0.006	**12**	0.0013	**3.6**	0.0034	0.0025	<0.2	0.00035	0.005
	11/28/17	200.7/200.8	0.0099	**4.2**	<0.002	<0.006	<0.006	**9.8**	0.00093	**3**	<0.01	0.0017	NA	<0.005	<0.01
	09/28/17	200.7/200.8	0.007	**4.1**	<0.002	<0.006	0.0038	**9**	0.001	**3**	0.004	<0.005	<0.2	NA	<0.01
	06/08/17	200.7/200.8	0.0082	**4.1**	<0.002	<0.006	<0.006	**8.3**	0.0021	**3.2**	0.0039	<0.005	0.065	0.00055	0.0083
	03/02/17	200.7/200.8	**0.014**	**4.7**	<0.002	<0.006	<0.006	**15**	0.0051	**3.5**	0.0047	<0.005	0.15	NA	0.0091
	11/02/16	200.7/200.8	0.0096	**6**	<0.002	<0.006	<0.006	**10**	0.0011	**5.2**	0.0049	<0.005	<0.2	0.00086	0.0044
	09/11/16	200.7/200.8	0.0083	**11**	<0.002	<0.006	<0.006	**26**	0.0018	**12**	0.0058	<0.005	<0.2	0.0012	0.0027
	06/09/16	200.7/200.8	0.006	**13**	<0.002	<0.006	<0.006	**36**	0.002	**15**	0.0033	<0.005	<0.2	0.0008	0.019
	02/29/16	200.7/200.8	0.0086	**16**	<0.002	<0.006	<0.006	**57**	0.0027	**21**	0.002	<0.005	<0.2	0.0015	0.014
	11/03/15	200.7/200.8	0.0059	**14**	<0.002	<0.006	<0.006	**61**	**0.025**	**19**	*<0.05**	<0.005	<0.2	0.0019	0.032
	08/18/15	200.7/200.8	**0.038**	**15**	<0.002	0.013	<0.006	**64**	**0.58**	**22**	*<0.05**	<0.005	0.3	**0.063**	0.49
	06/04/15	200.7/200.8	**0.015**	**19**	<0.002	**0.077**	0.1	**120**	**0.19**	**24**	<0.01	<0.005	<0.2	0.014	0.15
	03/16/15	200.7/200.8	**0.019**	**22**	<0.002	0.036	0.095	**100**	**0.2**	**27**	<0.01	<0.005	<0.2	0.019	0.14
	11/14/14	200.7/200.8	*<0.04**	**45**	<0.004	**0.099**	0.24	**250**	**0.58**	**49**	<0.04	<0.01	<0.4	**0.052**	0.31
	09/18/14	200.7/200.8	<0.005	**12**	<0.002	<0.006	<0.006	**46**	0.0015	**15**	0.0032	<0.005	<0.2	0.0013	<0.01
	06/06/14	200.7/200.8	<0.005	**7.7**	<0.002	<0.006	<0.006	**25**	<0.005	**9.5**	0.0061	<0.005	<0.2	<0.005	<0.01

8.17.2 MKTF WELLS

Total Metals Analytical Result Summary

STANDARDS			PARAMETERS												
			Arsenic (mg/L)	Barium (mg/L)	Cadmium (mg/L)	Chromium (mg/L)	Copper (mg/L)	Iron (mg/L)	Lead (mg/L)	Manganese (mg/L)	Selenium (mg/L)	Silver (mg/L)	Mercury (ug/L)	Uranium (mg/L)	Zinc (mg/L)
WQCC 20 NMAC 6.2.3103 (DEC 2018)			0.01	2	0.005	0.05	1	1	0.015	0.2	0.05	0.05	2	0.03	10
40 CFR 141.62 MCL			0.01	2	0.005	0.1	1.3	NE	0.015	NE	0.05	NE	2	0.03	NE
NMED Tap Water (JUNE 2019)			0.000855	3.28	0.00624	0.0057	0.7898	13.8	NE	2.02	0.0987	0.0812	0.626	0.0592	5.96
EPA RSL for Tap Water (NOVEMBER 2019)			0.000052	3.8	0.0092	NE	0.8	14	0.015	0.43	0.1	0.094	0.63	0.004	6
WELL ID	DATE SAMPLED	METHOD													
MKTF-11	10/30/19	200.7/200.8	0.022	2.3	<0.002	<0.006	<0.006	4.9	0.00066	2.5	<0.005	0.0027	<0.2	NA	<0.01
	08/21/19	200.7/200.8	0.02	1.8	<0.002	<0.006	<0.006	3.9	0.00054	1.9	0.00059	<0.005	0.12	0.004	<0.01
	05/13/19	200.7/200.8	0.018	2.3	<0.002	<0.006	<0.006	5	0.00063	2.6	<0.001	0.0019	0.047	0.0045	<0.01
	03/26/19	200.7/200.8	0.011	2.2	<0.002	<0.006	<0.006	3.8	0.00042	2.3	<0.001	0.0018	0.07	0.0048	<0.01
	11/20/18	200.7/200.8	0.013	3.3	<0.002	<0.006	<0.006	5.9	0.00042	4	<0.001	0.0056	<0.2	NA	0.0058
	09/04/18	200.7/200.8	0.016	2.9	<0.002	<0.006	<0.006	7.4	<0.0025	4	<0.005	0.0041	<0.2	0.0068	<0.01
	05/02/18	200.7/200.8	0.016	3	<0.002	<0.006	0.0054	7.8	<0.0025	3.8	<0.005	<0.005	<0.2	0.0042	<0.01
	02/08/18	200.7/200.8	0.012	2.6	<0.002	<0.006	<0.006	7.4	0.00066	3	0.0039	0.003	0.071	0.0047	0.0043
	11/28/17	200.7/200.8	0.016	3	<0.002	<0.006	<0.006	7.6	<0.0025	3.2	<0.005	0.0019	NA	0.0054	<0.01
	09/26/17	200.7/200.8	0.013	3.1	<0.002	<0.006	<0.006	12	0.0034	3.3	0.0063	<0.005	<0.2	NA	0.0086
	06/08/17	200.7/200.8	0.014	2.2	<0.002	<0.006	<0.006	6.1	0.00084	2.7	0.0031	<0.005	0.065	0.003	0.0055
	03/02/17	200.7/200.8	0.019	2.3	<0.002	<0.006	<0.006	6.7	0.00063	3.1	0.0037	<0.005	0.15	NA	0.0038
	11/02/16	200.7/200.8	0.014	2.7	<0.002	<0.006	<0.006	8.4	0.0011	4	0.005	<0.005	<0.2	0.0065	0.017
	09/11/16	200.7/200.8	0.013	2.9	<0.002	<0.006	<0.006	7.1	0.0011	4.1	0.0054	<0.005	<0.2	0.0065	0.012
	06/09/16	200.7/200.8	0.012	3.4	<0.002	<0.006	<0.006	8.1	0.0013	4	0.0031	<0.005	<0.2	0.0091	0.016
	02/29/16	200.7/200.8	0.013	3.9	<0.002	<0.006	<0.006	11	0.0027	6.4	0.0021	<0.005	<0.2	0.0054	0.018
	11/03/15	200.7/200.8	0.0078	3.8	<0.002	<0.006	<0.006	15	0.0031	3.5	0.0054	<0.005	<0.2	0.00073	0.017
	08/18/15	200.7/200.8	0.0091	2.4	<0.002	<0.006	<0.006	14	0.0071	4	0.003	<0.005	<0.2	0.0026	0.024
	06/04/15	200.7/200.8	0.0056	2.7	<0.002	<0.006	<0.006	0.013	0.0027	3	<0.005	<0.005	<0.2	<0.0025	0.013
	03/16/15	200.7/200.8	0.0086	1.9	<0.002	<0.006	<0.006	10	0.0068	3.1	0.006	<0.005	<0.2	0.0021	0.024
	11/13/14	200.7/200.8	0.0087	1.7	<0.002	<0.006	<0.006	5.8	<0.005	3.4	<0.005	<0.005	<0.2	<0.005	0.012
	09/15/14	200.7/200.8	0.0072	1.4	<0.002	<0.006	<0.006	8.1	0.0062	3.1	0.0029	<0.005	<0.2	0.0058	0.021
	06/05/14	200.7/200.8	0.0063	1.2	<0.002	0.0061	<0.006	8.8	0.0096	2.8	0.0055	<0.005	<0.2	<0.005	0.038
MKTF-12			SPH Detected - No samples were collected.												
MKTF-13	10/29/19	200.7/200.8	0.0033	6.8	<0.002	<0.006	<0.006	20	0.00061	4.7	<0.005	0.0031	NA	NA	<0.01
	08/20/19	--	SPH Detected - No samples were collected.												
	05/09/19	200.7/200.8	0.0057	6.4	<0.002	<0.006	0.0068	35	0.016	6.1	0.0017	0.0021	0.046	0.001	0.022
	03/26/19	200.7/200.8	0.0039	5.8	<0.002	<0.006	<0.006	25	0.0067	4.7	0.00049	<0.005	0.14	0.00075	0.0092
	11/28/18	200.7/200.8	0.0044	5.9	<0.002	<0.006	<0.006	16	0.0008	4.4	<0.001	0.006	NA	NA	<0.01
	08/30/18	200.7/200.8	0.0047	5.8	<0.002	<0.006	<0.006	19	0.00063	4.7	<0.001	0.0042	0.038	0.00029	0.0068
	05/10/18	200.7/200.8	0.0027	5.7	<0.002	<0.006	<0.006	17	0.00067	4.6	0.0031	0.0038	0.046	0.00043	<0.01
	03/15/17	200.7/200.8	0.0056	5	<0.002	<0.006	<0.006	18	0.0021	4.1	0.0075	<0.005	<0.2	0.00073	0.0048
MKTF-14			SPH Detected - No samples were collected.												

8.17.2 MKTF WELLS

Total Metals Analytical Result Summary

STANDARDS			PARAMETERS												
			Arsenic (mg/L)	Barium (mg/L)	Cadmium (mg/L)	Chromium (mg/L)	Copper (mg/L)	Iron (mg/L)	Lead (mg/L)	Manganese (mg/L)	Selenium (mg/L)	Silver (mg/L)	Mercury (ug/L)	Uranium (mg/L)	Zinc (mg/L)
WQCC 20 NMAC 6.2.3103 (DEC 2018)			**0.01**	**2**	**0.005**	**0.05**	**1**	**1**	**0.015**	**0.2**	**0.05**	**0.05**	**2**	**0.03**	**10**
40 CFR 141.62 MCL			0.01	2	0.005	0.1	1.3	NE	0.015	NE	0.05	NE	2	0.03	NE
NMED Tap Water (JUNE 2019)			0.000855	3.28	0.00624	0.0057	0.7898	13.8	NE	2.02	0.0987	0.0812	0.626	0.0592	5.96
EPA RSL for Tap Water (NOVEMBER 2019)			0.000052	3.8	0.0092	NE	0.8	14	0.015	0.43	0.1	0.094	0.63	0.004	6
WELL ID	**DATE SAMPLED**	**METHOD**													
MKTF-15	10/30/19	--	SPH Detected - No samples were collected.												
	08/21/19	--	SPH Detected - No samples were collected.												
	05/13/19	200.7/200.8	0.0081	**19**	<0.002	<0.006	<0.006	**31**	0.0058	**8.4**	0.0014	0.0064	<0.2	0.00058	0.016
	03/25/19	--	SPH Detected - No samples were collected.												
	11/19/18	--	SPH Detected - No samples were collected.												
	05/02/18	200.7/200.8	**0.016**	**33**	<0.002	<0.006	0.0075	**53**	0.0044	**18**	<0.01	0.0077	<0.2	<0.005	0.01
	11/28/17	200.7/200.8	**0.024**	**47**	<0.002	<0.0006	<0.006	**78**	0.0037	**25**	0.0079	0.012	NA	<0.0025	<0.01
	06/08/17	200.7/200.8	0.0072	**33**	<0.002	0.0011	<0.006	**65**	0.0098	**14**	0.0081	<0.005	0.074	0.0015	0.032
	03/02/17	200.7/200.8	0.0045	**29**	<0.002	<0.006	<0.006	**49**	0.0097	**9.6**	0.0058	<0.005	0.15	NA	0.027
	11/02/16	200.7/200.8	0.0037	**22**	<0.002	<0.006	<0.006	**34**	0.006	**6.8**	0.0069	<0.005	<0.2	<0.0025	0.28
	09/11/16	200.7/200.8	0.0022	**23**	<0.002	<0.006	<0.006	**35**	0.0059	**7.7**	0.0054	<0.005	<0.2	<0.0025	0.018
	06/09/16	--	SPH Detected - No samples were collected.												
	03/16/16	--	SPH Detected - No samples were collected.												
	09/17/15	200.7/200.8	<0.005	**29**	<0.002	<0.006	<0.006	**18**	<0.01	**9.8**	<0.005	<0.005	<0.2	<0.01	0.023
	1Q & 2Q 2015	--	SPH Detected - No samples were collected.												
	11/14/14	--	SPH Detected - No samples were collected.												
	06/05/14	200.7/200.8	*<0.01**	**25**	<0.002	0.0074	<0.006	**11**	0.011	**7.9**	<0.01	<0.005	<0.2	<0.005	0.017
MKTF-16	10/30/19	200.7/200.8	**0.012**	**4.7**	<0.002	<0.006	<0.006	**17**	0.0037	**4.9**	<0.01	0.0024	<0.2	NA	0.019
	08/30/19	200.7/200.8	**0.021**	**6.7**	<0.002	<0.006	<0.006	**24**	<0.0025	**6.8**	<0.001	<0.005	*<2**	0.0027	<0.01
	05/14/19	200.7/200.8	**0.012**	**3.5**	<0.002	<0.006	<0.006	**5.8**	0.0016	**3**	0.00076	<0.005	<0.2	0.0028	0.0079
	02/20/19	200.7/200.8	**0.014**	**2.4**	<0.002	0.0016	<0.006	**5.8**	0.005	**1.7**	<0.001	0.0016	<0.2	0.0023	0.027
	11/29/18	200.7/200.8	**0.018**	1.4	<0.002	<0.006	0.0065	**4.1**	0.0021	**1.5**	<0.001	0.0027	0.065	NA	0.023
	08/31/18	200.7/200.8	**0.019**	1.9	<0.002	<0.006	<0.006	**3.6**	0.0019	**1.7**	<0.005	0.0016	<0.2	0.0074	0.014
	05/11/18	200.7/200.8	**0.012**	**2.3**	<0.002	0.0031	0.0069	**4.3**	0.0037	**1.9**	0.0046	0.0015	<0.2	0.0093	0.026
	02/15/18	200.7/200.8	0.0071	1.6	<0.002	0.023	0.078	**18**	**0.025**	**0.8**	0.0025	<0.005	0.44	0.006	0.29
	11/29/17	200.7/200.8	**0.019**	**2.9**	<0.002	<0.006	<0.006	**5.2**	0.0012	**2.3**	0.011	0.0015	NA	0.0066	0.0079
	09/26/17	200.7/200.8	**0.016**	**2.7**	<0.002	<0.002	0.0021	**8.6**	0.002	**2.6**	0.019	<0.005	0.058	NA	0.0096
	06/08/17	200.7/200.8	**0.019**	**2.2**	<0.002	0.0018	0.0022	**3.4**	0.0033	**1.6**	0.014	<0.005	0.054	0.015	0.016
	03/14/17	200.7/200.8	**0.014**	1.9	<0.002	<0.006	0.0054	**6.3**	0.0058	**1.7**	0.0081	<0.005	NA	0.0024	0.025
	11/03/16	200.7/200.8	**0.015**	0.67	<0.002	<0.006	0.0038	**3.6**	0.0034	**0.86**	0.01	<0.005	<0.2	0.0077	0.02
	09/12/16	200.7/200.8	**0.014**	0.72	<0.002	<0.006	<0.006	**4.6**	0.0029	**0.96**	0.014	<0.005	<0.2	0.0067	0.022
	02/29/16	200.7/200.8	0.0092	1.3	<0.002	<0.006	<0.006	**6.5**	0.0031	**1.8**	0.0049	<0.005	<0.2	0.00066	0.034
	11/03/15	200.7/200.8	**0.018**	**3**	<0.002	<0.006	<0.006	**13**	0.0027	**3.9**	0.021	<0.005	<0.2	0.00053	0.023
	08/23/15	200.7/200.8	**0.014**	**3.9**	<0.002	<0.006	<0.006	**16**	0.0012	**5.5**	<0.02	<0.005	<0.2	<0.0005	0.01
	06/08/15	200.7/200.8	0.0097	**2.2**	<0.002	<0.006	0.0091	**12**	<0.0025	**3.3**	0.0072	<0.025	<0.2	<0.0025	0.023
	03/16/15	200.7/200.8	*<0.01**	1	<0.002	<0.006	0.023	**7.2**	<0.01	**1.3**	<0.02	<0.005	<0.2	<0.01	0.035
	11/18/14	200.7/200.8	0.01	1.1	<0.002	<0.006	<0.006	**10**	0.0042	**1.3**	*<0.05**	<0.005	<0.2	0.0016	0.05
	09/17/14	200.7/200.8	**0.012**	0.8	<0.002	<0.006	<0.006	**8.6**	0.0031	**1.2**	<0.01	<0.005	<0.2	<0.001	0.034
	06/05/14	200.7/200.8	**0.023**	0.9	<0.002	<0.006	0.008	**7.9**	<0.005	**1.2**	0.013	<0.005	<0.2	0.015	0.089

8.17.2 MKTF WELLS

Total Metals Analytical Result Summary

STANDARDS			PARAMETERS												
			Arsenic (mg/L)	Barium (mg/L)	Cadmium (mg/L)	Chromium (mg/L)	Copper (mg/L)	Iron (mg/L)	Lead (mg/L)	Manganese (mg/L)	Selenium (mg/L)	Silver (mg/L)	Mercury (ug/L)	Uranium (mg/L)	Zinc (mg/L)
WQCC 20 NMAC 6.2.3103 (DEC 2018)			**0.01**	**2**	**0.005**	**0.05**	**1**	**1**	**0.015**	**0.2**	**0.05**	**0.05**	**2**	**0.03**	**10**
40 CFR 141.62 MCL			0.01	2	0.005	0.1	1.3	NE	0.015	NE	0.05	NE	2	0.03	NE
NMED Tap Water (JUNE 2019)			0.000855	3.28	0.00624	0.0057	0.7898	13.8	NE	2.02	0.0987	0.0812	0.626	0.0592	5.96
EPA RSL for Tap Water (NOVEMBER 2019)			0.000052	3.8	0.0092	NE	0.8	14	0.015	0.43	0.1	0.094	0.63	0.004	6
WELL ID	**DATE SAMPLED**	**METHOD**													
MKTF-17	10/29/19	200.7/200.8	0.0068	1.8	<0.002	<0.006	<0.006	**4.8**	0.0012	**3.4**	<0.001	0.0025	<0.2	NA	0.0078
	08/20/19	200.7/200.8	0.007	1.1	<0.002	<0.006	<0.006	**3**	0.0005	**3**	<0.001	0.0019	<0.2	0.0036	<0.01
	05/09/19	200.7/200.8	0.0082	1.1	<0.002	0.0018	0.0067	**5.4**	0.0031	**3.1**	<0.001	0.0025	<0.2	0.0044	0.032
	03/26/19	200.7/200.8	0.0052	0.51	<0.002	<0.006	<0.006	**2.2**	0.00018	**2.8**	<0.001	0.002	<0.2	0.0047	<0.01
	11/28/18	200.7/200.8	0.0066	0.46	<0.002	<0.006	<0.006	**2**	0.00042	**2.2**	<0.001	0.0032	NA	NA	0.0036
	08/24/18	200.7/200.8	0.007	0.42	<0.002	<0.006	0.0049	**1.7**	0.00036	**2.4**	<0.001	0.0029	0.064	0.0061	0.0042
	05/04/18	200.7/200.8	0.0071	0.45	<0.002	<0.006	<0.006	**1.8**	0.00026	**2.8**	<0.001	0.0015	<0.2	0.005	0.004
	02/16/18	200.7/200.8	0.0021	0.44	<0.002	<0.006	<0.006	**1.7**	<0.0005	**2.6**	0.0085	0.0014	<0.2	0.0055	<0.01
	12/01/17	200.7/200.8	0.0041	0.62	<0.002	<0.006	<0.006	**1.9**	0.00065	**2.3**	<0.01	0.0013	<0.2	0.0046	<0.01
	09/26/17	200.7/200.8	0.008	0.77	<0.002	<0.006	<0.006	**4.2**	0.0014	**2.9**	0.0056	<0.005	<0.2	NA	0.0044
	06/14/17	200.7/200.8	0.008	0.56	<0.002	0.0022	<0.006	**3.8**	0.0032	**2.5**	0.0029	<0.005	<0.2	NA	0.03
	03/15/17	200.7/200.8	0.0078	0.76	<0.002	<0.006	0.0052	**6.5**	0.0026	**2.8**	0.0035	<0.005	<0.2	0.0057	0.0059
	11/08/16	200.7/200.8	0.0064	0.6	<0.002	<0.006	<0.006	**1.9**	0.0013	**2.8**	0.0034	<0.005	<0.2	0.0077	0.0068
	09/13/16	200.7/200.8	0.007	0.58	<0.002	<0.006	<0.006	**3.3**	0.0031	**2.8**	0.0035	<0.005	0.071	0.011	0.0061
	02/26/16	200.7/200.8	0.0046	0.12	<0.002	<0.006	<0.006	0.98	0.00095	**2.6**	0.0012	<0.005	<0.2	0.018	0.0056
	11/03/15	200.7/200.8	**0.02**	**12**	*<0.01**	<0.006	<0.006	0.65	**0.35**	**3.5**	<0.02	<0.005	<0.2	**0.048**	0.33
	08/18/15	200.7/200.8	0.0052	0.2	<0.002	<0.006	0.0097	**1.7**	0.0037	**2.9**	<0.005	<0.005	<0.2	0.018	0.011
	06/08/15	200.7/200.8	<0.005	0.24	<0.002	<0.006	<0.006	**2.6**	0.0032	**3.3**	<0.005	<0.005	<0.2	0.02	0.015
	03/12/15	200.7/200.8	0.0057	0.17	<0.002	<0.006	<0.006	**1.8**	0.0017	**3.1**	0.0023	<0.005	<0.2	0.022	<0.01
	11/18/14	200.7/200.8	0.0051	0.21	<0.002	<0.006	<0.006	**2**	0.0031	**3**	<0.01	<0.005	<0.2	0.025	0.019
	09/18/14	200.7/200.8	0.0055	0.21	<0.002	<0.006	<0.006	**1.8**	0.0016	**3.3**	0.0019	<0.005	<0.2	0.022	0.013
	06/16/14	200.7/200.8	0.0063	0.61	<0.002	0.013	0.012	**10**	**0.022**	**4.1**	0.0045	<0.005	<0.2	0.027	0.036

8.17.2 MKTF WELLS

Total Metals Analytical Result Summary

STANDARDS			PARAMETERS												
			Arsenic (mg/L)	Barium (mg/L)	Cadmium (mg/L)	Chromium (mg/L)	Copper (mg/L)	Iron (mg/L)	Lead (mg/L)	Manganese (mg/L)	Selenium (mg/L)	Silver (mg/L)	Mercury (ug/L)	Uranium (mg/L)	Zinc (mg/L)
WQCC 20 NMAC 6.2.3103 (DEC 2018)			**0.01**	**2**	**0.005**	**0.05**	**1**	**1**	**0.015**	**0.2**	**0.05**	**0.05**	**2**	**0.03**	**10**
40 CFR 141.62 MCL			0.01	2	0.005	0.1	1.3	NE	0.015	NE	0.05	NE	2	0.03	NE
NMED Tap Water (JUNE 2019)			0.000855	3.28	0.00624	0.0057	0.7898	13.8	NE	2.02	0.0987	0.0812	0.626	0.0592	5.96
EPA RSL for Tap Water (NOVEMBER 2019)			0.000052	3.8	0.0092	NE	0.8	14	0.015	0.43	0.1	0.094	0.63	0.004	6
WELL ID	**DATE SAMPLED**	**METHOD**													
MKTF-18	10/29/19	200.7/200.8	0.0018	**2.1**	<0.002	<0.006	<0.006	**3.4**	0.00045	**2**	<0.0010	<0.005	<0.2	NA	<0.01
	08/19/19	200.7/200.8	SPH Detected - No samples were collected.												
	05/16/19	200.7/200.8	0.0019	**2.2**	<0.002	<0.006	<0.006	**3.8**	0.0032	**2.2**	0.00056	<0.005	<0.2	0.00096	<0.01
	03/26/19	200.7/200.8	0.0028	**2.5**	<0.002	0.0048	0.0032	**12**	0.00026	**1.9**	<0.001	<0.005	0.083	0.00051	<0.01
	11/28/18	200.7/200.8	0.0018	1.4	<0.002	0.0048	0.0032	**2.5**	0.00042	**1.9**	<0.0005	0.0028	NA	NA	0.004
	08/24/18	200.7/200.8	0.0024	2	<0.002	<0.006	0.0044	**2.9**	0.00042	**2.2**	<0.001	0.0028	0.082	0.00064	0.0034
	05/04/18	200.7/200.8	0.0021	**2.1**	<0.002	<0.006	<0.006	**1.9**	0.00051	**2.2**	<0.003	0.0014	<0.2	0.00074	0.0051
	02/16/18	200.7/200.8	0.0023	**2.2**	<0.002	<0.006	<0.006	**3.3**	0.0028	**2.1**	0.003	0.0013	<0.2	0.001	0.015
	06/14/17	200.7/200.8	<0.005	**2.4**	<0.002	0.0048	0.0032	**7**	0.0088	**2.3**	0.0041	<0.005	<0.2	NA	0.02
	03/01/17	200.7/200.8	0.003	**2.2**	<0.002	<0.006	<0.006	**4.9**	0.0047	**2.1**	0.0039	<0.005	0.15	NA	0.012
	11/08/16	200.7/200.8	0.0033	1.7	<0.002	<0.006	<0.006	**2.2**	0.00041	**1.8**	0.0059	<0.005	<0.2	0.0011	<0.01
	09/13/16	200.7/200.8	0.0033	1.8	<0.002	<0.006	<0.006	**3.3**	0.0013	**2**	0.0049	<0.005	0.064	0.0013	0.0037
	06/10/16	200.7/200.8	0.0027	1.9	<0.002	<0.006	<0.006	**2.5**	0.0013	**1.9**	0.0057	<0.005	<0.2	0.0012	<0.01
	02/26/16	200.7/200.8	0.0022	**2.3**	<0.002	0.0043	0.0057	**6.4**	0.0064	**2.1**	0.0019	<0.005	<0.2	0.0016	0.02
	11/03/15	200.7/200.8	0.0088	**12**	<0.002	0.046	0.064	**58**	**0.14**	**11**	<0.01	<0.005	<1	0.015	0.19
	08/18/15	200.7/200.8	**0.018**	**24**	*<0.01**	**0.26**	0.21	**110**	**0.37**	**22**	<0.01	<0.005	0.25	**0.037**	0.54
	06/08/15	200.7/200.8	<0.005	**2.5**	<0.002	<0.006	<0.006	**5**	<0.0025	**1.8**	<0.005	<0.005	<0.2	<0.0025	<0.01
	03/17/15	200.7/200.8	0.0031	**3.5**	<0.002	0.012	0.011	**14**	**0.021**	**2.7**	<0.01	<0.005	<0.2	0.0026	0.051
	11/18/14	200.7/200.8	0.0019	**2.5**	<0.002	<0.006	<0.006	**4**	0.0016	**1.8**	<0.01	<0.005	<0.2	<0.001	0.02
	09/18/14	200.7/200.8	0.0015	**2.6**	<0.002	<0.006	<0.006	**3.2**	0.0028	**2**	0.0025	<0.005	<0.2	0.0015	0.018
	06/06/14	200.7/200.8	**0.013**	**19**	*<0.01**	**0.11**	0.12	**81**	**0.29**	**17**	0.013	<0.025	<0.2	0.022	0.31

8.17.2 MKTF WELLS

Total Metals Analytical Result Summary

STANDARDS			PARAMETERS												
			Arsenic (mg/L)	Barium (mg/L)	Cadmium (mg/L)	Chromium (mg/L)	Copper (mg/L)	Iron (mg/L)	Lead (mg/L)	Manganese (mg/L)	Selenium (mg/L)	Silver (mg/L)	Mercury (ug/L)	Uranium (mg/L)	Zinc (mg/L)
WQCC 20 NMAC 6.2.3103 (DEC 2018)			0.01	2	0.005	0.05	1	1	0.015	0.2	0.05	0.05	2	0.03	10
40 CFR 141.62 MCL			0.01	2	0.005	0.1	1.3	NE	0.015	NE	0.05	NE	2	0.03	NE
NMED Tap Water (JUNE 2019)			0.000855	3.28	0.00624	0.0057	0.7898	13.8	NE	2.02	0.0987	0.0812	0.626	0.0592	5.96
EPA RSL for Tap Water (NOVEMBER 2019)			0.000052	3.8	0.0092	NE	0.8	14	0.015	0.43	0.1	0.094	0.63	0.004	6
WELL ID	DATE SAMPLED	METHOD													
MKTF-19	10/28/19	200.7/200.8	0.013	2.1	<0.002	<0.006	<0.006	15	0.009	2.4	<0.005	0.0015	<0.2	NA	0.03
	08/19/19	200.7/200.8	0.014	2.3	<0.002	0.007	0.007	19	0.022	2.7	0.0014	0.0017	<0.2	0.0028	0.035
	05/09/19	200.7/200.8	0.012	2.1	<0.002	0.0019	0.0054	15	0.013	2.7	0.00091	0.0018	0.051	0.001	0.017
	03/26/19	200.7/200.8	0.01	2	<0.002	0.0034	0.0073	11	0.01	2.6	0.002	0.0016	0.09	0.0022	0.042
	11/28/18	200.7/200.8	0.012	1.9	<0.002	0.0043	<0.006	7.5	0.0051	2.4	<0.001	0.002	NA	NA	0.02
	08/24/18	200.7/200.8	0.014	2.1	<0.002	0.0019	0.0055	15	0.016	2.4	<0.001	0.0029	<0.2	0.0034	0.033
	05/04/18	200.7/200.8	0.014	1.8	<0.002	<0.006	<0.006	11	0.0047	2.4	<0.001	0.0015	<0.2	0.00073	0.0063
	02/16/18	200.7/200.8	0.01	1.7	<0.002	<0.006	<0.006	10	0.0058	2.3	0.0029	0.0018	<0.2	0.0012	0.012
	12/01/17	200.7/200.8	0.0077	2	<0.002	<0.006	0.0056	14	0.01	2.3	<0.01	<0.005	<0.2	0.0016	0.011
	09/26/17	200.7/200.8	0.015	2.4	<0.002	0.012	0.015	20	0.026	3.4	0.0077	<0.005	0.042	NA	0.062
	06/14/17	200.7/200.8	0.014	2.2	<0.002	0.0059	0.01	17	0.022	3.3	<0.01	<0.005	0.045	NA	0.1
	03/15/17	200.7/200.8	0.018	2.3	<0.002	0.0075	0.018	20	0.033	3.3	0.012	<0.005	<0.2	0.0071	0.1
	11/08/16	200.7/200.8	0.013	2.2	<0.002	0.0088	0.015	33	0.033	2.6	0.0087	<0.005	<0.2	0.0059	0.07
	09/13/16	200.7/200.8	0.015	2.1	<0.002	0.0057	0.0083	17	0.023	2.6	0.0079	<0.005	0.073	0.0043	0.065
	06/10/16	200.7/200.8	0.016	2.6	<0.002	0.0082	0.012	19	0.038	3.3	0.011	<0.005	<0.2	0.0079	0.077
	02/25/16	200.7/200.8	0.022	2.8	<0.002	0.012	0.018	23	0.069	3.9	0.019	<0.005	<1	0.025	0.01
	11/03/15	200.7/200.8	0.018	2.7	<0.002	<0.006	<0.006	13	0.046	3.4	0.01	<0.005	<0.2	0.0077	0.096
	08/18/15	200.7/200.8	0.018	4.4	<0.002	0.044	0.06	64	0.14	6.3	0.0062	<0.005	<0.2	0.024	0.22
	06/08/15	200.7/200.8	0.019	2.5	<0.002	0.024	0.017	28	0.035	4.2	<0.005	<0.005	<0.2	0.0048	0.082
	03/12/15	200.7/200.8	0.017	2.7	<0.002	0.022	0.026	33	0.052	4.2	<0.01	<0.005	<0.2	0.0065	0.078
	11/18/14	200.7/200.8	0.022	3.6	<0.002	0.035	0.043	47	0.079	5.6	<0.01	<0.005	<0.2	0.014	0.11
MKTF-20	11/05/19	200.7/200.8	0.016	2	<0.002	<0.006	0.075	4.3	0.0016	2	<0.005	<0.005	0.042	0.00052	0.44
	08/21/19	200.7/200.8	0.02	21	<0.002	<0.006	0.016	19	0.0037	7.5	0.0012	0.007	<0.2	0.0023	0.02
	05/14/19	200.7/200.8	0.034	4.4	<0.002	<0.006	0.014	25	0.005	8.5	0.00079	0.0044	<0.2	0.0037	0.018
	02/20/19	200.7/200.8	0.045	3.9	<0.002	<0.006	0.045	58	0.01	5.5	0.00065	<0.005	0.073	0.0018	0.52
	11/29/18	200.7/200.8	0.025	5.5	<0.002	<0.006	0.095	8	0.0047	2.6	<0.001	0.0045	0.049	NA	0.26
	08/31/18	200.7/200.8	0.028	4	<0.002	<0.006	0.021	5.8	0.0054	3	<0.001	0.0041	<0.2	0.0017	0.019
	05/11/18	200.7/200.8	0.028	9	<0.002	<0.006	0.027	16	0.0088	5.5	0.012	0.0057	<0.2	0.0052	0.023
	02/15/18	200.7/200.8	0.016	32	<0.002	<0.006	0.029	52	0.0073	16	0.01	0.011	<0.2	0.0031	0.029
	11/29/17	200.7/200.8	0.025	9.3	<0.002	<0.006	0.045	15	0.0086	2.9	0.0096	0.0018	NA	0.0025	0.06
	09/26/17	200.7/200.8	0.026	7.6	<0.002	0.0022	0.11	19	0.0083	3.9	0.033	<0.005	<0.2	NA	0.35
	06/12/17	200.7/200.8	0.022	7.5	<0.002	<0.006	0.02	17	0.012	4.1	0.035	<0.005	<0.2	NA	0.02
	03/14/17	200.7/200.8	0.025	11	<0.002	<0.006	0.036	22	0.013	6.3	0.018	NA	<0.2	0.00085	0.097
	11/03/16	200.7/200.8	0.029	9.3	<0.002	<0.006	0.019	22	0.009	8.9	0.013	<0.005	<0.2	0.0052	0.024
	09/12/16	200.7/200.8	0.025	5.2	<0.002	<0.006	0.022	17	0.0072	4.4	0.0092	<0.005	<0.2	0.0044	0.033
	06/09/16	200.7/200.8	0.038	4.6	<0.002	<0.006	0.09	17	0.019	5	0.0093	<0.005	0.077	0.02	0.085
	03/16/15	200.7/200.8	0.025	2	<0.002	<0.006	0.016	11	0.0066	3.2	0.0046	<0.005	<0.2	0.011	0.03
	11/18/14	200.7/200.8	0.017	4.5	<0.002	0.022	0.12	45	0.048	4.9	<0.005	<0.005	<0.2	0.0066	0.19

8.17.2 MKTF WELLS

Total Metals Analytical Result Summary

STANDARDS			PARAMETERS												
			Arsenic (mg/L)	Barium (mg/L)	Cadmium (mg/L)	Chromium (mg/L)	Copper (mg/L)	Iron (mg/L)	Lead (mg/L)	Manganese (mg/L)	Selenium (mg/L)	Silver (mg/L)	Mercury (ug/L)	Uranium (mg/L)	Zinc (mg/L)
WQCC 20 NMAC 6.2.3103 (DEC 2018)			**0.01**	**2**	**0.005**	**0.05**	**1**	**1**	**0.015**	**0.2**	**0.05**	**0.05**	**2**	**0.03**	**10**
40 CFR 141.62 MCL			0.01	2	0.005	0.1	1.3	NE	0.015	NE	0.05	NE	2	0.03	NE
NMED Tap Water (JUNE 2019)			0.000855	3.28	0.00624	0.0057	0.7898	13.8	NE	2.02	0.0987	0.0812	0.626	0.0592	5.96
EPA RSL for Tap Water (NOVEMBER 2019)			0.000052	3.8	0.0092	NE	0.8	14	0.015	0.43	0.1	0.094	0.63	0.004	6
WELL ID	**DATE SAMPLED**	**METHOD**													
MKTF-21	11/05/19	200.7/200.8	**0.022**	**14**	<0.002	<0.006	0.014	**9**	0.0022	**5.8**	<0.001	0.0069	<0.2	0.0027	0.096
	08/22/19	200.7/200.8	**0.017**	**3.4**	<0.002	<0.006	0.0098	**21**	0.0017	**3.3**	0.00073	<0.005	0.13	0.00074	0.068
	05/14/19	200.7/200.8	**0.022**	**5.2**	<0.002	<0.006	0.02	**42**	0.0032	**5.7**	0.00084	<0.005	0.043	0.0027	0.14
	02/20/19	200.7/200.8	**0.017**	0.67	<0.002	<0.006	0.0054	**63**	0.0029	**15**	<0.005	0.011	<0.2	0.0028	0.041
	11/29/18	200.7/200.8	**0.02**	**4.3**	<0.002	<0.006	0.022	**29**	0.003	**4.1**	<0.001	0.0037	<0.2	NA	0.27
	08/31/18	200.7/200.8	**0.023**	**4.1**	<0.002	<0.006	<0.006	**18**	0.0014	**3.7**	<0.001	0.0024	0.042	0.002	0.015
	05/11/18	200.7/200.8	**0.022**	**4**	*<0.005**	<0.006	0.013	**43**	0.0023	**5.9**	0.0057	<0.005	0.041	0.0038	0.11
	02/15/18	200.7/200.8	**0.016**	**2.9**	<0.002	<0.006	0.013	**20**	0.0018	**5**	0.0087	<0.005	<0.2	0.0055	0.12
	11/28/17	200.7/200.8	**0.023**	**4.4**	<0.002	<0.006	0.0061	**21**	0.0013	**4.9**	0.0056	<0.005	NA	0.0047	0.07
	09/26/17	200.7/200.8	0.01	**2.8**	<0.002	<0.006	0.0032	**7.9**	0.001	**4**	0.0098	<0.005	<0.2	NA	0.091
	06/21/17	200.7/200.8	**0.018**	**4.1**	<0.002	<0.006	0.01	**43**	0.0065	**6.9**	0.023	<0.005	<0.2	0.0011	0.069
	03/14/17	200.7/200.8	**0.016**	**3.6**	<0.002	<0.006	0.0052	**29**	0.0035	**5.6**	0.0064	<0.005	<0.2	0.0013	0.045
	11/03/16	200.7/200.8	**0.021**	**4.3**	<0.002	<0.006	<0.006	**33**	0.0033	**5.1**	0.0086	<0.005	<0.2	0.0022	0.057
	09/12/16	200.7/200.8	**0.019**	**2.7**	<0.002	<0.006	0.0064	**24**	0.0031	**4.1**	0.0085	<0.005	0.053	0.001	0.048
	06/10/15	--	Not enough water to collect for this set.												
	03/16/15	200.7/200.8	**0.02**	**4.9**	<0.002	0.029	0.1	**55**	**0.079**	**6.4**	<0.01	<0.005	<0.2	0.0066	0.44
MKTF-22	10/24/19	200.7/200.8	0.0020	1.7	<0.002	0.0016	<0.006	**12**	<0.005	**2.9**	<0.005	0.0015	0.097	NA	0.014
	08/20/19	200.7/200.8	0.0016	1.4	<0.002	<0.006	<0.006	**8.5**	0.001	**2.9**	<0.001	0.002	<0.2	0.0023	<0.01
	05/09/19	200.7/200.8	0.0018	1.9	<0.002	0.0026	<0.006	**11**	0.0066	**3.1**	0.00099	0.0022	<0.2	0.0022	0.024
	03/26/19	200.7/200.8	0.002	1.5	<0.002	0.0023	0.0085	**8.7**	0.0052	**2.6**	0.0015	0.0014	0.076	0.0024	0.018
	11/28/18	200.7/200.8	0.0019	1.4	<0.002	0.0023	<0.006	**12**	0.0037	**2.5**	<0.001	0.003	NA	NA	0.0077
	08/30/18	200.7/200.8	0.002	1.3	<0.002	<0.006	<0.006	**7.4**	0.002	**2.5**	<0.001	0.0024	0.049	0.0024	0.0059
	05/10/18	200.7/200.8	0.00091	1.3	<0.002	<0.006	<0.006	**4.4**	0.00043	**2.5**	0.0013	0.0028	0.047	0.0023	<0.01
	02/08/18	200.7/200.8	0.0025	1.4	<0.002	<0.006	<0.006	**8.3**	0.0039	**2.5**	0.0021	0.0026	0.093	0.0026	0.0078
	11/28/17	200.7/200.8	*<0.02**	1.5	<0.002	<0.006	0.0043	**7.9**	0.0048	**2.6**	<0.005	0.0017	NA	0.0026	0.008
	10/03/17	200.7/200.8	0.0024	1.8	<0.002	0.017	0.017	**25**	**0.027**	**3**	0.0022	<0.005	<0.2	NA	0.034
	06/08/17	200.7/200.8	0.0016	1.3	<0.002	0.0075	0.0061	**10**	0.01	**2.4**	0.0019	<0.005	0.066	0.0033	0.015
	03/08/17	200.7/200.8	0.0041	2	<0.002	0.01	0.015	**17**	**0.029**	**3.3**	0.0067	<0.005	<0.2	NA	0.032
	11/01/16	200.7/200.8	0.0044	1.7	<0.002	0.0062	0.0096	**12**	**0.033**	**3.1**	0.0047	<0.005	<0.2	0.0041	0.02
	09/10/16	200.7/200.8	0.0032	1.3	<0.002	0.0051	<0.006	**8.8**	0.0072	**2.6**	0.0045	<0.005	<0.2	0.004	0.011
	06/10/16	200.7/200.8	0.0025	**2.2**	<0.002	0.0062	<0.006	**17**	**0.022**	**3.7**	0.0039	<0.005	<0.2	0.0047	0.033
	02/25/16	200.7/200.8	0.0023	2	<0.002	0.012	0.013	**20**	**0.035**	**3.4**	0.0025	<0.005	<0.2	0.0039	0.039
	11/09/15	200.7/200.8	0.0036	1.4	<0.002	0.0099	0.019	**18**	**0.029**	**3.1**	<0.01	<0.005	<0.2	0.0078	0.032
	08/20/15	200.7/200.8	0.0076	**5.6**	<0.002	**0.1**	0.15	**87**	**0.24**	**9.1**	0.0074	<0.005	<0.2	**0.031**	0.21
	06/09/15	200.7/200.8	<0.005	**2.2**	<0.002	0.018	0.026	**27**	**0.048**	**3.6**	<0.005	<0.005	<0.2	0.0053	0.057
	03/12/15	200.7/200.8	*<0.01**	**2.1**	<0.002	0.018	0.015	**21**	**0.035**	**3.5**	<0.01	<0.005	<0.2	0.0047	0.038
	11/17/14	200.7/200.8	0.0028	1.1	<0.002	<0.006	<0.006	**15**	0.014	**3**	0.004	<0.005	<0.2	0.0041	0.025
	09/23/14	--	Dry - No samples were collected.												

8.17.2 MKTF WELLS

Total Metals Analytical Result Summary

STANDARDS			PARAMETERS												
			Arsenic (mg/L)	Barium (mg/L)	Cadmium (mg/L)	Chromium (mg/L)	Copper (mg/L)	Iron (mg/L)	Lead (mg/L)	Manganese (mg/L)	Selenium (mg/L)	Silver (mg/L)	Mercury (ug/L)	Uranium (mg/L)	Zinc (mg/L)
WQCC 20 NMAC 6.2.3103 (DEC 2018)			**0.01**	**2**	**0.005**	**0.05**	**1**	**1**	**0.015**	**0.2**	**0.05**	**0.05**	**2**	**0.03**	**10**
40 CFR 141.62 MCL			0.01	2	0.005	0.1	1.3	NE	0.015	NE	0.05	NE	2	0.03	NE
NMED Tap Water (JUNE 2019)			0.000855	3.28	0.00624	0.0057	0.7898	13.8	NE	2.02	0.0987	0.0812	0.626	0.0592	5.96
EPA RSL for Tap Water (NOVEMBER 2019)			0.000052	3.8	0.0092	NE	0.8	14	0.015	0.43	0.1	0.094	0.63	0.004	6
WELL ID	**DATE SAMPLED**	**METHOD**													
MKTF-23	10/29/19	200.7/200.8	0.009	1.9	<0.002	<0.006	<0.006	0.51	0.0019	**1.9**	<0.005	0.0015	<0.2	NA	<0.01
	08/20/19	--	SPH Detected - No samples were collected.												
	05/09/19	--	SPH Detected - No samples were collected.												
	03/26/19	200.7/200.8	0.0063	1.5	<0.002	0.0029	<0.006	0.64	0.0017	**2**	0.00055	<0.005	0.08	0.01	<0.01
	06/10/16	200.7/200.8	**0.013**	0.8	<0.002	0.0029	<0.006	**4.1**	0.0094	**1.7**	0.0094	<0.005	<0.2	0.0056	0.016
	02/25/16	200.7/200.8	0.0094	0.67	<0.002	<0.006	<0.006	**3.8**	0.0025	**1.6**	0.0035	<0.005	<0.2	0.0027	0.0054
	11/10/15	200.7/200.8	**0.013**	0.66	<0.002	<0.006	<0.006	0.29	0.0009	**1.4**	<0.02	<0.005	<0.2	**0.037**	<0.01
	08/21/15	200.7/200.8	**0.014**	0.9	<0.002	0.0062	0.008	**5.4**	0.0088	**1.7**	<0.005	<0.005	<0.2	**0.032**	0.022
	06/09/15	200.7/200.8	**0.011**	0.83	<0.002	<0.006	0.012	**5.4**	0.0093	**1.6**	<0.005	<0.005	<0.2	0.011	0.027
	03/12/15	200.7/200.8	**0.013**	0.64	<0.002	<0.006	<0.006	**5.2**	0.0035	**1.8**	0.01	<0.005	<0.2	0.0062	0.011
	11/17/14	200.7/200.8	**0.011**	0.49	<0.002	<0.006	<0.006	**6.2**	0.005	**1.6**	0.0067	<0.005	<0.2	0.016	0.035
	04/10/14	--	SPH Detected - No samples were collected.												
MKTF-24	10/23/19	200.7/200.8	0.0024	0.37	<0.002	<0.006	<0.006	0.9	0.0021	**2.3**	<0.001	0.0028	0.12	NA	<0.010
	08/23/19	200.7/200.8	0.0033	0.37	<0.002	0.0021	0.0042	**5.3**	0.0058	**2.1**	0.0006	0.0022	0.12	0.018	0.011
	05/06/19	200.7/200.8	0.0038	0.46	<0.002	0.0019	0.0051	**8.3**	0.011	**2.6**	<0.005	0.004	0.042	0.012	0.0092
	02/25/19	--	Well not sampled.												
	11/15/18	200.7/200.8	0.0026	0.28	<0.002	<0.006	0.0048	0.7	0.0018	**2**	<0.001	0.0038	0.042	0.012	0.0037
	08/20/18	200.7/200.8	0.0029	0.27	<0.002	0.002	<0.006	**1.2**	0.0032	**1.8**	<0.001	0.0029	<0.2	0.016	0.013
	05/01/18	200.7/200.8	0.003	0.27	<0.002	<0.006	<0.006	**1.3**	0.0026	**2.1**	<0.005	<0.005	0.061	0.015	0.006
	02/06/18	200.7/200.8	<0.005	0.26	<0.002	<0.006	<0.006	0.78	0.0027	**2.2**	<0.01	0.0023	0.087	0.016	0.011
	11/20/17	200.7/200.8	0.0028	0.26	<0.002	<0.006	0.0048	**1.4**	0.0031	**2.1**	<0.005	0.0017	<0.2	0.014	<0.01
	10/03/17	200.7/200.8	0.0039	0.42	<0.002	0.009	0.0084	**8.3**	0.011	**1.8**	0.0052	<0.005	<0.2	NA	0.019
	06/05/17	200.7/200.8	0.0029	0.27	<0.002	0.0021	0.0035	**1.9**	0.0037	**2.1**	0.0053	<0.005	0.045	0.017	0.0055
	03/29/17	200.7/200.8	0.006	1.4	<0.002	0.0028	0.037	**24**	**0.043**	**3.9**	0.01	<0.005	0.13	0.03	0.061
	10/28/16	200.7/200.8	0.0025	0.28	<0.002	<0.006	<0.006	**1.3**	0.0043	**1.8**	0.0055	<0.005	<0.2	0.02	0.0065
	09/07/16	200.7/200.8	0.0048	0.34	<0.002	<0.006	<0.006	**3.9**	0.0089	**2**	0.0075	<0.005	<0.2	0.023	0.0085
	06/08/16	200.7/200.8	**0.026**	**15**	*<0.01**	**0.19**	0.23	**120**	**0.49**	**35**	0.029	<0.025	0.6	**0.077**	0.38
	02/22/16	200.7/200.8	0.0028	0.51	<0.002	0.0059	0.0086	**5.2**	0.013	**2.3**	0.0028	<0.005	0.13	0.024	0.018
	11/04/15	200.7/200.8	0.0059	0.87	<0.002	0.017	0.023	**16**	**0.025**	**2.7**	*<0.05**	<0.005	<0.2	**0.034**	0.04
	08/20/15	200.7/200.8	0.0057	1.3	<0.002	0.025	0.037	**22**	**0.04**	**3.3**	0.0067	<0.005	<0.2	**0.042**	0.06
	06/10/15	200.7/200.8	<0.005	0.58	<0.002	0.01	0.01	**8.8**	0.013	**2.1**	<0.005	<0.005	<0.2	**0.038**	0.03
	03/11/15	200.7/200.8	*<0.01**	0.71	<0.002	0.014	0.019	**12**	**0.02**	**2.2**	<0.01	<0.005	<0.2	**0.046**	0.031
	11/14/14	200.7/200.8	<0.005	0.48	<0.002	0.0098	0.015	**6.9**	0.012	**1.9**	<0.01	<0.005	<0.2	**0.038**	0.026

8.17.2 MKTF WELLS

Total Metals Analytical Result Summary

STANDARDS			PARAMETERS												
			Arsenic (mg/L)	Barium (mg/L)	Cadmium (mg/L)	Chromium (mg/L)	Copper (mg/L)	Iron (mg/L)	Lead (mg/L)	Manganese (mg/L)	Selenium (mg/L)	Silver (mg/L)	Mercury (ug/L)	Uranium (mg/L)	Zinc (mg/L)
WQCC 20 NMAC 6.2.3103 (DEC 2018)			**0.01**	**2**	**0.005**	**0.05**	**1**	**1**	**0.015**	**0.2**	**0.05**	**0.05**	**2**	**0.03**	**10**
40 CFR 141.62 MCL			0.01	2	0.005	0.1	1.3	NE	0.015	NE	0.05	NE	2	0.03	NE
NMED Tap Water (JUNE 2019)			0.000855	3.28	0.00624	0.0057	0.7898	13.8	NE	2.02	0.0987	0.0812	0.626	0.0592	5.96
EPA RSL for Tap Water (NOVEMBER 2019)			0.000052	3.8	0.0092	NE	0.8	14	0.015	0.43	0.1	0.094	0.63	0.004	6
WELL ID	**DATE SAMPLED**	**METHOD**													
MKTF-25	10/23/19	200.7/200.8	0.0064	0.94	<0.002	0.0086	0.011	**10**	0.012	**5.8**	<0.005	0.0044	0.16	NA	0.021
	08/27/19	200.7/200.8	0.0027	0.39	<0.002	<0.006	0.017	**1.8**	0.0077	**3.9**	0.0014	0.0031	0.054	**0.036**	0.012
	05/06/19	200.7/200.8	0.0019	0.61	<0.002	0.0035	0.021	**4.7**	0.007	**2.2**	<0.005	0.0041	0.048	**0.031**	0.013
	02/14/19	--	Well not sampled.												
	11/15/18	200.7/200.8	0.0058	0.46	<0.002	**0.1**	0.017	**2.9**	0.0037	**3.1**	<0.001	0.0035	0.1	**0.055**	0.01
	08/17/18	200.7/200.8	0.0055	0.48	<0.002	0.0033	0.011	**12**	0.0063	**3**	<0.005	0.0023	0.049	0.029	0.013
	05/06/18	200.7/200.8	0.0053	0.33	<0.002	*<0.06**	0.0056	**2.6**	0.0021	**2.7**	<0.001	0.0015	0.062	0.028	0.0039
	02/05/18	200.7/200.8	0.0035	0.42	<0.002	<0.006	0.012	**4.3**	0.0062	**3.2**	<0.01	0.0036	0.067	0.028	0.011
	11/21/17	200.7/200.8	0.004	0.34	<0.002	0.0032	0.016	**4.5**	0.0053	**2.7**	<0.005	<0.005	<0.2	0.026	0.0086
	09/25/17	200.7/200.8	0.0052	0.38	<0.002	0.0048	0.0098	**4.1**	0.0057	**2.8**	0.0061	<0.005	0.04	NA	0.0086
	06/05/17	200.7/200.8	0.0047	0.28	<0.002	0.0052	0.008	**4.8**	0.007	**2.9**	0.0034	<0.005	0.056	**0.032**	0.0084
	03/29/17	200.7/200.8	0.0059	0.58	<0.002	0.0091	0.019	**8.7**	**0.02**	**3.7**	0.005	<0.005	0.07	0.028	0.021
	11/01/16	200.7/200.8	0.0047	0.39	<0.002	0.0075	0.021	**3.2**	0.005	**2.8**	0.0062	<0.005	<0.2	**0.032**	0.0072
	09/09/16	200.7/200.8	0.0044	0.45	<0.002	<0.006	0.006	**4.3**	0.0063	**3.4**	0.0059	<0.005	0.054	0.027	0.012
	06/09/16	200.7/200.8	0.0041	1.6	<0.002	0.013	0.034	**15**	**0.043**	**5.6**	0.007	<0.005	0.13	**0.034**	0.038
	02/23/16	200.7/200.8	0.0028	0.31	<0.002	<0.006	<0.006	**1.4**	0.0028	**3.1**	0.0024	<0.005	0.071	0.029	0.0048
	11/05/15	200.7/200.8	0.0049	0.81	<0.002	0.0075	0.019	**7.9**	**0.019**	**3.9**	0.0076	<0.005	<0.2	**0.033**	0.021
	08/21/15	200.7/200.8	0.0039	0.49	<0.002	0.0065	0.016	**5.2**	0.0084	**3.7**	0.0038	<0.005	<0.2	**0.033**	0.015
	06/10/15	200.7/200.8	<0.005	0.48	<0.002	<0.006	0.0083	**5.7**	0.0089	**3.7**	<0.005	<0.005	<0.2	**0.033**	0.018
	03/11/15	200.7/200.8	0.0041	0.58	<0.002	0.0064	0.014	**7.5**	0.013	**3.9**	0.0058	<0.005	<0.2	**0.038**	0.017
	11/14/14	200.7/200.8	<0.005	0.37	<0.002	<0.006	0.011	**2.7**	0.0074	**3.6**	<0.01	<0.005	<0.2	0.03	0.013
MKTF-26			SPH Detected - No samples were collected.												
	06/09/16	200.7/200.8	0.005	0.75	<0.002	0.011	0.028	**20**	**0.03**	**1.6**	0.0061	<0.005	0.21	**0.099**	0.073
	02/22/16	200.7/200.8	0.0025	0.23	<0.002	0.0034	0.011	**64**	0.009	**1.1**	0.0029	<0.005	0.14	**0.089**	0.029
	11/04/15	200.7/200.8	0.005	0.26	<0.002	<0.006	0.016	**9.8**	0.013	**1.3**	*<0.05**	<0.005	<0.2	**0.059**	0.04
	08/20/15	200.7/200.8	0.0053	0.23	<0.002	<0.006	0.01	**5.4**	0.0067	**1.4**	0.0062	<0.005	<0.2	**0.092**	0.022
	06/10/15	200.7/200.8	<0.005	0.18	<0.002	<0.006	<0.006	**2.7**	0.003	**1.3**	<0.005	<0.005	<0.2	**0.054**	0.015
	03/11/15	200.7/200.8	0.004	0.2	<0.002	<0.006	<0.006	**3.1**	0.0029	**1.3**	0.0047	<0.005	<0.2	**0.045**	0.012
	11/14/14	200.7/200.8	<0.005	0.15	<0.002	<0.006	<0.006	**1.3**	<0.005	**1.4**	<0.01	<0.005	<0.2	**0.077**	0.014

8.17.2 MKTF WELLS

Total Metals Analytical Result Summary

STANDARDS			PARAMETERS												
			Arsenic (mg/L)	Barium (mg/L)	Cadmium (mg/L)	Chromium (mg/L)	Copper (mg/L)	Iron (mg/L)	Lead (mg/L)	Manganese (mg/L)	Selenium (mg/L)	Silver (mg/L)	Mercury (ug/L)	Uranium (mg/L)	Zinc (mg/L)
WQCC 20 NMAC 6.2.3103 (DEC 2018)			**0.01**	**2**	**0.005**	**0.05**	**1**	**1**	**0.015**	**0.2**	**0.05**	**0.05**	**2**	**0.03**	**10**
40 CFR 141.62 MCL			0.01	2	0.005	0.1	1.3	NE	0.015	NE	0.05	NE	2	0.03	NE
NMED Tap Water (JUNE 2019)			0.000855	3.28	0.00624	0.0057	0.7898	13.8	NE	2.02	0.0987	0.0812	0.626	0.0592	5.96
EPA RSL for Tap Water (NOVEMBER 2019)			0.000052	3.8	0.0092	NE	0.8	14	0.015	0.43	0.1	0.094	0.63	0.004	6
WELL ID	**DATE SAMPLED**	**METHOD**													
MKTF-27	10/23/19	200.7/200.8	<0.005	0.044	<0.002	<0.006	0.0045	0.19	<0.0025	0.13	<0.005	0.0053	0.1	NA	<0.01
	08/21/19	200.7/200.8	0.0015	0.061	<0.002	<0.006	0.015	**1.1**	0.0012	**0.58**	0.0022	0.0044	0.11	0.028	<0.01
	05/06/19	200.7/200.8	<0.005	0.086	<0.002	<0.006	0.013	**2.2**	0.0019	**0.7**	0.0041	0.0092	0.05	**0.03**	0.011
	03/28/19	200.7/200.8	<0.005	0.055	<0.002	<0.006	0.0093	**1.1**	0.00089	**0.077**	0.0055	0.0066	0.046	0.028	<0.01
	11/15/18	200.7/200.8	0.0039	0.076	<0.002	<0.006	<0.006	**1.2**	0.0015	**0.42**	<0.001	0.0067	0.04	**0.036**	0.0072
	08/20/18	200.7/200.8	0.004	0.17	<0.002	0.0042	0.0082	**6.7**	0.0065	**1.2**	<0.005	0.0058	0.074	**0.035**	0.025
	05/01/18	200.7/200.8	0.008	0.14	<0.002	<0.006	0.0092	**3.4**	0.0029	**0.69**	<0.01	0.0074	0.074	**0.037**	0.014
	02/06/18	200.7/200.8	<0.005	0.16	<0.002	0.0026	0.0074	**4.1**	0.0041	**0.52**	<0.01	0.0032	0.094	**0.038**	0.024
	11/20/17	200.7/200.8	0.003	0.19	<0.002	<0.006	0.0084	**6.1**	0.0057	**0.92**	<0.01	0.0021	<0.2	**0.052**	0.017
	10/03/17	200.7/200.8	0.0048	0.1	<0.002	0.0019	0.0038	**2.1**	0.0024	**0.4**	0.013	<0.005	<0.2	NA	0.013
	06/05/17	200.7/200.8	0.0042	0.15	<0.002	0.004	0.0029	**4.8**	0.0053	**0.63**	0.011	<0.005	0.056	**0.07**	0.017
	03/29/17	200.7/200.8	**0.015**	0.26	<0.002	0.0054	<0.006	**9.8**	0.0096	**1.5**	0.022	<0.005	0.071	**0.097**	0.032
	10/28/16	200.7/200.8	0.0028	0.089	<0.002	<0.006	<0.006	**1.5**	0.0022	**0.24**	0.0088	<0.005	<0.2	**0.063**	0.029
	09/07/16	200.7/200.8	0.0035	0.12	<0.002	0.0035	<0.006	**3.7**	0.0051	**0.58**	0.01	<0.005	0.062	**0.06**	0.017
	06/08/16	200.7/200.8	0.0042	0.21	<0.002	0.0053	<0.006	**9.6**	0.011	**0.93**	0.011	<0.005	0.086	**0.059**	0.041
	02/22/16	200.7/200.8	0.0015	0.12	<0.002	0.0025	<0.006	**3.6**	0.0044	**0.43**	0.0034	<0.005	0.095	**0.063**	0.02
	11/04/15	200.7/200.8	<0.005	0.15	<0.002	<0.006	<0.006	**7.4**	0.0073	**0.93**	<0.02	<0.005	<0.2	**0.064**	0.029
	08/20/15	200.7/200.8	<0.005	0.18	<0.002	<0.006	<0.006	**6.2**	0.0064	**0.7**	0.0056	<0.005	<0.2	**0.071**	0.027
	06/09/15	200.7/200.8	*<0.01**	0.13	<0.002	<0.006	<0.006	**4.1**	<0.005	**0.58**	<0.01	<0.005	<0.2	**0.067**	0.023
	03/11/15	200.7/200.8	*<0.01**	0.13	<0.002	<0.006	<0.006	**3.3**	<0.01	**0.27**	<0.01	<0.005	<0.2	**0.071**	0.014
	11/14/14	200.7/200.8	<0.005	0.13	<0.002	<0.006	<0.006	**3.4**	<0.005	**0.5**	<0.01	<0.005	<0.2	**0.087**	0.024

8.17.2 MKTF WELLS

Total Metals Analytical Result Summary

STANDARDS			PARAMETERS												
			Arsenic (mg/L)	Barium (mg/L)	Cadmium (mg/L)	Chromium (mg/L)	Copper (mg/L)	Iron (mg/L)	Lead (mg/L)	Manganese (mg/L)	Selenium (mg/L)	Silver (mg/L)	Mercury (ug/L)	Uranium (mg/L)	Zinc (mg/L)
WQCC 20 NMAC 6.2.3103 (DEC 2018)			**0.01**	**2**	**0.005**	**0.05**	**1**	**1**	**0.015**	**0.2**	**0.05**	**0.05**	**2**	**0.03**	**10**
40 CFR 141.62 MCL			0.01	2	0.005	0.1	1.3	NE	0.015	NE	0.05	NE	2	0.03	NE
NMED Tap Water (JUNE 2019)			0.000855	3.28	0.00624	0.0057	0.7898	13.8	NE	2.02	0.0987	0.0812	0.626	0.0592	5.96
EPA RSL for Tap Water (NOVEMBER 2019)			0.000052	3.8	0.0092	NE	0.8	14	0.015	0.43	0.1	0.094	0.63	0.004	6
WELL ID	**DATE SAMPLED**	**METHOD**													
MKTF-28	10/22/19	200.7/200.8	0.0019	0.081	<0.002	<0.006	0.0041	**1.6**	0.0019	0.12	<0.005	<0.005	0.05	NA	0.013
	08/21/19	200.7/200.8	0.0014	0.065	<0.002	<0.006	<0.006	0.79	0.00099	0.074	0.00059	<0.005	0.11	**0.13**	<0.01
	05/06/19	200.7/200.8	*<0.01**	0.1	<0.002	0.0017	0.006	**3.9**	0.0043	**0.26**	<0.01	<0.005	0.049	**0.14**	0.018
	03/28/19	200.7/200.8	0.0014	0.071	<0.002	<0.006	<0.006	**1.4**	0.0015	0.094	0.00064	<0.005	0.086	**0.14**	0.0059
	11/15/18	200.7/200.8	0.0017	0.071	<0.002	<0.006	<0.006	1	0.00095	0.069	<0.001	<0.005	<0.2	**0.14**	0.0061
	08/20/18	200.7/200.8	0.0024	0.077	<0.002	0.0024	<0.006	**4.4**	0.0029	0.15	<0.001	<0.005	<0.2	**0.14**	0.013
	05/01/18	200.7/200.8	0.0024	0.082	<0.002	<0.006	<0.006	**2.6**	0.0022	0.13	<0.005	<0.005	0.075	**0.15**	0.016
	02/06/18	200.7/200.8	<0.005	0.08	<0.002	<0.006	0.0049	**1.6**	0.00019	0.093	<0.01	<0.005	0.081	**0.15**	0.015
	11/20/17	200.7/200.8	*<0.01**	0.054	<0.002	<0.006	<0.006	0.14	<0.0005	0.091	<0.01	<0.005	NA	**0.13**	0.0045
	10/03/17	200.7/200.8	0.0051	0.07	<0.002	<0.006	0.004	**1.4**	0.0015	0.11	0.011	<0.005	<0.2	NA	0.008
	06/05/17	200.7/200.8	0.0048	0.076	<0.002	<0.006	0.0032	**1.6**	0.0016	0.078	0.012	<0.005	<0.2	**0.16**	0.0057
	03/29/17	200.7/200.8	0.0089	0.36	<0.002	0.0093	0.013	**21**	**0.025**	**0.89**	0.014	<0.005	0.088	**0.16**	0.079
	10/28/16	200.7/200.8	0.0044	0.13	<0.002	<0.006	0.0031	**3.3**	0.0056	0.18	0.013	<0.005	<1	**0.15**	0.015
	09/08/16	200.7/200.8	0.0056	0.26	<0.002	0.0067	0.0094	**11**	0.014	**0.44**	0.013	<0.005	0.11	**0.14**	0.049
	06/08/16	200.7/200.8	0.0059	0.14	<0.002	<0.006	<0.006	**4.7**	0.0054	**0.21**	0.013	<0.005	<0.2	**0.15**	0.018
	02/23/16	200.7/200.8	0.0032	0.14	<0.002	0.0028	<0.006	**3.7**	0.0047	0.18	0.0043	<0.005	0.069	**0.16**	0.018
	11/04/15	200.7/200.8	*<0.01**	0.17	<0.002	<0.006	<0.006	**7.4**	0.0072	**0.32**	0.02	<0.005	<1	**0.14**	0.028
	08/20/15	200.7/200.8	*<0.01**	0.18	<0.002	<0.006	0.0077	**4.8**	0.005	0.2	<0.01	<0.005	<0.2	**0.17**	0.02
	06/09/15	200.7/200.8	*<0.01**	0.19	<0.002	0.0064	<0.006	**5.2**	0.0051	0.2	<0.01	<0.005	<0.2	**0.16**	0.022
	03/11/15	200.7/200.8	*<0.01**	0.14	<0.002	<0.006	<0.006	**2.5**	0.0028	0.097	0.013	<0.005	<0.2	**0.17**	0.014
	11/14/14	200.7/200.8	0.0054	0.12	<0.002	<0.006	<0.006	**2**	<0.005	**0.38**	*<0.05**	<0.005	<0.2	**0.11**	0.015

8.17.2 MKTF WELLS

Total Metals Analytical Result Summary

STANDARDS			PARAMETERS												
			Arsenic (mg/L)	Barium (mg/L)	Cadmium (mg/L)	Chromium (mg/L)	Copper (mg/L)	Iron (mg/L)	Lead (mg/L)	Manganese (mg/L)	Selenium (mg/L)	Silver (mg/L)	Mercury (ug/L)	Uranium (mg/L)	Zinc (mg/L)
WQCC 20 NMAC 6.2.3103 (DEC 2018)			**0.01**	**2**	**0.005**	**0.05**	**1**	**1**	**0.015**	**0.2**	**0.05**	**0.05**	**2**	**0.03**	**10**
40 CFR 141.62 MCL			0.01	2	0.005	0.1	1.3	NE	0.015	NE	0.05	NE	2	0.03	NE
NMED Tap Water (JUNE 2019)			0.000855	3.28	0.00624	0.0057	0.7898	13.8	NE	2.02	0.0987	0.0812	0.626	0.0592	5.96
EPA RSL for Tap Water (NOVEMBER 2019)			0.000052	3.8	0.0092	NE	0.8	14	0.015	0.43	0.1	0.094	0.63	0.004	6
WELL ID	**DATE SAMPLED**	**METHOD**													
MKTF-29	10/22/19	200.7/200.8	<0.005	0.092	<0.002	<0.006	0.0057	0.66	0.00064	**2.1**	<0.005	0.0034	0.042	NA	0.0069
	08/23/19	200.7/200.8	0.00093	0.046	<0.002	<0.006	<0.006	0.27	0.00025	**1.1**	<0.001	0.0019	0.081	0.0079	<0.01
	05/06/19	200.7/200.8	<0.005	0.073	<0.002	<0.006	<0.006	**1.2**	0.00082	**0.71**	<0.005	0.0031	<0.2	0.0091	0.0086
	03/28/19	200.7/200.8	0.001	0.051	<0.002	<0.006	<0.006	0.57	0.00043	**0.6**	<0.001	<0.005	0.085	0.0088	<0.01
	11/15/18	200.7/200.8	0.0015	0.037	<0.002	<0.006	0.0051	0.24	0.00023	**0.47**	<0.001	0.0023	<0.2	0.0081	0.0034
	08/20/18	200.7/200.8	0.002	0.15	<0.002	0.004	0.0078	**4.5**	0.0023	**0.6**	<0.001	0.0018	<0.2	0.0085	0.012
	05/01/18	200.7/200.8	0.0021	0.15	<0.002	0.0031	0.0052	**3.7**	0.0017	**0.55**	<0.005	<0.005	0.06	0.0084	0.01
	02/06/18	200.7/200.8	0.00014	0.17	<0.002	0.0052	0.0072	**3.9**	0.0025	**0.65**	<0.01	<0.005	0.1	0.01	0.014
	11/20/17	200.7/200.8	0.0023	0.32	<0.002	<0.006	0.012	**8**	0.006	**1.1**	0.0023	<0.005	<0.2	0.0094	0.016
	10/03/17	200.7/200.8	0.002	0.11	<0.002	0.0036	0.0048	**2.9**	0.0021	**0.73**	0.0027	<0.005	<0.2	NA	0.0085
	06/05/17	200.7/200.8	0.0022	0.22	<0.002	0.0073	0.0075	**5.5**	0.0038	**0.74**	0.0033	<0.005	0.057	0.012	0.011
	03/29/17	200.7/200.8	0.0019	0.1	<0.002	0.004	0.0034	**2.8**	0.0016	**0.47**	0.0022	<0.005	<0.2	0.012	0.0059
	10/28/16	200.7/200.8	0.0018	0.1	<0.002	<0.006	0.0039	**1.6**	0.002	**0.47**	0.002	<0.005	<0.2	0.013	0.005
	09/07/16	200.7/200.8	0.0018	0.13	<0.002	<0.006	0.0044	**2.6**	0.0028	**0.52**	0.0022	<0.005	0.066	0.011	0.0084
	06/09/16	200.7/200.8	0.0013	0.076	<0.002	<0.006	<0.006	**1.5**	**2**	**0.44**	0.0017	<0.005	0.076	0.012	0.013
	02/23/16	200.7/200.8	0.0013	0.062	<0.002	<0.006	<0.006	0.9	0.0007	**0.51**	0.001	<0.005	0.061	0.014	0.0044
	11/04/15	200.7/200.8	0.002	0.089	<0.002	<0.006	<0.006	**1.3**	0.0011	**0.61**	<0.005	<0.005	<0.2	0.017	<0.01
	08/20/15	200.7/200.8	0.0021	0.17	<0.002	<0.006	0.011	**3.9**	0.0028	**0.6**	0.0022	<0.005	<0.2	0.02	0.016
	06/10/15	200.7/200.8	<0.005	0.1	<0.002	<0.006	<0.006	**2.4**	<0.0025	**0.41**	<0.005	<0.005	<0.2	0.02	0.011
	03/11/15	200.7/200.8	0.002	0.057	<0.002	<0.006	<0.006	0.81	<0.001	**0.36**	0.0023	<0.005	<0.2	0.023	<0.01

8.17.2 MKTF WELLS

Total Metals Analytical Result Summary

STANDARDS			PARAMETERS												
			Arsenic (mg/L)	Barium (mg/L)	Cadmium (mg/L)	Chromium (mg/L)	Copper (mg/L)	Iron (mg/L)	Lead (mg/L)	Manganese (mg/L)	Selenium (mg/L)	Silver (mg/L)	Mercury (ug/L)	Uranium (mg/L)	Zinc (mg/L)
WQCC 20 NMAC 6.2.3103 (DEC 2018)			**0.01**	**2**	**0.005**	**0.05**	**1**	**1**	**0.015**	**0.2**	**0.05**	**0.05**	**2**	**0.03**	**10**
40 CFR 141.62 MCL			0.01	2	0.005	0.1	1.3	NE	0.015	NE	0.05	NE	2	0.03	NE
NMED Tap Water (JUNE 2019)			0.000855	3.28	0.00624	0.0057	0.7898	13.8	NE	2.02	0.0987	0.0812	0.626	0.0592	5.96
EPA RSL for Tap Water (NOVEMBER 2019)			0.000052	3.8	0.0092	NE	0.8	14	0.015	0.43	0.1	0.094	0.63	0.004	6
WELL ID	**DATE SAMPLED**	**METHOD**													
MKTF-30	10/23/19	200.7/200.8	0.0019	0.16	<0.002	0.0033	<0.006	**4.9**	0.0034	**0.50**	<0.005	0.0016	0.22	NA	0.012
	08/23/19	200.7/200.8	0.019	0.27	<0.002	0.0061	0.0075	**7**	0.0073	**0.95**	0.0012	<0.005	0.12	**0.031**	0.02
	05/06/19	200.7/200.8	<0.005	0.16	<0.002	0.0046	<0.006	**5.3**	0.0042	**0.21**	<0.005	0.0019	*<5**	**0.034**	0.013
	03/28/19	200.7/200.8	0.0021	0.25	<0.002	0.0068	<0.006	**9.5**	0.0084	**0.41**	<0.005	<0.005	0.084	**0.038**	0.025
	11/15/18	200.7/200.8	0.0012	0.048	<0.002	<0.006	<0.006	0.75	0.00076	0.19	<0.001	0.0019	<0.2	0.028	0.0048
	08/20/18	200.7/200.8	0.0015	0.057	<0.002	0.0021	<0.006	**2.4**	0.0011	0.15	<0.001	<0.005	0.045	**0.031**	0.0069
	05/01/18	200.7/200.8	0.0023	0.11	<0.002	0.0041	0.0047	**5.1**	0.0029	0.14	<0.005	<0.005	0.083	**0.039**	0.014
	02/06/18	200.7/200.8	0.0017	0.087	<0.002	0.003	0.0051	**2.8**	0.0025	0.12	<0.005	<0.005	0.07	0.03	0.011
	11/20/17	200.7/200.8	0.0025	0.081	<0.002	0.002	0.006	**2.5**	0.0021	**0.21**	<0.005	<0.005	<0.2	**0.031**	0.021
	10/03/17	200.7/200.8	0.0023	0.18	<0.002	0.0075	0.0068	**7.1**	0.007	**0.66**	0.0036	<0.005	<0.2	NA	0.018
	06/05/17	200.7/200.8	0.0024	0.26	<0.002	0.0077	0.006	**8.5**	0.007	**0.38**	0.0035	<0.005	0.06	**0.044**	0.017
	03/29/17	200.7/200.8	0.0035	0.33	<0.002	0.0078	0.0043	**7.9**	0.0093	**0.5**	0.0073	<0.005	0.042	**0.033**	<0.01
	10/28/16	200.7/200.8	0.0022	0.16	<0.002	0.0031	<0.006	**3**	0.0045	**0.32**	0.0065	<0.005	<0.2	0.03	0.0088
	09/07/16	200.7/200.8	0.0024	0.074	<0.002	<0.006	<0.006	**1.7**	0.0039	0.18	0.0081	<0.005	0.068	0.027	0.0063
	06/09/16	200.7/200.8	0.0033	0.83	<0.002	0.0098	0.0066	**13**	**0.022**	**1.1**	0.0069	<0.005	0.1	**0.035**	0.039
	02/23/16	200.7/200.8	0.0017	0.12	<0.002	0.0032	<0.006	**3.3**	0.0041	0.18	0.0031	<0.005	0.069	0.029	0.013
	11/04/15	200.7/200.8	<0.005	0.24	<0.002	<0.006	<0.006	**7.1**	0.0097	**0.54**	<0.02	<0.005	<0.2	0.026	0.021
	08/20/15	200.7/200.8	<0.005	0.29	<0.002	0.011	0.0084	**8.4**	0.0094	**0.55**	<0.01	<0.005	<0.2	**0.032**	0.024
	06/10/15	200.7/200.8	<0.005	0.28	<0.002	0.0067	<0.006	**7.7**	0.0089	**0.57**	<0.01	<0.005	<0.2	**0.034**	0.024
	03/11/15	200.7/200.8	<0.005	0.29	<0.002	0.0072	<0.006	**8.6**	0.011	**0.64**	0.0079	<0.005	<0.2	**0.044**	0.021
	11/17/14	200.7/200.8	<0.005	0.26	<0.002	0.007	<0.006	**8**	0.009	**0.72**	0.01	<0.005	<0.2	**0.039**	0.029

8.17.2 MKTF WELLS

Total Metals Analytical Result Summary

STANDARDS			PARAMETERS												
			Arsenic (mg/L)	Barium (mg/L)	Cadmium (mg/L)	Chromium (mg/L)	Copper (mg/L)	Iron (mg/L)	Lead (mg/L)	Manganese (mg/L)	Selenium (mg/L)	Silver (mg/L)	Mercury (ug/L)	Uranium (mg/L)	Zinc (mg/L)
WQCC 20 NMAC 6.2.3103 (DEC 2018)			**0.01**	**2**	**0.005**	**0.05**	**1**	**1**	**0.015**	**0.2**	**0.05**	**0.05**	**2**	**0.03**	**10**
40 CFR 141.62 MCL			0.01	2	0.005	0.1	1.3	NE	0.015	NE	0.05	NE	2	0.03	NE
NMED Tap Water (JUNE 2019)			0.000855	3.28	0.00624	0.0057	0.7898	13.8	NE	2.02	0.0987	0.0812	0.626	0.0592	5.96
EPA RSL for Tap Water (NOVEMBER 2019)			0.000052	3.8	0.0092	NE	0.8	14	0.015	0.43	0.1	0.094	0.63	0.004	6
WELL ID	**DATE SAMPLED**	**METHOD**													
MKTF-31	10/24/19	200.7/200.8	<0.005	0.21	<0.002	0.0025	<0.006	**3.8**	<0.0005	0.17	<0.005	0.0029	<0.2	NA	0.011
	08/23/19	200.7/200.8	0.00098	0.16	<0.002	<0.006	<0.006	**2**	0.0018	0.074	0.00091	0.0023	0.12	**0.039**	0.0091
	05/06/19	200.7/200.8	<0.005	0.21	<0.002	<0.006	<0.006	**2.1**	0.0016	0.052	<0.005	0.0059	<0.2	**0.046**	0.0084
	02/20/19	200.7/200.8	<0.005	0.17	<0.002	<0.006	<0.006	**1.7**	0.0016	0.06	<0.005	0.0033	0.054	**0.039**	<0.01
	11/15/18	200.7/200.8	0.0023	0.21	<0.002	0.0019	<0.006	**4.1**	0.0046	0.16	<0.001	0.0038	0.062	**0.042**	0.013
	08/17/18	200.7/200.8	<0.005	0.15	<0.002	<0.006	<0.006	**2**	<0.0025	0.098	<0.005	0.0033	0.067	**0.038**	0.0048
	05/06/18	200.7/200.8	0.0021	0.13	<0.002	<0.006	<0.006	0.77	0.00061	0.053	<0.005	0.0025	0.041	**0.044**	0.0034
	02/05/18	200.7/200.8	<0.005	0.15	<0.002	<0.006	<0.006	**2**	0.0021	0.097	<0.005	0.0052	0.054	**0.044**	0.0068
	11/21/17	200.7/200.8	0.0021	0.14	<0.002	<0.006	0.0044	**2**	0.0018	0.083	<0.005	0.0018	<0.2	**0.039**	<0.01
	09/25/17	200.7/200.8	0.0025	0.17	<0.002	0.0023	<0.006	**1.3**	0.0023	0.14	0.0081	<0.005	<0.2	NA	0.0043
	06/05/17	200.7/200.8	0.0026	0.16	<0.002	0.0019	<0.006	**1.3**	0.0014	0.053	0.0069	<0.005	0.059	**0.051**	0.0052
	03/07/17	200.7/200.8	0.0049	0.25	<0.002	0.0027	<0.006	**3.8**	0.005	0.19	0.011	<0.005	<0.2	NA	0.013
	10/31/16	200.7/200.8	0.0026	0.18	<0.002	<0.006	<0.006	**1.5**	0.0031	0.11	0.0064	<0.005	<0.2	**0.041**	0.0098
	09/08/16	200.7/200.8	0.0029	0.2	<0.002	<0.006	0.0065	**1.7**	0.0043	0.17	*<0.05**	<0.005	0.09	**0.044**	0.013
	06/09/16	200.7/200.8	0.0022	0.33	<0.002	0.0051	<0.006	**4.8**	0.0084	**0.34**	0.0076	<0.005	0.082	**0.046**	0.017
	02/23/16	200.7/200.8	<0.005	0.18	<0.002	0.0023	<0.006	**2.5**	0.0036	0.13	0.0026	<0.005	0.068	**0.045**	0.011
	11/04/15	200.7/200.8	<0.005	0.26	<0.002	<0.006	<0.006	**4**	0.0064	**0.25**	<0.02	<0.005	<0.2	**0.041**	0.015
	08/21/15	200.7/200.8	*<0.01**	0.19	<0.002	<0.006	<0.006	**3.1**	0.0032	0.13	0.0046	<0.005	<0.2	**0.049**	<0.01
	06/10/15	200.7/200.8	<0.005	0.17	<0.002	<0.006	<0.006	**2.9**	0.0029	0.11	<0.005	<0.005	<0.2	**0.049**	0.011
	03/11/15	200.7/200.8	*<0.01**	0.2	<0.002	<0.006	<0.006	**2.2**	<0.01	0.12	<0.01	<0.005	<0.2	**0.056**	<0.01
	11/17/14	200.7/200.8	<0.005	0.22	<0.002	<0.006	<0.006	**2.9**	0.0041	**0.24**	0.008	<0.005	<0.2	**0.05**	0.017

8.17.2 MKTF WELLS

Total Metals Analytical Result Summary

STANDARDS			PARAMETERS												
			Arsenic (mg/L)	Barium (mg/L)	Cadmium (mg/L)	Chromium (mg/L)	Copper (mg/L)	Iron (mg/L)	Lead (mg/L)	Manganese (mg/L)	Selenium (mg/L)	Silver (mg/L)	Mercury (ug/L)	Uranium (mg/L)	Zinc (mg/L)
WQCC 20 NMAC 6.2.3103 (DEC 2018)			**0.01**	**2**	**0.005**	**0.05**	**1**	**1**	**0.015**	**0.2**	**0.05**	**0.05**	**2**	**0.03**	**10**
40 CFR 141.62 MCL			0.01	2	0.005	0.1	1.3	NE	0.015	NE	0.05	NE	2	0.03	NE
NMED Tap Water (JUNE 2019)			0.000855	3.28	0.00624	0.0057	0.7898	13.8	NE	2.02	0.0987	0.0812	0.626	0.0592	5.96
EPA RSL for Tap Water (NOVEMBER 2019)			0.000052	3.8	0.0092	NE	0.8	14	0.015	0.43	0.1	0.094	0.63	0.004	6
WELL ID	**DATE SAMPLED**	**METHOD**													
MKTF-32	10/23/19	200.7/200.8	0.0034	0.19	<0.002	0.003	0.0046	**5.5**	0.0042	0.16	<0.005	<0.005	0.19	NA	0.023
	08/20/19	200.7/200.8	0.0024	0.076	<0.002	<0.006	0.005	**1.2**	0.0013	0.11	0.00077	<0.005	<0.2	**0.056**	0.0059
	05/07/19	200.7/200.8	0.0024	0.084	<0.002	<0.006	<0.006	**1.5**	0.0015	0.12	<0.001	<0.005	0.066	**0.057**	<0.01
	02/13/19	200.7/200.8	0.0024	0.056	<0.002	<0.006	<0.006	0.17	0.00031	0.079	<0.001	<0.005	0.042	**0.049**	<0.01
	11/15/18	200.7/200.8	0.0026	0.07	<0.002	<0.006	0.0042	0.81	0.00099	0.1	<0.001	<0.005	0.047	**0.055**	0.0068
	08/28/18	200.7/200.8	0.0032	0.12	<0.002	<0.006	0.0083	**2.9**	0.0023	0.11	<0.001	<0.005	0.083	**0.055**	0.014
	05/09/18	200.7/200.8	0.0029	0.055	<0.002	<0.006	0.0049	0.51	0.00043	0.06	<0.001	<0.005	0.058	**0.058**	<0.01
	02/07/18	200.7/200.8	<0.005	0.1	<0.002	0.0031	0.0064	**2.1**	0.0019	0.11	<0.01	<0.005	0.096	**0.06**	0.013
	11/27/17	200.7/200.8	<0.005	0.067	<0.002	<0.006	0.0042	0.75	<0.0025	0.079	<0.005	<0.005	<0.2	**0.058**	<0.01
	09/25/17	200.7/200.8	0.0035	0.1	<0.002	0.0035	<0.006	**2.2**	0.0021	0.15	0.0045	0.0013	0.069	NA	<0.01
	06/06/17	200.7/200.8	0.0046	0.22	<0.002	0.0064	0.011	**6.4**	0.0055	**0.23**	0.0063	<0.005	0.068	**0.065**	0.024
	03/07/17	200.7/200.8	0.0046	0.055	<0.002	<0.006	<0.006	0.51	0.00083	0.08	0.0091	<0.005	<0.2	NA	0.003
	10/31/16	200.7/200.8	0.0044	0.1	<0.002	0.0028	0.0042	**3**	0.0033	0.13	0.006	<0.005	<0.2	**0.059**	0.012
	09/09/16	200.7/200.8	0.0047	0.086	<0.002	<0.006	0.013	**1.8**	0.0023	0.12	0.0069	<0.005	<0.2	**0.058**	0.016
	06/09/16	200.7/200.8	0.0042	0.35	<0.002	0.0072	<0.006	**7**	0.01	**0.4**	0.0072	<0.005	0.12	**0.066**	0.036
	02/24/16	200.7/200.8	0.0034	0.097	<0.002	<0.006	<0.006	**2**	0.0028	0.13	0.0031	<0.005	<0.2	**0.062**	0.013
	11/05/15	200.7/200.8	0.0052	0.16	<0.002	<0.006	<0.006	**3.2**	0.0046	**0.22**	0.0083	<0.005	<0.2	**0.061**	0.015
	08/21/15	200.7/200.8	0.0037	0.24	<0.002	0.0072	<0.006	**6.1**	0.0072	**0.3**	<0.01	<0.005	<0.2	**0.073**	0.029
	06/09/15	200.7/200.8	<0.005	0.24	<0.002	<0.006	0.018	**5.7**	0.0063	**0.31**	<0.005	<0.005	<0.2	**0.066**	0.034
	03/12/15	200.7/200.8	*<0.01**	0.085	<0.002	<0.006	<0.006	**1.6**	0.0018	0.12	0.01	<0.005	<0.2	**0.067**	<0.01
	11/17/14	200.7/200.8	<0.005	0.091	<0.002	<0.006	<0.006	**2**	0.0027	**0.23**	<0.01	<0.005	<0.2	**0.067**	0.014

8.17.2 MKTF WELLS

Total Metals Analytical Result Summary

STANDARDS			PARAMETERS												
			Arsenic (mg/L)	Barium (mg/L)	Cadmium (mg/L)	Chromium (mg/L)	Copper (mg/L)	Iron (mg/L)	Lead (mg/L)	Manganese (mg/L)	Selenium (mg/L)	Silver (mg/L)	Mercury (ug/L)	Uranium (mg/L)	Zinc (mg/L)
WQCC 20 NMAC 6.2.3103 (DEC 2018)			**0.01**	**2**	**0.005**	**0.05**	**1**	**1**	**0.015**	**0.2**	**0.05**	**0.05**	**2**	**0.03**	**10**
40 CFR 141.62 MCL			0.01	2	0.005	0.1	1.3	NE	0.015	NE	0.05	NE	2	0.03	NE
NMED Tap Water (JUNE 2019)			0.000855	3.28	0.00624	0.0057	0.7898	13.8	NE	2.02	0.0987	0.0812	0.626	0.0592	5.96
EPA RSL for Tap Water (NOVEMBER 2019)			0.000052	3.8	0.0092	NE	0.8	14	0.015	0.43	0.1	0.094	0.63	0.004	6
WELL ID	**DATE SAMPLED**	**METHOD**													
MKTF-33	10/24/19	200.7/200.8	0.0011	0.21	<0.002	0.0021	<0.006	**4.5**	0.0031	**0.48**	0.00055	<0.005	0.13	NA	0.012
	08/20/19	200.7/200.8	0.001	0.16	<0.002	<0.006	<0.006	**2.6**	0.0029	**0.57**	0.00095	0.0015	<0.2	**0.035**	0.01
	05/09/19	200.7/200.8	0.0011	0.25	<0.002	0.0033	0.0051	**4.4**	0.004	**0.32**	<0.001	<0.005	0.08	**0.033**	0.025
	03/26/19	200.7/200.8	0.00072	0.099	<0.002	<0.006	0.0041	0.88	0.00085	**0.4**	0.00054	0.0017	0.092	**0.036**	<0.01
	11/28/18	200.7/200.8	0.001	0.13	<0.002	<0.006	0.0045	**2.7**	0.0019	**0.45**	<0.001	0.0024	NA	NA	0.007
	08/30/18	200.7/200.8	0.0012	0.12	<0.002	<0.006	<0.006	**3.1**	0.0019	**0.42**	<0.001	<0.005	0.047	**0.032**	0.0091
	05/10/18	200.7/200.8	0.00059	0.1	<0.002	<0.006	<0.006	**1.6**	0.0016	**0.22**	<0.001	0.0017	0.064	**0.034**	0.0043
	02/08/18	200.7/200.8	0.0018	0.15	<0.002	0.002	<0.006	**4**	0.0037	**0.41**	0.0015	0.0017	0.098	**0.035**	0.011
	11/28/17	200.7/200.8	*<0.02**	0.18	<0.002	<0.006	0.0045	**3**	0.0036	**0.39**	0.0011	<0.005	NA	**0.033**	0.0095
	09/25/17	200.7/200.8	<0.005	0.22	<0.002	0.0058	<0.006	**4.4**	0.0046	**0.6**	<0.005	<0.005	<0.2	NA	0.012
	06/08/17	200.7/200.8	0.002	0.49	<0.002	0.01	0.0062	**9.8**	0.013	**0.83**	0.003	<0.005	0.081	**0.037**	0.028
	03/08/17	200.7/200.8	0.0024	0.13	<0.002	<0.006	<0.006	**3.6**	0.0027	**0.41**	0.0054	<0.005	<0.2	NA	0.0067
	11/01/16	200.7/200.8	0.0021	0.11	<0.002	<0.006	<0.006	**3.1**	0.0025	**0.25**	0.0024	<0.005	<0.2	**0.034**	0.006
	09/10/16	200.7/200.8	<0.005	0.091	<0.002	<0.006	<0.006	**1.6**	0.0027	**0.31**	0.0031	<0.005	<0.2	**0.036**	0.0075
	06/10/16	200.7/200.8	0.0019	0.33	<0.002	0.0075	<0.006	**6.2**	0.0098	**0.96**	0.0038	<0.005	0.056	**0.04**	0.028
	02/25/16	200.7/200.8	0.0012	1.3	<0.002	0.015	0.022	**18**	0.0067	**2.7**	0.0016	<0.005	<0.2	**0.04**	0.016
	11/09/15	200.7/200.8	0.0036	1.3	<0.002	0.015	0.022	**18**	**0.036**	**2.7**	<0.005	<0.005	<0.2	**0.045**	0.065
	08/21/15	200.7/200.8	0.002	0.74	<0.002	0.015	0.01	**14**	**0.022**	**1.6**	0.0019	<0.005	<0.2	**0.049**	0.048
	06/09/15	200.7/200.8	<0.005	0.26	<0.002	<0.006	<0.006	**4.1**	0.0058	**0.7**	<0.005	<0.005	<0.2	**0.044**	0.02
	03/12/15	200.7/200.8	<0.005	0.25	<0.002	0.0062	<0.006	**3.7**	0.0059	**0.68**	0.0041	<0.005	<0.2	**0.045**	0.014
	11/17/14	200.7/200.8	0.0016	0.18	<0.002	<0.006	<0.006	**3.3**	0.005	**0.92**	0.0031	<0.005	<0.2	**0.043**	0.018

8.17.2 MKTF WELLS

Total Metals Analytical Result Summary

STANDARDS			PARAMETERS												
			Arsenic (mg/L)	Barium (mg/L)	Cadmium (mg/L)	Chromium (mg/L)	Copper (mg/L)	Iron (mg/L)	Lead (mg/L)	Manganese (mg/L)	Selenium (mg/L)	Silver (mg/L)	Mercury (ug/L)	Uranium (mg/L)	Zinc (mg/L)
WQCC 20 NMAC 6.2.3103 (DEC 2018)			**0.01**	**2**	**0.005**	**0.05**	**1**	**1**	**0.015**	**0.2**	**0.05**	**0.05**	**2**	**0.03**	**10**
40 CFR 141.62 MCL			0.01	2	0.005	0.1	1.3	NE	0.015	NE	0.05	NE	2	0.03	NE
NMED Tap Water (JUNE 2019)			0.000855	3.28	0.00624	0.0057	0.7898	13.8	NE	2.02	0.0987	0.0812	0.626	0.0592	5.96
EPA RSL for Tap Water (NOVEMBER 2019)			0.000052	3.8	0.0092	NE	0.8	14	0.015	0.43	0.1	0.094	0.63	0.004	6
WELL ID	**DATE SAMPLED**	**METHOD**													
MKTF-34	10/29/19	200.7/200.8	<0.005	0.17	<0.002	<0.006	<0.006	**1.3**	0.001	0.033	0.0044	0.0025	0.15	NA	0.014
	08/19/19	200.7/200.8	0.00095	0.19	<0.002	<0.006	<0.006	**2**	0.0014	0.045	0.0014	0.0019	0.099	0.02	0.017
	05/09/19	200.7/200.8	0.00065	0.25	<0.002	<0.006	<0.006	0.94	0.00089	0.024	0.0014	0.0036	<0.2	0.015	0.0092
	03/26/19	200.7/200.8	0.00045	0.35	<0.002	<0.006	<0.006	0.39	0.0044	0.011	0.00088	0.0039	0.082	0.012	<0.01
	11/28/18	200.7/200.8	0.0012	0.053	<0.002	<0.006	<0.006	0.63	0.00048	0.013	0.0022	0.0016	NA	NA	0.0079
	08/24/18	200.7/200.8	0.0016	0.06	<0.002	<0.006	<0.006	0.83	0.00073	0.022	0.0024	0.0022	0.4	0.03	0.012
	05/04/18	200.7/200.8	0.0015	0.049	<0.002	<0.006	<0.006	0.34	0.00033	0.0078	0.0027	<0.005	0.15	**0.037**	0.0068
	02/16/18	200.7/200.8	0.0044	0.083	<0.002	<0.006	<0.006	**2.2**	0.0023	0.045	0.0053	<0.005	0.21	**0.038**	0.018
	12/01/17	200.7/200.8	0.0016	0.093	<0.002	<0.006	<0.006	**2.2**	0.0022	0.039	0.0063	<0.005	0.041	**0.038**	0.012
	09/26/17	200.7/200.8	0.004	0.12	<0.002	0.0032	0.0033	**3.8**	0.0018	0.086	0.012	<0.005	0.12	NA	0.032
	06/14/17	200.7/200.8	0.0019	0.099	<0.002	0.0016	<0.006	**1.6**	0.0017	0.037	0.011	<0.005	0.05	NA	0.015
	03/01/17	200.7/200.8	0.0034	0.11	<0.002	<0.006	<0.006	**1.8**	0.002	0.049	0.011	NA	0.18	NA	0.018
	11/08/16	200.7/200.8	0.0026	0.085	<0.002	<0.006	<0.006	0.66	0.00087	0.017	0.011	<0.005	0.24	**0.038**	0.0074
	09/13/16	200.7/200.8	0.0044	0.12	<0.002	<0.006	<0.006	0.62	0.0008	0.014	0.011	<0.005	0.15	**0.034**	0.0078
	06/10/16	200.7/200.8	0.0047	0.15	<0.002	<0.006	<0.006	**2.3**	0.0026	0.054	0.014	<0.005	<0.2	**0.032**	0.024
	02/25/16	200.7/200.8	0.003	0.15	<0.002	<0.006	<0.006	**1.6**	0.0016	0.044	0.0067	<0.005	<0.2	**0.032**	0.023
	11/03/15	200.7/200.8	<0.005	0.15	<0.002	<0.006	<0.006	1	0.0012	0.03	<0.02	<0.005	<0.2	0.027	0.012
	08/18/15	200.7/200.8	<0.005	0.17	<0.002	<0.006	<0.006	**2.4**	0.0027	0.074	0.0086	<0.005	<0.2	**0.031**	0.03
	06/08/15	200.7/200.8	<0.005	0.2	<0.002	<0.006	<0.006	**2.3**	<0.0025	0.066	<0.01	<0.005	<0.2	0.028	0.024
	03/12/15	200.7/200.8	*<0.01**	0.25	<0.002	<0.006	<0.006	**5.2**	0.0045	0.15	0.013	<0.005	<0.2	0.028	0.059
	11/17/14	200.7/200.8	*<0.01**	0.17	<0.002	<0.006	<0.006	**2.4**	0.0014	0.075	<0.02	<0.005	<0.2	0.026	0.037

8.17.2 MKTF WELLS

Total Metals Analytical Result Summary

STANDARDS			PARAMETERS												
			Arsenic (mg/L)	Barium (mg/L)	Cadmium (mg/L)	Chromium (mg/L)	Copper (mg/L)	Iron (mg/L)	Lead (mg/L)	Manganese (mg/L)	Selenium (mg/L)	Silver (mg/L)	Mercury (ug/L)	Uranium (mg/L)	Zinc (mg/L)
WQCC 20 NMAC 6.2.3103 (DEC 2018)			**0.01**	**2**	**0.005**	**0.05**	**1**	**1**	**0.015**	**0.2**	**0.05**	**0.05**	**2**	**0.03**	**10**
40 CFR 141.62 MCL			0.01	2	0.005	0.1	1.3	NE	0.015	NE	0.05	NE	2	0.03	NE
NMED Tap Water (JUNE 2019)			0.000855	3.28	0.00624	0.0057	0.7898	13.8	NE	2.02	0.0987	0.0812	0.626	0.0592	5.96
EPA RSL for Tap Water (NOVEMBER 2019)			0.000052	3.8	0.0092	NE	0.8	14	0.015	0.43	0.1	0.094	0.63	0.004	6
WELL ID	**DATE SAMPLED**	**METHOD**													
MKTF-35	10/29/19	200.7/200.8	0.0022	**2.7**	<0.002	0.0017	<0.006	**8.3**	0.0062	**3.5**	<0.005	0.0027	<0.2	NA	0.014
	08/19/19	200.7/200.8	0.004	**3.3**	<0.002	0.0052	0.0072	**9.8**	0.011	**4**	0.0017	0.0027	0.042	0.0089	0.025
	05/16/19	200.7/200.8	0.0011	0.32	<0.002	<0.006	<0.006	**4.5**	0.0039	**3.7**	0.00064	0.0022	<0.2	0.0038	<0.01
	03/26/19	200.7/200.8	0.0019	1.87	<0.002	<0.006	<0.006	**7.7**	0.0055	**3.4**	0.0012	0.0021	0.085	0.0036	0.014
	11/28/18	200.7/200.8	0.0019	1.1	<0.002	0.0027	<0.006	**6.7**	0.0031	**3**	<0.001	0.0033	NA	NA	0.0074
	08/23/18	200.7/200.8	0.0027	1.2	<0.002	<0.006	<0.006	**5.6**	0.0037	**3.4**	<0.001	0.0031	0.099	0.0034	0.0084
	05/03/18	200.7/200.8	0.0036	**2.2**	<0.002	0.0036	0.0059	**8.5**	0.0073	**4**	<0.001	0.0016	0.055	0.0038	0.014
	02/15/18	200.7/200.8	0.0037	1.3	<0.002	<0.006	<0.006	**6.2**	0.0045	**3.4**	0.0041	0.0023	<0.2	0.0034	0.012
	11/30/17	200.7/200.8	0.00075	1.6	<0.002	<0.006	<0.006	**6.9**	0.005	**3.6**	<0.005	0.0018	0.04	0.0028	<0.01
	09/27/17	200.7/200.8	0.0035	**5.2**	<0.002	0.014	0.013	**14**	**0.017**	**5**	0.0057	<0.005	0.054	NA	0.027
	06/14/17	200.7/200.8	0.0023	**3.9**	<0.002	0.0088	0.0097	**11**	0.013	**4.4**	0.0075	<0.005	0.045	NA	0.022
	03/01/17	200.7/200.8	0.0021	1.9	<0.002	0.0055	<0.006	**8.6**	0.0087	**4.3**	0.0029	<0.005	0.15	NA	0.016
	11/03/16	200.7/200.8	0.0035	1.2	<0.002	0.011	0.012	**22**	**0.019**	**5.5**	0.0024	<0.005	0.11	0.0039	0.039
	09/13/16	200.7/200.8	0.0024	**2.3**	<0.002	0.0045	0.0044	**8.6**	0.012	**3.8**	0.002	<0.005	0.091	0.0021	0.017
	06/10/16	200.7/200.8	0.00093	0.89	<0.002	0.0023	<0.006	**4.5**	0.0049	**3.3**	0.0013	<0.005	<0.2	0.002	0.0074
	02/26/16	200.7/200.8	0.0018	**3.3**	<0.002	0.0087	<0.006	**9.1**	0.013	**4.1**	0.00075	<0.005	<0.2	0.0029	0.026
	11/03/15	200.7/200.8	0.0023	**2.3**	<0.002	<0.006	<0.006	**7.5**	0.011	**4.5**	<0.005	<0.005	<0.2	0.0029	0.017
	08/18/15	200.7/200.8	0.0038	**8.7**	<0.002	0.016	0.02	**17**	**0.034**	**6.5**	<0.005	<0.005	<0.2	0.0054	0.051
	06/04/15	200.7/200.8	<0.005	**5**	<0.002	0.018	0.013	**13**	**0.023**	**6.4**	<0.005	<0.005	<0.2	0.0044	0.032
	03/17/15	200.7/200.8	0.004	**8.2**	<0.002	0.013	0.025	**15**	**0.034**	**6.3**	<0.005	<0.005	<0.2	0.0053	0.062

8.17.2 MKTF WELLS

Total Metals Analytical Result Summary

STANDARDS			PARAMETERS												
			Arsenic (mg/L)	Barium (mg/L)	Cadmium (mg/L)	Chromium (mg/L)	Copper (mg/L)	Iron (mg/L)	Lead (mg/L)	Manganese (mg/L)	Selenium (mg/L)	Silver (mg/L)	Mercury (ug/L)	Uranium (mg/L)	Zinc (mg/L)
WQCC 20 NMAC 6.2.3103 (DEC 2018)			**0.01**	**2**	**0.005**	**0.05**	**1**	**1**	**0.015**	**0.2**	**0.05**	**0.05**	**2**	**0.03**	**10**
40 CFR 141.62 MCL			0.01	2	0.005	0.1	1.3	NE	0.015	NE	0.05	NE	2	0.03	NE
NMED Tap Water (JUNE 2019)			0.000855	3.28	0.00624	0.0057	0.7898	13.8	NE	2.02	0.0987	0.0812	0.626	0.0592	5.96
EPA RSL for Tap Water (NOVEMBER 2019)			0.000052	3.8	0.0092	NE	0.8	14	0.015	0.43	0.1	0.094	0.63	0.004	6
WELL ID	**DATE SAMPLED**	**METHOD**													
MKTF-36	11/06/19	--	SPH Detected - No samples were collected.												
	08/19/19	--	Well paved over and inaccessible - no samples were collected												
	05/14/19	--	Well paved over and inaccessible - no samples were collected												
	03/25/19	--	Well paved over and inaccessible - no samples were collected												
	11/29/18	--	Well paved over and inaccessible - no samples were collected												
	05/03/18	200.7/200.8	**0.012**	**5.9**	<0.002	<0.006	<0.006	**13**	0.0051	**1.9**	<0.001	<0.005	0.052	0.00019	0.016
	02/15/18	200.7/200.8	0.0087	**6.4**	<0.002	<0.006	<0.006	**15**	0.0053	**1.8**	0.0028	<0.005	<0.2	0.00016	0.01
	11/30/17	200.7/200.8	0.0097	**6.6**	<0.002	<0.006	<0.006	**17**	0.0055	**1.7**	<0.01	<0.005	<0.2	<0.005	0.052
	09/27/17	200.7/200.8	**0.018**	**5.3**	<0.002	0.0053	0.012	**20**	**0.018**	**2**	0.0035	<0.005	0.047	NA	0.15
	06/14/17	200.7/200.8	**0.012**	**4.7**	<0.002	<0.006	<0.006	**16**	0.0084	**1.9**	0.0044	<0.005	<0.2	NA	0.076
	03/01/17	200.7/200.8	**0.013**	**5.8**	<0.002	<0.006	<0.006	**17**	0.0092	**2.1**	0.0032	<0.005	0.15	NA	0.066
	11/08/16	200.7/200.8	**0.018**	**6.6**	<0.002	<0.006	0.0068	**18**	0.01	**1.9**	0.0045	<0.005	<0.2	0.00085	0.16
	09/13/16	--	SPH Detected - No samples were collected.												
	06/10/16	--	SPH Detected - No samples were collected.												
	03/17/16	--	SPH Detected - No samples were collected.												
	11/03/15	--	SPH Detected - No samples were collected.												
	08/18/15	200.7/200.8	**0.016**	**5.7**	<0.002	<0.006	<0.006	**21**	**0.017**	**2.7**	<0.005	<0.005	<0.2	0.0011	0.018
	06/04/15	200.7/200.8	**0.017**	**6.8**	<0.002	0.0096	0.0078	**22**	**0.016**	**2.8**	<0.005	<0.005	<0.2	<0.0025	0.023
	03/17/15	200.7/200.8	**0.016**	**7**	<0.002	<0.006	<0.006	**22**	0.015	**2.8**	0.0057	<0.005	<0.2	0.0016	0.028
MKTF-37	10/28/19	--	SPH Detected - No samples were collected.												
	08/23/19	--	SPH Detected - No samples were collected.												
	05/16/19	--	SPH Detected - No samples were collected.												
	03/26/19	200.7/200.8	0.0018	0.49	<0.002	<0.006	0.0069	0.96	0.006	**0.24**	<0.001	<0.005	*<5**	0.0094	0.0061
	11/27/18	--	SPH Detected - No samples were collected.												
	08/23/18	200.7/200.8	0.0024	0.84	<0.002	<0.006	0.012	**4.8**	0.013	**0.49**	<0.001	<0.005	0.12	0.019	0.018
	05/03/18	200.7/200.8	0.0027	1.2	<0.002	<0.006	0.014	**3.4**	0.0046	**0.72**	<0.001	<0.005	0.094	0.013	0.0054
	02/15/18	--	SPH Detected - No samples were collected.												
	11/30/17	--	SPH Detected - No samples were collected.												
	09/27/17	--	SPH Detected - No samples were collected.												
	06/14/17	--	SPH Detected - No samples were collected.												
	03/01/17	200.7/200.8	0.004	1.3	<0.002	<0.006	0.0038	**11**	**0.027**	**1.5**	0.0034	<0.005	0.19	NA	0.027
	11/03/16	200.7/200.8	0.0034	0.69	<0.002	<0.006	0.005	**2.2**	0.0046	**0.55**	0.0036	<0.005	<0.2	0.025	0.015
	08/19/15	200.7/200.9	0.0031	0.24	<0.002	<0.006	0.0092	**5.7**	**0.024**	**1.7**	<0.005	<0.005	<0.2	0.02	0.074
	06/04/15	200.7/200.8	<0.005	0.23	<0.002	0.0063	0.0097	**4.8**	**0.036**	**2.6**	<0.005	<0.005	<0.2	0.024	0.044
	03/17/15	200.7/200.8	0.0032	0.23	<0.002	<0.006	0.012	**5.1**	**0.03**	**2.9**	0.0036	<0.005	<0.2	0.026	0.14

8.17.2 MKTF WELLS

Total Metals Analytical Result Summary

STANDARDS			PARAMETERS												
			Arsenic (mg/L)	Barium (mg/L)	Cadmium (mg/L)	Chromium (mg/L)	Copper (mg/L)	Iron (mg/L)	Lead (mg/L)	Manganese (mg/L)	Selenium (mg/L)	Silver (mg/L)	Mercury (ug/L)	Uranium (mg/L)	Zinc (mg/L)
WQCC 20 NMAC 6.2.3103 (DEC 2018)			**0.01**	**2**	**0.005**	**0.05**	**1**	**1**	**0.015**	**0.2**	**0.05**	**0.05**	**2**	**0.03**	**10**
40 CFR 141.62 MCL			0.01	2	0.005	0.1	1.3	NE	0.015	NE	0.05	NE	2	0.03	NE
NMED Tap Water (JUNE 2019)			0.000855	3.28	0.00624	0.0057	0.7898	13.8	NE	2.02	0.0987	0.0812	0.626	0.0592	5.96
EPA RSL for Tap Water (NOVEMBER 2019)			0.000052	3.8	0.0092	NE	0.8	14	0.015	0.43	0.1	0.094	0.63	0.004	6
WELL ID	**DATE SAMPLED**	**METHOD**													
MKTF-38	12/03/19	200.7/200.8	0.0016	0.24	<0.002	0.0032	<0.006	**3.6**	0.0041	**2.9**	0.0052	0.003	<0.2	0.021	0.013
	08/20/19	200.7/200.8	0.00068	0.069	<0.002	<0.006	<0.006	0.83	0.00083	**2.6**	0.0028	0.0028	<0.2	0.02	<0.01
	06/27/19	200.7/200.8	0.0013	0.29	<0.002	0.0024	<0.006	**4.1**	0.0047	**2.5**	0.0026	0.0072	<0.2	0.021	0.015
	05/14/19	200.7/200.8	0.00072	0.11	<0.002	<0.006	<0.006	**1.6**	0.0017	**2**	0.0017	<0.005	0.044	0.021	<0.01
	03/26/19	200.7/200.8	0.00078	0.14	<0.002	<0.006	<0.006	**2**	0.0019	**2**	0.0014	0.0024	0.075	0.02	0.0059
	11/20/18	200.7/200.8	0.0015	0.063	<0.002	<0.006	<0.006	0.23	0.00028	**2.8**	0.0019	0.0056	<0.2	NA	<0.01
	08/21/18	200.7/200.8	0.0029	0.18	<0.002	0.0018	<0.006	**2.8**	0.0026	**3**	<0.001	0.005	0.061	0.028	0.011
	05/03/18	200.7/200.8	0.0025	0.082	<0.002	<0.006	<0.006	**1.6**	0.0015	**2.4**	<0.001	0.002	0.045	0.027	0.0058
	02/12/18	200.7/200.8	0.0046	0.21	<0.002	<0.006	0.0053	**2.9**	0.0036	**1.8**	0.0058	0.0022	0.17	**0.031**	0.0089
	11/30/17	200.7/200.8	0.00069	0.1	<0.002	<0.006	<0.006	**1.7**	0.0019	**1.9**	0.003	0.0021	<0.2	0.027	<0.01
	09/28/17	200.7/200.8	0.0025	0.21	<0.002	0.005	0.0064	**3.5**	0.0039	**2.3**	0.0047	<0.005	<0.2	NA	0.01
	06/21/17	200.7/200.8	0.0023	0.36	<0.002	0.0056	0.0067	**6.6**	0.0077	**2.7**	0.0032	<0.005	0.041	0.026	0.019
	03/14/17	200.7/200.8	0.0022	0.31	<0.002	<0.006	0.0031	**5.8**	0.0072	**2.9**	0.0041	<0.005	<0.2	0.017	0.018
	11/01/16	200.7/200.8	0.0022	0.12	<0.002	<0.006	<0.006	**1.7**	0.0033	**3.3**	0.0035	<0.005	<0.2	0.014	0.0069
	09/13/16	200.7/200.8	0.0025	0.075	<0.002	<0.006	<0.006	0.61	0.001	**3**	0.0047	<0.005	0.065	0.014	0.0057
	06/08/16	200.7/200.8	0.0022	0.23	<0.002	<0.006	<0.006	**3**	0.0035	**3.8**	0.0051	<0.005	<0.2	0.014	0.025
	02/29/16	200.7/200.8	0.0017	0.14	<0.002	<0.006	<0.006	**2.3**	0.0035	**2.7**	0.0024	<0.005	<0.2	0.014	0.014
	11/09/15	200.7/200.8	0.005	0.93	<0.002	0.0096	0.0093	**11**	**0.02**	**4.2**	*<0.1**	<0.005	<0.2	0.02	0.035
	08/24/15	200.7/200.8	0.0028	0.49	<0.002	0.0062	0.0077	**7.2**	0.0096	**3.9**	0.0038	<0.005	<0.2	0.019	0.025
	06/10/15	200.7/200.8	<0.005	0.43	<0.002	0.006	<0.006	**6.4**	0.008	**3.7**	<0.005	<0.005	<0.2	0.022	0.022
	03/16/15	200.7/200.8	0.0031	0.34	<0.002	<0.006	<0.006	**3.5**	0.006	**3.1**	0.0058	<0.005	<0.2	0.029	0.014

8.17.2 MKTF WELLS

Total Metals Analytical Result Summary

STANDARDS			PARAMETERS												
			Arsenic (mg/L)	Barium (mg/L)	Cadmium (mg/L)	Chromium (mg/L)	Copper (mg/L)	Iron (mg/L)	Lead (mg/L)	Manganese (mg/L)	Selenium (mg/L)	Silver (mg/L)	Mercury (ug/L)	Uranium (mg/L)	Zinc (mg/L)
WQCC 20 NMAC 6.2.3103 (DEC 2018)			**0.01**	**2**	**0.005**	**0.05**	**1**	**1**	**0.015**	**0.2**	**0.05**	**0.05**	**2**	**0.03**	**10**
40 CFR 141.62 MCL			0.01	2	0.005	0.1	1.3	NE	0.015	NE	0.05	NE	2	0.03	NE
NMED Tap Water (JUNE 2019)			0.000855	3.28	0.00624	0.0057	0.7898	13.8	NE	2.02	0.0987	0.0812	0.626	0.0592	5.96
EPA RSL for Tap Water (NOVEMBER 2019)			0.000052	3.8	0.0092	NE	0.8	14	0.015	0.43	0.1	0.094	0.63	0.004	6
WELL ID	**DATE SAMPLED**	**METHOD**													
MKTF-39	11/05/19	200.7/200.8	0.0021	**52**	<0.002	<0.006	0.013	**32**	0.013	**6.7**	0.0041	0.01	0.085	0.0043	0.025
	08/20/19	200.7/200.8	<0.005	**48**	<0.002	<0.006	0.0052	**28**	0.0061	**9.5**	0.0029	0.012	0.074	0.00091	0.0093
	06/05/19	200.7/200.8	<0.005	**11**	<0.002	<0.006	0.0057	**27**	0.0037	**10**	<0.005	0.0097	<0.2	0.00084	0.0079
	03/28/19	--	Located within barricaded area - not accessible to collect samples												
	11/20/18	200.7/200.8	0.0021	**13**	<0.002	<0.006	0.0057	**12**	0.0044	**2.6**	<0.001	0.0052	<0.2	NA	0.011
	08/21/18	200.7/200.8	0.0029	**11**	<0.002	<0.006	0.0048	**12**	0.0033	**2.2**	*<0.05**	0.0043	0.067	0.00055	0.0065
	05/06/18	200.7/200.8	0.0022	**6.6**	<0.002	<0.006	0.006	**8.1**	0.004	**1.4**	<0.005	<0.005	0.052	<0.0025	0.012
	02/08/18	200.7/200.8	0.0027	**26**	<0.002	<0.006	<0.006	**24**	0.0047	**4.2**	0.011	0.0066	0.074	0.00035	0.0034
	11/28/17	200.7/200.8	0.0072	**13**	<0.002	<0.006	0.0066	**13**	0.0039	**1.9**	0.0061	0.0019	NA	<0.0025	0.0064
	09/28/17	200.7/200.8	0.0046	**35**	<0.002	<0.006	0.0021	**34**	0.0026	**5.5**	0.016	<0.005	<0.2	NA	0.0065
	06/08/17	200.7/200.8	0.0042	**6.7**	<0.002	0.0043	0.0085	**12**	0.011	**1.4**	0.0098	<0.005	0.1	0.00067	0.02
	03/14/17	200.7/200.8	0.0058	**6.4**	<0.002	0.004	0.0089	**11**	0.012	**1.4**	*<0.05**	<0.005	0.067	0.0011	0.022
	11/01/16	200.7/200.8	0.0037	**6.1**	<0.002	<0.006	<0.006	**8.7**	0.0046	**1.3**	0.0084	<0.005	<0.2	<0.0025	0.0093
	09/13/16	200.7/200.8	0.0047	**9.7**	<0.002	<0.006	<0.006	**12**	0.0074	**1.8**	0.012	<0.005	0.074	0.00048	0.014
	06/08/16	200.7/200.8	0.0024	**8.5**	<0.002	<0.006	<0.006	**12**	0.012	**1.8**	0.0069	<0.005	0.061	0.00092	0.028
	03/03/16	200.7/200.8	*<0.01**	**11**	<0.002	<0.006	<0.006	**13**	0.01	**1.9**	0.0071	<0.005	<0.2	0.00068	0.011
	11/09/15	200.7/200.8	0.0056	**33**	<0.002	0.0088	0.037	**45**	**0.049**	**5.2**	*<0.05**	<0.005	0.28	0.0038	0.076
	08/23/15	200.7/200.8	<0.005	**49**	<0.002	<0.006	0.019	**57**	**0.034**	**6.8**	<0.01	<0.005	0.27	0.0035	0.062
	06/10/15	200.7/200.8	<0.005	**58**	<0.002	<0.006	<0.06	**59**	**0.031**	**8**	<0.005	<0.005	<0.2	0.0029	0.042
	03/16/15	200.7/200.8	*<0.01**	**35**	*<0.01**	<0.03	<0.03	**50**	**0.034**	**8.6**	<0.01	<0.025	0.21	0.012	0.059

8.17.2 MKTF WELLS

Total Metals Analytical Result Summary

STANDARDS			PARAMETERS												
			Arsenic (mg/L)	Barium (mg/L)	Cadmium (mg/L)	Chromium (mg/L)	Copper (mg/L)	Iron (mg/L)	Lead (mg/L)	Manganese (mg/L)	Selenium (mg/L)	Silver (mg/L)	Mercury (ug/L)	Uranium (mg/L)	Zinc (mg/L)
WQCC 20 NMAC 6.2.3103 (DEC 2018)			**0.01**	**2**	**0.005**	**0.05**	**1**	**1**	**0.015**	**0.2**	**0.05**	**0.05**	**2**	**0.03**	**10**
40 CFR 141.62 MCL			0.01	2	0.005	0.1	1.3	NE	0.015	NE	0.05	NE	2	0.03	NE
NMED Tap Water (JUNE 2019)			0.000855	3.28	0.00624	0.0057	0.7898	13.8	NE	2.02	0.0987	0.0812	0.626	0.0592	5.96
EPA RSL for Tap Water (NOVEMBER 2019)			0.000052	3.8	0.0092	NE	0.8	14	0.015	0.43	0.1	0.094	0.63	0.004	6
WELL ID	**DATE SAMPLED**	**METHOD**													
MKTF-40	10/22/19	200.7/200.8	<0.005	0.11	<0.002	<0.006	<0.006	**2.3**	0.0023	0.056	<0.005	0.0051	<0.2	NA	0.0098
	08/22/19	200.7/200.8	0.0025	0.23	<0.002	0.0022	0.0076	**6.9**	0.0094	**0.25**	<0.005	0.004	0.16	**0.042**	0.024
	05/06/19	200.7/200.8	<0.005	0.12	<0.002	<0.006	<0.006	**3.7**	0.0037	0.063	<0.005	0.0068	<0.2	**0.046**	0.011
	02/20/19	200.7/200.8	0.0024	0.11	<0.002	<0.006	<0.006	**2.7**	0.0028	0.053	<0.005	0.0064	0.056	**0.042**	0.01
	11/15/18	200.7/200.8	0.0037	0.072	<0.002	<0.006	<0.006	**1.2**	0.0016	0.025	<0.001	0.0067	0.042	**0.046**	0.0055
	08/17/18	200.7/200.8	0.0034	0.11	<0.002	0.0022	0.0059	**3.5**	0.0031	0.1	<0.005	0.0073	0.079	**0.051**	0.011
	05/06/18	200.7/200.8	0.0055	0.18	<0.002	0.0026	0.0048	**5.1**	0.0059	**0.23**	<0.005	0.0044	0.054	**0.054**	0.17
	02/05/18	200.7/200.8	<0.005	0.17	<0.002	<0.006	0.006	**4.3**	0.0062	0.2	<0.01	0.011	0.087	**0.054**	0.016
	11/21/17	200.7/200.8	<0.005	0.16	<0.002	<0.006	0.0074	**4**	0.0042	0.18	<0.005	0.0047	<0.2	**0.053**	0.0085
	09/25/17	200.7/200.8	0.0022	0.14	<0.002	<0.006	<0.006	**2.5**	0.0028	**0.21**	0.0071	<0.005	<0.2	NA	0.0081
	06/05/17	200.7/200.8	0.0038	0.15	<0.002	0.0018	<0.006	**3.7**	0.0052	0.13	0.0089	<0.005	0.066	**0.063**	0.013
	03/07/17	200.7/200.8	0.0047	0.22	<0.002	<0.006	<0.006	**5.3**	0.0081	0.2	0.012	<0.005	<0.2	NA	0.018
	10/31/16	200.7/200.8	0.0041	0.21	<0.002	0.0028	<0.006	**5.3**	0.0084	**0.26**	0.0082	<0.005	0.055	**0.06**	0.019
	09/08/16	200.7/200.8	0.0045	0.31	<0.002	0.0053	0.0057	**10**	**0.029**	**0.49**	0.013	<0.005	0.12	**0.059**	0.043
	06/09/16	200.7/200.8	0.0031	0.32	<0.002	<0.006	<0.006	**5.5**	0.0087	**0.31**	0.0095	<0.005	0.096	**0.058**	0.022
	02/23/16	200.7/200.8	<0.005	0.14	<0.002	<0.006	<0.006	**2**	0.0026	0.17	0.0031	<0.005	0.068	**0.064**	0.0099
	11/04/15	200.7/200.8	<0.005	0.26	<0.002	<0.006	<0.006	**5.5**	0.0066	**0.32**	<0.02	<0.005	<0.2	**0.06**	0.024
	08/21/15	200.7/200.8	*<0.01**	0.19	<0.002	<0.006	<0.006	**3.4**	<0.005	**0.24**	<0.01	<0.005	<0.2	**0.081**	0.016
	06/10/15	200.7/200.8	<0.005	0.24	<0.002	<0.006	<0.006	**4**	0.0052	**0.21**	<0.01	<0.005	<0.2	**0.075**	0.021
	03/11/15	200.7/200.8	*<0.01**	0.28	<0.002	<0.006	<0.006	**5.6**	<0.01	**0.34**	0.015	<0.005	<0.2	**0.085**	0.023

8.17.2 MKTF WELLS

Total Metals Analytical Result Summary

STANDARDS			PARAMETERS												
			Arsenic (mg/L)	Barium (mg/L)	Cadmium (mg/L)	Chromium (mg/L)	Copper (mg/L)	Iron (mg/L)	Lead (mg/L)	Manganese (mg/L)	Selenium (mg/L)	Silver (mg/L)	Mercury (ug/L)	Uranium (mg/L)	Zinc (mg/L)
WQCC 20 NMAC 6.2.3103 (DEC 2018)			**0.01**	**2**	**0.005**	**0.05**	**1**	**1**	**0.015**	**0.2**	**0.05**	**0.05**	**2**	**0.03**	**10**
40 CFR 141.62 MCL			0.01	2	0.005	0.1	1.3	NE	0.015	NE	0.05	NE	2	0.03	NE
NMED Tap Water (JUNE 2019)			0.000855	3.28	0.00624	0.0057	0.7898	13.8	NE	2.02	0.0987	0.0812	0.626	0.0592	5.96
EPA RSL for Tap Water (NOVEMBER 2019)			0.000052	3.8	0.0092	NE	0.8	14	0.015	0.43	0.1	0.094	0.63	0.004	6
WELL ID	**DATE SAMPLED**	**METHOD**													
MKTF-41	10/23/19	200.7/200.8	0.0025	0.11	<0.002	<0.006	<0.006	**2.2**	<0.0005	0.067	0.039	<0.005	0.16	NA	0.0092
	08/22/19	200.7/200.8	0.0037	0.31	<0.002	0.0061	0.007	**7.3**	0.0081	**0.45**	0.034	<0.005	0.15	0.015	0.034
	05/07/19	200.7/200.8	0.0016	0.1	<0.002	<0.006	<0.006	0.73	0.00076	0.028	0.031	0.0015	0.069	0.015	<0.01
	02/13/19	200.7/200.8	0.0021	0.068	<0.002	<0.006	<0.006	0.16	0.0002	0.014	0.036	<0.005	0.08	0.011	<0.01
	11/15/18	200.7/200.8	0.0022	0.062	<0.002	<0.006	<0.006	0.055	<0.0005	0.0049	0.035	<0.005	0.051	0.01	0.0035
	08/29/18	200.7/200.8	0.0024	0.11	<0.002	0.0024	0.0064	**3.1**	0.002	0.078	0.035	<0.005	0.084	0.014	0.014
	05/09/18	200.7/200.8	0.0026	0.085	<0.002	<0.006	<0.006	**1.1**	0.001	0.048	0.039	<0.005	0.057	0.014	0.0044
	02/07/18	200.7/200.8	0.0056	0.11	<0.002	0.0021	<0.006	**2.4**	0.0026	0.084	0.038	<0.005	0.085	0.016	0.012
	11/27/17	200.7/200.8	*<0.01**	0.088	<0.002	<0.006	<0.006	**1.3**	0.0016	0.05	0.037	<0.005	<0.2	0.015	<0.01
	09/25/17	200.7/200.8	0.0053	0.092	<0.002	0.0022	<0.006	0.99	0.001	0.031	0.044	<0.005	0.074	NA	<0.01
	06/06/17	200.7/200.8	0.0063	0.14	<0.002	0.0038	0.004	**4.6**	0.0048	0.16	0.044	<0.005	0.049	0.02	0.015
	03/07/17	200.7/200.8	0.0081	0.12	<0.002	<0.006	<0.006	**2.1**	0.0032	0.1	0.047	<0.005	<0.2	NA	0.0084
	10/31/16	200.7/200.8	0.0064	0.094	<0.002	<0.006	<0.006	**1.8**	0.0029	0.088	0.045	<0.005	<0.2	0.017	0.011
	09/09/16	200.7/200.8	0.0061	0.12	<0.002	0.003	0.0031	**2.5**	0.0037	0.12	0.045	<0.005	<0.2	0.015	0.018
	06/09/16	200.7/200.8	0.0067	0.25	<0.002	0.0043	<0.006	**7.3**	0.01	**0.3**	0.046	<0.005	0.094	0.021	0.029
	02/24/16	200.7/200.8	0.0049	0.12	<0.002	0.0027	<0.006	**2.4**	0.0035	0.12	0.044	<0.005	<0.2	0.022	0.013
	11/05/15	200.7/200.8	*<0.01**	0.17	<0.002	<0.006	<0.006	**4.3**	0.0056	0.17	**0.052**	<0.005	<0.2	0.025	0.019
	08/21/15	200.7/200.8	*<0.01**	0.27	<0.002	0.0063	<0.006	**9**	0.012	**0.35**	0.044	<0.005	<0.2	0.029	0.034
	06/09/15	200.7/200.8	<0.005	0.16	*<0.006**	<0.006	<0.006	**4.1**	0.006	0.15	0.047	<0.005	<0.2	**0.031**	0.016
	03/12/15	200.7/200.8	*<0.01**	0.19	<0.002	0.0075	<0.006	**8.4**	0.0061	**0.22**	**0.059**	<0.005	<0.2	**0.034**	0.024

8.17.2 MKTF WELLS

Total Metals Analytical Result Summary

STANDARDS			PARAMETERS												
			Arsenic (mg/L)	Barium (mg/L)	Cadmium (mg/L)	Chromium (mg/L)	Copper (mg/L)	Iron (mg/L)	Lead (mg/L)	Manganese (mg/L)	Selenium (mg/L)	Silver (mg/L)	Mercury (ug/L)	Uranium (mg/L)	Zinc (mg/L)
WQCC 20 NMAC 6.2.3103 (DEC 2018)			**0.01**	**2**	**0.005**	**0.05**	**1**	**1**	**0.015**	**0.2**	**0.05**	**0.05**	**2**	**0.03**	**10**
40 CFR 141.62 MCL			0.01	2	0.005	0.1	1.3	NE	0.015	NE	0.05	NE	2	0.03	NE
NMED Tap Water (JUNE 2019)			0.000855	3.28	0.00624	0.0057	0.7898	13.8	NE	2.02	0.0987	0.0812	0.626	0.0592	5.96
EPA RSL for Tap Water (NOVEMBER 2019)			0.000052	3.8	0.0092	NE	0.8	14	0.015	0.43	0.1	0.094	0.63	0.004	6
WELL ID	**DATE SAMPLED**	**METHOD**													
MKTF-42	10/23/19	200.7/200.8	<0.005	0.062	<0.002	<0.006	<0.006	0.19	<0.0025	0.11	<0.005	<0.005	0.2	NA	<0.01
	08/22/19	200.7/200.8	0.0015	0.059	<0.002	<0.006	<0.006	0.16	0.00028	0.11	0.00087	<0.005	0.11	0.01	<0.01
	05/07/19	200.7/200.8	0.007	0.065	<0.002	<0.006	<0.006	0.15	0.00037	0.12	<0.005	<0.005	0.046	0.012	<0.01
	02/13/19	200.7/200.8	0.0015	0.067	<0.002	<0.006	<0.006	0.17	0.00037	0.055	0.0011	<0.005	*<2**	0.016	<0.01
	11/15/18	200.7/200.8	0.0023	0.035	<0.002	<0.006	<0.006	0.039	<0.0005	0.051	0.0015	<0.005	0.045	0.0092	<0.01
	08/29/18	200.7/200.8	0.0019	0.074	<0.002	<0.006	0.0041	0.47	0.00057	0.15	<0.001	<0.005	0.074	0.01	0.006
	05/09/18	200.7/200.8	0.002	0.08	<0.002	<0.006	0.0067	0.75	0.0011	0.15	0.0012	<0.005	0.067	0.012	0.0085
	02/07/18	200.7/200.8	<0.005	0.08	<0.002	<0.006	0.0046	0.75	0.002	**0.22**	<0.01	<0.005	0.073	0.0095	0.0079
	11/27/17	200.7/200.8	0.0025	0.071	<0.002	<0.006	<0.006	0.44	<0.0025	**0.21**	<0.005	<0.005	<0.2	0.011	<0.01
	09/25/17	200.7/200.8	0.0032	0.061	<0.002	<0.006	<0.006	0.22	0.00023	0.2	0.0068	<0.012	0.048	NA	<0.01
	06/06/17	200.7/200.8	0.0029	0.082	<0.002	<0.006	0.0044	0.92	0.0014	**0.25**	0.0054	<0.005	0.057	0.012	0.0029
	03/07/17	200.7/200.8	0.0089	0.11	<0.002	<0.006	0.005	**1.2**	0.0023	**0.26**	0.012	<0.005	<0.2	NA	0.006
	10/31/16	200.7/200.8	0.0047	0.11	<0.002	<0.006	0.0052	**1.3**	0.0028	**0.31**	0.0095	<0.005	<0.2	0.014	0.0078
	09/09/16	200.7/200.8	0.0042	0.11	<0.002	<0.006	0.0054	0.8	0.0018	**0.32**	0.011	<0.005	<0.2	0.017	0.0074
	06/09/16	200.7/200.8	0.0038	0.12	<0.002	<0.006	<0.006	**1.6**	0.0032	**0.43**	0.0086	<0.005	0.097	0.021	0.013
	02/24/16	200.7/200.8	0.0026	0.092	<0.002	<0.006	0.01	0.89	0.0015	**0.41**	0.0035	<0.005	<0.2	0.023	0.0061
	11/05/15	200.7/200.8	*<0.01**	0.076	<0.002	<0.006	<0.006	0.49	0.00077	**0.39**	0.011	<0.005	<0.2	0.027	<0.01
	08/21/15	200.7/200.8	<0.005	0.097	<0.002	<0.006	<0.006	0.75	0.0012	**0.36**	0.0045	<0.005	<0.2	**0.032**	0.014
	06/09/15	200.7/200.8	<0.005	0.13	<0.002	<0.006	0.011	**1.6**	<0.0025	**0.6**	<0.005	<0.005	<0.2	**0.036**	0.016
	03/11/15	200.7/200.8	0.0035	0.16	<0.002	<0.006	0.0071	**2.5**	0.0034	**0.58**	0.0075	<0.005	<0.2	**0.039**	0.012

8.17.2 MKTF WELLS

Total Metals Analytical Result Summary

STANDARDS			PARAMETERS												
			Arsenic (mg/L)	Barium (mg/L)	Cadmium (mg/L)	Chromium (mg/L)	Copper (mg/L)	Iron (mg/L)	Lead (mg/L)	Manganese (mg/L)	Selenium (mg/L)	Silver (mg/L)	Mercury (ug/L)	Uranium (mg/L)	Zinc (mg/L)
WQCC 20 NMAC 6.2.3103 (DEC 2018)			**0.01**	**2**	**0.005**	**0.05**	**1**	**1**	**0.015**	**0.2**	**0.05**	**0.05**	**2**	**0.03**	**10**
40 CFR 141.62 MCL			0.01	2	0.005	0.1	1.3	NE	0.015	NE	0.05	NE	2	0.03	NE
NMED Tap Water (JUNE 2019)			0.000855	3.28	0.00624	0.0057	0.7898	13.8	NE	2.02	0.0987	0.0812	0.626	0.0592	5.96
EPA RSL for Tap Water (NOVEMBER 2019)			0.000052	3.8	0.0092	NE	0.8	14	0.015	0.43	0.1	0.094	0.63	0.004	6
WELL ID	**DATE SAMPLED**	**METHOD**													
MKTF-43	10/24/19	200.7/200.8	0.0023	0.14	<0.002	<0.006	<0.006	**3**	0.0028	**1.1**	0.0025	0.014	0.047	**0.032**	0.0088
	08/22/19	200.7/200.8	<0.005	0.12	<0.002	<0.006	0.0079	**3.3**	0.0032	**1.1**	<0.005	0.0089	0.078	**0.049**	0.0079
	05/08/19	200.7/200.8	0.0012	0.12	<0.002	<0.006	0.0046	**1.4**	0.0013	**0.71**	0.00098	0.01	<0.2	**0.034**	<0.01
	02/13/19	200.7/200.8	0.0039	0.12	<0.002	<0.006	<0.006	**1.7**	0.0017	**1.1**	<0.005	0.016	0.091	**0.057**	0.0077
	11/15/18	200.7/200.8	0.005	0.091	<0.002	<0.006	0.011	0.95	0.00094	**0.22**	0.0011	0.011	0.047	**0.032**	0.0039
	08/30/18	200.7/200.8	0.0058	0.16	<0.002	<0.006	<0.006	0.25	<0.0025	**0.43**	<0.005	0.012	0.051	0.021	0.0066
	05/09/18	200.7/200.8	0.0057	0.19	<0.002	<0.006	0.011	**6**	0.0091	**3.2**	0.034	0.02	0.061	**0.12**	0.017
	02/07/18	200.7/200.8	0.0058	0.17	<0.002	<0.006	0.012	**4.7**	0.005	**4.9**	0.023	0.029	0.091	**0.14**	0.018
	11/27/17	200.7/200.8	*<0.01**	0.13	<0.002	<0.006	0.011	**2.4**	0.0026	**6.8**	*<0.05**	0.022	<0.2	**0.13**	<0.01
	09/25/17	200.7/200.8	**0.016**	0.1	<0.002	<0.006	<0.006	**1.4**	0.0015	**8.4**	0.045	<0.005	<0.2	NA	<0.01
	06/06/17	200.7/200.8	**0.013**	0.16	<0.002	<0.006	<0.006	**4.1**	0.0048	**7.1**	0.043	<0.005	<0.2	**0.16**	0.014
	03/08/17	200.7/200.8	**0.033**	0.12	*<0.01**	<0.03	<0.03	**2.6**	*<0.025**	**11**	**0.082**	<0.005	<0.2	NA	0.016
	10/31/16	200.7/200.8	**0.03**	0.18	<0.002	<0.006	<0.006	**2.2**	*<0.025**	**18**	**0.084**	<0.005	<0.2	**0.19**	0.032
	09/09/16	200.7/200.8	**0.022**	0.17	<0.002	<0.006	<0.006	**3.6**	0.0041	**21**	**0.065**	<0.005	<0.2	**0.21**	0.032
	06/09/16	200.7/200.8	*<0.1**	0.24	<0.002	<0.006	<0.006	**7.9**	0.0098	**19**	*<0.1**	<0.005	0.13	**0.26**	0.027
	02/24/16	200.7/200.8	*<0.05**	0.13	*<0.01**	<0.03	<0.03	**2.4**	0.0038	**12**	0.03	<0.005	<0.2	**0.22**	0.022
	11/05/15	200.7/200.8	*<0.05**	0.19	<0.002	<0.006	<0.006	**4.8**	<0.01	**16**	*<0.5**	<0.005	<0.2	**0.25**	0.021
	08/21/15	200./200.8	*<0.02**	0.31	*<0.01**	<0.03	<0.03	**6.6**	<0.01	**23**	**0.06**	<0.025	<0.2	**0.28**	0.056
	06/10/15	200.7/200.8	*<0.1**	0.2	<0.002	<0.006	<0.006	**4.8**	<0.01	**14**	*<0.1**	<0.005	<0.2	**0.25**	0.024
	03/11/15	200.7/200.8	*<0.05**	0.24	*<0.01**	0.031	<0.03	**3.2**	*<0.02**	**3.7**	**0.071**	<0.005	<0.2	**0.14**	<0.05

8.17.2 MKTF WELLS

Total Metals Analytical Result Summary

STANDARDS			PARAMETERS												
			Arsenic (mg/L)	Barium (mg/L)	Cadmium (mg/L)	Chromium (mg/L)	Copper (mg/L)	Iron (mg/L)	Lead (mg/L)	Manganese (mg/L)	Selenium (mg/L)	Silver (mg/L)	Mercury (ug/L)	Uranium (mg/L)	Zinc (mg/L)
WQCC 20 NMAC 6.2.3103 (DEC 2018)			**0.01**	**2**	**0.005**	**0.05**	**1**	**1**	**0.015**	**0.2**	**0.05**	**0.05**	**2**	**0.03**	**10**
40 CFR 141.62 MCL			0.01	2	0.005	0.1	1.3	NE	0.015	NE	0.05	NE	2	0.03	NE
NMED Tap Water (JUNE 2019)			0.000855	3.28	0.00624	0.0057	0.7898	13.8	NE	2.02	0.0987	0.0812	0.626	0.0592	5.96
EPA RSL for Tap Water (NOVEMBER 2019)			0.000052	3.8	0.0092	NE	0.8	14	0.015	0.43	0.1	0.094	0.63	0.004	6
WELL ID	**DATE SAMPLED**	**METHOD**													
MKTF-44	10/24/19	200.7/200.8	0.0059	0.19	<0.002	0.0069	<0.006	**4**	0.0038	0.11	0.011	<0.005	0.15	NA	0.017
	08/22/19	200.7/200.8	0.005	0.27	<0.002	0.012	0.0048	**3.9**	0.0049	0.083	0.0095	<0.005	0.1	**0.12**	0.017
	05/08/19	200.7/200.8	0.0031	0.5	<0.002	0.016	0.0049	0.82	0.00097	0.024	0.0089	0.0017	<0.2	**0.11**	0.0059
	02/13/19	200.7/200.8	0.005	0.3	<0.002	0.018	<0.006	**6.7**	0.0074	0.14	0.009	0.0021	0.061	**0.12**	0.026
	11/15/18	200.7/200.8	0.0077	0.12	<0.002	0.01	0.0066	**7.8**	0.0075	**0.23**	0.0096	<0.005	0.058	**0.18**	0.036
	08/30/18	200.7/200.8	0.0048	0.071	<0.002	0.0046	<0.006	0.89	0.00081	0.016	0.01	<0.005	0.039	**0.16**	0.0052
	05/10/18	200.7/200.8	0.0083	0.084	<0.002	0.0064	<0.006	**5.5**	0.0041	0.062	0.012	<0.005	0.071	**0.19**	0.013
	02/08/18	200.7/200.8	0.0095	0.096	<0.002	0.0088	<0.006	**4.7**	0.0056	0.092	0.011	<0.005	0.079	**0.18**	0.02
	11/28/17	200.7/200.8	*<0.05**	0.13	<0.002	0.0098	0.0052	**6.5**	0.0054	0.092	0.0089	<0.005	NA	**0.15**	0.02
	09/25/17	200.7/200.8	0.0033	0.16	<0.002	0.013	<0.006	<0.02	<0.0005	0.00064	0.012	<0.005	<0.2	NA	0.011
	06/05/17	200.7/200.8	0.0039	0.21	<0.002	0.016	0.0031	**4.1**	0.0052	0.14	0.011	<0.005	0.058	**0.13**	0.014
	03/08/17	200.7/200.8	**0.012**	0.97	<0.002	0.038	<0.006	**3.1**	0.0042	0.08	0.025	<0.005	<0.2	NA	0.013
	11/01/16	200.7/200.8	**0.011**	0.2	<0.002	0.022	0.015	**18**	**0.024**	**0.38**	0.013	<0.005	0.083	**0.18**	0.074
	09/09/16	200.7/200.8	0.0086	0.26	<0.002	0.031	0.019	**33**	**0.031**	**0.53**	0.014	<0.005	0.1	**0.17**	0.089
	06/09/16	200.7/200.8	0.0045	0.25	<0.002	0.016	<0.006	**7.1**	0.0092	**0.28**	0.013	<0.005	0.089	**0.17**	0.03
	02/24/16	200.7/200.8	0.0061	0.1	<0.002	0.0098	<0.006	**2.9**	0.0037	0.056	0.016	<0.005	<0.2	**0.18**	0.013
	11/09/15	200.7/200.8	0.0078	0.15	<0.002	0.012	0.008	**9.9**	0.013	**0.29**	<0.01	<0.005	<0.2	**0.2**	0.037
	08/17/15	200.7/200.8	*<0.01**	0.43	<0.002	0.031	0.016	**26**	**0.034**	**0.92**	0.015	<0.005	<0.2	**0.24**	0.1
	06/10/15	200.7/200.8	*<0.01**	0.18	<0.002	0.017	<0.006	**11**	0.014	**0.26**	0.014	<0.005	<0.2	**0.21**	0.052
	03/12/15	200.7/200.8	*<0.01**	0.22	<0.002	0.023	0.0079	**16**	**0.016**	**0.34**	0.015	<0.005	<0.2	**0.22**	0.056
MKTF-45			SPH Detected - No samples were collected.												
MKTF-46	12/03/19	200.7/200.8	0.00073	0.091	<0.002	<0.006	NA	0.52	0.00079	**0.48**	0.0011	<0.005	<0.2	NA	0.0071
MKTF-47	12/03/19	200.7/200.8	0.0011	0.19	<0.002	0.017	NA	**2.4**	0.0014	0.11	0.0044	<0.005	<0.2	NA	0.01
MKTF-48	12/03/19	200.7/200.8	0.0018	0.95	<0.002	0.0014	NA	0.22	0.00068	**1.1**	<0.001	<0.005	<0.2	NA	0.0087
MKTF-49	12/03/19	200.7/200.8	0.0028	**6**	<0.002	0.003	NA	**17**	0.0091	**7.6**	<0.005	<0.005	<0.2	NA	0.014
MKTF-50	12/03/19	200.7/200.8	0.0091	**2.1**	<0.002	<0.006	NA	**4.5**	0.00079	**1.3**	<0.001	<0.005	<0.2	NA	<0.01

DEFINITIONS

NE = Not established

NA = Not analyzed

Bold and highlighted values represent values above the applicable standards

STANDARDS

WQCC 20 NMAC 6.2.3103 - Standards for Ground Water of 10,000 mg/l TDS Concentration or Less.

a) Human Health Standards; b) Other Standards for Domestic Water

40 CFR 141.62 Maximum Contaminant Levels for Inorganic Contaminants

NMED Risk Assessment Guidance for Investigations and Remediations Table A-1

EPA Regional Screening Level (RSL) Summary Table

NOTES

Wells marked in red were not sampled because of SPH, well was dry, or well was inaccessible.

Items notes with a * and italics have a detection limit greater than or equal to the applicable standard.

8.17.3 MKTF WELLS

Dissolved Metals Analytical Result Summary

			PARAMETERS											
STANDARDS			Arsenic (mg/L)	Barium (mg/L)	Cadmium (mg/L)	Chromium (mg/L)	Copper (mg/L)	Iron (mg/L)	Lead (mg/L)	Manganese (mg/L)	Silver (mg/L)	Selenium (mg/L)	Uranium (mg/L)	Zinc (mg/L)
WQCC 20 NMAC 6.2.3103 (DEC 2018)			**0.01**	**2**	**0.005**	**0.05**	**1**	**1**	**0.015**	**0.2**	**0.05**	**0.05**	**0.03**	**10**
40 CFR 141.62 MCL			0.01	2	0.005	0.1	1.3	NE	0.015	NE	NE	0.05	0.03	NE
NMED Tap Water (JUNE 2019)			0.000855	3.28	0.00624	0.0057	0.7898	13.8	NE	2.02	0.0812	0.0987	0.0592	5.96
EPA RSL for Tap Water (NOVEMBER 2019)			0.000052	3.8	0.0092	NE	0.8	14	0.015	0.43	0.094	0.1	0.004	6
WELL ID	DATE SAMPLED	METHOD												
MKTF-1	Second half 2016-2019	--	SPH Detected - No samples were collected.											
	02/24/16	200.7/200.8	0.0018	**3.2**	<0.002	<0.006	<0.006	**5.2**	<0.0025	**2.1**	<0.005	0.0046	0.00017	0.077
	11/04/15	200.7/200.8	<0.005	**2.7**	<0.002	<0.006	<0.006	**4.7**	<0.0005	**1.9**	<0.005	0.0072	<0.0005	<0.01
	08/21/15	200.7/200.8	<0.005	**2.4**	<0.002	<0.006	<0.006	**4**	<0.0025	**1.9**	<0.005	<0.005	<0.025	<0.01
	06/09/15	200.7/200.8	<0.005	**2.3**	<0.002	<0.006	<0.006	**4.7**	<0.005	**2.1**	<0.005	0.0056	<0.005	<0.01
	03/11/15	200.7/200.8	*<0.01**	2	<0.002	<0.006	<0.006	**4.4**	<0.001	**1.9**	<0.005	<0.02	<0.001	<0.01
	06/06/14	200.7/200.8	<0.005	1.4	<0.002	<0.006	<0.006	**4.7**	<0.005	**1.7**	<0.005	0.013	<0.01	0.028
MKTF-2	11/19/19	200.7/200.8	0.0026	0.17	<0.002	<0.006	0.002	0.48	<0.0025	**2.5**	0.0062	<0.005	**0.046**	0.026
	08/23/19	200.7/200.8	0.0038	0.73	<0.002	<0.006	0.0026	**2.4**	0.00039	**2**	0.0034	0.00066	**0.032**	0.0065
	05/06/19	200.7/200.8	0.0033	0.9	<0.002	<0.006	<0.006	**3**	<0.0025	**1.8**	0.0045	<0.005	0.017	0.057
	03/28/19	200.7/200.8	0.0018	0.99	<0.002	<0.006	<0.006	0.42	0.00007	**1.6**	0.0026	0.0005	0.023	0.025
	11/28/18	200.7/200.8	<0.005	0.43	<0.002	<0.006	<0.006	0.078	<0.0005	**0.75**	<0.005	<0.005	NA	0.025
	08/20/18	200.7/200.8	0.0025	0.27	<0.002	<0.006	<0.006	0.027	0.00024	**0.51**	0.0022	<0.001	**0.039**	0.0071
	05/01/18	200.7/200.8	0.0021	0.26	<0.002	<0.006	<0.006	0.03	0.00028	**0.57**	<0.005	<0.005	0.024	0.0051
	02/06/18	200.7/200.8	0.0037	0.28	<0.002	<0.006	<0.006	0.022	0.00052	**0.55**	0.0025	<0.005	0.03	0.007
	11/20/17	200.7/200.8	0.0028	0.28	<0.002	<0.006	<0.006	0.03	0.00035	**0.56**	<0.005	<0.005	**0.036**	0.0037
	10/03/17	200.7/200.8	0.0058	0.33	<0.002	<0.006	<0.006	**1.5**	0.00018	**0.92**	<0.005	0.0081	NA	0.034
	03/16/17	200.7/200.8	0.0016	0.31	<0.002	<0.006	<0.006	0.089	0.00025	**0.67**	<0.005	0.0029	0.024	0.015
	10/28/16	200.7/200.8	0.003	0.19	<0.002	<0.006	<0.006	0.036	0.00059	**0.47**	<0.005	0.0064	0.024	<0.01
	09/07/16	200.7/200.8	0.0029	0.16	<0.002	<0.006	<0.006	0.045	0.0015	**0.39**	<0.005	0.0061	**0.035**	0.0035
	06/10/16	200.7/200.8	0.0028	0.13	<0.002	<0.006	<0.006	0.081	0.00049	**0.33**	<0.005	0.0061	**0.033**	0.0033
	02/24/16	200.7/200.8	0.0027	0.095	<0.002	<0.006	<0.006	0.55	0.002	**0.39**	<0.005	0.0033	**0.059**	0.074
	11/04/15	200.7/200.8	0.0049	0.14	<0.002	<0.006	<0.006	0.25	0.00065	**0.44**	<0.005	<0.005	0.03	<0.01
	08/21/15	200.7/200.8	0.0043	0.13	<0.002	<0.006	<0.006	0.76	<0.0005	**0.6**	<0.005	0.0032	**0.048**	<0.01
	06/09/15	200.7/200.8	<0.005	0.12	<0.002	<0.006	<0.006	0.21	<0.005	**0.56**	<0.005	<0.005	**0.032**	<0.01
	03/11/15	200.7/200.8	0.0047	0.13	<0.002	<0.006	<0.006	0.11	<0.001	**0.56**	<0.005	0.0084	**0.049**	<0.01
	11/14/14	200.7/200.8	*<0.01**	0.13	<0.002	<0.006	<0.006	**2.2**	<0.01	**0.51**	<0.005	<0.01	**0.059**	0.027
	09/18/14	200.7/200.8	<0.005	0.15	<0.002	<0.006	<0.006	0.029	<0.001	**0.59**	<0.005	<0.005	0.012	0.041
	06/06/14	200.7/200.8	<0.005	0.13	<0.002	<0.006	<0.006	0.34	<0.005	**0.56**	<0.005	0.012	**0.056**	0.01
MKTF-3			SPH Detected - No samples were collected.											

8.17.3 MKTF WELLS

Dissolved Metals Analytical Result Summary

			PARAMETERS											
STANDARDS			Arsenic (mg/L)	Barium (mg/L)	Cadmium (mg/L)	Chromium (mg/L)	Copper (mg/L)	Iron (mg/L)	Lead (mg/L)	Manganese (mg/L)	Silver (mg/L)	Selenium (mg/L)	Uranium (mg/L)	Zinc (mg/L)
WQCC 20 NMAC 6.2.3103 (DEC 2018)			**0.01**	**2**	**0.005**	**0.05**	**1**	**1**	**0.015**	**0.2**	**0.05**	**0.05**	**0.03**	**10**
40 CFR 141.62 MCL			0.01	2	0.005	0.1	1.3	NE	0.015	NE	NE	0.05	0.03	NE
NMED Tap Water (JUNE 2019)			0.000855	3.28	0.00624	0.0057	0.7898	13.8	NE	2.02	0.0812	0.0987	0.0592	5.96
EPA RSL for Tap Water (NOVEMBER 2019)			0.000052	3.8	0.0092	NE	0.8	14	0.015	0.43	0.094	0.1	0.004	6
WELL ID	DATE SAMPLED	METHOD												
MKTF-4	10/30/19	200.7/200.8	0.0098	**3.4**	<0.002	<0.006	0.0016	**5.4**	0.000072	**1.5**	0.0025	0.00035	NA	0.047
	08/21/19	200.7/200.8	0.0072	1.8	<0.002	<0.006	0.0031	**1.5**	0.000072	**2**	0.0016	0.006	0.0075	0.0046
	05/13/19	200.7/200.8	0.0081	**3.3**	<0.002	<0.006	<0.006	**4.5**	<0.0025	**1.6**	0.0021	<0.005	0.0018	0.015
	03/26/19	200.7/200.8	0.0072	**3.3**	<0.002	<0.006	<0.006	**1.8**	0.000093	**1.6**	0.0022	0.00033	0.0022	0.021
	11/20/18	200.7/200.8	0.0075	**2.6**	<0.002	<0.006	<0.006	1	<0.0005	**1.5**	0.0023	<0.001	NA	0.029
	09/04/18	200.7/200.8	**0.011**	**3.1**	<0.002	<0.006	<0.006	**3.2**	<0.0005	**1.5**	0.0031	<0.001	0.0032	0.012
	05/02/18	200.7/200.8	0.01	**2.6**	<0.002	<0.006	<0.006	**2.4**	<0.0005	**1.5**	<0.005	<0.001	0.0038	0.0068
	02/14/18	200.7/200.8	*<0.02**	**2.8**	<0.002	<0.006	<0.006	**1.9**	<0.0005	**1.5**	0.0024	<0.02	0.0044	0.0082
	11/28/17	200.7/200.8	0.0098	**3.1**	<0.002	<0.006	<0.006	**3.7**	<0.0025	**1.3**	<0.005	<0.01	0.0017	<0.01
	09/26/17	200.7/200.8	**0.17**	**3.7**	<0.002	<0.006	<0.006	**7.6**	<0.0005	**1.4**	<0.005	*<0.05**	NA	0.034
	06/08/17	200.7/200.8	0.0097	**2.9**	<0.002	<0.006	0.0055	0.81	<0.0005	**1.4**	<0.005	0.0091	0.0034	0.011
	03/02/17	200.7/200.8	**0.012**	**3**	<0.002	<0.006	<0.006	**4.8**	<0.0005	**1.4**	<0.005	0.01	NA	0.026
	11/02/16	200.7/200.8	0.01	**2.7**	<0.002	<0.006	<0.006	**1.7**	<0.0005	**1.4**	<0.005	0.011	0.0031	0.0057
	09/11/16	200.7/200.8	**0.011**	**2.6**	<0.002	<0.006	<0.006	**1.2**	0.00033	**1.4**	<0.005	0.014	0.0037	0.003
	06/09/16	200.7/200.8	0.008	**2.4**	<0.002	<0.006	<0.006	**2**	<0.0005	**1.4**	<0.005	0.0085	0.0048	<0.01
	02/29/16	200.7/200.8	0.0085	**2.8**	<0.002	<0.006	<0.006	**5.6**	0.000044	**1.5**	<0.005	0.0061	0.0053	0.022
	11/03/15	200.7/200.8	**0.012**	**3.1**	<0.002	<0.006	<0.006	**13**	<0.0005	**1.5**	<0.005	<0.02	0.0023	<0.01
	08/18/15	200.7/200.8	*<0.01**	**2.5**	<0.002	<0.006	<0.006	**8.7**	<0.0025	**1.6**	<0.005	<0.01	0.0034	<0.01
	06/04/15	200.7/200.8	*<0.01**	**2.2**	<0.002	<0.006	<0.006	**8.6**	<0.01	**1.6**	<0.005	<0.01	<0.01	0.023
	03/16/15	200.7/200.8	0.0097	1.1	<0.002	<0.006	<0.006	**2**	<0.005	**1.9**	<0.005	*<0.05**	0.013	0.021
	11/13/14	200.7/200.8	0.006	1.3	<0.002	<0.006	<0.006	**4.7**	<0.005	**1.8**	<0.005	<0.005	0.013	0.01
	09/15/14	200.7/200.8	*<0.01**	0.78	<0.002	<0.006	<0.006	**3.6**	0.0013	**1.7**	<0.005	<0.01	0.018	<0.01
	06/04/14	200.7/200.8	0.0078	1.9	<0.002	<0.006	<0.006	**2.5**	<0.005	**1.4**	<0.005	0.022	<0.01	<0.01
MKTF-5			SPH Detected - No samples were collected.											
MKTF-6			SPH Detected - No samples were collected.											
MKTF-7			SPH Detected - No samples were collected.											
MKTF-8			SPH Detected - No samples were collected.											

8.17.3 MKTF WELLS

Dissolved Metals Analytical Result Summary

			PARAMETERS											
STANDARDS			Arsenic (mg/L)	Barium (mg/L)	Cadmium (mg/L)	Chromium (mg/L)	Copper (mg/L)	Iron (mg/L)	Lead (mg/L)	Manganese (mg/L)	Silver (mg/L)	Selenium (mg/L)	Uranium (mg/L)	Zinc (mg/L)
WQCC 20 NMAC 6.2.3103 (DEC 2018)			**0.01**	**2**	**0.005**	**0.05**	**1**	**1**	**0.015**	**0.2**	**0.05**	**0.05**	**0.03**	**10**
40 CFR 141.62 MCL			0.01	2	0.005	0.1	1.3	NE	0.015	NE	NE	0.05	0.03	NE
NMED Tap Water (JUNE 2019)			0.000855	3.28	0.00624	0.0057	0.7898	13.8	NE	2.02	0.0812	0.0987	0.0592	5.96
EPA RSL for Tap Water (NOVEMBER 2019)			0.000052	3.8	0.0092	NE	0.8	14	0.015	0.43	0.094	0.1	0.004	6
WELL ID	DATE SAMPLED	METHOD												
MKTF-9	11/18/19	200.7/200.8	0.0029	0.67	<0.002	<0.006	<0.006	**2.4**	0.000064	**4.2**	0.0026	0.00028	0.0063	0.02
	08/28/19	200.7/200.8	0.0008	0.51	<0.002	<0.006	0.002	**3.8**	0.0001	**4.4**	0.002	0.00025	0.0013	0.0085
	05/13/19	200.7/200.8	0.0025	0.69	<0.002	<0.006	0.0037	**3.2**	<0.0025	**4.6**	0.0025	<0.005	0.0017	0.059
	03/26/19	200.7/200.8	0.0025	0.71	<0.002	<0.006	<0.006	**3.9**	<0.0005	**4.6**	0.0014	0.00041	0.0025	0.02
	11/28/18	200.7/200.8	0.0016	0.49	<0.002	<0.006	<0.006	0.82	<0.0005	**4.1**	0.0029	<0.001	NA	0.022
	09/04/18	200.7/200.8	0.0019	0.54	<0.002	<0.006	<0.006	0.94	<0.0005	**4.4**	0.0041	<0.001	0.0038	0.0083
	05/02/18	200.7/200.8	0.0021	0.46	<0.002	<0.006	<0.006	**1.4**	<0.0005	**3.9**	<0.005	<0.001	0.0042	0.0085
	02/14/18	200.7/200.8	0.0025	0.52	<0.002	<0.006	<0.006	**1.3**	<0.0005	**4**	0.0035	0.0048	0.0054	0.008
	11/28/17	200.7/200.8	0.0023	0.61	<0.002	<0.006	<0.006	**1.5**	<0.0025	**3.9**	<0.005	<0.005	0.0046	<0.01
	09/28/17	200.7/200.8	0.0028	0.54	<0.002	<0.006	<0.006	**3**	<0.0005	**4.5**	<0.005	<0.02	NA	0.005
	06/12/17	200.7/200.8	0.0019	0.6	<0.002	<0.006	<0.006	**2.3**	0.00018	**4.6**	<0.005	0.0021	NA	0.015
	03/15/17	200.7/200.8	0.0035	0.57	<0.002	<0.006	<0.006	**2.1**	<0.0005	**4.1**	<0.005	0.0023	0.0033	0.051
	11/02/16	200.7/200.8	0.0028	0.4	<0.002	<0.006	<0.006	0.92	<0.0005	**3.2**	<0.005	0.0055	0.0065	0.27
	09/11/16	200.7/200.8	0.0032	0.52	<0.002	<0.006	<0.006	0.81	0.00023	**3.7**	<0.005	0.0075	0.005	<0.01
	06/09/16	200.7/200.8	0.0025	0.43	<0.002	<0.006	<0.006	**1.1**	<0.0005	**3.5**	<0.005	0.0053	0.0068	<0.01
	02/29/16	200.7/200.8	0.0022	0.55	<0.002	<0.006	<0.006	**2.8**	0.00021	**3.9**	<0.005	0.0031	0.0047	0.0087
	11/03/15	200.7/200.8	<0.005	0.5	<0.002	<0.006	<0.006	**3.2**	<0.0005	**4.2**	<0.005	<0.01	0.0036	<0.01
	08/18/15	200.7/200.8	*<0.01**	0.45	<0.002	<0.006	<0.006	**2.4**	<0.0025	**4**	<0.005	<0.01	0.0039	<0.01
	06/04/15	200.7/200.8	*<0.01**	0.31	<0.002	<0.006	<0.006	**1.9**	<0.01	**3.2**	<0.005	<0.01	<0.01	0.012
	03/16/15	200.7/200.8	<0.005	0.19	<0.002	<0.006	<0.006	**1.4**	<0.001	**2.3**	<0.005	<0.01	0.012	0.039
	11/14/14	200.7/200.8	*<0.01**	0.34	<0.002	<0.006	<0.006	**2.4**	<0.01	**2.8**	<0.005	<0.01	<0.01	0.017
	09/18/14	200.7/200.8	*<0.01**	0.32	<0.002	<0.006	<0.006	**2.2**	<0.001	**2.6**	<0.005	<0.01	0.012	<0.01
	06/05/14	200.7/200.8	<0.005	0.44	<0.002	<0.006	<0.006	**3.4**	<0.005	**3.6**	<0.005	0.014	<0.01	<0.01

8.17.3 MKTF WELLS

Dissolved Metals Analytical Result Summary

			PARAMETERS											
STANDARDS			Arsenic (mg/L)	Barium (mg/L)	Cadmium (mg/L)	Chromium (mg/L)	Copper (mg/L)	Iron (mg/L)	Lead (mg/L)	Manganese (mg/L)	Silver (mg/L)	Selenium (mg/L)	Uranium (mg/L)	Zinc (mg/L)
WQCC 20 NMAC 6.2.3103 (DEC 2018)			**0.01**	**2**	**0.005**	**0.05**	**1**	**1**	**0.015**	**0.2**	**0.05**	**0.05**	**0.03**	**10**
40 CFR 141.62 MCL			0.01	2	0.005	0.1	1.3	NE	0.015	NE	NE	0.05	0.03	NE
NMED Tap Water (JUNE 2019)			0.000855	3.28	0.00624	0.0057	0.7898	13.8	NE	2.02	0.0812	0.0987	0.0592	5.96
EPA RSL for Tap Water (NOVEMBER 2019)			0.000052	3.8	0.0092	NE	0.8	14	0.015	0.43	0.094	0.1	0.004	6
WELL ID	DATE SAMPLED	METHOD												
MKTF-10	10/30/19	200.7/200.8	0.0092	**10**	<0.002	<0.006	<0.006	**14**	<0.0005	**6.2**	0.005	0.00044	NA	0.018
	08/22/19	200.7/200.8	0.0059	**8.5**	<0.002	<0.006	0.0023	**7.9**	0.000083	**5.4**	0.0032	<0.001	0.00063	0.0057
	05/13/19	200.7/200.8	0.0051	**4.6**	<0.002	<0.006	0.00026	**8.4**	<0.0025	**3.4**	0.0026	<0.005	<0.0025	0.13
	03/26/19	200.7/200.8	0.0037	**4.2**	<0.002	<0.006	<0.006	**7**	<0.0005	**3.1**	0.0017	0.00019	0.00017	0.046
	11/20/18	200.7/200.8	0.008	**4**	<0.002	<0.006	<0.006	**6.1**	<0.0005	**2.9**	0.0029	<0.001	NA	0.027
	09/04/18	200.7/200.8	0.009	**4.2**	<0.002	<0.006	<0.006	**6.8**	<0.0005	**2.9**	0.0027	<0.001	0.00022	0.0092
	05/02/18	200.7/200.8	0.0075	**4.2**	<0.002	<0.006	<0.006	**9.2**	<0.0005	**3.3**	<0.005	<0.001	0.00014	0.018
	02/14/18	200.7/200.8	0.0083	**4.8**	<0.002	<0.006	<0.006	**9.7**	<0.0005	**3.7**	0.0026	0.0072	0.0003	0.0078
	11/28/17	200.7/200.8	0.0063	**3.9**	<0.002	<0.006	<0.006	**8.2**	<0.0025	**3**	<0.005	<0.005	<0.0025	<0.01
	09/28/17	200.7/200.8	0.0087	**3.7**	<0.002	<0.006	<0.006	**7.5**	<0.0005	**2.8**	<0.005	0.0074	NA	0.01
	06/08/17	200.7/200.8	0.0082	**4**	<0.002	<0.006	<0.006	**5.6**	<0.0005	**3.1**	<0.005	0.0045	0.00051	0.013
	03/02/17	200.7/200.8	**0.011**	**4.8**	<0.002	<0.006	<0.006	**13**	0.00032	**3.4**	0.0009	0.0039	NA	0.02
	11/02/16	200.7/200.8	0.008	**5.8**	<0.002	<0.006	<0.006	**9.4**	<0.005	**5.2**	<0.005	0.0046	0.00065	<0.01
	09/11/16	200.7/200.8	0.0082	**11**	<0.002	<0.006	<0.006	**26**	0.00086	**12**	<0.005	0.0066	0.00091	0.0029
	06/09/16	200.7/200.8	0.0077	**13**	<0.002	<0.006	<0.006	**41**	0.00022	**16**	<0.005	0.0041	0.00049	0.041
	02/29/16	200.7/200.8	0.0083	**14**	<0.002	<0.006	<0.006	**54**	<0.0025	**20**	<0.005	0.0042	0.0015	0.017
	11/03/15	200.7/200.8	0.0056	**13**	<0.002	<0.006	<0.006	**50**	<0.005	**18**	<0.005	0.0067	<0.0005	<0.01
	08/18/15	200.7/200.8	**0.013**	**15**	<0.002	0.013	<0.006	**64**	<0.0025	**22**	<0.005	<0.01	<0.0025	<0.01
	06/04/15	200.7/200.8	*<0.01**	**12**	<0.002	<0.006	<0.006	**53**	<0.01	**18**	<0.005	<0.01	<0.01	0.034
	03/16/15	200.7/200.8	<0.005	**12**	<0.002	<0.006	<0.006	**49**	<0.001	**17**	<0.005	0.0068	<0.001	<0.01
	11/14/14	200.7/200.8	*<0.01**	**17**	<0.002	<0.006	<0.006	**67**	<0.01	**24**	<0.005	<0.01	<0.01	0.018
	09/18/14	200.7/200.8	<0.005	**11**	<0.002	<0.006	<0.006	**33**	<0.001	**14**	<0.005	<0.005	<0.001	<0.01
	06/06/14	200.7/200.8	<0.005	**8.1**	<0.002	<0.006	<0.006	**18**	<0.005	**9.2**	<0.005	0.011	<0.01	<0.01

8.17.3 MKTF WELLS

Dissolved Metals Analytical Result Summary

			PARAMETERS											
STANDARDS			Arsenic (mg/L)	Barium (mg/L)	Cadmium (mg/L)	Chromium (mg/L)	Copper (mg/L)	Iron (mg/L)	Lead (mg/L)	Manganese (mg/L)	Silver (mg/L)	Selenium (mg/L)	Uranium (mg/L)	Zinc (mg/L)
WQCC 20 NMAC 6.2.3103 (DEC 2018)			**0.01**	**2**	**0.005**	**0.05**	**1**	**1**	**0.015**	**0.2**	**0.05**	**0.05**	**0.03**	**10**
40 CFR 141.62 MCL			0.01	2	0.005	0.1	1.3	NE	0.015	NE	NE	0.05	0.03	NE
NMED Tap Water (JUNE 2019)			0.000855	3.28	0.00624	0.0057	0.7898	13.8	NE	2.02	0.0812	0.0987	0.0592	5.96
EPA RSL for Tap Water (NOVEMBER 2019)			0.000052	3.8	0.0092	NE	0.8	14	0.015	0.43	0.094	0.1	0.004	6
WELL ID	DATE SAMPLED	METHOD												
MKTF-11	10/30/19	200.7/200.8	**0.020**	**2.2**	<0.002	<0.006	<0.006	**3.6**	0.000067	**2.8**	0.0029	0.00023	NA	0.018
	08/21/19	200.7/200.8	**0.020**	1.8	<0.002	<0.006	0.0025	**3.4**	<0.0005	**2**	0.0015	0.00039	0.0042	0.0077
	05/13/19	200.7/200.8	**0.016**	**2.1**	<0.002	<0.006	0.0043	**3.1**	<0.0025	**2.4**	0.002	<0.005	0.0045	0.098
	03/26/19	200.7/200.8	0.0085	**2.2**	<0.002	<0.006	<0.006	**2.8**	<0.0005	**2.4**	0.0015	<0.001	0.0042	0.046
	11/20/18	200.7/200.8	0.0098	**3.2**	<0.002	<0.006	<0.006	**3.8**	<0.0005	**4**	0.0052	<0.001	NA	0.04
	09/04/18	200.7/200.8	**0.013**	**3**	<0.002	<0.006	<0.006	**5.2**	<0.0005	**4.1**	0.0044	<0.001	0.006	0.0083
	05/02/18	200.7/200.8	**0.015**	**2.5**	<0.002	<0.006	<0.006	**6.2**	<0.0005	**3.3**	<0.005	<0.005	0.0045	0.0091
	02/08/18	200.7/200.8	**0.012**	**2.4**	<0.002	<0.006	<0.006	**6.1**	<0.0005	**3**	0.0032	0.0045	0.0042	0.0062
	11/28/17	200.7/200.8	**0.013**	**2.8**	<0.002	<0.006	<0.006	**5.8**	<0.0005	**3**	<0.005	<0.005	0.0056	<0.05
	09/26/17	200.7/200.8	**0.011**	**2.9**	<0.002	<0.006	<0.006	**6.8**	<0.0005	**3.1**	<0.005	0.0042	NA	0.03
	06/08/17	200.7/200.8	**0.014**	**2.1**	<0.002	<0.006	<0.006	**5.1**	<0.0005	**2.6**	<0.005	0.0046	0.003	0.011
	03/02/17	200.7/200.8	**0.018**	**2.2**	<0.002	<0.006	<0.006	**5.1**	<0.0005	**3**	0.0014	0.0035	NA	0.031
	11/02/16	200.7/200.8	**0.013**	**2.6**	<0.002	<0.006	<0.006	**5.4**	<0.0005	**3.6**	<0.005	0.0046	0.0059	0.0038
	09/12/16	200.7/200.8	**0.014**	**2.5**	<0.002	<0.006	<0.06	**4.6**	<0.0005	**3.8**	<0.005	0.0062	0.0044	<0.01
	06/09/16	200.7/200.8	**0.014**	**2.5**	<0.002	<0.006	<0.006	**4.3**	<0.0005	**3.5**	<0.005	0.0042	0.0084	<0.01
	02/29/16	200.7/200.8	**0.015**	**3.6**	<0.002	<0.006	<0.006	**8**	0.00031	**5.7**	<0.005	0.0046	0.005	0.011
	11/03/15	200.7/200.8	0.0084	**4**	<0.002	<0.006	<0.006	**12**	<0.0005	**3.6**	<0.005	0.0064	<0.0005	<0.01
	08/18/15	200.7/200.8	*<0.01**	2	<0.002	<0.006	<0.006	**4**	<0.0025	**4**	<0.005	<0.01	0.0034	<0.01
	06/04/15	200.7/200.8	*<0.01**	**2.7**	<0.002	<0.006	<0.006	**9.9**	<0.01	**3**	<0.005	<0.01	<0.01	0.018
	03/16/15	200.7/200.8	0.0087	2	<0.002	<0.006	<0.006	**4.8**	<0.001	**2.9**	<0.005	0.008	0.0013	<0.01
	11/13/14	200.7/200.8	*<0.01**	1.5	<0.002	<0.006	<0.006	**3.4**	<0.001	**3.2**	<0.005	0.0051	0.0033	0.019
	09/15/14	200.7/200.8	0.0086	1.1	<0.002	<0.006	<0.006	**2.7**	<0.001	**2.4**	<0.005	<0.005	0.004	<0.01
	06/05/14	200.7/200.8	0.0064	1.8	<0.002	0.006	<0.006	**11**	**0.022**	**3.6**	<0.005	0.01	<0.01	0.036
MKTF-12			SPH Detected - No samples were collected.											

8.17.3 MKTF WELLS

Dissolved Metals Analytical Result Summary

			PARAMETERS											
STANDARDS			Arsenic (mg/L)	Barium (mg/L)	Cadmium (mg/L)	Chromium (mg/L)	Copper (mg/L)	Iron (mg/L)	Lead (mg/L)	Manganese (mg/L)	Silver (mg/L)	Selenium (mg/L)	Uranium (mg/L)	Zinc (mg/L)
WQCC 20 NMAC 6.2.3103 (DEC 2018)			**0.01**	**2**	**0.005**	**0.05**	**1**	**1**	**0.015**	**0.2**	**0.05**	**0.05**	**0.03**	**10**
40 CFR 141.62 MCL			0.01	2	0.005	0.1	1.3	NE	0.015	NE	NE	0.05	0.03	NE
NMED Tap Water (JUNE 2019)			0.000855	3.28	0.00624	0.0057	0.7898	13.8	NE	2.02	0.0812	0.0987	0.0592	5.96
EPA RSL for Tap Water (NOVEMBER 2019)			0.000052	3.8	0.0092	NE	0.8	14	0.015	0.43	0.094	0.1	0.004	6
WELL ID	DATE SAMPLED	METHOD												
MKTF-13	10/29/19	200.7/200.8	0.0034	**6**	<0.002	<0.006	<0.006	**15**	0.00018	**4.6**	0.0034	0.00026	NA	0.024
	08/20/19	--	SPH Detected - No samples were collected.											
	05/13/19	200.7/200.8	0.0059	**17**	<0.002	<0.006	0.0031	**26**	0.00041	**8.2**	0.009	<0.005	<0.0025	0.046
	03/26/19	200.7/200.8	0.0034	**5.8**	<0.002	<0.006	<0.006	**24**	0.00027	**5.1**	0.0014	0.00031	0.00057	0.022
	11/28/18	200.7/200.8	0.0025	**5.6**	<0.002	<0.006	<0.006	**10**	<0.0005	**4.4**	0.0037	<0.001	NA	0.017
	08/30/18	200.7/200.8	0.0034	**5.8**	<0.002	<0.006	<0.006	**16**	<0.0005	**5.1**	0.0035	<0.001	0.00031	0.011
	05/10/18	200.7/200.8	0.0031	**5.7**	<0.002	<0.006	<0.006	**14**	<0.0025	**4.6**	0.0023	<0.005	<0.005	<0.05
	03/15/17	200.7/200.8	0.0055	**4.7**	<0.002	<0.006	<0.006	**18**	0.00023	**3.9**	<0.005	<0.01	0.00034	0.034
MKTF-14			SPH Detected - No samples were collected.											
MKTF-15	10/30/19	--	SPH Detected - No samples were collected.											
	08/21/19	--	SPH Detected - No samples were collected.											
	05/13/19	200.7/200.8	0.0059	**17**	<0.002	<0.006	0.0031	**26**	0.00041	**8.2**	0.009	<0.005	<0.0025	0.046
	03/25/19	--	SPH Detected - No samples were collected.											
	11/19/18	--	SPH Detected - No samples were collected.											
	08/28/18	200.7/200.8	0.0055	**26**	<0.002	<0.006	<0.006	**36**	<0.0025	**14**	0.02	<0.005	<0.0025	0.0096
	05/02/18	200.7/200.8	0.01	**31**	<0.002	<0.006	<0.006	**46**	<0.005	**17**	0.008	<0.01	<0.005	0.0034
	11/28/17	200.7/200.8	0.0072	**44**	<0.002	<0.006	<0.006	**75**	<0.0025	**23**	*<0.1**	<0.01	<0.0025	<0.01
	06/08/17	200.7/200.8	0.0057	**31**	<0.002	<0.006	<0.006	**54**	<0.0025	**13**	<0.005	0.0062	0.00057	0.011
	03/02/17	200.7/200.8	0.0033	**28**	<0.002	<0.006	<0.006	**45**	<0.0025	**9.5**	0.0066	0.0086	NA	0.019
	11/02/16	200.7/200.8	0.0027	**20**	<0.002	<0.006	<0.006	**26**	<0.0025	**6.5**	<0.005	0.0069	<0.0025	0.014
	09/11/16	200.7/200.8	0.0027	**23**	<0.002	<0.006	<0.006	**32**	0.00048	**7.6**	<0.005	0.0091	0.00023	0.04
	06/09/16	--	SPH Detected - No samples were collected.											
	03/16/16	--	SPH Detected - No samples were collected.											
	1Q & 2Q 2015	--	SPH Detected - No samples were collected.											
	11/14/14	--	SPH Detected - No samples were collected.											
	09/17/14	200.7/200.8	*<0.01**	**27**	<0.002	<0.006	<0.006	**13**	<0.01	**9**	<0.005	<0.01	<0.01	<0.01
	06/05/14	200.7/200.8	<0.005	**25**	<0.002	<0.006	<0.006	**11**	<0.005	**7.5**	<0.005	<0.01	<0.01	0.011

8.17.3 MKTF WELLS

Dissolved Metals Analytical Result Summary

			PARAMETERS											
STANDARDS			Arsenic (mg/L)	Barium (mg/L)	Cadmium (mg/L)	Chromium (mg/L)	Copper (mg/L)	Iron (mg/L)	Lead (mg/L)	Manganese (mg/L)	Silver (mg/L)	Selenium (mg/L)	Uranium (mg/L)	Zinc (mg/L)
WQCC 20 NMAC 6.2.3103 (DEC 2018)			**0.01**	**2**	**0.005**	**0.05**	**1**	**1**	**0.015**	**0.2**	**0.05**	**0.05**	**0.03**	**10**
40 CFR 141.62 MCL			0.01	2	0.005	0.1	1.3	NE	0.015	NE	NE	0.05	0.03	NE
NMED Tap Water (JUNE 2019)			0.000855	3.28	0.00624	0.0057	0.7898	13.8	NE	2.02	0.0812	0.0987	0.0592	5.96
EPA RSL for Tap Water (NOVEMBER 2019)			0.000052	3.8	0.0092	NE	0.8	14	0.015	0.43	0.094	0.1	0.004	6
WELL ID	DATE SAMPLED	METHOD												
MKTF-16	10/30/19	200.7/200.8	**0.012**	**4.3**	<0.002	<0.006	<0.006	**15**	0.00015	**5.5**	0.0033	<0.01	NA	0.026
	08/30/19	200.7/200.8	**0.018**	**6.9**	<0.002	<0.006	<0.006	**21**	<0.0025	**7.1**	<0.005	<0.005	<0.0025	<0.01
	05/14/19	200.7/200.8	0.0093	**2.5**	<0.002	<0.006	<0.006	**5.8**	<0.0025	**2.6**	0.0015	<0.005	<0.0025	0.018
	02/20/19	200.7/200.8	**0.011**	**2.1**	<0.002	<0.006	0.0015	**2**	0.00023	**1.7**	0.0012	0.00038	0.0016	0.024
	11/29/18	200.7/200.8	**0.015**	1.4	<0.002	<0.006	<0.006	**2.7**	<0.0005	**1.5**	<0.005	<0.001	NA	0.031
	08/31/18	200.7/200.8	**0.018**	**2.1**	<0.002	<0.006	<0.006	**1.8**	<0.0005	**1.8**	<0.005	<0.001	0.0062	0.0074
	05/11/18	200.7/200.8	0.01	**2.1**	<0.002	<0.006	<0.006	**3.4**	<0.0025	**1.9**	<0.005	<0.01	0.0067	0.0088
	02/15/18	200.7/200.8	0.0027	0.67	<0.002	<0.006	0.019	0.095	<0.0025	**0.37**	0.002	<0.005	0.002	0.072
	11/29/17	200.7/200.8	**0.015**	**2.7**	<0.002	<0.006	<0.006	**3.5**	<0.0025	**2.1**	<0.005	<0.02	0.0046	<0.01
	09/26/17	200.7/200.8	**0.013**	**2.9**	<0.002	<0.006	<0.006	**8.8**	0.00019	**2.8**	<0.005	*<0.05**	NA	0.018
	06/08/17	200.7/200.8	**0.018**	**2.3**	<0.002	<0.006	<0.006	**1.4**	<0.0025	**1.7**	<0.005	0.018	0.0087	0.014
	03/14/17	200.7/200.8	0.01	1.9	<0.002	<0.006	<0.006	**4.7**	0.00078	**1.8**	<0.005	<0.02	0.0012	0.027
	11/03/16	200.7/200.8	**0.015**	0.69	<0.002	<0.006	<0.006	**2.2**	0.00042	**0.87**	<0.005	0.013	0.0053	0.0041
	09/12/16	200.7/200.8	**0.014**	0.67	<0.002	<0.006	<0.006	**2.4**	0.00027	**0.94**	<0.005	0.013	0.004	<0.01
	02/29/16	200.7/200.8	0.01	1.3	<0.002	<0.006	<0.006	**5.8**	0.00079	**1.7**	<0.005	0.0099	0.00025	0.018
	11/03/15	200.7/200.8	**0.016**	**3.1**	<0.002	<0.006	<0.006	**13**	<0.0005	**3.9**	<0.005	0.019	<0.0005	<0.01
	08/23/15	200.7/200.8	0.01	**2.7**	<0.002	<0.006	<0.006	**11**	<0.0025	**4.1**	<0.005	0.0097	<0.0025	<0.01
	06/08/15	200.7/200.8	0.0087	**2.3**	<0.002	<0.006	<0.006	**11**	<0.005	**3.6**	<0.005	0.0081	<0.005	0.017
	03/16/15	200.7/200.8	*<0.01**	0.94	<0.002	<0.006	<0.006	**5.6**	<0.001	**1.2**	<0.005	<0.02	<0.001	0.024
	11/18/14	200.7/200.8	**0.011**	0.88	<0.002	<0.006	<0.006	**7.2**	<0.001	**1.1**	<0.005	<0.01	<0.001	0.019
	09/17/14	200.7/200.8	**0.011**	0.81	<0.002	<0.006	<0.006	**7.3**	<0.001	**1.1**	<0.005	<0.01	<0.001	0.017
	06/05/14	200.7/200.8	**0.013**	0.81	<0.002	<0.006	<0.006	**7.9**	<0.005	**1.3**	<0.005	0.017	<0.01	0.022

8.17.3 MKTF WELLS

Dissolved Metals Analytical Result Summary

			PARAMETERS											
STANDARDS			Arsenic (mg/L)	Barium (mg/L)	Cadmium (mg/L)	Chromium (mg/L)	Copper (mg/L)	Iron (mg/L)	Lead (mg/L)	Manganese (mg/L)	Silver (mg/L)	Selenium (mg/L)	Uranium (mg/L)	Zinc (mg/L)
WQCC 20 NMAC 6.2.3103 (DEC 2018)			**0.01**	**2**	**0.005**	**0.05**	**1**	**1**	**0.015**	**0.2**	**0.05**	**0.05**	**0.03**	**10**
40 CFR 141.62 MCL			0.01	2	0.005	0.1	1.3	NE	0.015	NE	NE	0.05	0.03	NE
NMED Tap Water (JUNE 2019)			0.000855	3.28	0.00624	0.0057	0.7898	13.8	NE	2.02	0.0812	0.0987	0.0592	5.96
EPA RSL for Tap Water (NOVEMBER 2019)			0.000052	3.8	0.0092	NE	0.8	14	0.015	0.43	0.094	0.1	0.004	6
WELL ID	DATE SAMPLED	METHOD												
MKTF-17	10/29/19	200.7/200.8	0.0044	1.6	<0.002	<0.006	<0.006	0.45	<0.0005	**3.5**	0.0029	0.00018	NA	0.034
	08/20/19	200.7/200.8	0.0047	0.98	<0.002	<0.006	<0.006	0.37	<0.0005	**2.8**	0.0019	<0.001	0.0033	0.0026
	05/09/19	200.7/200.8	0.0035	0.96	<0.002	<0.006	<0.006	0.27	<0.0025	**3**	0.0023	<0.005	0.0037	0.01
	03/26/19	200.7/200.8	0.0022	0.5	<0.002	<0.006	<0.006	0.23	<0.0005	**2.7**	0.0016	0.00027	0.049	0.034
	11/28/18	200.7/200.8	0.0085	0.43	<0.002	<0.006	<0.006	0.27	<0.0005	**2.5**	0.002	<0.001	NA	0.02
	08/24/18	200.7/200.8	0.0048	0.34	<0.002	<0.006	<0.006	0.39	<0.0005	**2.4**	0.0024	<0.001	0.0061	0.0062
	05/04/18	200.7/200.8	0.0049	0.51	<0.002	<0.006	<0.006	0.17	<0.0005	**2.7**	0.0022	<0.001	0.0045	0.0058
	02/16/18	200.7/200.8	0.0067	0.44	<0.002	<0.006	<0.006	0.13	<0.0005	**2.9**	0.0024	<0.01	0.0055	0.0048
	12/01/17	200.7/200.8	0.0033	0.42	<0.002	<0.006	<0.006	0.14	<0.0005	**2.2**	<0.005	<0.005	0.0062	0.0032
	09/26/17	200.7/200.8	0.0065	0.73	<0.002	<0.006	<0.006	**3.2**	<0.0005	**2.8**	<0.005	<0.01	NA	0.021
	06/14/17	200.7/200.8	0.0079	0.74	<0.002	<0.006	<0.006	**2.9**	<0.0005	**2.7**	<0.005	<0.005	NA	0.0095
	03/15/17	200.7/200.8	0.005	0.76	<0.002	<0.006	<0.006	**1.3**	<0.0005	**2.6**	<0.005	<0.005	0.0054	0.023
	11/08/16	200.7/200.8	0.0046	0.52	<0.002	<0.006	<0.006	0.21	<0.0005	**2.7**	<0.005	0.003	0.0069	<0.01
	09/13/16	200.7/200.8	0.0062	0.65	<0.002	<0.006	<0.006	0.23	<0.005	**3**	<0.005	0.0046	0.008	<0.01
	02/26/16	200.7/200.8	0.003	0.095	<0.002	<0.006	<0.006	0.093	0.00012	**2.8**	<0.005	0.0015	0.018	0.02
	11/03/15	200.7/200.8	0.01	0.19	<0.002	<0.006	<0.006	0.65	<0.0005	**3.5**	<0.005	0.0045	0.013	<0.01
	08/18/15	200.7/200.8	*<0.01**	0.097	*<0.02**	<0.006	<0.006	0.49	<0.0025	**2.8**	<0.005	<0.01	0.017	<0.01
	06/08/15	200.7/200.8	<0.005	0.11	<0.002	<0.006	<0.006	0.14	<0.002	**3.1**	<0.005	<0.005	0.021	<0.01
	03/12/15	200.7/200.8	0.0062	0.13	<0.002	<0.006	<0.006	0.57	<0.001	**3**	<0.005	0.0058	0.021	<0.01
	11/18/14	200.7/200.8	0.0047	0.14	<0.002	<0.006	<0.006	0.08	<0.001	**2.8**	<0.005	<0.01	0.022	0.027
	09/18/14	200.7/200.8	0.0053	0.16	<0.002	<0.006	<0.006	0.27	<0.001	**3.1**	<0.005	<0.005	0.022	0.018
	06/16/14	200.7/200.8	0.0054	0.24	<0.002	<0.006	<0.006	0.94	<0.005	**3.3**	<0.005	<0.005	0.022	0.14

8.17.3 MKTF WELLS

Dissolved Metals Analytical Result Summary

			PARAMETERS											
STANDARDS			Arsenic (mg/L)	Barium (mg/L)	Cadmium (mg/L)	Chromium (mg/L)	Copper (mg/L)	Iron (mg/L)	Lead (mg/L)	Manganese (mg/L)	Silver (mg/L)	Selenium (mg/L)	Uranium (mg/L)	Zinc (mg/L)
WQCC 20 NMAC 6.2.3103 (DEC 2018)			**0.01**	**2**	**0.005**	**0.05**	**1**	**1**	**0.015**	**0.2**	**0.05**	**0.05**	**0.03**	**10**
40 CFR 141.62 MCL			0.01	2	0.005	0.1	1.3	NE	0.015	NE	NE	0.05	0.03	NE
NMED Tap Water (JUNE 2019)			0.000855	3.28	0.00624	0.0057	0.7898	13.8	NE	2.02	0.0812	0.0987	0.0592	5.96
EPA RSL for Tap Water (NOVEMBER 2019)			0.000052	3.8	0.0092	NE	0.8	14	0.015	0.43	0.094	0.1	0.004	6
WELL ID	DATE SAMPLED	METHOD												
MKTF-18	10/29/19	200.7/200.8	0.0012	2	<0.002	<0.006	<0.006	0.65	<0.0005	**2.1**	0.0024	<0.001	NA	0.019
	08/19/19	--	SPH Detected - No samples were collected.											
	05/16/19	200.7/200.8	0.0014	2	<0.002	<0.006	0.0038	**2**	0.00007	**2.1**	0.0017	0.0003	0.00065	0.015
	03/26/19	200.7/200.8	0.00081	**2.2**	<0.002	<0.006	0.0063	**2.8**	<0.005	**2**	<0.005	<0.001	0.0005	0.022
	11/28/18	200.7/200.8	0.0018	1.4	<0.002	<0.006	0.0063	0.11	0.00042	**2**	0.002	<0.001	NA	0.027
	08/24/18	200.7/200.8	0.0016	**2.1**	<0.002	<0.006	<0.006	0.68	<0.0005	**2.2**	0.0027	<0.001	0.0006	0.0081
	05/04/18	200.7/200.8	0.0014	**2.1**	<0.002	<0.006	<0.006	0.41	<0.0005	**2.2**	0.0019	<0.001	0.00064	0.0058
	02/16/18	200.7/200.8	<0.005	**2.2**	<0.002	<0.006	<0.006	0.42	<0.0005	**2.2**	<0.005	0.0046	0.0008	0.0083
	06/14/17	200.7/200.8	0.0029	1.9	<0.002	<0.006	0.0063	**2.6**	<0.0005	**1.9**	<0.005	0.0025	NA	0.011
	03/01/17	200.7/200.8	0.0023	2	<0.002	<0.006	<0.006	**1.4**	<0.0005	**1.9**	<0.005	0.0043	NA	0.024
	11/08/16	200.7/200.8	0.0025	1.7	<0.002	<0.006	<0.006	0.81	<0.0005	**1.9**	<0.005	0.0053	0.001	<0.01
	09/13/16	200.7/200.8	0.0026	1.8	<0.002	<0.006	<0.006	0.89	<0.0005	**2**	<0.005	0.0072	0.0012	<0.01
	06/10/16	200.7/200.8	0.0023	1.9	<0.002	<0.006	<0.006	**1.5**	<0.0005	**1.9**	<0.005	0.0054	0.0011	<0.01
	02/26/16	200.7/200.8	0.002	**2.1**	<0.002	<0.006	<0.006	**2.1**	0.00039	**1.9**	<0.005	0.0018	0.0012	0.011
	11/03/15	200.7/200.8	0.0031	**2.5**	<0.002	<0.006	<0.006	**4.8**	0.0053	**1.9**	<0.005	<0.01	0.0012	<0.01
	08/18/15	200.7/200.8	*<0.01**	2	<0.002	<0.006	<0.006	**1.2**	<0.0025	**1.7**	<0.005	<0.01	<0.0025	<0.01
	06/08/15	200.7/200.8	<0.005	**2.5**	<0.002	<0.006	<0.006	**3.9**	<0.002	**1.8**	<0.005	<0.005	<0.002	<0.01
	03/17/15	200.7/200.8	*<0.01**	**2.5**	<0.002	<0.006	<0.006	**3.8**	<0.001	**1.8**	<0.005	<0.01	<0.001	<0.01
	11/18/14	200.7/200.8	0.002	**2.4**	<0.002	<0.006	<0.006	**3.4**	<0.001	**1.7**	<0.005	<0.01	<0.001	0.025
	09/18/14	200.7/200.8	<0.005	**2.3**	<0.002	<0.006	<0.006	0.3	<0.001	**1.7**	<0.005	<0.005	0.0012	0.012
	06/06/14	200.7/200.8	<0.005	**2.4**	<0.002	<0.006	<0.006	**4.5**	<0.005	**2**	<0.005	0.0086	<0.01	<0.01

8.17.3 MKTF WELLS

Dissolved Metals Analytical Result Summary

			PARAMETERS											
STANDARDS			Arsenic (mg/L)	Barium (mg/L)	Cadmium (mg/L)	Chromium (mg/L)	Copper (mg/L)	Iron (mg/L)	Lead (mg/L)	Manganese (mg/L)	Silver (mg/L)	Selenium (mg/L)	Uranium (mg/L)	Zinc (mg/L)
WQCC 20 NMAC 6.2.3103 (DEC 2018)			**0.01**	**2**	**0.005**	**0.05**	**1**	**1**	**0.015**	**0.2**	**0.05**	**0.05**	**0.03**	**10**
40 CFR 141.62 MCL			0.01	2	0.005	0.1	1.3	NE	0.015	NE	NE	0.05	0.03	NE
NMED Tap Water (JUNE 2019)			0.000855	3.28	0.00624	0.0057	0.7898	13.8	NE	2.02	0.0812	0.0987	0.0592	5.96
EPA RSL for Tap Water (NOVEMBER 2019)			0.000052	3.8	0.0092	NE	0.8	14	0.015	0.43	0.094	0.1	0.004	6
WELL ID	DATE SAMPLED	METHOD												
MKTF-19	10/29/19	200.7/200.8	**0.013**	1.9	<0.002	<0.006	<0.006	**10**	0.0017	**2.4**	0.0021	0.00052	NA	0.017
	08/19/19	200.7/200.8	**0.013**	1.8	<0.002	<0.006	<0.006	**11**	0.002	**2.3**	0.0015	<0.001	0.00019	0.0084
	05/09/19	200.7/200.8	**0.013**	1.8	<0.002	<0.006	<0.006	**11**	0.0017	**2.4**	0.0016	<0.005	0.001	0.034
	03/26/19	200.7/200.8	**0.013**	1.8	<0.002	<0.006	<0.006	**9.9**	0.002	**2.2**	0.0013	0.00039	0.00029	0.026
	11/28/18	200.7/200.8	**0.011**	1.2	<0.002	<0.006	<0.006	**8.3**	0.0017	**2.2**	0.0022	<0.001	0.00089	0.018
	08/24/18	200.7/200.8	**0.014**	1.8	<0.002	<0.006	<0.006	**10**	0.0016	**2.3**	0.0025	<0.001	0.00075	0.0097
	05/04/18	200.7/200.8	**0.015**	1.8	<0.002	<0.006	<0.006	**10**	0.0017	**2.4**	<0.005	<0.001	0.0003	0.0042
	02/16/18	200.7/200.8	0.0096	1.7	<0.002	<0.006	<0.006	**9.6**	0.002	**2.4**	<0.005	<0.01	0.00049	0.0071
	12/01/17	200.7/200.8	0.0091	1.5	<0.002	<0.006	<0.006	**9.2**	0.0017	**2.1**	<0.005	<0.005	0.00089	<0.01
	09/26/17	200.7/200.8	**0.014**	1.6	<0.002	<0.006	<0.006	**12**	0.0016	**3.1**	<0.005	0.0048	NA	0.021
	06/14/17	200.7/200.8	**0.014**	1.7	<0.002	<0.006	<0.006	**10**	0.0019	**2.6**	<0.005	<0.02	NA	0.011
	03/15/17	200.7/200.8	**0.015**	1.7	<0.002	<0.006	<0.006	**9**	0.0022	**2.4**	<0.005	<0.01	0.0021	0.031
	11/08/16	200.7/200.8	**0.011**	1.6	<0.002	<0.006	<0.006	**8.5**	0.0023	**2.2**	<0.005	0.0075	0.0016	0.0091
	09/13/16	200.7/200.8	**0.017**	1.7	<0.002	<0.006	<0.006	**10**	0.0023	**2.4**	<0.005	0.0082	0.00064	0.0044
	06/10/16	200.7/200.8	**0.015**	1.6	<0.002	<0.006	<0.006	**9.7**	0.0022	**2.7**	<0.005	0.013	0.00045	0.0062
	02/25/16	200.7/200.8	**0.015**	1.7	<0.002	<0.006	<0.006	**11**	0.0034	**3.1**	<0.005	0.0038	0.0006	0.0097
	11/03/15	200.7/200.8	**0.018**	1.7	<0.002	<0.006	<0.006	**13**	0.0016	**3.4**	<0.005	*<0.05**	<0.0005	<0.01
	08/18/15	200.7/200.8	**0.02**	1.7	<0.002	<0.006	<0.006	**14**	0.0032	**3.2**	<0.005	<0.01	<0.0025	0.02
	06/08/15	200.7/200.8	**0.019**	1.7	<0.002	<0.006	<0.006	**12**	<0.002	**3.3**	<0.005	<0.01	<0.002	<0.01
	03/12/15	200.7/200.8	**0.021**	1.6	<0.002	<0.006	<0.006	**9.5**	0.0017	**3.1**	<0.005	<0.02	<0.001	0.012
	11/18/14	200.7/200.8	**0.022**	1.6	<0.002	<0.006	<0.006	**11**	0.0019	**3**	<0.005	<0.01	<0.001	0.018

8.17.3 MKTF WELLS

Dissolved Metals Analytical Result Summary

			PARAMETERS											
STANDARDS			Arsenic (mg/L)	Barium (mg/L)	Cadmium (mg/L)	Chromium (mg/L)	Copper (mg/L)	Iron (mg/L)	Lead (mg/L)	Manganese (mg/L)	Silver (mg/L)	Selenium (mg/L)	Uranium (mg/L)	Zinc (mg/L)
WQCC 20 NMAC 6.2.3103 (DEC 2018)			**0.01**	**2**	**0.005**	**0.05**	**1**	**1**	**0.015**	**0.2**	**0.05**	**0.05**	**0.03**	**10**
40 CFR 141.62 MCL			0.01	2	0.005	0.1	1.3	NE	0.015	NE	NE	0.05	0.03	NE
NMED Tap Water (JUNE 2019)			0.000855	3.28	0.00624	0.0057	0.7898	13.8	NE	2.02	0.0812	0.0987	0.0592	5.96
EPA RSL for Tap Water (NOVEMBER 2019)			0.000052	3.8	0.0092	NE	0.8	14	0.015	0.43	0.094	0.1	0.004	6
WELL ID	DATE SAMPLED	METHOD												
MKTF-20	11/05/19	200.7/200.8	0.01	**2.1**	<0.002	<0.006	0.0058	**2.2**	0.00026	**2.1**	0.0022	0.00067	0.00022	0.083
	08/21/19	200.7/200.8	**0.02**	**22**	<0.002	<0.006	0.014	**20**	0.003	**8.1**	0.0068	0.0013	0.0027	0.021
	05/14/19	200.7/200.8	**0.027**	**5**	<0.002	<0.006	0.0035	**22**	0.002	**9**	0.0079	0.0015	0.0027	0.022
	02/20/19	200.7/200.8	**0.036**	**3.6**	*<0.01**	<0.03	0.0094	**47**	0.0035	**5.5**	<0.025	<0.005	0.0012	0.16
	11/29/18	200.7/200.8	**0.019**	**4.9**	<0.002	<0.006	0.0059	**2.5**	0.00078	**2.5**	0.0026	<0.001	0.0023	0.061
	08/31/18	200.7/200.8	**0.026**	**4**	<0.002	<0.006	0.011	**5.3**	0.0039	**2.8**	0.0036	<0.005	0.0012	0.014
	05/11/18	200.7/200.8	**0.023**	**8.8**	<0.002	<0.006	0.014	**17**	0.0043	**5.4**	0.0038	0.01	0.0037	0.022
	02/15/18	200.7/200.8	0.0096	**33**	<0.002	<0.006	<0.006	**53**	0.0015	**17**	0.011	0.01	0.0017	0.0093
	11/29/17	200.7/200.8	**0.017**	**8.6**	<0.002	<0.006	0.014	**13**	0.0033	**3**	<0.005	<0.02	0.0023	0.0086
	09/26/17	200.7/200.8	**0.02**	**8.5**	<0.002	<0.006	<0.006	**16**	0.00097	**3.8**	<0.005	*<0.1**	NA	0.027
	06/12/17	200.7/200.8	**0.021**	**7.6**	<0.002	<0.006	0.0037	**17**	0.0042	**4.1**	<0.005	*<0.05**	NA	0.019
	03/14/17	200.7/200.8	**0.019**	**12**	<0.002	<0.006	<0.006	**23**	0.0023	**7.2**	<0.005	*<0.05**	0.00053	0.041
	11/03/16	200.7/200.8	**0.029**	**8.6**	<0.002	<0.006	0.0073	**20**	0.009	**8**	<0.005	0.013	0.0052	0.014
	09/12/16	200.7/200.8	**0.027**	**4.7**	<0.002	<0.006	0.0046	**14**	0.004	**3.8**	<0.005	0.0079	0.0033	0.012
	06/09/16	200.7/200.8	**0.034**	**3.3**	<0.002	<0.006	0.022	**12**	0.012	**3.9**	<0.005	0.0078	0.018	0.016
	06/08/15	200.7/200.8	**0.012**	1.5	<0.002	<0.006	<0.006	**3.6**	<0.005	**2**	<0.005	<0.005	<0.005	0.045
	03/16/15	200.7/200.8	**0.022**	2	<0.002	<0.006	<0.006	**8.6**	0.0013	**3.1**	<0.005	<0.01	0.0088	<0.01

8.17.3 MKTF WELLS

Dissolved Metals Analytical Result Summary

			PARAMETERS											
STANDARDS			Arsenic (mg/L)	Barium (mg/L)	Cadmium (mg/L)	Chromium (mg/L)	Copper (mg/L)	Iron (mg/L)	Lead (mg/L)	Manganese (mg/L)	Silver (mg/L)	Selenium (mg/L)	Uranium (mg/L)	Zinc (mg/L)
WQCC 20 NMAC 6.2.3103 (DEC 2018)			0.01	2	0.005	0.05	1	1	0.015	0.2	0.05	0.05	0.03	10
40 CFR 141.62 MCL			0.01	2	0.005	0.1	1.3	NE	0.015	NE	NE	0.05	0.03	NE
NMED Tap Water (JUNE 2019)			0.000855	3.28	0.00624	0.0057	0.7898	13.8	NE	2.02	0.0812	0.0987	0.0592	5.96
EPA RSL for Tap Water (NOVEMBER 2019)			0.000052	3.8	0.0092	NE	0.8	14	0.015	0.43	0.094	0.1	0.004	6
WELL ID	DATE SAMPLED	METHOD												
MKTF-21	11/05/19	200.7/200.8	0.019	14	<0.002	<0.006	0.0061	8.3	0.0011	6.2	0.0096	0.0011	0.0031	0.096
	08/22/19	200.7/200.8	0.014	3.4	<0.002	<0.006	<0.006	16	0.00029	3.4	<0.005	0.00082	0.00047	0.015
	05/14/19	200.7/200.8	0.016	5	<0.002	<0.006	0.0032	33	0.0011	5.6	0.0017	0.0011	0.0021	0.065
	02/20/19	200.7/200.8	0.013	0.13	<0.002	<0.006	0.00369	57	0.0014	14	0.0091	0.0017	0.0029	0.046
	11/29/18	200.7/200.8	0.011	3.4	<0.002	<0.006	<0.006	9.3	0.00021	3.6	0.0032	<0.001	0.0022	0.053
	08/31/18	200.7/200.8	0.02	4.1	<0.002	<0.006	<0.006	16	<0.0025	3.6	0.0023	<0.005	0.0011	0.014
	05/11/18	200.7/200.8	0.022	3.8	<0.002	<0.006	<0.006	31	0.00035	5.8	<0.005	0.0071	0.0026	0.018
	02/15/18	200.7/200.8	0.016	2.5	<0.002	<0.006	<0.006	9.2	0.0018	5.2	0.0025	0.0087	0.0055	0.026
	11/28/17	200.7/200.8	0.012	3.7	<0.002	<0.006	<0.006	15	0.00034	4.4	<0.005	0.0084	0.0022	0.011
	09/26/17	200.7/200.8	0.0077	2.7	<0.002	<0.006	<0.006	5.6	<0.0005	3.9	<0.005	<0.02	NA	0.028
	06/21/17	200.7/200.8	0.014	3.9	<0.002	<0.006	<0.006	39	0.00086	6.7	<0.005	*<0.05**	0.00052	0.02
	03/14/17	200.7/200.8	0.011	3.7	<0.002	<0.006	<0.006	26	0.0012	5.7	<0.005	0.0039	0.00052	0.045
	11/03/16	200.7/200.8	0.019	4.3	<0.002	<0.006	<0.006	30	0.00098	5	<0.005	0.012	0.002	0.017
	09/12/16	200.7/200.8	0.02	2.5	<0.002	<0.006	<0.006	22	0.0018	3.7	<0.005	0.0094	0.00071	0.023
	06/10/15	--	Not enough water to collect for this set.											
	03/16/15	200.7/200.8	0.011	1.9	<0.002	<0.006	<0.006	18	0.012	3.1	<0.005	<0.01	0.0012	0.074
MKTF-22	10/24/19	200.7/200.8	0.0017	1.4	<0.002	<0.006	0.0034	6.8	<0.0005	2.9	0.0030	<0.005	NA	0.021
	08/20/19	200.7/200.8	0.0013	1.2	<0.002	<0.006	<0.006	6.8	<0.0005	2.6	0.0016	<0.001	0.0021	0.004
	05/09/19	200.7/200.8	0.0015	1.1	<0.002	<0.006	<0.006	7.3	<0.0025	2.6	0.0014	0.001	0.0024	0.0081
	03/26/19	200.7/200.8	0.0012	1.3	<0.002	<0.006	<0.006	2.3	0.000067	2.5	0.0019	0.0002	0.0022	0.021
	11/28/18	200.7/200.8	0.0011	1.1	<0.002	<0.006	<0.006	1.4	<0.0005	2.5	0.0024	<0.001	NA	0.01
	08/30/18	200.7/200.8	0.0014	1.4	<0.002	<0.006	<0.006	3	<0.0005	2.4	0.0025	<0.001	0.002	0.006
	05/10/18	200.7/200.8	0.0014	1.2	<0.002	<0.006	<0.006	1.4	<0.0025	2.4	0.002	<0.005	0.0019	0.0057
	02/08/18	200.7/200.8	<0.005	1	<0.002	<0.006	<0.006	1	<0.0005	2.2	0.0035	<0.0005	0.0025	0.0055
	11/28/17	200.7/200.8	0.0025	1.4	<0.002	<0.006	<0.006	1.6	<0.0005	2.3	<0.005	<0.005	0.0023	<0.01
	10/03/17	200.7/200.8	0.0017	1.6	<0.002	<0.006	<0.006	7.1	0.00031	2.6	<0.005	0.0029	NA	0.028
	06/08/17	200.7/200.8	0.0022	1	<0.002	<0.006	<0.006	0.98	<0.0005	2.1	<0.005	0.0035	0.003	0.011
	03/08/17	200.7/200.8	0.0022	1.4	<0.002	<0.006	<0.006	4.2	<0.0005	2.3	<0.005	0.0042	NA	0.025
	11/01/16	200.7/200.8	0.0021	1.2	<0.002	<0.006	<0.006	3	<0.0005	2.5	<0.005	0.0038	0.0024	0.0099
	09/10/16	200.7/200.8	0.0024	1.1	<0.002	<0.006	<0.006	2.7	0.0014	2.3	<0.005	0.0053	0.0028	<0.01
	06/10/16	200.7/200.8	0.0025	1.1	<0.002	<0.006	<0.006	2.9	<0.0005	2.2	<0.005	0.0046	0.0028	<0.01
	02/25/16	200.7/200.8	0.0014	1.3	<0.002	<0.006	<0.006	6.3	0.00053	2.3	<0.005	0.0015	0.0019	0.011
	11/09/15	200.7/200.8	0.0033	0.92	<0.002	<0.006	<0.006	5.9	0.0083	2.4	<0.005	<0.005	0.0048	<0.01
	08/20/15	200.7/200.8	<0.005	0.37	<0.002	<0.006	<0.006	8.5	<0.0025	1.9	<0.005	<0.005	0.013	<0.01
	06/09/15	200.7/200.8	<0.005	1.1	<0.002	<0.006	<0.006	6.8	<0.002	2.3	<0.005	<0.005	0.0038	0.029
	03/12/15	200.7/200.8	0.0031	1.3	<0.002	<0.006	<0.006	7.5	0.0016	2.3	<0.005	0.0067	0.0032	<0.01
	11/17/14	200.7/200.8	<0.005	0.78	<0.002	<0.006	<0.006	6.8	0.001	2.2	<0.005	<0.005	0.0053	0.024

8.17.3 MKTF WELLS

Dissolved Metals Analytical Result Summary

			PARAMETERS											
STANDARDS			Arsenic (mg/L)	Barium (mg/L)	Cadmium (mg/L)	Chromium (mg/L)	Copper (mg/L)	Iron (mg/L)	Lead (mg/L)	Manganese (mg/L)	Silver (mg/L)	Selenium (mg/L)	Uranium (mg/L)	Zinc (mg/L)
WQCC 20 NMAC 6.2.3103 (DEC 2018)			**0.01**	**2**	**0.005**	**0.05**	**1**	**1**	**0.015**	**0.2**	**0.05**	**0.05**	**0.03**	**10**
40 CFR 141.62 MCL			0.01	2	0.005	0.1	1.3	NE	0.015	NE	NE	0.05	0.03	NE
NMED Tap Water (JUNE 2019)			0.000855	3.28	0.00624	0.0057	0.7898	13.8	NE	2.02	0.0812	0.0987	0.0592	5.96
EPA RSL for Tap Water (NOVEMBER 2019)			0.000052	3.8	0.0092	NE	0.8	14	0.015	0.43	0.094	0.1	0.004	6
WELL ID	DATE SAMPLED	METHOD												
MKTF-23	10/29/19	200.7/200.8	0.0084	1.7	<0.002	<0.006	<0.006	0.16	0.00072	**2**	0.0012	0.00032	NA	0.023
	08/20/19	--	SPH Detected - No samples were collected.											
	05/09/19	--	SPH Detected - No samples were collected.											
	03/26/19	200.7/200.8	0.0055	1.4	<0.002	<0.006	<0.006	0.21	0.00063	**2**	0.0015	0.00036	0.0082	0.041
	06/10/16	200.7/200.8	0.01	0.66	<0.002	<0.006	<0.006	**2.6**	0.00065	**1.8**	<0.005	0.009	0.0022	<0.01
	02/25/16	200.7/200.8	0.01	0.58	<0.002	<0.006	<0.006	**3.8**	0.00038	**1.8**	<0.005	0.0042	0.0018	0.0083
	11/09/15	200.7/200.8	**0.015**	0.71	<0.002	<0.006	<0.006	0.99	<0.0025	**1.4**	<0.005	*<0.05**	0.024	<0.01
	08/21/15	200.7/200.8	**0.011**	0.7	<0.002	<0.006	<0.006	0.34	<0.0005	**1.3**	<0.005	<0.01	0.014	<0.01
	06/09/15	200.7/200.8	0.01	0.75	<0.002	<0.006	<0.006	**2.4**	<0.002	**1.5**	<0.005	<0.005	0.0072	<0.01
	03/12/15	200.7/200.8	**0.013**	0.61	<0.002	<0.006	<0.006	**4.4**	<0.001	**1.9**	<0.005	<0.02	0.0045	<0.01
	11/17/14	200.7/200.8	0.01	0.57	<0.002	<0.006	<0.006	**3.1**	<0.001	**1.7**	<0.005	<0.01	0.013	0.018
MKTF-24	10/23/19	200.7/200.8	0.0031	0.38	<0.002	<0.006	<0.006	0.59	0.00098	**2.4**	0.003	<0.005	NA	0.025
	08/23/19	200.7/200.8	0.0028	0.34	<0.002	<0.006	0.0018	**1.6**	0.0009	**2.2**	0.0024	0.00051	0.011	0.011
	05/06/19	200.7/200.8	0.0033	0.32	<0.002	<0.006	0.0035	**5.7**	0.00036	**2.3**	0.004	<0.005	0.011	0.03
	02/25/19	--	Well not sampled.											
	11/15/18	200.7/200.8	0.0013	0.25	<0.002	<0.006	0.0035	0.1	0.0012	**1.8**	0.0027	<0.001	0.013	0.027
	08/20/18	200.7/200.8	0.0021	0.25	<0.002	<0.006	<0.006	0.33	0.0014	**1.8**	0.0028	<0.001	0.015	0.018
	05/01/18	200.7/200.8	0.0025	0.26	<0.002	<0.006	<0.006	0.26	0.0011	**1.9**	<0.005	<0.005	0.013	0.0047
	02/06/18	200.7/200.8	0.0028	0.27	<0.002	<0.006	<0.006	0.24	0.0014	**2.2**	0.0029	<0.005	0.014	0.0096
	11/20/17	200.7/200.8	0.0025	0.26	<0.002	<0.006	<0.006	0.24	0.0013	**2.1**	0.002	<0.005	0.013	0.0035
	10/03/17	200.7/200.8	0.0047	0.23	<0.002	<0.006	<0.006	0.85	0.0006	**1.6**	<0.005	0.0094	NA	0.058
	06/05/17	200.7/200.8	0.0029	0.25	<0.002	<0.006	<0.006	0.21	0.0012	**2.1**	<0.005	0.0052	0.017	0.015
	03/29/17	200.7/200.8	0.0031	0.29	<0.002	<0.006	<0.006	0.55	0.0012	**1.6**	<0.005	0.0057	**0.033**	0.018
	10/28/16	200.7/200.8	0.0033	0.23	<0.002	<0.006	<0.006	0.069	0.0012	**2**	<0.005	0.0064	0.017	<0.01
	09/07/16	200.7/200.8	0.0035	0.24	<0.002	<0.006	<0.006	0.19	0.0015	**1.9**	<0.005	0.0063	0.02	0.0071
	06/08/16	200.7/200.8	0.0045	0.27	<0.002	<0.006	<0.006	0.65	0.0019	**1.9**	<0.005	0.0084	0.027	<0.01
	02/22/16	200.7/200.8	0.0026	0.25	<0.002	<0.006	<0.006	0.21	0.0012	**1.9**	<0.005	0.0031	0.023	0.012
	11/04/15	200.7/200.8	<0.005	0.26	<0.002	<0.006	<0.006	0.41	0.0016	**1.3**	<0.005	0.0091	**0.032**	<0.01
	08/20/15	200.7/200.8	<0.005	0.31	<0.002	<0.006	<0.006	**4.1**	0.0027	**1.5**	<0.005	<0.005	**0.035**	<0.01
	06/10/15	200.7/200.8	<0.005	0.29	<0.002	<0.006	<0.006	0.69	<0.005	**1.4**	<0.005	0.0058	**0.037**	0.021
	03/11/15	200.7/200.8	<0.005	0.26	<0.002	<0.006	<0.006	0.34	0.0015	**1.2**	<0.005	0.011	**0.043**	<0.01
	11/14/14	200.7/200.8	<0.005	0.29	<0.002	<0.006	<0.006	**4.4**	<0.005	**1.6**	<0.005	<0.005	**0.038**	0.018

8.17.3 MKTF WELLS

Dissolved Metals Analytical Result Summary

			PARAMETERS											
STANDARDS			Arsenic (mg/L)	Barium (mg/L)	Cadmium (mg/L)	Chromium (mg/L)	Copper (mg/L)	Iron (mg/L)	Lead (mg/L)	Manganese (mg/L)	Silver (mg/L)	Selenium (mg/L)	Uranium (mg/L)	Zinc (mg/L)
WQCC 20 NMAC 6.2.3103 (DEC 2018)			**0.01**	**2**	**0.005**	**0.05**	**1**	**1**	**0.015**	**0.2**	**0.05**	**0.05**	**0.03**	**10**
40 CFR 141.62 MCL			0.01	2	0.005	0.1	1.3	NE	0.015	NE	NE	0.05	0.03	NE
NMED Tap Water (JUNE 2019)			0.000855	3.28	0.00624	0.0057	0.7898	13.8	NE	2.02	0.0812	0.0987	0.0592	5.96
EPA RSL for Tap Water (NOVEMBER 2019)			0.000052	3.8	0.0092	NE	0.8	14	0.015	0.43	0.094	0.1	0.004	6
WELL ID	DATE SAMPLED	METHOD												
MKTF-25	10/23/19	200.7/200.8	0.0037	0.53	<0.002	<0.006	0.0034	0.28	<0.0025	**5.4**	0.005	<0.005	NA	0.018
	08/27/19	200.7/200.8	0.0014	0.39	<0.002	<0.006	0.0055	0.25	0.00052	**3.6**	0.0027	<0.005	**0.037**	0.01
	05/06/19	200.7/200.8	0.0019	0.43	<0.002	<0.006	0.0021	0.21	0.00055	**1.8**	0.0044	<0.005	**0.033**	0.035
	02/14/19	--	Well not sampled.											
	11/15/18	200.7/200.8	0.0043	0.31	<0.002	<0.006	<0.006	0.048	<0.0005	**2.9**	0.0023	<0.001	**0.047**	0.031
	08/17/18	200.7/200.8	0.0052	0.33	<0.002	<0.006	0.0051	0.97	0.00025	**2.4**	0.0033	<0.001	0.027	0.0075
	05/06/18	200.7/200.8	0.0041	0.26	<0.002	<0.006	0.0073	0.75	<0.0005	**2.4**	0.0021	<0.001	0.023	0.0096
	02/05/18	200.7/200.8	0.0041	0.28	<0.002	<0.006	<0.006	0.7	0.00024	**2.6**	0.0023	<0.005	0.023	0.0074
	11/21/17	200.7/200.8	0.0042	0.28	<0.002	<0.006	<0.006	0.8	0.00022	**2.4**	<0.005	<0.005	0.024	<0.01
	09/25/17	200.7/200.8	0.0044	0.24	<0.002	<0.006	<0.006	0.57	0.00039	**2.4**	<0.005	0.0047	NA	0.018
	06/05/17	200.7/200.8	0.0047	0.18	<0.002	<0.006	<0.006	0.57	0.00027	**2.3**	<0.005	0.0044	0.027	0.014
	03/29/17	200.7/200.8	0.0054	0.27	<0.002	<0.006	<0.006	0.56	0.00082	**2.6**	<0.005	0.0076	0.029	0.02
	11/01/16	200.7/200.8	0.0047	0.28	<0.002	<0.006	<0.006	0.35	0.00031	**2.5**	<0.005	0.0067	**0.037**	0.035
	09/09/16	200.7/200.8	0.0058	0.31	<0.002	<0.006	<0.006	0.11	0.0066	**2.7**	<0.005	0.0074	**0.032**	0.0089
	06/09/16	200.7/200.8	0.0049	0.32	<0.002	<0.006	<0.006	0.47	0.001	**2.9**	<0.005	0.0096	0.03	<0.01
	02/23/16	200.7/200.8	0.0036	0.28	<0.002	<0.006	<0.006	0.46	0.00027	**2.9**	<0.005	0.0033	0.03	0.013
	11/05/15	200.7/200.8	<0.005	0.34	<0.002	<0.006	<0.006	0.4	0.0017	**3.2**	<0.005	0.0078	0.03	<0.01
	08/21/15	200.7/200.8	0.0043	0.35	<0.002	<0.006	<0.006	0.57	0.00051	**3.3**	<0.005	<0.01	**0.034**	<0.01
	06/10/15	200.7/200.8	<0.005	0.32	<0.002	<0.006	<0.006	0.64	<0.005	**3.2**	<0.005	0.005	**0.033**	0.016
	03/11/15	200.7/200.8	*<0.01**	0.26	<0.002	<0.006	<0.006	0.2	<0.001	**3.2**	<0.005	<0.02	**0.038**	0.017
	11/14/14	200.7/200.8	<0.005	0.28	<0.002	<0.006	<0.006	0.21	<0.005	**3.1**	<0.005	<0.005	0.03	0.1

8.17.3 MKTF WELLS

Dissolved Metals Analytical Result Summary

			PARAMETERS											
STANDARDS			Arsenic (mg/L)	Barium (mg/L)	Cadmium (mg/L)	Chromium (mg/L)	Copper (mg/L)	Iron (mg/L)	Lead (mg/L)	Manganese (mg/L)	Silver (mg/L)	Selenium (mg/L)	Uranium (mg/L)	Zinc (mg/L)
WQCC 20 NMAC 6.2.3103 (DEC 2018)			**0.01**	**2**	**0.005**	**0.05**	**1**	**1**	**0.015**	**0.2**	**0.05**	**0.05**	**0.03**	**10**
40 CFR 141.62 MCL			0.01	2	0.005	0.1	1.3	NE	0.015	NE	NE	0.05	0.03	NE
NMED Tap Water (JUNE 2019)			0.000855	3.28	0.00624	0.0057	0.7898	13.8	NE	2.02	0.0812	0.0987	0.0592	5.96
EPA RSL for Tap Water (NOVEMBER 2019)			0.000052	3.8	0.0092	NE	0.8	14	0.015	0.43	0.094	0.1	0.004	6
WELL ID	DATE SAMPLED	METHOD												
MKTF-26			SPH Detected - No samples were collected.											
	06/09/16	200.7/200.8	0.0094	0.074	<0.002	<0.006	<0.006	0.48	0.00096	**0.7**	<0.005	0.033	**0.085**	0.004
	02/22/16	200.7/200.8	0.0024	0.12	<0.002	<0.006	<0.006	0.38	0.0013	**0.91**	<0.005	0.0031	**0.042**	0.048
	11/04/15	200.7/200.8	<0.005	0.14	<0.002	<0.006	<0.006	0.35	0.0011	**1**	<0.005	0.0075	**0.062**	<0.01
	08/20/15	200.7/200.8	<0.005	0.1	<0.002	<0.006	<0.006	0.57	<0.0025	**1.1**	<0.005	<0.005	**0.092**	<0.01
	06/10/15	200.7/200.8	<0.005	0.14	<0.002	<0.006	<0.006	0.86	<0.005	**1.2**	<0.005	<0.005	**0.063**	0.036
	03/11/15	200.7/200.8	*<0.01**	0.17	<0.002	<0.006	<0.006	0.85	<0.001	**1.4**	<0.005	<0.01	**0.045**	0.068
	11/14/14	200.7/200.8	*<0.01**	0.13	<0.002	<0.006	<0.006	0.18	<0.01	**1.4**	<0.005	<0.01	**0.066**	0.014
MKTF-27	10/23/19	200.7/200.8	0.0011	0.041	<0.002	<0.006	0.0068	0.017	<0.0025	0.048	0.0057	0.0019	NA	0.034
	08/21/19	200.7/200.8	0.0011	0.041	<0.002	<0.006	0.017	0.0089	<0.0025	**0.32**	0.0048	0.0028	**0.031**	0.008
	05/06/19	200.7/200.8	0.0011	0.04	<0.002	<0.006	0.0095	0.023	<0.0025	0.17	0.0093	0.0044	**0.031**	0.043
	03/28/19	200.7/200.8	**0.017**	0.039	<0.002	<0.006	0.011	0.12	<0.0025	0.011	0.0064	0.0049	0.025	0.019
	11/15/18	200.7/200.8	0.0017	0.063	<0.002	<0.006	0.0047	0.16	<0.0025	**0.21**	0.0052	<0.001	**0.031**	0.026
	08/20/18	200.7/200.8	0.0024	0.068	<0.002	<0.006	0.0052	<0.02	<0.0025	0.12	0.0064	<0.001	**0.033**	0.012
	05/01/18	200.7/200.8	0.005	0.091	<0.002	<0.006	0.0084	0.034	<0.005	0.033	0.0058	<0.005	**0.034**	0.0099
	02/06/18	200.7/200.8	**0.012**	0.061	<0.002	<0.006	0.0039	0.031	<0.01	0.032	0.0059	<0.02	**0.033**	0.0054
	11/20/17	200.7/200.8	<0.005	0.069	<0.002	<0.006	0.0047	0.1	<0.0025	**0.24**	0.0033	<0.005	**0.046**	0.0044
	10/03/17	200.7/200.8	0.0037	0.067	<0.002	<0.006	<0.006	0.018	<0.0025	0.17	<0.005	0.012	NA	0.033
	06/05/17	200.7/200.8	0.0033	0.071	<0.002	<0.006	<0.006	0.058	<0.0025	0.064	<0.005	0.011	**0.058**	0.018
	03/29/17	200.7/200.8	0.004	0.097	<0.002	<0.006	<0.006	0.034	<0.0025	**0.49**	<0.005	0.015	**0.077**	0.022
	10/28/16	200.7/200.8	0.0033	0.065	<0.002	<0.006	<0.006	0.039	<0.0025	0.085	<0.005	0.0095	**0.059**	<0.01
	09/07/16	200.7/200.8	0.003	0.067	<0.002	<0.006	<0.006	0.083	0.00063	**0.29**	<0.005	0.0092	**0.055**	0.0034
	06/08/16	200.7/200.8	0.0036	0.074	<0.002	<0.006	<0.006	0.4	0.0025	**0.52**	<0.005	0.014	**0.056**	0.007
	02/22/16	200.7/200.8	0.00096	0.063	<0.002	<0.006	<0.006	0.084	0.00041	0.12	<0.005	0.0039	**0.061**	0.012
	11/04/15	200.7/200.8	<0.005	0.078	<0.002	<0.006	<0.006	0.12	<0.005	**0.7**	<0.005	<0.02	**0.066**	<0.01
	08/20/15	200.7/200.8	<0.005	0.092	<0.002	<0.006	<0.006	**1.8**	<0.0025	**0.49**	<0.005	<0.01	**0.069**	<0.01
	06/09/15	200.7/200.8	<0.005	0.083	<0.002	<0.006	<0.006	0.56	<0.005	**0.35**	<0.005	0.0075	**0.067**	0.01
	03/11/15	200.7/200.8	*<0.01**	0.086	<0.002	<0.006	<0.006	0.15	<0.01	0.1	<0.005	0.014	**0.075**	<0.01
	11/14/14	200.7/200.8	*<0.01**	0.094	<0.002	<0.006	<0.006	0.55	<0.01	**0.28**	<0.005	<0.01	**0.075**	0.03

8.17.3 MKTF WELLS

Dissolved Metals Analytical Result Summary

			PARAMETERS											
STANDARDS			Arsenic (mg/L)	Barium (mg/L)	Cadmium (mg/L)	Chromium (mg/L)	Copper (mg/L)	Iron (mg/L)	Lead (mg/L)	Manganese (mg/L)	Silver (mg/L)	Selenium (mg/L)	Uranium (mg/L)	Zinc (mg/L)
WQCC 20 NMAC 6.2.3103 (DEC 2018)			**0.01**	**2**	**0.005**	**0.05**	**1**	**1**	**0.015**	**0.2**	**0.05**	**0.05**	**0.03**	**10**
40 CFR 141.62 MCL			0.01	2	0.005	0.1	1.3	NE	0.015	NE	NE	0.05	0.03	NE
NMED Tap Water (JUNE 2019)			0.000855	3.28	0.00624	0.0057	0.7898	13.8	NE	2.02	0.0812	0.0987	0.0592	5.96
EPA RSL for Tap Water (NOVEMBER 2019)			0.000052	3.8	0.0092	NE	0.8	14	0.015	0.43	0.094	0.1	0.004	6
WELL ID	DATE SAMPLED	METHOD												
MKTF-28	10/22/19	200.7/200.8	0.0013	0.051	<0.002	<0.006	<0.006	0.023	<0.0025	0.037	0.0013	<0.005	NA	0.023
	08/21/19	200.7/200.8	0.0011	0.052	<0.002	<0.006	0.0045	<0.02	<0.0005	0.023	0.0011	0.001	**0.12**	0.0051
	05/06/19	200.7/200.8	0.0011	0.04	<0.002	<0.006	0.0095	0.023	<0.0025	0.17	0.0093	0.0044	**0.031**	0.043
	03/28/19	200.7/200.8	0.0011	0.051	<0.002	<0.006	<0.006	0.022	<0.005	0.0036	<0.005	0.00044	**0.13**	0.052
	11/15/18	200.7/200.8	0.0012	0.048	<0.002	<0.006	0.0053	<0.02	<0.0005	0.0011	<0.005	<0.001	**0.13**	0.016
	08/20/18	200.7/200.8	0.0015	0.034	<0.002	<0.006	<0.006	0.031	<0.0005	0.0046	<0.005	<0.001	**0.15**	0.0088
	05/01/18	200.7/200.8	0.0015	0.046	<0.002	<0.006	<0.006	0.027	<0.0005	0.0024	<0.005	<0.001	**0.14**	0.0076
	02/06/18	200.7/200.8	0.0042	0.051	<0.002	<0.006	<0.006	0.034	<0.0005	0.0032	<0.005	<0.005	**0.13**	0.0076
	11/20/17	200.7/200.8	*<0.01**	0.087	<0.002	<0.006	0.0053	**2.9**	0.0029	0.18	<0.005	<0.01	**0.15**	0.0066
	10/03/17	200.7/200.8	0.0042	0.049	<0.002	0.0016	<0.006	<0.02	<0.0005	0.0017	<0.005	0.015	NA	0.049
	06/05/17	200.7/200.8	0.004	0.046	<0.002	<0.006	0.01	0.023	<0.0005	0.0023	<0.005	0.0086	**0.13**	0.019
	03/29/17	200.7/200.8	0.0029	0.049	<0.002	<0.006	<0.006	0.11	0.00042	0.011	<0.005	0.0081	**0.16**	0.016
	10/28/16	200.7/200.8	0.0047	0.061	<0.002	<0.006	<0.006	0.049	0.00022	0.021	<0.005	0.012	**0.16**	<0.01
	09/08/16	200.7/200.8	0.0039	0.061	<0.002	<0.006	<0.006	0.12	0.00087	0.031	<0.005	0.012	**0.14**	<0.01
	06/08/16	200.7/200.8	0.0054	0.074	<0.002	<0.006	<0.006	0.14	0.00076	0.022	<0.005	0.015	**0.15**	0.012
	02/23/16	200.7/200.8	0.0026	0.069	<0.002	<0.006	<0.006	0.064	0.00039	0.016	<0.005	0.0061	**0.16**	0.027
	11/04/15	200.7/200.8	*<0.01**	0.08	<0.002	<0.006	<0.006	0.081	<0.0005	0.088	<0.005	*<0.05**	**0.15**	<0.01
	08/20/15	200.7/200.8	<0.005	0.082	<0.002	<0.006	<0.006	0.19	<0.0025	0.018	<0.005	0.0081	**0.15**	<0.01
	06/09/15	200.7/200.8	<0.005	0.087	<0.002	<0.006	<0.006	0.062	<0.005	0.0054	<0.005	0.012	**0.16**	0.031
	03/11/15	200.7/200.8	*<0.01**	0.09	<0.002	<0.006	<0.006	0.075	<0.001	0.0057	<0.005	*<0.05**	**0.17**	<0.01
	11/14/14	200.7/200.8	<0.005	0.099	<0.002	<0.006	<0.006	0.63	<0.005	**0.32**	<0.005	<0.02	**0.12**	0.038

8.17.3 MKTF WELLS

Dissolved Metals Analytical Result Summary

			PARAMETERS											
STANDARDS			Arsenic (mg/L)	Barium (mg/L)	Cadmium (mg/L)	Chromium (mg/L)	Copper (mg/L)	Iron (mg/L)	Lead (mg/L)	Manganese (mg/L)	Silver (mg/L)	Selenium (mg/L)	Uranium (mg/L)	Zinc (mg/L)
WQCC 20 NMAC 6.2.3103 (DEC 2018)			**0.01**	**2**	**0.005**	**0.05**	**1**	**1**	**0.015**	**0.2**	**0.05**	**0.05**	**0.03**	**10**
40 CFR 141.62 MCL			0.01	2	0.005	0.1	1.3	NE	0.015	NE	NE	0.05	0.03	NE
NMED Tap Water (JUNE 2019)			0.000855	3.28	0.00624	0.0057	0.7898	13.8	NE	2.02	0.0812	0.0987	0.0592	5.96
EPA RSL for Tap Water (NOVEMBER 2019)			0.000052	3.8	0.0092	NE	0.8	14	0.015	0.43	0.094	0.1	0.004	6
WELL ID	DATE SAMPLED	METHOD												
MKTF-29	10/22/19	200.7/200.8	0.0011	0.092	<0.002	<0.006	0.0057	0.66	<0.0025	**2.1**	0.0034	<0.005	NA	0.0069
	08/23/19	200.7/200.8	0.001	0.038	<0.002	<0.006	0.0029	0.0092	<0.0005	**1.1**	0.0017	0.00026	0.0063	0.0081
	05/06/19	200.7/200.8	0.0013	0.043	<0.002	<0.006	<0.006	0.029	<0.0025	0.004	0.002	<0.005	**0.14**	0.025
	03/28/19	200.7/200.8	0.001	0.026	<0.002	<0.006	<0.006	0.02	<0.005	**0.59**	0.0016	0.00018	0.0076	0.03
	11/15/18	200.7/200.8	0.001	0.028	<0.002	<0.006	0.0049	<0.02	<0.0005	**0.48**	0.0021	<0.001	0.0077	0.03
	08/20/18	200.7/200.8	0.0012	0.026	<0.002	<0.006	0.0038	0.053	<0.0005	**0.48**	0.002	<0.001	0.0082	0.0076
	05/01/18	200.7/200.8	0.0015	0.021	<0.002	<0.006	<0.006	0.03	<0.0005	**0.38**	<0.005	<0.001	0.0079	0.0048
	02/06/18	200.7/200.8	0.0036	0.024	<0.002	<0.006	<0.006	0.031	<0.0005	**0.49**	0.0023	<0.005	0.0094	0.0063
	11/20/17	200.7/200.8	<0.005	0.031	<0.002	<0.006	<0.006	0.036	<0.0005	**0.71**	<0.005	<0.005	0.0092	0.0034
	10/03/17	200.7/200.8	0.0017	0.031	<0.002	<0.006	<0.006	0.022	<0.0005	**0.62**	<0.005	0.0029	NA	0.064
	06/05/17	200.7/200.8	0.0017	0.031	<0.002	<0.006	<0.006	0.029	<0.0005	**0.53**	<0.005	0.003	0.011	0.014
	03/29/17	200.7/200.8	0.0019	0.032	<0.002	<0.006	0.0053	0.034	0.00017	**0.35**	<0.005	0.0038	0.012	0.021
	10/28/16	200.7/200.8	0.0016	0.027	<0.002	<0.006	<0.006	<0.02	<0.0005	**0.39**	<0.005	0.0026	0.013	0.013
	09/07/16	200.7/200.8	0.0018	0.037	<0.002	<0.006	<0.006	0.073	0.0021	**0.62**	<0.005	0.0023	0.012	<0.01
	06/09/16	200.7/200.8	0.0021	0.028	<0.002	<0.006	<0.006	0.022	<0.0005	**0.39**	<0.005	0.0039	0.013	<0.01
	02/23/16	200.7/200.8	0.0012	0.032	<0.002	<0.006	<0.006	0.059	0.000097	**0.5**	<0.005	0.0013	0.015	0.012
	11/04/15	200.7/200.8	0.0022	0.041	<0.002	<0.006	<0.006	0.036	<0.005	**0.55**	<0.005	0.0035	0.016	<0.01
	08/20/15	200.7/200.8	<0.005	0.041	<0.002	<0.006	<0.006	0.073	<0.0025	**0.49**	<0.005	<0.005	0.018	<0.01
	06/10/15	200.7/200.8	<0.005	0.035	<0.002	<0.006	<0.006	0.049	<0.005	**0.36**	<0.005	<0.005	0.019	0.025
	03/11/15	200.7/200.8	0.0024	0.031	<0.002	<0.006	<0.006	<0.02	<0.001	**0.34**	<0.005	0.0045	0.023	<0.01

8.17.3 MKTF WELLS

Dissolved Metals Analytical Result Summary

			PARAMETERS											
STANDARDS			Arsenic (mg/L)	Barium (mg/L)	Cadmium (mg/L)	Chromium (mg/L)	Copper (mg/L)	Iron (mg/L)	Lead (mg/L)	Manganese (mg/L)	Silver (mg/L)	Selenium (mg/L)	Uranium (mg/L)	Zinc (mg/L)
WQCC 20 NMAC 6.2.3103 (DEC 2018)			**0.01**	**2**	**0.005**	**0.05**	**1**	**1**	**0.015**	**0.2**	**0.05**	**0.05**	**0.03**	**10**
40 CFR 141.62 MCL			0.01	2	0.005	0.1	1.3	NE	0.015	NE	NE	0.05	0.03	NE
NMED Tap Water (JUNE 2019)			0.000855	3.28	0.00624	0.0057	0.7898	13.8	NE	2.02	0.0812	0.0987	0.0592	5.96
EPA RSL for Tap Water (NOVEMBER 2019)			0.000052	3.8	0.0092	NE	0.8	14	0.015	0.43	0.094	0.1	0.004	6
WELL ID	DATE SAMPLED	METHOD												
MKTF-30	10/23/19	200.7/200.8	0.00079	0.032	<0.002	<0.006	<0.006	0.013	<0.0005	0.0013	0.0015	<0.005	NA	0.015
	08/23/19	200.7/200.8	0.00056	0.033	<0.002	<0.006	0.0035	<0.02	<0.0005	0.0014	<0.005	0.00057	**0.034**	0.0046
	05/06/19	200.7/200.8	0.00056	0.02	<0.002	<0.006	<0.006	0.012	<0.0025	0.0099	0.0029	<0.005	**0.035**	0.026
	03/28/19	200.7/200.8	0.00065	0.026	<0.002	<0.006	<0.006	0.043	0.00011	0.0065	0.00098	0.0004	**0.034**	0.024
	11/15/18	200.7/200.8	0.00056	0.03	<0.002	<0.006	<0.006	<0.02	<0.0005	0.013	<0.005	<0.001	0.025	0.035
	08/20/18	200.7/200.8	0.00073	0.032	<0.002	<0.006	<0.006	<0.02	<0.0005	0.015	0.0021	<0.001	0.03	0.013
	05/01/18	200.7/200.8	<0.005	0.016	<0.002	<0.006	<0.006	0.044	<0.0005	0.005	<0.005	<0.005	**0.035**	0.0054
	02/06/18	200.7/200.8	0.0035	0.027	<0.002	<0.006	<0.006	0.047	<0.0005	0.013	<0.005	<0.005	0.03	0.0069
	11/20/17	200.7/200.8	<0.005	0.032	<0.002	<0.006	<0.006	<0.02	<0.0005	0.0081	<0.005	<0.005	0.029	0.005
	10/03/17	200.7/200.8	0.0026	0.033	<0.002	<0.006	<0.006	0.051	0.00018	0.017	<0.005	0.0042	NA	0.019
	06/05/17	200.7/200.8	0.0015	0.026	<0.002	<0.006	<0.006	0.024	<0.0005	0.017	<0.005	0.0044	**0.039**	0.014
	03/29/17	200.7/200.8	0.0013	0.039	<0.002	<0.006	<0.006	0.087	0.00037	0.044	<0.005	0.0055	**0.033**	0.021
	10/28/16	200.7/200.8	0.0027	0.046	<0.002	<0.006	<0.006	<0.02	<0.0005	0.0031	<0.005	0.0077	0.029	<0.01
	09/07/16	200.7/200.8	0.0026	0.046	<0.002	<0.006	<0.006	<0.02	0.022	0.053	<0.005	0.0076	0.026	0.0048
	06/09/16	200.7/200.8	0.0041	0.04	<0.002	<0.006	<0.006	0.016	<0.0005	0.0075	<0.005	0.013	**0.034**	<0.01
	02/23/16	200.7/200.8	<0.005	0.046	<0.002	<0.006	<0.006	0.057	0.00036	0.017	<0.005	0.0042	0.029	0.011
	11/04/15	200.7/200.8	<0.005	0.048	<0.002	<0.006	<0.006	0.036	<0.005	0.008	<0.005	0.01	0.024	<0.01
	08/20/15	200.7/200.8	<0.005	0.071	<0.002	<0.006	<0.006	**2.4**	<0.0025	0.14	<0.005	<0.01	0.028	<0.01
	06/10/15	200.7/200.8	<0.005	0.05	<0.002	<0.006	<0.006	0.58	<0.005	0.089	<0.005	0.0065	**0.033**	<0.01
	03/11/15	200.7/200.8	*<0.01**	0.036	<0.002	<0.006	<0.006	0.19	<0.01	0.018	<0.005	0.014	**0.041**	<0.01
	11/17/14	200.7/200.8	*<0.01**	0.036	<0.002	<0.006	<0.006	0.26	<0.001	0.021	<0.005	<0.01	**0.041**	0.039

8.17.3 MKTF WELLS

Dissolved Metals Analytical Result Summary

			PARAMETERS											
STANDARDS			Arsenic (mg/L)	Barium (mg/L)	Cadmium (mg/L)	Chromium (mg/L)	Copper (mg/L)	Iron (mg/L)	Lead (mg/L)	Manganese (mg/L)	Silver (mg/L)	Selenium (mg/L)	Uranium (mg/L)	Zinc (mg/L)
WQCC 20 NMAC 6.2.3103 (DEC 2018)			**0.01**	**2**	**0.005**	**0.05**	**1**	**1**	**0.015**	**0.2**	**0.05**	**0.05**	**0.03**	**10**
40 CFR 141.62 MCL			0.01	2	0.005	0.1	1.3	NE	0.015	NE	NE	0.05	0.03	NE
NMED Tap Water (JUNE 2019)			0.000855	3.28	0.00624	0.0057	0.7898	13.8	NE	2.02	0.0812	0.0987	0.0592	5.96
EPA RSL for Tap Water (NOVEMBER 2019)			0.000052	3.8	0.0092	NE	0.8	14	0.015	0.43	0.094	0.1	0.004	6
WELL ID	DATE SAMPLED	METHOD												
MKTF-31	10/22/19	200.7/200.8	0.00066	0.13	<0.002	<0.006	<0.006	<0.02	<0.0005	0.015	0.0033	<0.005	NA	0.014
	08/23/19	200.7/200.8	0.00064	0.13	<0.002	<0.006	0.0019	0.027	0.000089	0.021	0.0024	0.00036	**0.042**	0.0042
	05/06/19	200.7/200.8	0.00095	0.17	<0.002	<0.006	<0.006	<0.02	<0.0025	0.011	0.0056	<0.005	**0.047**	0.048
	02/20/19	200.7/200.8	0.00059	0.14	<0.002	<0.006	0.0075	<0.02	0.000076	0.017	0.0031	<0.001	**0.041**	0.019
	11/15/18	200.7/200.8	0.00062	0.14	<0.002	<0.006	<0.006	0.019	<0.0005	0.051	0.0033	<0.001	**0.035**	0.02
	08/17/18	200.7/200.8	0.001	0.13	<0.002	<0.006	<0.006	<0.02	<0.0005	0.065	0.0035	<0.001	**0.04**	0.011
	05/06/18	200.7/200.8	0.0012	0.11	<0.002	<0.006	<0.006	0.036	<0.0005	0.03	0.0052	<0.001	**0.038**	0.0037
	02/05/18	200.7/200.8	0.0032	0.12	<0.002	<0.006	<0.006	<0.02	<0.0005	0.028	0.0035	0.0056	**0.039**	0.0052
	11/21/17	200.7/200.8	<0.005	0.12	<0.002	<0.006	<0.006	0.026	<0.0005	0.025	0.0023	<0.005	**0.04**	<0.01
	09/25/17	200.7/200.8	0.0025	0.12	<0.002	<0.006	<0.006	<0.02	<0.0005	0.029	<0.005	0.0062	NA	0.012
	06/05/17	200.7/200.8	0.0025	0.14	<0.002	<0.006	<0.006	<0.02	<0.0005	0.013	<0.005	0.0072	**0.046**	0.012
	03/07/17	200.7/200.8	0.0026	0.17	<0.002	<0.006	<0.006	<0.02	<0.0005	0.022	<0.005	0.0078	NA	0.018
	10/31/16	200.7/200.8	0.0026	0.13	<0.002	<0.006	<0.006	0.02	<0.0005	0.018	<0.005	0.01	**0.043**	<0.01
	09/08/16	200.7/200.8	0.0021	0.14	<0.002	<0.006	<0.006	<0.02	0.00084	0.035	<0.005	0.0068	**0.04**	<0.01
	06/09/16	200.7/200.8	0.0043	0.14	<0.002	<0.006	<0.006	0.013	<0.0005	0.018	<0.005	0.014	**0.046**	<0.01
	02/23/16	200.7/200.8	0.0014	0.12	<0.002	<0.006	<0.006	0.011	0.000084	0.02	<0.005	0.0036	**0.046**	0.01
	11/04/15	200.7/200.8	<0.005	0.14	<0.002	<0.006	<0.006	<0.02	<0.005	0.033	<0.005	0.0085	**0.042**	<0.01
	08/21/15	200.7/200.8	<0.005	0.14	<0.002	<0.006	<0.006	<0.02	<0.0005	0.035	<0.005	<0.01	**0.047**	<0.01
	06/10/15	200.7/200.8	<0.005	0.13	<0.002	<0.006	<0.006	0.021	<0.005	0.026	<0.005	0.0058	**0.048**	0.032
	03/11/15	200.7/200.8	*<0.01**	0.17	<0.002	<0.006	<0.006	0.026	<0.001	0.032	<0.005	0.013	**0.054**	<0.01
	11/17/14	200.7/200.8	<0.005	0.17	<0.002	<0.006	<0.006	<0.02	<0.001	0.059	<0.005	0.0075	**0.045**	0.027

8.17.3 MKTF WELLS

Dissolved Metals Analytical Result Summary

			PARAMETERS											
STANDARDS			Arsenic (mg/L)	Barium (mg/L)	Cadmium (mg/L)	Chromium (mg/L)	Copper (mg/L)	Iron (mg/L)	Lead (mg/L)	Manganese (mg/L)	Silver (mg/L)	Selenium (mg/L)	Uranium (mg/L)	Zinc (mg/L)
WQCC 20 NMAC 6.2.3103 (DEC 2018)			**0.01**	**2**	**0.005**	**0.05**	**1**	**1**	**0.015**	**0.2**	**0.05**	**0.05**	**0.03**	**10**
40 CFR 141.62 MCL			0.01	2	0.005	0.1	1.3	NE	0.015	NE	NE	0.05	0.03	NE
NMED Tap Water (JUNE 2019)			0.000855	3.28	0.00624	0.0057	0.7898	13.8	NE	2.02	0.0812	0.0987	0.0592	5.96
EPA RSL for Tap Water (NOVEMBER 2019)			0.000052	3.8	0.0092	NE	0.8	14	0.015	0.43	0.094	0.1	0.004	6
WELL ID	DATE SAMPLED	METHOD												
MKTF-32	10/23/19	200.7/200.8	0.003	0.052	<0.002	<0.006	0.0043	0.059	0.00015	0.043	<0.005	<0.005	NA	0.0072
	08/20/19	200.7/200.8	0.002	0.053	<0.002	<0.006	0.0052	<0.02	0.000089	0.11	<0.005	0.00025	**0.056**	0.0045
	05/07/19	200.7/200.8	0.002	0.045	<0.002	<0.006	0.0026	0.023	<0.0025	0.071	<0.005	0.0027	**0.053**	0.041
	02/13/19	200.7/200.8	0.0021	0.047	<0.002	<0.006	0.0045	<0.02	0.00011	0.059	<0.005	0.00043	**0.058**	0.027
	11/15/18	200.7/200.8	0.0022	0.043	<0.002	<0.006	0.0046	<0.02	<0.0005	0.045	<0.005	<0.001	**0.055**	0.023
	08/28/18	200.7/200.8	0.0025	0.051	<0.002	<0.006	0.0045	0.022	<0.0005	0.037	<0.005	<0.001	**0.055**	0.0076
	05/09/18	200.7/200.8	0.0026	0.045	<0.002	<0.006	0.0039	<0.02	<0.0025	0.049	<0.005	<0.005	**0.05**	0.0092
	02/07/18	200.7/200.8	<0.005	0.052	<0.002	<0.006	<0.006	0.031	<0.0005	0.062	<0.005	<0.005	**0.06**	0.0068
	11/27/17	200.7/200.8	0.0033	0.049	<0.002	<0.006	<0.006	0.043	<0.0025	0.078	<0.005	<0.005	**0.055**	<0.01
	09/25/17	200.7/200.8	0.0036	0.045	<0.002	<0.006	<0.006	0.023	<0.0005	0.075	<0.005	0.005	NA	0.0087
	06/06/17	200.7/200.8	0.0041	0.049	<0.002	<0.006	<0.006	0.086	0.00035	0.05	<0.005	0.005	**0.059**	0.011
	03/07/17	200.7/200.8	0.0039	0.043	<0.002	<0.006	<0.006	<0.02	<0.0005	0.065	<0.005	0.0059	NA	0.029
	10/31/16	200.7/200.8	0.004	0.051	<0.002	<0.006	<0.006	0.05	<0.0025	0.056	<0.005	0.0069	**0.059**	0.0096
	09/09/16	200.7/200.8	0.0038	0.05	<0.002	<0.006	<0.006	0.027	0.00031	0.074	<0.005	0.0072	**0.059**	0.0095
	06/09/16	200.7/200.8	0.0057	0.064	<0.002	<0.006	<0.006	0.099	0.00057	0.082	<0.005	0.012	**0.064**	<0.01
	02/24/16	200.7/200.8	0.0029	0.049	<0.002	<0.006	<0.006	0.023	0.00024	0.062	<0.005	0.0034	**0.063**	0.012
	11/05/15	200.7/200.8	<0.005	0.054	<0.002	<0.006	<0.006	0.064	<0.0005	0.076	<0.005	0.0081	**0.059**	<0.01
	08/21/15	200.7/200.8	<0.005	0.077	<0.002	<0.006	<0.006	0.57	0.00051	0.06	<0.005	<0.01	**0.067**	<0.01
	06/09/15	200.7/200.8	<0.005	0.057	<0.002	<0.006	<0.006	0.058	<0.005	0.082	<0.005	<0.005	**0.066**	0.016
	03/12/15	200.7/200.8	*<0.01**	0.057	<0.002	<0.006	<0.006	0.18	<0.001	0.08	<0.005	<0.02	**0.068**	0.014
	11/17/14	200.7/200.8	<0.005	0.064	<0.002	<0.006	<0.006	0.21	<0.001	0.094	<0.005	<0.01	**0.059**	0.01

8.17.3 MKTF WELLS

Dissolved Metals Analytical Result Summary

			PARAMETERS											
STANDARDS			Arsenic (mg/L)	Barium (mg/L)	Cadmium (mg/L)	Chromium (mg/L)	Copper (mg/L)	Iron (mg/L)	Lead (mg/L)	Manganese (mg/L)	Silver (mg/L)	Selenium (mg/L)	Uranium (mg/L)	Zinc (mg/L)
WQCC 20 NMAC 6.2.3103 (DEC 2018)			**0.01**	**2**	**0.005**	**0.05**	**1**	**1**	**0.015**	**0.2**	**0.05**	**0.05**	**0.03**	**10**
40 CFR 141.62 MCL			0.01	2	0.005	0.1	1.3	NE	0.015	NE	NE	0.05	0.03	NE
NMED Tap Water (JUNE 2019)			0.000855	3.28	0.00624	0.0057	0.7898	13.8	NE	2.02	0.0812	0.0987	0.0592	5.96
EPA RSL for Tap Water (NOVEMBER 2019)			0.000052	3.8	0.0092	NE	0.8	14	0.015	0.43	0.094	0.1	0.004	6
WELL ID	DATE SAMPLED	METHOD												
MKTF-33	10/24/19	200.7/200.8	0.00062	0.076	<0.002	<0.006	0.0041	0.052	<0.0005	**0.38**	0.0019	0.00018	NA	0.017
	08/20/19	200.7/200.8	0.00042	0.069	<0.002	<0.006	<0.006	0.12	<0.0005	**0.44**	0.0012	<0.001	**0.033**	0.004
	05/09/19	200.7/200.8	0.00055	0.053	<0.002	<0.006	<0.006	0.016	<0.0025	0.081	<0.005	<0.005	**0.032**	0.031
	03/26/19	200.7/200.8	0.00063	0.074	<0.002	<0.006	<0.006	0.11	0.000072	**0.37**	0.0012	<0.001	**0.034**	0.038
	11/28/18	200.7/200.8	0.00049	0.055	<0.002	<0.006	<0.006	0.03	<0.0005	**0.28**	<0.005	<0.001	NA	0.032
	08/30/18	200.7/200.8	0.00075	0.045	<0.002	<0.006	<0.006	<0.02	<0.0005	0.16	<0.005	<0.001	**0.031**	0.01
	05/10/18	200.7/200.8	0.00076	0.042	<0.002	<0.006	<0.006	<0.02	<0.0025	0.15	<0.005	<0.005	**0.032**	0.0069
	02/08/18	200.7/200.8	<0.001	0.04	<0.002	<0.006	<0.006	<0.02	<0.0005	**0.26**	0.0025	<0.005	**0.036**	0.007
	11/28/17	200.7/200.8	0.00071	0.04	<0.002	<0.006	<0.006	<0.02	<0.0005	**0.28**	<0.005	<0.005	**0.032**	0.0051
	09/25/17	200.7/200.8	<0.005	0.037	<0.002	<0.006	<0.006	<0.02	<0.0005	0.19	<0.005	0.002	NA	0.014
	06/08/17	200.7/200.8	0.0011	0.04	<0.002	<0.006	<0.006	0.029	0.00019	0.042	<0.005	0.0023	**0.035**	0.012
	03/08/17	200.7/200.8	0.0014	0.04	<0.002	<0.006	<0.006	0.032	0.00025	0.2	<0.005	0.0028	NA	0.029
	11/01/16	200.7/200.8	0.0011	0.041	<0.002	<0.006	<0.006	<0.02	<0.0005	0.13	<0.005	0.0028	**0.038**	0.017
	09/10/16	200.7/200.8	0.0011	0.043	<0.002	<0.006	<0.006	0.02	0.00023	0.13	<0.005	0.0035	**0.037**	<0.01
	06/10/16	200.7/200.8	0.0017	0.04	<0.002	<0.006	<0.006	0.014	<0.0005	0.031	<0.005	0.004	**0.038**	0.011
	02/25/16	200.7/200.8	0.00079	0.047	<0.002	<0.006	<0.006	0.045	0.00011	0.16	<0.005	0.0018	**0.04**	0.017
	11/09/15	200.7/200.8	<0.005	0.062	<0.002	<0.006	<0.006	0.071	0.00059	**0.24**	<0.005	<0.005	**0.04**	<0.01
	08/21/15	200.7/200.8	<0.005	0.054	<0.002	<0.006	<0.006	<0.02	<0.0005	**0.28**	<0.005	0.0024	**0.042**	<0.01
	06/09/15	200.7/200.8	<0.005	0.055	<0.002	<0.006	<0.006	<0.02	<0.002	0.14	<0.005	<0.005	**0.044**	0.028
	03/12/15	200.7/200.8	*<0.01**	0.061	<0.002	<0.006	<0.006	0.026	<0.001	**0.28**	<0.005	<0.01	**0.045**	0.017
	11/17/14	200.7/200.8	<0.005	0.064	<0.002	<0.006	<0.006	0.061	<0.001	**0.24**	<0.005	<0.005	**0.045**	0.016

8.17.3 MKTF WELLS

Dissolved Metals Analytical Result Summary

			PARAMETERS											
STANDARDS			Arsenic (mg/L)	Barium (mg/L)	Cadmium (mg/L)	Chromium (mg/L)	Copper (mg/L)	Iron (mg/L)	Lead (mg/L)	Manganese (mg/L)	Silver (mg/L)	Selenium (mg/L)	Uranium (mg/L)	Zinc (mg/L)
WQCC 20 NMAC 6.2.3103 (DEC 2018)			**0.01**	**2**	**0.005**	**0.05**	**1**	**1**	**0.015**	**0.2**	**0.05**	**0.05**	**0.03**	**10**
40 CFR 141.62 MCL			0.01	2	0.005	0.1	1.3	NE	0.015	NE	NE	0.05	0.03	NE
NMED Tap Water (JUNE 2019)			0.000855	3.28	0.00624	0.0057	0.7898	13.8	NE	2.02	0.0812	0.0987	0.0592	5.96
EPA RSL for Tap Water (NOVEMBER 2019)			0.000052	3.8	0.0092	NE	0.8	14	0.015	0.43	0.094	0.1	0.004	6
WELL ID	DATE SAMPLED	METHOD												
MKTF-34	10/29/19	200.7/200.8	0.00053	0.12	<0.002	<0.006	<0.006	<0.02	0.001	0.00044	0.0024	0.0044	NA	0.028
	08/19/19	200.7/200.8	0.00044	0.14	<0.002	<0.006	0.0026	<0.02	<0.0005	<0.002	0.003	0.0014	0.019	0.0085
	05/09/19	200.7/200.8	0.00065	0.23	<0.002	<0.006	<0.006	0.021	<0.0025	0.00082	0.002	<0.005	0.015	0.012
	03/26/19	200.7/200.8	0.00025	0.35	<0.002	<0.006	<0.006	<0.02	<0.0005	0.00062	0.005	0.0007	0.011	0.032
	11/28/18	200.7/200.8	0.00087	0.035	<0.002	<0.006	<0.006	<0.02	<0.0005	0.0004	<0.005	0.0022	**0.036**	0.026
	08/24/18	200.7/2008	0.0011	0.045	<0.002	<0.006	<0.006	<0.02	<0.0005	<0.002	<0.005	0.0025	**0.036**	0.0094
	05/04/18	200.7/200.8	0.0011	0.05	<0.002	<0.006	<0.006	<0.02	<0.0005	0.00041	<0.005	0.0025	**0.036**	0.0061
	02/16/18	200.7/200.8	0.0026	0.049	<0.002	<0.006	<0.006	<0.02	<0.0005	0.0025	<0.005	0.0067	**0.035**	0.0083
	12/01/17	200.7/200.8	<0.005	0.063	<0.002	<0.006	<0.006	<0.02	<0.0025	<0.002	<0.005	<0.005	**0.036**	0.0082
	09/26/17	200.7/200.8	0.0025	0.06	<0.002	0.0015	<0.006	<0.02	<0.0005	0.00062	<0.005	<0.02	NA	0.034
	06/14/17	200.7/200.8	0.0015	0.072	<0.002	<0.006	0.019	0.033	<0.0005	0.00099	<0.005	<0.02	NA	0.01
	03/01/17	200.7/200.8	0.0025	0.079	<0.002	<0.006	<0.006	<0.02	<0.0005	0.00076	<0.005	0.0045	NA	0.028
	11/08/16	200.7/200.8	0.003	0.057	<0.002	<0.006	<0.006	<0.02	<0.0005	0.00035	<0.005	0.0077	**0.036**	0.0031
	09/13/16	200.7/200.8	0.0042	0.11	<0.002	<0.006	<0.006	<0.02	<0.0005	0.00053	<0.005	0.016	**0.037**	0.0032
	06/10/16	200.7/200.8	0.0046	0.1	<0.002	<0.006	<0.006	0.041	<0.0025	0.0017	<0.005	0.018	0.03	0.0037
	02/25/16	200.7/200.8	0.0032	0.13	<0.002	<0.006	<0.006	0.017	0.00013	0.001	<0.005	0.01	0.03	0.012
	01/03/15	200.7/200.8	<0.005	0.12	<0.002	<0.006	<0.006	<0.02	<0.0005	<0.002	<0.005	<0.02	0.027	<0.01
	08/18/15	200.7/200.8	*<0.01**	0.13	<0.002	<0.006	<0.006	<0.02	<0.0025	<0.002	<0.005	<0.01	0.027	<0.01
	06/08/15	200.7/200.8	<0.005	0.14	<0.002	<0.006	<0.006	0.11	<0.002	0.0059	<0.005	<0.01	0.029	0.018
	03/12/15	200.7/200.8	*<0.01**	0.12	<0.002	<0.006	<0.006	0.21	<0.001	0.013	<0.005	*<0.05**	0.025	<0.01
	11/17/14	200.7/200.8	*<0.01**	0.15	<0.002	<0.006	<0.006	<0.02	<0.001	0.0041	<0.005	<0.02	0.027	0.051

8.17.3 MKTF WELLS

Dissolved Metals Analytical Result Summary

			PARAMETERS											
STANDARDS			Arsenic (mg/L)	Barium (mg/L)	Cadmium (mg/L)	Chromium (mg/L)	Copper (mg/L)	Iron (mg/L)	Lead (mg/L)	Manganese (mg/L)	Silver (mg/L)	Selenium (mg/L)	Uranium (mg/L)	Zinc (mg/L)
WQCC 20 NMAC 6.2.3103 (DEC 2018)			**0.01**	**2**	**0.005**	**0.05**	**1**	**1**	**0.015**	**0.2**	**0.05**	**0.05**	**0.03**	**10**
40 CFR 141.62 MCL			0.01	2	0.005	0.1	1.3	NE	0.015	NE	NE	0.05	0.03	NE
NMED Tap Water (JUNE 2019)			0.000855	3.28	0.00624	0.0057	0.7898	13.8	NE	2.02	0.0812	0.0987	0.0592	5.96
EPA RSL for Tap Water (NOVEMBER 2019)			0.000052	3.8	0.0092	NE	0.8	14	0.015	0.43	0.094	0.1	0.004	6
WELL ID	DATE SAMPLED	METHOD												
MKTF-35	10/29/19	200.7/200.8	0.00043	0.48	<0.002	<0.006	<0.006	**3.4**	0.00014	**2.9**	0.0033	0.00018	NA	0.018
	08/19/19	200.7/200.8	0.0014	0.51	<0.002	<0.006	0.0014	**3.1**	0.000089	**2.8**	0.0026	<0.001	0.0074	0.0091
	05/16/19	200.7/200.8	0.0004	0.38	<0.002	<0.006	0.0039	**3.6**	0.00031	**3.3**	0.0026	<0.001	0.0032	0.018
	03/26/19	200.7/200.8	0.00027	0.35	<0.002	<0.006	<0.006	**3.6**	0.00024	**3.1**	0.0019	<0.001	0.0029	0.023
	11/28/18	200.7/200.8	<0.001	0.31	<0.002	<0.006	<0.006	**3.2**	<0.0005	**3**	0.0025	<0.001	NA	0.044
	08/23/18	200.7/200.8	0.0011	0.37	<0.002	<0.006	<0.006	**2.9**	0.0002	**2.9**	0.0035	<0.001	0.0029	0.018
	05/03/18	200.7/200.8	0.0011	0.31	<0.002	<0.006	<0.006	**3.3**	0.00022	**3.3**	0.0022	<0.001	0.0028	0.0061
	02/15/18	200.7/2000.8	0.0023	0.26	<0.002	<0.006	<0.006	**3.2**	0.0002	**3.4**	0.0025	<0.01	0.0028	<0.05
	11/30/17	200.7/200.8	<0.005	0.29	<0.002	<0.006	<0.006	**2.9**	<0.0005	**3.1**	<0.005	<0.005	0.0024	<0.01
	09/27/17	200.7/200.8	0.002	0.31	<0.002	<0.006	<0.006	**3.3**	0.0003	**3.4**	<0.005	<0.02	NA	0.0067
	06/14/17	200.7/200.8	0.003	0.13	<0.002	<0.006	<0.006	**3.1**	0.00024	**3.1**	<0.005	<0.02	NA	0.0095
	03/01/17	200.7/200.8	0.00072	0.06	<0.002	<0.006	<0.006	**3.1**	<0.0005	**3.3**	<0.005	0.004	NA	0.023
	11/03/16	200.7/200.8	0.00081	0.23	<0.002	<0.006	<0.006	**3**	0.00032	**2.9**	<0.005	0.0014	0.00075	<0.01
	09/13/16	200.7/200.8	0.00089	0.17	<0.002	<0.006	<0.006	**2.7**	<0.0005	**3.1**	<0.005	0.0026	0.001	0.0032
	06/10/16	200.7/200.8	0.00061	0.37	<0.002	<0.006	<0.006	**2.5**	<0.0005	**2.7**	<0.005	0.0023	0.0011	<0.01
	02/26/16	200.7/200.8	0.00046	0.43	<0.002	<0.006	<0.006	**2.8**	0.00037	**3**	<0.005	0.00089	0.0016	0.0099
	11/03/15	200.7/200.8	<0.005	0.57	<0.002	<0.006	<0.006	**2.6**	<0.0005	**3**	<0.005	0.0035	0.0019	<0.01
	08/18/15	200.7/200.8	*<0.01**	0.96	<0.002	<0.006	<0.006	**2.8**	<0.0025	**2.9**	<0.005	<0.01	<0.0025	<0.01
	06/04/15	200.7/200.8	<0.005	0.36	<0.002	<0.006	<0.006	**2.6**	<0.005	**3.1**	<0.005	<0.005	<0.005	0.017
	03/17/15	200.7/200.8	*<0.01**	0.31	<0.002	<0.006	<0.006	**3.6**	0.0011	**3.5**	<0.005	<0.01	0.0026	<0.01

8.17.3 MKTF WELLS

Dissolved Metals Analytical Result Summary

			PARAMETERS											
STANDARDS			Arsenic (mg/L)	Barium (mg/L)	Cadmium (mg/L)	Chromium (mg/L)	Copper (mg/L)	Iron (mg/L)	Lead (mg/L)	Manganese (mg/L)	Silver (mg/L)	Selenium (mg/L)	Uranium (mg/L)	Zinc (mg/L)
WQCC 20 NMAC 6.2.3103 (DEC 2018)			**0.01**	**2**	**0.005**	**0.05**	**1**	**1**	**0.015**	**0.2**	**0.05**	**0.05**	**0.03**	**10**
40 CFR 141.62 MCL			0.01	2	0.005	0.1	1.3	NE	0.015	NE	NE	0.05	0.03	NE
NMED Tap Water (JUNE 2019)			0.000855	3.28	0.00624	0.0057	0.7898	13.8	NE	2.02	0.0812	0.0987	0.0592	5.96
EPA RSL for Tap Water (NOVEMBER 2019)			0.000052	3.8	0.0092	NE	0.8	14	0.015	0.43	0.094	0.1	0.004	6
WELL ID	DATE SAMPLED	METHOD												
MKTF-36	11/06/19	--	SPH Detected - No samples were collected.											
	08/19/19	--	Well paved over and inaccessible - no samples were collected											
	05/14/19	--	Well paved over and inaccessible - no samples were collected											
	03/25/19	--	Well paved over and inaccessible - no samples were collected											
	11/29/18	--	Well paved over and inaccessible - no samples were collected											
	09/05/18	200.7/200.8	**0.015**	**5.9**	<0.002	<0.006	<0.006	**13**	0.0018	**1.7**	0.0024	<0.001	<0.0005	0.01
	05/03/18	200.7/200.8	**0.011**	**5.7**	<0.002	<0.006	<0.006	**12**	0.0016	**1.9**	<0.005	<0.001	0.00011	0.0096
	02/15/18	200.7/200.8	0.0085	**5.8**	<0.002	<0.006	<0.006	**14**	0.002	**1.9**	<0.005	0.0037	<0.0005	0.006
	11/30/17	200.7/200.8	**0.011**	**5.7**	<0.002	<0.006	<0.006	**13**	0.002	**1.7**	<0.005	<0.005	0.00047	0.0063
	09/27/17	200.7/200.8	**0.016**	**4.7**	<0.002	<0.006	<0.006	**13**	0.0022	**1.7**	<0.005	0.0036	NA	0.043
	06/14/17	200.7/200.8	**0.013**	**4.7**	<0.002	<0.006	<0.006	**14**	0.002	**1.8**	<0.005	0.0026	NA	0.012
	03/01/17	200.7/200.8	**0.012**	**5.4**	<0.002	<0.006	<0.006	**17**	0.002	**2.1**	<0.005	0.0036	NA	0.022
	11/08/16	200.7/200.8	**0.015**	**6**	<0.002	<0.006	<0.006	**13**	0.0022	**1.9**	<0.005	0.0042	0.00021	0.0055
	09/13/16	--	SPH Detected - No samples were collected.											
	06/10/16	--	SPH Detected - No samples were collected.											
	03/17/16	--	SPH Detected - No samples were collected.											
	11/03/15	--	SPH Detected - No samples were collected.											
	08/18/15	200.7/200.8	**0.018**	**6.1**	<0.002	0.0064	<0.006	**18**	<0.0025	**2.5**	<0.005	<0.01	<0.0025	<0.01
	06/04/15	200.7/200.8	**0.016**	**6.6**	<0.002	<0.006	<0.006	**18**	<0.005	**2.4**	<0.005	<0.005	<0.005	0.012
	03/17/15	200.7/200.8	**0.015**	**6.4**	<0.002	<0.006	<0.006	**19**	0.0034	**2.6**	<0.005	<0.01	<0.001	0.047
MKTF-37	10/28/19	--	SPH Detected - No samples were collected.											
	08/23/19	--	SPH Detected - No samples were collected.											
	05/16/19	--	SPH Detected - No samples were collected.											
	03/26/19	200.7/200.8	0.0013	0.48	<0.002	<0.006	<0.006	0.34	0.0027	**0.25**	<0.005	0.00062	0.0093	0.018
	08/23/18	200.7/200.8	0.0024	0.96	<0.002	<0.006	<0.006	0.99	0.00088	**0.55**	<0.005	<0.001	0.019	0.0081
	05/03/18	200.7/200.8	0.0025	1.1	<0.002	<0.006	<0.006	**1.9**	0.0011	**0.67**	<0.005	<0.001	0.016	0.0074
	02/15/18	--	SPH Detected - No samples were collected.											
	11/30/17	--	SPH Detected - No samples were collected.											
	09/27/17	--	SPH Detected - No samples were collected.											
	06/14/17	--	SPH Detected - No samples were collected.											
	03/01/17	200.7/200.8	0.0036	1.2	<0.002	<0.002	<0.006	**2.4**	0.002	**1.1**	<0.005	0.004	NA	0.024
	11/03/16	200.7/200.8	0.0035	0.58	<0.002	<0.006	<0.006	0.25	0.00025	**0.46**	<0.005	0.003	**0.036**	<0.01
	08/19/15	200.7/200.9	*<0.02**	1.19	<0.002	<0.006	<0.006	**2.6**	0.0047	**1.8**	<0.005	<0.01	**1.019**	<0.02
	06/04/15	200.7/200.8	*<0.01**	0.19	<0.002	<0.006	<0.006	**1.8**	<0.01	**2.3**	<0.005	<0.01	0.023	0.039
	03/17/15	200.7/200.8	<0.005	0.16	<0.002	<0.006	<0.006	**1.1**	0.0071	**2.7**	<0.005	<0.01	0.021	0.029

8.17.3 MKTF WELLS

Dissolved Metals Analytical Result Summary

			PARAMETERS											
STANDARDS			Arsenic (mg/L)	Barium (mg/L)	Cadmium (mg/L)	Chromium (mg/L)	Copper (mg/L)	Iron (mg/L)	Lead (mg/L)	Manganese (mg/L)	Silver (mg/L)	Selenium (mg/L)	Uranium (mg/L)	Zinc (mg/L)
WQCC 20 NMAC 6.2.3103 (DEC 2018)			**0.01**	**2**	**0.005**	**0.05**	**1**	**1**	**0.015**	**0.2**	**0.05**	**0.05**	**0.03**	**10**
40 CFR 141.62 MCL			0.01	2	0.005	0.1	1.3	NE	0.015	NE	NE	0.05	0.03	NE
NMED Tap Water (JUNE 2019)			0.000855	3.28	0.00624	0.0057	0.7898	13.8	NE	2.02	0.0812	0.0987	0.0592	5.96
EPA RSL for Tap Water (NOVEMBER 2019)			0.000052	3.8	0.0092	NE	0.8	14	0.015	0.43	0.094	0.1	0.004	6
WELL ID	DATE SAMPLED	METHOD												
MKTF-38	12/03/19	200.7/200.8	0.00049	0.024	<0.002	<0.006	<0.006	0.022	0.000089	**2.1**	0.002	0.0056	0.019	0.022
	08/20/19	200.7/200.8	0.00044	0.027	<0.002	<0.006	0.0048	<0.02	<0.0005	**2.4**	0.0028	0.0029	0.022	0.0044
	06/27/19	200.7/200.8	0.0005	0.028	<0.002	<0.006	<0.006	<0.02	<0.0005	**2.3**	0.0027	0.0022	0.02	0.079
	05/14/19	200.7/200.8	<0.005	0.029	<0.002	<0.006	<0.006	<0.02	<0.0025	**2.2**	0.003	0.00098	0.021	0.018
	03/26/19	200.7/200.8	0.00034	0.034	<0.002	<0.006	<0.006	0.032	0.00011	**2.1**	0.0023	0.00071	0.018	0.038
	11/20/18	200.7/200.8	0.0007	0.052	<0.002	<0.006	<0.006	<0.02	<0.0005	**2.7**	0.0034	0.0017	NA	0.031
	08/21/18	200.7/200.8	0.0014	0.043	<0.002	<0.006	<0.006	0.037	<0.0025	**2.2**	0.004	0.00076	0.027	0.01
	05/03/18	200.7/200.8	<0.005	0.034	<0.002	<0.006	<0.006	<0.02	<0.0025	**2.5**	0.0028	<0.005	0.026	0.0071
	02/12/18	200.7/200.8	0.0039	0.032	<0.002	<0.006	0.0034	<0.02	<0.0005	**1.6**	<0.005	0.0078	0.029	0.0057
	11/30/17	200.7/200.8	<0.005	0.031	<0.002	<0.006	<0.006	<0.02	<0.0025	**1.8**	<0.005	<0.005	0.026	<0.01
	09/28/17	200.7/200.8	0.0017	0.03	<0.002	<0.006	<0.006	<0.02	<0.0005	**2.1**	<0.005	0.0041	NA	0.044
	06/21/17	200.7/200.8	0.0026	0.041	<0.002	<0.006	<0.006	0.076	0.00027	**2.5**	<0.005	0.0043	0.024	0.011
	03/14/17	200.7/200.8	0.0011	0.037	<0.002	<0.006	<0.006	0.098	0.00031	**2.6**	<0.005	0.003	0.015	0.029
	11/01/16	200.7/200.8	0.0014	0.044	<0.002	<0.006	<0.006	0.038	<0.0005	**3.3**	<0.005	0.004	0.013	<0.01
	09/13/16	200.7/200.8	0.0018	0.039	<0.002	<0.006	<0.006	<0.02	<0.0005	**3.1**	<0.005	0.0053	0.013	0.004
	06/08/16	200.7/200.8	0.0013	0.031	<0.002	<0.006	<0.006	0.015	<0.0005	**2.8**	<0.005	0.0057	0.013	0.0074
	02/29/16	200.7/200.8	0.0014	0.03	<0.002	<0.006	<0.006	0.07	0.000047	**2.3**	<0.005	0.0033	0.012	0.012
	11/09/15	200.7/200.8	<0.005	0.066	<0.002	<0.006	<0.006	0.22	0.001	**3.4**	<0.005	*<0.05**	0.019	<0.01
	08/24/15	200.7/200.8	0.0019	0.066	<0.002	<0.006	<0.006	0.094	<0.0005	**3**	<0.005	0.0033	0.023	<0.01
	06/10/15	200.7/200.8	<0.005	0.074	<0.002	<0.006	<0.006	0.31	<0.005	**3.1**	<0.005	<0.005	0.021	0.021
	03/16/15	200.7/200.8	*<0.01**	0.14	<0.002	<0.006	<0.006	0.24	<0.001	**3.1**	<0.005	<0.01	0.025	0.096

8.17.3 MKTF WELLS

Dissolved Metals Analytical Result Summary

			PARAMETERS											
STANDARDS			Arsenic (mg/L)	Barium (mg/L)	Cadmium (mg/L)	Chromium (mg/L)	Copper (mg/L)	Iron (mg/L)	Lead (mg/L)	Manganese (mg/L)	Silver (mg/L)	Selenium (mg/L)	Uranium (mg/L)	Zinc (mg/L)
WQCC 20 NMAC 6.2.3103 (DEC 2018)			**0.01**	**2**	**0.005**	**0.05**	**1**	**1**	**0.015**	**0.2**	**0.05**	**0.05**	**0.03**	**10**
40 CFR 141.62 MCL			0.01	2	0.005	0.1	1.3	NE	0.015	NE	NE	0.05	0.03	NE
NMED Tap Water (JUNE 2019)			0.000855	3.28	0.00624	0.0057	0.7898	13.8	NE	2.02	0.0812	0.0987	0.0592	5.96
EPA RSL for Tap Water (NOVEMBER 2019)			0.000052	3.8	0.0092	NE	0.8	14	0.015	0.43	0.094	0.1	0.004	6
WELL ID	DATE SAMPLED	METHOD												
MKTF-39	11/05/19	200.7/200.8	0.0018	**55**	<0.002	<0.006	<0.006	**29**	<0.0025	**6.8**	0.014	0.0027	0.0046	0.029
	08/20/19	200.7/200.8	<0.005	**43**	<0.002	<0.006	0.0052	**25**	<0.0025	**9.6**	0.012	0.0013	<0.0025	<0.01
	06/05/19	200.7/200.8	<0.005	1.6	<0.002	<0.006	0.0026	**27**	<0.0025	**10**	0.01	0.0012	0.00048	0.0067
	03/28/19	--	Located within barricaded area - not accessible to collect samples											
	11/20/18	200.7/200.8	0.001	**13**	<0.002	<0.006	<0.006	**10**	<0.0005	**2.3**	0.0077	<0.001	NA	0.021
	08/21/18	200.7/200.8	<0.005	**11**	<0.002	<0.006	<0.006	**11**	<0.0025	**2**	0.003	<0.005	<0.0025	0.01
	05/06/18	200.7/200.8	0.0011	**5.6**	<0.002	<0.006	0.0046	**4.9**	0.00027	**9.96**	0.0044	<0.001	<0.0005	0.0043
	02/08/18	200.7/200.8	0.0061	**25**	<0.002	<0.006	<0.006	**22**	<0.0005	**4.2**	0.0083	0.0094	<0.0005	0.0055
	11/28/17	200.7/200.8	0.0027	**12**	<0.002	<0.006	<0.006	**12**	<0.0025	**2**	<0.005	0.0099	<0.0025	<0.01
	09/28/17	200.7/200.8	0.0042	**34**	<0.002	<0.006	<0.006	**31**	<0.0025	**5.2**	<0.005	0.013	NA	0.034
	06/08/17	200.7/200.8	0.0051	**6.7**	<0.002	<0.006	<0.006	**7.3**	0.00087	**1.3**	<0.005	0.016	0.00013	0.084
	03/14/17	200.7/200.8	0.0032	**5.6**	<0.002	<0.006	<0.006	**6.3**	0.00032	**1.2**	<0.005	0.0088	0.000079	0.022
	11/01/16	200.7/200.8	0.0036	**6**	<0.002	<0.006	<0.006	**6.9**	0.00045	**1.2**	<0.005	0.01	0.000078	<0.01
	09/13/16	200.7/200.8	0.0047	**8.9**	<0.002	<0.006	<0.006	**9.6**	0.00038	**1.7**	<0.005	0.016	0.000071	0.0031
	06/08/16	200.7/200.8	0.0024	**7.5**	<0.002	<0.006	<0.006	**8.3**	0.0013	**1.2**	<0.005	0.0061	0.00011	<0.01
	03/03/16	200.7/200.8	0.0017	**11**	<0.002	<0.006	<0.006	**11**	0.00039	**1.7**	<0.005	0.0066	0.000093	0.0092
	11/09/15	200.7/200.8	<0.005	**30**	<0.002	<0.006	<0.006	**29**	<0.005	**3.9**	<0.005	<0.02	<0.005	<0.01
	08/23/15	200.7/200.8	<0.005	**44**	<0.002	<0.006	<0.006	**45**	<0.0025	**5.8**	<0.005	<0.01	<0.0025	0.023
	06/10/15	200.7/200.8	*<0.01**	**67**	<0.002	<0.006	<0.006	**60**	<0.01	**8.8**	<0.005	<0.01	<0.01	0.012
	03/16/15	200.7/200.8	*<0.01**	**21**	<0.002	<0.006	<0.006	**31**	<0.005	**7**	<0.005	0.011	0.0099	<0.01

8.17.3 MKTF WELLS

Dissolved Metals Analytical Result Summary

			PARAMETERS											
STANDARDS			Arsenic (mg/L)	Barium (mg/L)	Cadmium (mg/L)	Chromium (mg/L)	Copper (mg/L)	Iron (mg/L)	Lead (mg/L)	Manganese (mg/L)	Silver (mg/L)	Selenium (mg/L)	Uranium (mg/L)	Zinc (mg/L)
WQCC 20 NMAC 6.2.3103 (DEC 2018)			**0.01**	**2**	**0.005**	**0.05**	**1**	**1**	**0.015**	**0.2**	**0.05**	**0.05**	**0.03**	**10**
40 CFR 141.62 MCL			0.01	2	0.005	0.1	1.3	NE	0.015	NE	NE	0.05	0.03	NE
NMED Tap Water (JUNE 2019)			0.000855	3.28	0.00624	0.0057	0.7898	13.8	NE	2.02	0.0812	0.0987	0.0592	5.96
EPA RSL for Tap Water (NOVEMBER 2019)			0.000052	3.8	0.0092	NE	0.8	14	0.015	0.43	0.094	0.1	0.004	6
WELL ID	**DATE SAMPLED**	**METHOD**												
MKTF-40	10/22/19	200.7/200.8	0.00073	0.062	<0.002	<0.006	<0.006	0.032	0.0023	0.021	0.0046	<0.005	NA	0.016
	08/22/19	200.7/200.8	0.00074	0.064	<0.002	<0.006	0.0031	0.098	<0.0025	0.0068	0.0047	<0.005	**0.05**	0.0031
	05/06/19	200.7/200.8	0.00073	0.051	<0.002	<0.006	<0.006	0.034	<0.0025	0.0019	0.0071	<0.005	**0.046**	0.037
	02/20/19	200.7/200.8	<0.005	0.052	<0.002	<0.006	0.0058	0.035	<0.0025	0.0029	0.0057	<0.005	**0.042**	0.027
	11/15/18	200.7/200.8	0.0014	0.049	<0.002	<0.006	0.0032	<0.02	<0.0005	0.0031	0.0054	<0.001	**0.039**	0.025
	08/17/18	200.7/200.8	0.0023	0.04	<0.002	<0.006	<0.006	<0.02	<0.0025	<0.002	0.0052	<0.005	**0.053**	0.011
	05/06/18	200.7/200.8	0.0029	0.059	<0.002	<0.006	0.0055	0.03	<0.0025	0.036	0.03	<0.005	**0.048**	<0.01
	02/05/18	200.7/200.8	*<0.05**	0.08	<0.002	<0.006	0.0033	<0.02	*<0.025**	0.06	0.0082	0.012	**0.044**	0.0034
	11/21/17	200.7/200.8	0.0046	0.076	<0.002	<0.006	<0.006	0.072	<0.0025	0.021	0.0056	<0.01	**0.052**	<0.01
	09/25/17	200.7/200.8	0.0026	0.072	<0.002	<0.006	<0.006	0.094	<0.0025	0.052	<0.005	0.0082	NA	0.012
	06/05/17	200.7/200.8	0.0023	0.079	<0.002	<0.006	0.0081	0.053	<0.0025	0.09	<0.005	0.0075	**0.058**	0.018
	03/07/17	200.7/200.8	0.0029	0.097	<0.002	<0.006	<0.006	<0.02	<0.0025	0.04	<0.005	0.01	NA	0.02
	10/31/16	200.7/200.8	0.0039	0.1	<0.002	<0.006	<0.006	0.045	<0.0025	0.11	<0.005	0.012	**0.06**	0.0029
	09/08/16	200.7/200.8	0.0023	0.11	<0.002	<0.006	<0.006	0.11	<0.0025	0.052	<0.005	0.0096	**0.059**	0.0031
	06/09/16	200.7/200.8	*<0.05**	0.13	<0.002	<0.006	<0.006	0.089	<0.0025	0.18	<0.005	0.019	**0.058**	<0.01
	02/23/16	200.7/200.8	*<0.01**	0.064	<0.002	<0.006	<0.006	0.093	0.00053	0.041	<0.005	<0.01	**0.077**	0.016
	11/04/15	200.7/200.8	<0.005	0.15	<0.002	<0.006	<0.006	0.051	<0.0025	**0.23**	<0.005	<0.02	**0.06**	<0.01
	08/21/15	200.7/200.8	<0.005	0.086	<0.002	<0.006	<0.006	0.039	<0.0025	0.18	<0.005	0.0078	**0.087**	<0.01
	06/10/15	200.7/200.8	<0.005	0.16	<0.002	<0.006	<0.006	0.11	<0.005	0.15	<0.005	0.0096	**0.069**	0.022
	03/11/15	200.7/200.8	*<0.01**	0.19	<0.002	<0.006	<0.006	0.11	<0.01	0.2	<0.005	0.02	**0.07**	<0.01

8.17.3 MKTF WELLS

Dissolved Metals Analytical Result Summary

			PARAMETERS											
STANDARDS			Arsenic (mg/L)	Barium (mg/L)	Cadmium (mg/L)	Chromium (mg/L)	Copper (mg/L)	Iron (mg/L)	Lead (mg/L)	Manganese (mg/L)	Silver (mg/L)	Selenium (mg/L)	Uranium (mg/L)	Zinc (mg/L)
WQCC 20 NMAC 6.2.3103 (DEC 2018)			**0.01**	**2**	**0.005**	**0.05**	**1**	**1**	**0.015**	**0.2**	**0.05**	**0.05**	**0.03**	**10**
40 CFR 141.62 MCL			0.01	2	0.005	0.1	1.3	NE	0.015	NE	NE	0.05	0.03	NE
NMED Tap Water (JUNE 2019)			0.000855	3.28	0.00624	0.0057	0.7898	13.8	NE	2.02	0.0812	0.0987	0.0592	5.96
EPA RSL for Tap Water (NOVEMBER 2019)			0.000052	3.8	0.0092	NE	0.8	14	0.015	0.43	0.094	0.1	0.004	6
WELL ID	DATE SAMPLED	METHOD												
MKTF-41	10/23/19	200.7/200.8	0.0022	0.073	<0.002	<0.006	0.0035	0.0091	<0.0005	0.0013	<0.005	0.039	NA	0.011
	08/22/19	200.7/200.8	0.0018	0.073	<0.002	<0.006	0.0025	0.022	<0.0005	0.0024	<0.005	0.034	0.014	0.0058
	05/07/19	200.7/200.8	0.0011	0.075	<0.002	<0.006	0.0019	<0.02	<0.0025	0.0023	<0.005	0.036	0.013	0.042
	02/13/19	200.7/200.8	0.0019	0.06	<0.002	<0.006	0.0028	<0.02	<0.005	0.0085	<0.0005	0.033	0.012	0.022
	11/15/18	200.7/200.8	0.002	0.059	<0.002	0.0021	<0.006	<0.02	<0.0005	0.0024	<0.005	0.033	0.0092	0.023
	08/29/18	200.7/200.8	<0.005	0.056	<0.002	0.0016	<0.006	0.029	<0.0025	0.0028	<0.005	0.035	0.013	0.01
	05/09/18	200.7/200.8	0.0024	0.052	<0.002	0.0013	<0.006	<0.02	<0.0025	0.0014	<0.005	0.04	0.011	0.0084
	02/07/18	200.7/200.8	*<0.02**	0.057	<0.002	<0.006	<0.006	0.017	<0.0005	0.0016	<0.005	0.038	0.015	0.0075
	11/27/17	200.7/200.8	*<0.05**	0.061	<0.002	<0.006	<0.006	0.02	<0.0025	0.0016	<0.005	0.037	0.013	<0.01
	09/25/17	200.7/200.8	0.0063	0.063	<0.002	0.0021	<0.006	0.018	<0.0005	0.0014	<0.005	0.045	NA	0.065
	06/06/17	200.7/200.8	0.0064	0.056	<0.002	0.0017	<0.006	0.14	0.00055	0.014	<0.005	0.044	0.02	0.018
	03/07/17	200.7/200.8	0.0055	0.056	<0.002	0.002	<0.006	<0.02	<0.0005	0.0016	<0.005	0.049	NA	0.015
	10/31/16	200.7/200.8	0.0054	0.058	<0.002	<0.006	<0.006	0.052	<0.0025	0.0043	<0.005	0.05	0.013	<0.01
	09/09/16	200.7/200.8	*<0.05**	0.059	<0.002	<0.006	<0.006	<0.02	<0.0005	0.0012	<0.005	0.048	0.014	0.0098
	06/09/16	200.7/200.8	0.0075	0.071	<0.002	0.0027	<0.006	0.19	0.00091	0.019	<0.005	**0.06**	0.023	0.0029
	02/24/16	200.7/200.8	0.0051	0.07	<0.002	0.0025	<0.006	0.074	0.00035	0.0068	<0.005	0.047	0.023	0.0063
	11/05/15	200.7/200.8	*<0.01**	0.083	<0.002	<0.006	<0.006	0.27	0.0015	0.037	<0.005	**0.054**	0.022	<0.01
	08/21/15	200.7/200.8	*<0.01**	0.097	<0.002	<0.006	<0.006	**1.4**	0.0013	0.044	<0.005	0.049	0.026	<0.01
	06/09/15	200.7/200.8	<0.005	0.073	<0.002	<0.006	<0.006	0.18	<0.005	0.011	<0.005	0.045	0.03	0.018
	03/12/15	200.7/200.8	*<0.01**	0.081	<0.002	<0.006	<0.006	0.2	<0.001	0.024	<0.005	**0.059**	**0.034**	0.013

8.17.3 MKTF WELLS

Dissolved Metals Analytical Result Summary

			PARAMETERS											
STANDARDS			Arsenic (mg/L)	Barium (mg/L)	Cadmium (mg/L)	Chromium (mg/L)	Copper (mg/L)	Iron (mg/L)	Lead (mg/L)	Manganese (mg/L)	Silver (mg/L)	Selenium (mg/L)	Uranium (mg/L)	Zinc (mg/L)
WQCC 20 NMAC 6.2.3103 (DEC 2018)			**0.01**	**2**	**0.005**	**0.05**	**1**	**1**	**0.015**	**0.2**	**0.05**	**0.05**	**0.03**	**10**
40 CFR 141.62 MCL			0.01	2	0.005	0.1	1.3	NE	0.015	NE	NE	0.05	0.03	NE
NMED Tap Water (JUNE 2019)			0.000855	3.28	0.00624	0.0057	0.7898	13.8	NE	2.02	0.0812	0.0987	0.0592	5.96
EPA RSL for Tap Water (NOVEMBER 2019)			0.000052	3.8	0.0092	NE	0.8	14	0.015	0.43	0.094	0.1	0.004	6
WELL ID	DATE SAMPLED	METHOD												
MKTF-42	10/23/19	200.7/200.8	0.004	0.059	<0.002	<0.006	0.005	0.03	<0.005	0.1	0.00094	<0.01	NA	0.015
	08/22/19	200.7/200.8	0.0016	0.058	<0.002	<0.006	0.0029	0.049	<0.0005	0.11	<0.005	0.00058	0.0098	0.0091
	05/07/19	200.7/200.8	0.0012	0.059	<0.002	<0.006	0.0024	0.037	*<0.025**	0.121	<0.005	0.0015	0.012	0.0078
	02/13/19	200.7/200.8	0.0014	0.057	<0.002	<0.006	0.0034	<0.02	<0.0005	0.044	<0.005	0.0012	0.016	0.016
	11/15/18	200.7/200.8	0.0019	0.037	<0.002	<0.006	<0.006	0.02	<0.0005	0.055	<0.005	0.0012	0.0092	0.025
	08/29/18	200.7/200.8	<0.005	0.064	<0.002	<0.006	0.0051	0.11	<0.0025	0.14	<0.005	<0.005	0.011	0.0088
	05/09/18	200.7/200.8	<0.005	0.057	<0.002	<0.006	<0.006	0.096	<0.0025	0.17	<0.005	<0.005	0.0077	0.006
	02/07/18	200.7/200.8	<0.005	0.068	<0.002	<0.006	<0.006	0.28	<0.0005	**0.21**	<0.005	<0.005	0.0083	0.0068
	11/27/17	200.7/200.8	0.0033	0.064	<0.002	<0.006	<0.006	0.21	<0.0025	**0.21**	<0.005	0.0044	0.0093	<0.01
	09/25/17	200.7/200.8`	0.0036	0.059	<0.002	<0.006	<0.006	0.056	<0.0005	0.19	<0.005	0.0086	NA	0.006
	06/06/17	200.7/200.8	0.0035	0.065	<0.002	<0.006	0.0084	0.21	<0.0005	**0.24**	<0.005	0.0079	0.013	0.016
	03/07/17	200.7/200.8	0.0033	0.079	<0.002	<0.006	<0.006	0.061	<0.0005	**0.23**	<0.005	0.0086	NA	0.015
	10/31/16	200.7/200.8	0.0044	0.075	<0.002	<0.006	<0.006	0.18	<0.0025	**0.3**	<0.005	0.012	0.013	<0.01
	09/09/16	200.7/200.8	0.0033	0.078	<0.002	<0.006	0.0052	0.081	0.00067	**0.29**	<0.005	0.0095	0.019	0.0078
	06/09/16	200.7/200.8`	0.006	0.079	<0.002	<0.006	<0.006	0.077	0.00031	**0.37**	<0.005	0.016	0.021	<0.01
	02/24/16	200.7/200.8	0.0029	0.073	<0.002	<0.006	<0.006	0.19	0.00016	**0.44**	<0.005	0.0071	0.025	0.0099
	11/05/15	200.7/200.8	<0.005	0.071	<0.002	<0.006	<0.006	0.092	<0.0005	**0.43**	<0.005	0.012	0.024	<0.01
	08/21/15	200.7/200.8	<0.005	0.078	<0.002	<0.006	<0.006	0.046	<0.0005	**0.39**	<0.005	0.0075	0.029	<0.01
	06/09/15	200.7/200.8	<0.005	0.082	<0.002	<0.006	<0.006	0.031	<0.005	**0.55**	<0.005	0.0072	**0.035**	<0.01
	03/11/15	200.7/200.8	*<0.01**	0.094	<0.002	<0.006	<0.006	0.11	<0.001	**0.54**	<0.005	0.015	**0.04**	0.036

8.17.3 MKTF WELLS

Dissolved Metals Analytical Result Summary

			PARAMETERS											
STANDARDS			Arsenic (mg/L)	Barium (mg/L)	Cadmium (mg/L)	Chromium (mg/L)	Copper (mg/L)	Iron (mg/L)	Lead (mg/L)	Manganese (mg/L)	Silver (mg/L)	Selenium (mg/L)	Uranium (mg/L)	Zinc (mg/L)
WQCC 20 NMAC 6.2.3103 (DEC 2018)			**0.01**	**2**	**0.005**	**0.05**	**1**	**1**	**0.015**	**0.2**	**0.05**	**0.05**	**0.03**	**10**
40 CFR 141.62 MCL			0.01	2	0.005	0.1	1.3	NE	0.015	NE	NE	0.05	0.03	NE
NMED Tap Water (JUNE 2019)			0.000855	3.28	0.00624	0.0057	0.7898	13.8	NE	2.02	0.0812	0.0987	0.0592	5.96
EPA RSL for Tap Water (NOVEMBER 2019)			0.000052	3.8	0.0092	NE	0.8	14	0.015	0.43	0.094	0.1	0.004	6
WELL ID	DATE SAMPLED	METHOD												
MKTF-43	10/24/19	200.7/200.8	0.0011	0.095	<0.002	<0.006	<0.006	0.014	<0.0025	**0.45**	0.014	0.0011	NA	0.023
	08/22/19	200.7/200.8	0.0011	0.085	<0.002	<0.006	0.009	<0.02	<0.0025	**0.77**	0.0096	0.00092	**0.058**	0.0052
	05/08/19	200.7/200.8	0.00073	0.1	<0.002	<0.006	0.0042	<0.02	<0.00245	**0.53**	0.011	<0.005	**0.034**	0.0086
	02/13/19	200.7/200.8	0.0015	0.094	<0.002	<0.006	0.0056	0.011	<0.0005	**0.3**	0.012	<0.005	**0.046**	0.02
	11/15/18	200.7/200.8	0.002	0.071	<0.002	<0.006	0.0032	<0.02	<0.0005	**0.26**	0.0088	<0.001	0.028	0.025
	08/30/18	200.7/200.8	0.0036	0.14	<0.002	<0.006	<0.006	<0.02	<0.0005	**0.38**	0.013	<0.005	0.019	0.011
	05/09/18	200.7/200.8	0.01	0.057	<0.002	<0.006	0.0057	<0.02	<0.005	**1.7**	0.017	<0.01	**0.086**	0.0064
	02/07/18	200.7/200.8	**0.013**	0.075	*<0.01**	<0.03	<0.03	<0.1	<0.005	**5.5**	0.0096	*<0.05**	**0.14**	<0.05
	11/27/17	200.7/200.8	0.0049	0.081	<0.002	<0.006	0.0076	0.072	<0.005	**6.6**	*<0.05**	*<0.05**	**0.14**	<0.01
	09/25/17	200.7/200.8	*<0.1**	0.071	<0.002	<0.006	<0.006	0.022	<0.005	**9.7**	<0.005	0.044	NA	<0.02
	06/06/17	200.7/200.8	*<0.1**	0.083	<0.002	<0.006	<0.006	0.028	<0.005	**6.6**	<0.005	0.045	**0.18**	0.017
	03/08/17	200.7/200.8	**0.017**	0.068	*<0.01**	<0.03	<0.03	<0.1	<0.01	**11**	<0.025	**0.059**	NA	0.037
	10/31/16	200.7/200.8	*<0.05**	0.13	<0.002	<0.006	<0.006	0.48	<0.01	**19**	<0.005	*<0.5**	**0.19**	0.016
	09/09/16	200.7/200.8	**0.018**	0.086	<0.002	<0.006	<0.006	0.073	<0.005	**23**	<0.005	**0.067**	**0.25**	0.013
	06/09/16	200.7/200.8	**0.027**	0.065	<0.002	<0.006	<0.006	0.11	<0.005	**20**	<0.005	**0.091**	**0.27**	0.0073
	02/24/16	200.7/200.8	**0.013**	0.057	<0.002	<0.006	<0.006	0.041	*<0.025**	**12**	<0.005	0.043	**0.24**	0.017
	11/05/15	200.7/200.8	*<0.05**	0.085	<0.002	<0.006	<0.006	0.11	<0.005	**14**	<0.005	**0.094**	**0.25**	0.011
	08/21/15	200.7/200.8	*<0.02**	0.1	<0.002	<0.006	<0.006	0.062	<0.01	**20**	<0.005	**0.06**	**0.28**	<0.1
	06/10/15	200.7/200.8	*<0.05**	0.12	<0.002	<0.006	<0.006	**1.1**	*<0.05**	**15**	<0.005	*<0.1**	**0.23**	0.032
	03/11/15	200.7/200.8	*<0.05**	0.17	*<0.01**	0.048	<0.03	0.49	*<0.05**	**3.7**	<0.025	**0.11**	**0.15**	<0.05

8.17.3 MKTF WELLS

Dissolved Metals Analytical Result Summary

			PARAMETERS											
STANDARDS			Arsenic (mg/L)	Barium (mg/L)	Cadmium (mg/L)	Chromium (mg/L)	Copper (mg/L)	Iron (mg/L)	Lead (mg/L)	Manganese (mg/L)	Silver (mg/L)	Selenium (mg/L)	Uranium (mg/L)	Zinc (mg/L)
WQCC 20 NMAC 6.2.3103 (DEC 2018)			**0.01**	**2**	**0.005**	**0.05**	**1**	**1**	**0.015**	**0.2**	**0.05**	**0.05**	**0.03**	**10**
40 CFR 141.62 MCL			0.01	2	0.005	0.1	1.3	NE	0.015	NE	NE	0.05	0.03	NE
NMED Tap Water (JUNE 2019)			0.000855	3.28	0.00624	0.0057	0.7898	13.8	NE	2.02	0.0812	0.0987	0.0592	5.96
EPA RSL for Tap Water (NOVEMBER 2019)			0.000052	3.8	0.0092	NE	0.8	14	0.015	0.43	0.094	0.1	0.004	6
WELL ID	DATE SAMPLED	METHOD												
MKTF-44	10/24/19	200.7/200.8	0.0051	0.11	<0.002	0.0063	0.0048	0.017	<0.0005	0.0015	<0.005	0.012	NA	0.017
	08/22/19	200.7/200.8	0.0036	0.22	<0.002	0.01	0.0056	0.082	0.00018	0.0031	0.001	0.01	**0.12**	0.0054
	05/08/19	200.7/200.8	0.0021	0.47	<0.002	0.015	0.0037	<0.02	<0.0025	0.00049	0.0022	0.0085	**0.11**	0.008
	02/13/19	200.7/200.8	0.0022	0.23	<0.002	0.008	0.0034	0.025	0.000097	0.027	0.0021	0.0081	**0.13**	0.018
	11/28/18	200.7/200.8	0.0069	0.032	<0.002	0.0027	0.0039	0.16	0.00028	0.0049	<0.005	0.009	**0.18**	0.016
	08/30/18	200.7/200.8	0.005	0.062	<0.002	0.004	<0.006	<0.02	<0.0005	0.0013	<0.005	0.011	**0.15**	0.006
	05/10/18	200.7/200.8	0.0084	0.038	<0.002	0.0044	0.0036	0.087	<0.0025	0.0034	<0.005	0.013	**0.17**	0.0089
	02/08/18	200.7/200.8	0.0075	0.039	<0.002	0.0033	<0.006	<0.02	<0.0005	0.00056	<0.005	<0.015	**0.17**	0.0057
	11/28/17	200.7/200.8	0.0054	0.076	<0.002	<0.006	<0.006	0.034	<0.0005	0.0012	<0.005	0.0097	**0.14**	0.005
	09/25/17	200.7/200.8	0.0033	0.16	<0.002	0.013	<0.006	<0.02	<0.0005	0.00064	<0.005	0.012	NA	0.011
	06/05/17	200.7/200.8	0.0035	0.14	<0.002	0.011	<0.006	0.044	<0.0025	0.0029	<0.005	0.012	**0.13**	0.012
	03/08/17	200.7/200.8	0.0043	0.96	<0.002	0.032	<0.006	<0.02	<0.0025	0.0082	<0.005	0.017	NA	0.023
	11/01/16	200.7/200.8	0.0095	0.037	<0.002	0.0043	<0.006	0.37	0.0012	0.011	<0.005	0.014	**0.17**	0.0061
	09/09/16	200.7/200.8	0.0088	0.058	<0.002	0.0077	0.0041	0.97	0.005	0.042	<0.005	0.015	**0.17**	0.0078
	06/09/16	200.7/200.8	0.0049	0.11	<0.002	0.011	<0.006	0.045	0.00019	0.0031	<0.005	0.016	**0.17**	<0.01
	02/24/16	200.7/200.8	0.0052	0.072	<0.002	0.009	<0.006	0.13	0.00039	0.0046	<0.005	0.012	**0.18**	0.014
	11/09/15	200.7/200.8	*<0.01**	0.053	<0.002	0.0062	<0.006	0.87	0.0053	0.081	<0.005	0.014	**0.21**	<0.01
	08/17/15	200.7/200.8	<0.005	0.11	<0.002	0.013	<0.006	**2.6**	0.0075	0.2	<0.005	0.015	**0.21**	0.016
	06/10/15	200.7/200.8	<0.005	0.05	<0.002	0.0099	<0.006	0.91	<0.005	0.042	<0.005	0.015	**0.21**	0.021
	03/12/15	200.7/200.8	*<0.01**	0.07	<0.002	0.0072	<0.006	0.85	0.0031	0.079	<0.005	0.017	**0.22**	0.011
MKTF-45			SPH Detected - No samples were collected.											
MKTF-46	12/03/19	200.7/200.8	0.00078	0.074	<0.002	<0.006	NA	0.039	<0.0005	**0.43**	0.0043	0.00088	NA	0.016
MKTF-47	12/03/19	200.7/200.8	0.00081	0.072	<0.002	0.0097	NA	<0.02	<0.0005	0.0052	0.0014	0.0048	NA	0.058
MKTF-48	12/03/19	200.7/200.8	0.0028	0.0012	<0.002	<0.006	NA	0.08	0.00044	**1.5**	<0.005	0.00026	NA	0.057
MKTF-49	12/03/19	200.7/200.8	0.0023	**5.9**	<0.002	<0.006	NA	**14**	<0.0025	**7.2**	0.003	<0.005	NA	0.033

8.17.3 MKTF WELLS

Dissolved Metals Analytical Result Summary

			PARAMETERS											
STANDARDS			Arsenic (mg/L)	Barium (mg/L)	Cadmium (mg/L)	Chromium (mg/L)	Copper (mg/L)	Iron (mg/L)	Lead (mg/L)	Manganese (mg/L)	Silver (mg/L)	Selenium (mg/L)	Uranium (mg/L)	Zinc (mg/L)
WQCC 20 NMAC 6.2.3103 (DEC 2018)			**0.01**	**2**	**0.005**	**0.05**	**1**	**1**	**0.015**	**0.2**	**0.05**	**0.05**	**0.03**	**10**
40 CFR 141.62 MCL			0.01	2	0.005	0.1	1.3	NE	0.015	NE	NE	0.05	0.03	NE
NMED Tap Water (JUNE 2019)			0.000855	3.28	0.00624	0.0057	0.7898	13.8	NE	2.02	0.0812	0.0987	0.0592	5.96
EPA RSL for Tap Water (NOVEMBER 2019)			0.000052	3.8	0.0092	NE	0.8	14	0.015	0.43	0.094	0.1	0.004	6
WELL ID	DATE SAMPLED	METHOD												
MKTF-50	12/03/19	200.7/200.8	**0.011**	**2**	<0.002	<0.006	NA	**3.4**	<0.0005	**1.3**	<0.005	<0.001	NA	0.054

DEFINITIONS

NE = Not established

NA = Not analyzed

Bold and highlighted values represent values above the applicable standards

STANDARDS

WQCC 20 NMAC 6.2.3103 - Standards for Ground Water of 10,000 mg/l TDS Concentration or Less.

a) Human Health Standards; b) Other Standards for Domestic Water

40 CFR 141.62 Maximum Contaminant Levels for Inorganic Contaminants

NMED Risk Assessment Guidance for Investigations and Remediations Table A-1

EPA Regional Screening Level (RSL) Summary Table

NOTES

Wells marked in red were not sampled because of SPH, well was dry, or well was inaccessible.

Items notes with a * and italics have a detection limit greater than or equal to the applicable standard.

8.17.4 MKTF WELLS

Semi-Volatile Organic Compound Analytical Result Summary

			PARAMETERS																												
		STANDARDS	Acenaphthene (mg/L)	Aniline (mg/L)	Anthracene (mg/L)	Benz(a) anthracene (mg/L)	Benzoic Acid (mg/L)	Benzyl alcohol (mg/L)	Bis(2-ethylhexyl) phthalate (mg/L)	Butyl benzyl phthalate (mg/L)	Carbazole (mg/L)	Chrysene (mg/L)	1,4-Dioxane (mg/L)	Di-n-octyl phthalate (mg/L)	Dibenzo furan (mg/L)	1,4-Dichloro benzene (mg/L)	Diethyl phthalate (mg/L)	Dimethyl phthalate (mg/L)	2,4-Dimethyl phenol (mg/L)	Fluorene (mg/L)	1-Methyl naphthalene (mg/L)	2-Methyl naphthalene (mg/L)	2-Methyl phenol (mg/L)	3+4-Methyl phenol (mg/L)	Naphthalene (mg/L)	Pentachloro phenol (mg/L)	Phenanthrene (mg/L)	Phenol (mg/L)	Pyrene (mg/L)	Pyridine (mg/L)	2,4,6-Trichlorophenol (mg/L)
		WQCC 20 NMAC 6.2.3103 (DEC 2018)	NE	NE	NE	NE	NE	NE	NE	NE	NE	NE	NE	NE	NE	NE	NE	NE	NE	NE	NE	NE	NE	NE	0.03	0.001	NE	0.005	NE	NE	NE
		40 CFR 141.61 MCL	NE	NE	NE	NE	NE	NE	0.006	NE	NE	NE	NE	NE	NE	0.075	NE	NE	NE	NE	NE	NE	NE	NE	NE	0.001	NE	NE	NE	NE	NE
		NMED Tap Water (JUNE 2019)	0.535	NE	1.72	0.00012	NE	NE	0.0556	NE	NE	0.0343	0.0046	NE	NE	0.302	14.8	0.612	0.354	0.288	0.0114	0.035	NE	NE	0.00165	0.0004	0.17	5.76	0.117	NE	0.0119
		EPA RSL for Tap Water (NOVEMBER 2019)	0.53	0.13	1.8	0.00003	75	2	0.056	0.16	NE	0.025	0.00046	0.2	0.0079	0.00048	15	NE	0.36	0.29	0.0011	0.036	0.93	0.93	0.00017	0.000041	NE	5.8	0.12	0.02	0.0041
Well ID	DATE SAMPLED	METHOD																													
MKTF-1	Second half 2016-2019	--	SPH Detected - No samples were collected.																												
	02/24/16	8270C		0.0099			<0.02		<0.01*		<0.01								0.026	<0.01	0.052	0.022	0.038	0.046	0.088		<0.01	0.012			
	11/04/15	8270C		0.011			<0.02		<0.01*		<0.01								0.068	<0.01	0.2	0.087	0.049	0.07	0.12		0.012	0.036			
	08/21/15	8270C		0.014			<0.02		<0.01*		<0.01								0.046	<0.01	0.14	0.03	0.054	0.05	0.1		<0.01	0.022			
	06/09/15	8270C		<0.01			<0.02		<0.01*		<0.01								0.08	<0.01	0.34	0.16	0.076	0.05	0.19		0.022	0.031			
	03/11/15	8270C		0.018			<0.02		<0.01*		<0.01								0.051	<0.01	0.12	<0.01	0.061	0.035	0.09		<0.01	0.023			
	06/06/14	8270C		<0.01			<0.02		<0.01*		<0.01								0.05	0.02	0.31	0.31	0.06	0.031	0.31		0.028	0.019			
MKTF-2	11/19/19	8270D	0.00032	<0.0005		<0.0001	<0.0005		0.0018	<0.0005	<0.0005	<0.0005	0.0397	<0.0005	<0.0005	<0.0005	<0.0005	<0.0005	<0.0005	<0.0005	0.0061	<0.0005	<0.0005	<0.0005	0.00066	<0.0005	<0.0005	0.00487	<0.0005	<0.0005	
	08/23/19	8270C		<0.01		<0.01*	<0.02		<0.01*	<0.01	<0.01			<0.01				<0.01	<0.01	<0.01	0.017	<0.01	<0.01	<0.01	<0.01		<0.01	0.027			
	05/06/19	8270C		<0.01		<0.01*	<0.02		<0.01*	<0.01	<0.01			<0.01				<0.01	0.0052	<0.01	0.019	<0.01	<0.01	<0.01	0.0075		<0.01	0.0087			
	03/28/19	8270C		<0.01		<0.01*	<0.02		<0.01*	<0.01	<0.01			<0.01				<0.01	<0.01	<0.01	0.0089	<0.01	<0.01	<0.01	<0.01		<0.01	0.0083			
	11/28/18	8270C		<0.01		<0.01*	<0.02		<0.01*	<0.01	<0.01			<0.01				<0.01	0.03	<0.01	0.034	<0.01	0.022	0.017	0.035		<0.01	0.014			
	08/20/18	8270C		<0.01		<0.01*	<0.02		<0.01*	<0.01	<0.01			<0.01				<0.01	0.0099	<0.01	0.009	<0.01	0.012	0.01	0.0069		<0.01	0.015			
	05/01/18	8270c		<0.01		<0.01*	<0.02		<0.01*	<0.01	<0.01			<0.01				<0.01	<0.01	<0.01	0.022	<0.01	<0.01	0.009	0.016		<0.01	0.0088			
	02/06/18	8270C		<0.01		<0.01*	<0.02		<0.01*	<0.01	<0.01			<0.01				<0.01	0.008	<0.01	0.031	<0.01	0.0038	0.012	0.02		<0.01	0.016			
	11/20/17	8270C		<0.01		<0.01*	<0.02		<0.01*	<0.01	<0.01			0.0047				<0.01	0.0093	<0.01	0.03	<0.010	0.0064	0.011	0.017		<0.01	0.014			
	10/03/17	8270C		<0.01		<0.01*	0.013		<0.01*	<0.01	<0.01			<0.01				<0.01	0.003	<0.01	0.0097	<0.01	<0.01	<0.01	0.005		<0.01	0.019			
	03/16/17	8270C		<0.01		<0.01*	<0.02		<0.01*	<0.01	<0.01			0.0033				<0.01	0.011	<0.01	0.03	<0.01	0.013	0.013	0.038		<0.01	0.016			
	10/28/16	8270C		<0.01		<0.01*	<0.02		0.0071	0.0027	<0.01			0.0068				<0.01	<0.01	<0.01	0.006	<0.01	<0.01	<0.01	0.0046		<0.01	<0.01*			
	09/07/16	8270C		<0.01		0.0028	0.0083		0.0043		<0.01			0.0034				0.0054	<0.01	<0.01	0.0082	<0.01	<0.01	<0.01	0.0051		<0.01	0.0067			
	06/10/16	8270C		<0.05			<0.1		0.018		<0.05								<0.05	<0.05	<0.05*	<0.05*	<0.05	<0.05	<0.05*		<0.05	<0.05*			
	02/24/16	8270C		<0.01			<0.02		<0.01*		<0.01								<0.01	<0.01	<0.01	<0.01	<0.01	<0.01	<0.01		<0.01	<0.01*			
	11/05/15	8270C		<0.01			<0.02		<0.01*		<0.01								<0.01	<0.01	<0.01	<0.01	<0.01	<0.01	<0.01		<0.01	<0.01*			
	08/21/15	8270C		<0.01			<0.02		<0.01*		<0.01								<0.01	<0.01	<0.01	<0.01	<0.01	<0.01	<0.01		<0.01	<0.01*			
	06/09/15	8270C		<0.01			<0.02		<0.01*		<0.01								<0.01	<0.01	<0.01	<0.01	<0.01	<0.01	<0.01		<0.01	<0.01*			
	03/11/15	8270C		<0.01			<0.02		<0.01*		<0.01								<0.01	<0.01	<0.01	<0.01	<0.01	<0.01	<0.01		<0.01	<0.01*			
	11/14/14	8270C		<0.01			<0.02		0.011		<0.01								<0.01	<0.01	<0.01	<0.01	<0.01	<0.01	<0.01		<0.01	<0.01*			
	09/18/14	8270C		<0.01			<0.02		<0.01*		<0.01								<0.01	<0.01	0.023	<0.01	<0.02	<0.01	<0.01		<0.01	<0.01*			
	06/06/14	8270C		<0.01			<0.02		<0.01*		<0.01								<0.01	<0.01	<0.01	<0.01	<0.02	<0.01	<0.01		<0.01	<0.01*			
	04/08/14	8270C		<0.01			<0.02		<0.01*		<0.01								<0.01	<0.01	<0.01	<0.01	<0.02	<0.01	<0.01		<0.01	<0.01*			
MKTF-3			SPH Detected - No samples were collected.																												
MKTF-4	10/30/19	8270D	0.00456	<0.005			<0.005	<0.005	<0.005		0.0181		0.011	<0.005	0.00235				0.00466	0.0062	0.133	0.144	<0.005	<0.005	0.215		0.00593	<0.005*	0.00317	<0.005	
	08/21/19	8270C	0.0056	<0.01			<0.02		<0.01*		0.02			<0.01	<0.01*				<0.01	0.0076	0.16	0.17	<0.01	<0.01	0.44		0.0075	<0.01*		<0.01	
	05/13/19	8270C	0.0057	<0.01			<0.02	0.0024	0.0049		0.017			<0.01	<0.01*				0.0044	0.0082	0.15	0.17	<0.01	<0.01	0.25		0.0055	<0.01*		<0.01	
	03/26/19	8270C	<0.01	<0.01			<0.02		<0.01*		0.009			<0.01	<0.01*				<0.01	0.0074	0.11	0.12	<0.01	<0.01	0.19		<0.01	0.065		<0.01	
	11/20/18	8270C	<0.01	<0.01			<0.02		<0.01*		0.015			<0.01	<0.01*				<0.01	<0.01	0.1	0.11	<0.01	<0.01	0.2		<0.01	<0.01*		<0.01	
	09/04/18	8270C	<0.01	<0.01			<0.02		<0.01*		0.019			<0.01	<0.01*				0.0071	<0.01	0.13	0.16	<0.01	<0.01	0.24		<0.01	<0.01*		<0.01	
	05/02/18	8270C	<0.01	<0.01			<0.02		<0.01*		0.012			<0.01	<0.01*				<0.01	<0.01	0.094	0.097	<0.01	<0.01	0.15		<0.01	<0.01*		<0.01	
	02/14/18	8270C	0.0058	<0.01			<0.02		<0.01*		0.015			<0.01	<0.01*				0.0036	0.0069	0.15	0.16	<0.01	<0.01	0.22		0.0047	0.0066		<0.01	
	11/28/17	8270C	0.0068	<0.01			<0.02		<0.01*		0.021			<0.01	<0.01*				0.0054	0.0081	0.16	0.19	<0.01	<0.01	0.27		0.0068	0.0043		<0.01	
	09/26/17	8270C	0.0048	<0.01			<0.02		<0.01*		0.019			<0.01	<0.01*				0.0049	0.0074	0.18	0.22	<0.01	<0.01	0.3		0.0063	<0.01*		<0.01	
	06/08/17	8270C	0.0052	<0.01			<0.02		0.055		0.011			<0.01	<0.01*				0.0054	0.0048	0.14	0.15	<0.01	<0.01	0.24		0.0064	0.0058		<0.01	
	03/02/17	8270C	0.0061	<0.01			<0.02		0.0071		0.02			<0.01	<0.01*				0.0038	0.0061	0.12	0.16	<0.01	<0.01	0.27		0.0061	0.0052		<0.01	
	11/02/16	8270C	0.0055	<0.01			<0.02		0.0068		0.02			0.0073	<0.01*				0.0043	0.0082	0.15	0.17	<0.01	<0.01	0.25		0.008	0.0026		<0.01	
	09/11/16	8270C	0.0049	<0.01			<0.02		0.0036		0.017			0.0049	0.0025				<0.01	0.0052	0.14	0.16	<0.01	<0.01	0.22		0.0071	0.0037		0.0033	
	06/09/16	8270C		<0.05			<0.1		0.018		0.018			0.028					<0.05	<0.05	0.13	0.13	<0.05	<0.05	0.18		<0.05	<0.05*			
	02/29/16	8270C		<0.01			<0.02		<0.01*		0.026								0.008	0.0075	0.17	0.19	<0.01	<0.01	0.33		0.0086	<0.01*			
	11/03/15	8270C		<0.01			<0.02		<0.01*		0.019								<0.01	<0.01	0.15	0.16	<0.01	<0.01	0.27		<0.01	<0.01*			
	08/18/15	8270C		<0.01			<0.02		<0.01*		0.021								<0.01	<0.01	0.15	0.096	<0.01	<0.01	0.26		<0.01	<0.01*			
	06/04/15	8270C		<0.01			<0.02		<0.01*		0.015								<0.01	<0.01	0.12	0.076	<0.01	<0.01	0.19		<0.01	<0.01*			
	03/16/15	8270C		<0.01			<0.02		<0.01*		0.014								<0.01	<0.01	0.051	0.025	<0.01	<0.01	0.059		<0.01	<0.01*			
	11/13/14	8270C		<0.01			<0.02		<0.01*		0.017								<0.01	<0.01	0.061	0.047	<0.01	<0.01	0.08		<0.01	<0.01*			
	09/24/14[1]	8270C		<0.01			<0.02		<0.01*		<0.01								<0.01	<0.01	0.13	0.16	<0.02	<0.01	0.19		<0.01	<0.01*			
	06/04/14	8270C		<0.01			0.021		<0.01*		0.011								<0.01	<0.01	0.11	0.14	<0.02	<0.01	0.24		<0.01	<0.01*			
	04/11/14	8270C		<0.01			<0.02		<0.01*		0.017								<0.01	<0.01	0.12	0.16	<0.02	<0.01	0.23		<0.01	<0.01*			
MKTF-5			SPH Detected - No samples were collected.																												
MKTF-6			SPH Detected - No samples were collected.																												
MKTF-7			SPH Detected - No samples were collected.																												
MKTF-8			SPH Detected - No samples were collected.																												

8.17.4 MKTF WELLS

Semi-Volatile Organic Compound Analytical Result Summary

			PARAMETERS																												
		STANDARDS	Acenaphthene (mg/L)	Aniline (mg/L)	Anthracene (mg/L)	Benz(a) anthracene (mg/L)	Benzoic Acid (mg/L)	Benzyl alcohol (mg/L)	Bis(2-ethylhexyl) phthalate (mg/L)	Butyl benzyl phthalate (mg/L)	Carbazole (mg/L)	Chrysene (mg/L)	1,4-Dioxane (mg/L)	Di-n-octyl phthalate (mg/L)	Dibenzo furan (mg/L)	1,4-Dichloro benzene (mg/L)	Diethyl phthalate (mg/L)	Dimethyl phthalate (mg/L)	2,4-Dimethyl phenol (mg/L)	Fluorene (mg/L)	1-Methyl naphthalene (mg/L)	2-Methyl naphthalene (mg/L)	2-Methyl phenol (mg/L)	3+4-Methyl phenol (mg/L)	Naphthalene (mg/L)	Pentachloro phenol (mg/L)	Phenanthrene (mg/L)	Phenol (mg/L)	Pyrene (mg/L)	Pyridine (mg/L)	2,4,6-Trichlorophenol (mg/L)
WQCC 20 NMAC 6.2.3103 (DEC 2018)			NE	NE	NE	NE	NE	NE	NE	NE	NE	NE	NE	NE	NE	NE	NE	NE	NE	NE	NE	NE	NE	NE	**0.03**	**0.001**	NE	**0.005**	NE	NE	NE
40 CFR 141.61 MCL			NE	NE	NE	NE	NE	NE	**0.006**	NE	NE	NE	NE	NE	NE	**0.075**	NE	NE	NE	NE	NE	NE	NE	NE	NE	0.001	NE	NE	NE	NE	NE
NMED Tap Water (JUNE 2019)			**0.535**	NE	**1.72**	**0.00012**	NE	NE	0.0556	NE	NE	**0.0343**	**0.0046**	NE	NE	0.302	**14.8**	**0.612**	**0.354**	**0.288**	**0.0114**	**0.035**	NE	NE	0.00165	0.0004	**0.17**	5.76	**0.117**	NE	**0.0119**
EPA RSL for Tap Water (NOVEMBER 2019)			0.53	**0.13**	1.8	0.00003	**75**	**2**	0.056	**0.16**	NE	0.025	0.00046	**0.2**	**0.0079**	0.00048	15	NE	0.36	0.29	0.0011	0.036	**0.93**	**0.93**	0.00017	0.000041	NE	5.8	0.12	**0.02**	0.0041
Well ID	**DATE SAMPLED**	**METHOD**																													
MKTF-9	11/18/19	8270D	0.00656	<0.001			<0.001		<0.001		0.0183		**0.0118**	<0.001	0.00301			<0.001	0.00109	0.00918	**0.112**	0.0189	<0.001	<0.001	**0.0747**	*<0.001***	0.011	**0.0258**		<0.001	
	08/28/19	8270C	0.0053	<0.01			<0.02		*<0.01**		0.014			<0.01				<0.01	<0.01	0.0078	**0.081**	0.011	<0.01	<0.01	**0.054**	*<0.02**	0.0086	**0.014**		<0.01	
	05/13/19	8270C	0.0054	<0.01			<0.02		0.0051		0.011			<0.01				<0.01	<0.01	0.0089	**0.073**	0.01	<0.01	<0.01	**0.056**	*<0.02**	0.0066	**0.013**		<0.01	
	03/26/19	8270C	<0.01	<0.01			<0.02		*<0.01**		0.0093			<0.01				<0.01	<0.01	0.0081	**0.063**	0.015	<0.01	<0.01	**0.05**	*<0.02**	<0.01	**0.018**		<0.01	
	11/28/18	8270C	<0.01	<0.01			<0.02		*<0.01**		<0.01			<0.01				<0.01	<0.01	0.0066	**0.065**	0.013	<0.01	<0.01	**0.046**	*<0.02**	0.0075	**0.014**		<0.01	
	09/04/18	8270C	<0.01	<0.01			<0.02		*<0.01**		0.0096			<0.01				<0.01	<0.01	<0.01	**0.036**	<0.01	<0.01	<0.01	0.029	*<0.02**	<0.01	*<0.01**		<0.01	
	05/02/18	8270C	<0.01	<0.01			<0.02		*<0.01**		0.01			<0.01				<0.01	<0.01	<0.01	**0.054**	<0.01	<0.01	<0.01	**0.035**	*<0.02**	<0.01	**0.013**		<0.01	
	02/14/18	8270C	0.0058	<0.01			<0.02		*<0.01**		0.013			<0.01				<0.01	<0.01	0.0081	**0.07**	<0.01	<0.01	<0.01	**0.042**	*<0.02**	0.0073	**0.014**		<0.01	
	11/28/17	8270C	0.0059	<0.01			0.014		*<0.01**		0.015			<0.01				<0.01	<0.01	0.008	**0.077**	0.012	<0.01	<0.01	**0.042**	*<0.02**	0.0088	**0.018**		<0.01	
	09/28/17	8270C	0.0055	<0.01			<0.02		*<0.01**		0.015			<0.01				0.0049	<0.01	0.0085	**0.089**	<0.01	<0.01	<0.01	**0.043**	*<0.02**	0.0086	**0.012**		<0.01	
	06/12/17	8270C	0.0053	<0.01			<0.02		0.005		0.012			<0.01				<0.01	<0.01	0.0061	**0.059**	0.0079	<0.01	<0.01	**0.042**	*<0.02**	0.0072	**0.013**		<0.01	
	03/15/17	8270C	0.004	<0.01			<0.02		**0.0073**		0.011			0.0037				<0.01	<0.01	0.0049	**0.048**	0.0047	<0.01	<0.01	**0.032**	*<0.02**	0.0053	**0.005**		<0.01	
	11/02/16	8270C	0.0038	<0.01			<0.02		**0.0066**		0.01			0.007					<0.01	0.0061	**0.048**	<0.01	<0.01	<0.01	0.023	*<0.02**	0.0066	0.0025		<0.01	
	09/11/16	8270C	0.0046	<0.01			<0.02		0.0035		0.011			0.005					<0.01	0.0044	**0.064**	0.0052	<0.01	<0.01	0.023	**0.0094**	0.0065	**0.012**		0.0071	
	06/09/16	8270C	0.0034	<0.01			<0.02		0.0035		0.0088			0.0051					<0.01	<0.01	**0.046**	0.0051	<0.01	<0.01	0.018		0.0051	**0.0064**			
	02/29/16	8270C		<0.01			<0.02		*<0.01**		0.012								<0.01	<0.01	**0.069**	0.01	<0.01	<0.01	**0.032**		<0.01	*<0.01**			
	11/03/15	8270C		<0.01			<0.02		*<0.01**		0.013								<0.01	<0.01	**0.085**	0.011	<0.01	<0.01	**0.034**		<0.01	*<0.01**			
	08/18/15	8270C		<0.1			<0.02		*<0.01**		0.016								<0.01	<0.01	**0.08**	<0.01	<0.01	<0.01	0.023		0.011	*<0.01**			
	06/04/15	8270C		<0.1			<0.02		*<0.01**		0.01								<0.01	<0.01	**0.036**	<0.01	<0.01	<0.01	0.012		<0.01	*<0.01**			
	03/16/15	8270C		<0.01			<0.02		*<0.01**		<0.01								<0.01	<0.01	**0.027**	<0.01	<0.01	<0.01	<0.01		<0.01	*<0.01**			
	11/14/14	8270C		<0.01			<0.02		**0.011**		<0.01								<0.01	<0.01	**0.049**	<0.01	<0.01	<0.01	0.021		<0.01	*<0.01**			
	09/18/14	8270C		<0.01			<0.02		*<0.01**		0.01								<0.01	<0.01	**0.031**	<0.01	<0.02	<0.01	0.018		<0.01	*<0.01**			
	06/05/14	8270C		<0.01			<0.02		*<0.01**		0.01								<0.01	<0.01	**0.058**	0.014	<0.02	<0.01	**0.041**		<0.01	*<0.01**			
	04/14/14	8270C		<0.01			<0.02		*<0.01**		<0.01								<0.01	<0.01	**0.046**	0.01	<0.02	<0.01	**0.031**		<0.01	*<0.01**			
MKTF-10	10/30/19	8270D		<0.005			0.0454	<0.005	<0.005	<0.005	0.00452			<0.005				<0.005	0.0136	0.00252	**0.0566**	**0.0837**	<0.005	<0.005	**0.136**		0.00208	**0.00545**			
	08/22/19	8270C		<0.01			<0.02	<0.01	*<0.01**	<0.01	0.0031			<0.01				<0.01	0.023	<0.01	**0.054**	**0.076**	0.0092	0.0047	**0.16**		<0.01	**0.026**			
	05/13/19	8270C		<0.05			<0.1	<0.05	*<0.05**	<0.05	<0.05			<0.05				<0.05	0.017	0.015	**0.068**	**0.093**	<0.05	<0.05	**0.17**		<0.05	*<0.05**			
	03/26/19	8270C		<0.01			<0.02	<0.01	*<0.01**	<0.01	<0.01			<0.01				<0.01	0.011	<0.01	**0.039**	**0.052**	0.011	0.01	**0.098**		<0.01	**0.021**			
	11/20/18	8270C		<0.01			<0.02	<0.01	*<0.01**	<0.01	<0.01			<0.01				<0.01	0.014	<0.01	**0.034**	**0.051**	0.0085	0.0068	**0.098**		<0.01	**0.028**			
	09/04/18	8270C		<0.01			<0.02	<0.01	*<0.01**	<0.01	<0.01			<0.01				<0.01	0.013	<0.01	**0.05**	**0.064**	0.01	0.01	**0.13**		<0.01	**0.03**			
	05/02/18	8270C		<0.01			<0.02	<0.01	*<0.01**	<0.01	<0.01			<0.01				<0.01	0.017	<0.01	**0.042**	**0.055**	0.021	0.022	**0.11**		<0.01	**0.036**			
	02/14/18	8270C		<0.01			0.022	<0.01	*<0.01**	<0.01	<0.01			<0.01				<0.01	0.025	<0.01	**0.053**	**0.082**	0.036	0.037	**0.15**		<0.01	**0.042**			
	11/28/17	8270C		<0.05			0.06	<0.05	**1**	<0.05	<0.05			<0.05				<0.05	0.016	<0.05	**0.047**	**0.079**	0.024	0.028	**0.14**		<0.05	**0.031**			
	09/28/17	8270C		<0.1			0.065	<0.1	**0.082**	<0.1	<0.1			<0.1				0.061	<0.1	<0.1	*<0.1**	**0.042**	<0.1	<0.1	**0.11**		<0.1	*<0.1**			
	06/08/17	8270C		0.0049			<0.02	<0.01	*<0.01**	<0.01	<0.01			0.0048				<0.01	0.029	<0.01	**0.052**	**0.066**	0.073	0.098	**0.16**		<0.01	**0.049**			
	03/02/17	8270C		0.0067			<0.02	0.0045	**0.0067**	<0.01	0.0032			<0.01				<0.01	0.031	<0.01	**0.037**	**0.049**	0.083	0.13	**0.12**		<0.01	**0.05**			
	11/02/16	8270C		<0.05			0.056	<0.05	**0.034**	0.014	<0.05			0.037					0.039	<0.05	**0.047**	**0.07**	0.13	0.18	**0.15**		<0.05	**0.079**			
	09/11/16	8270C		0.06			0.05	0.0062	0.0037		0.0044			0.005					0.2	<0.01	**0.051**	**0.077**	0.69	**1.1**	**0.15**		<0.01	**0.26**			
	06/09/16	8270C		<0.05			<0.1		**0.018**		<0.05			0.025					0.21	<0.05	**0.056**	**0.072**	0.82	0.92	**0.15**		<0.05	**0.36**			
	02/29/16	8270C		0.042			<0.02		*<0.01**		<0.01								0.17	<0.01	**0.057**	**0.08**	0.77	**1**	**0.2**		<0.01	**0.67**			
	11/03/15	8270C		0.029			<0.02		*<0.01**		<0.01								0.093	<0.01	**0.06**	**0.069**	0.28	0.42	**0.14**		<0.01	**0.24**			
	08/18/15	8270C		0.06			<0.02		*<0.01**		<0.01								0.085	<0.01	**0.14**	**0.13**	0.45	0.65	**0.25**		<0.01	**0.41**			
	06/04/15	8270C		<0.01			<0.02		*<0.01**		<0.01								0.1	<0.01	**0.066**	**0.084**	0.35	0.54	**0.18**		<0.01	**0.28**			
	03/16/15	8270C		0.067			<0.02		*<0.01**		<0.01								0.11	<0.01	<0.01	**0.088**	0.53	0.63	**0.17**		<0.01	**0.42**			
	11/14/14	8270C		0.054			<0.02		**0.01**		<0.01								0.063	<0.01	**0.046**	**0.051**	0.33	0.4	**0.099**		<0.01	**0.29**			
	09/18/14	8270C		0.073			<0.02		*<0.01**		<0.01								0.09	<0.01	**0.036**	**0.042**	0.32	0.38	**0.098**		<0.01	**0.25**			
	06/06/14	8270C		0.075			<0.02		*<0.01**		<0.01								0.11	<0.01	**0.04**	**0.053**	0.49	0.61	**0.14**		<0.01	**0.37**			
	04/11/14	8270C		0.075			<0.023		*<0.012**		<0.012								0.12	<0.012	**0.042**	**0.056**	0.3	0.26	**0.14**		<0.012	**0.061**			

8.17.4 MKTF WELLS

Semi-Volatile Organic Compound Analytical Result Summary

			PARAMETERS																												
		STANDARDS	Acenaphthene (mg/L)	Aniline (mg/L)	Anthracene (mg/L)	Benz(a) anthracene (mg/L)	Benzoic Acid (mg/L)	Benzyl alcohol (mg/L)	Bis(2-ethylhexyl) phthalate (mg/L)	Butyl benzyl phthalate (mg/L)	Carbazole (mg/L)	Chrysene (mg/L)	1,4-Dioxane (mg/L)	Di-n-octyl phthalate (mg/L)	Dibenzo furan (mg/L)	1,4-Dichloro benzene (mg/L)	Diethyl phthalate (mg/L)	Dimethyl phthalate (mg/L)	2,4-Dimethyl phenol (mg/L)	Fluorene (mg/L)	1-Methyl naphthalene (mg/L)	2-Methyl naphthalene (mg/L)	2-Methyl phenol (mg/L)	3+4-Methyl phenol (mg/L)	Naphthalene (mg/L)	Pentachloro phenol (mg/L)	Phenanthrene (mg/L)	Phenol (mg/L)	Pyrene (mg/L)	Pyridine (mg/L)	2,4,6-Trichlorophenol (mg/L)
		WQCC 20 NMAC 6.2.3103 (DEC 2018)	NE	NE	NE	NE	NE	NE	NE	NE	NE	NE	NE	NE	NE	NE	NE	NE	NE	NE	NE	NE	NE	NE	0.03	0.001	NE	0.005	NE	NE	NE
		40 CFR 141.61 MCL	NE	NE	NE	NE	NE	NE	0.006	NE	NE	NE	NE	NE	NE	0.075	NE	NE	NE	NE	NE	NE	NE	NE	NE	0.001	NE	NE	NE	NE	NE
		NMED Tap Water (JUNE 2019)	0.535	NE	1.72	0.00012	NE	NE	0.0556	NE	NE	0.0343	0.0046	NE	NE	0.302	14.8	0.612	0.354	0.288	0.0114	0.035	NE	NE	0.00165	0.0004	0.17	5.76	0.117	NE	0.0119
		EPA RSL for Tap Water (NOVEMBER 2019)	0.53	0.13	1.8	0.00003	75	2	0.056	0.16	NE	0.025	0.00046	0.2	0.0079	0.00048	15	NE	0.36	0.29	0.0011	0.036	0.93	0.93	0.00017	0.000041	NE	5.8	0.12	0.02	0.0041
Well ID	DATE SAMPLED	METHOD																													
MKTF-11	10/30/19	8270D		0.0092			<0.005		0.0024	<0.005	0.00195		0.00852	<0.005				<0.005	0.0192	<0.005	0.011	0.0114	0.0206	0.0172	0.0493		<0.005	0.0177			
	08/21/19	8270C		<0.01			<0.02	<0.01	<0.01*	<0.01	<0.01			<0.01				<0.01	0.0061	<0.01	0.0098	0.0073	0.031	0.024	0.036		<0.01	0.023			
	05/13/19	8270C		0.0049			<0.02	0.0026	<0.01*	<0.01	<0.01			<0.01				<0.01	0.015	0.0031	0.011	0.0083	0.04	0.046	0.032		<0.01	0.024			
	03/26/19	8270C		0.0079			<0.02		<0.01*	<0.01	<0.01			<0.01				<0.01	0.024	<0.01	0.01	0.011	0.071	0.087	0.038		<0.01	0.038			
	11/20/18	8270C		0.0092			<0.02		<0.01*	<0.01	<0.01			<0.01				<0.01	0.028	<0.01	0.0084	0.0091	0.098	0.1	0.038		<0.01	0.092			
	09/04/18	8270C		0.011			<0.02		<0.01*	<0.01	<0.01			<0.01				<0.01	0.038	<0.01	0.0099	0.011	0.11	0.12	0.047		<0.01	0.056			
	05/02/18	8270C		0.012			0.016		<0.01*	<0.01	<0.01			<0.01				<0.01	0.033	<0.01	0.0099	0.0091	0.12	0.15	0.039		<0.01	0.052			
	02/08/18	8270C		0.02			<0.02		<0.01*	<0.01	<0.01			<0.01				<0.01	0.054	<0.01	0.017	0.012	0.2	0.26	0.054		<0.01	0.08			
	11/28/17	8270C		0.021			<0.02		<0.01*	<0.01	<0.01			<0.01				<0.01	0.055	<0.01	0.014	0.012	0.22	0.27	0.045		<0.01	0.088			
	09/26/17	8270C		0.026			<0.02		<0.01*	<0.01	<0.01			<0.01				<0.01	0.086	<0.01	0.013	0.013	0.33	0.39	0.044		<0.01	0.094			
	06/08/17	8270C		0.014			<0.02		0.0058	<0.01	<0.01			<0.01				<0.01	0.062	<0.01	0.011	0.0084	0.21	0.23	0.031		<0.01	0.073			
	03/02/17	8270C		<0.01			0.011		0.0076	<0.01	<0.01			<0.01				<0.01	0.013	<0.01	0.0092	0.0069	0.04	0.031	0.024		<0.01	0.015			
	11/02/16	8270C		0.007			<0.02		0.0064	0.0027	0.0024			0.0072				<0.01	0.013	<0.01	0.015	0.0095	0.096	0.089	0.034		<0.01	0.04			
	09/11/16	8270C		0.0093			<0.02		0.0037		<0.01			0.0037				0.0029	0.042	<0.01	0.012	0.009	0.13	0.12	0.03		<0.01	0.049			
	06/09/16	8270C		0.0037			<0.02		0.0032		<0.01			0.0048					0.022	<0.01	0.015	0.01	0.088	0.063	0.033		<0.01	0.045			
	02/29/16	8270C		0.011			<0.02		<0.01*		<0.01								0.018	<0.01	0.014	0.011	0.084	0.049	0.038		<0.01	0.029			
	11/03/15	8270C		0.038			<0.02		<0.01*		<0.01								0.11	<0.01	0.022	0.023	0.3	0.27	0.073		<0.01	0.09			
	08/18/15	8270C		<0.01			<0.029		<0.01*		<0.01								0.015	<0.01	0.01	<0.01	0.049	0.029	0.017		<0.01	0.027			
	06/04/15	8270C		0.046			<0.02		<0.01*		<0.01								0.14	<0.01	0.02	0.021	0.3	0.23	0.07		<0.01	0.053			
	03/16/15	8270C		0.044			<0.02		<0.01*		<0.01								0.11	<0.01	0.025	0.02	0.27	0.24	0.069		<0.01	0.052			
	11/13/14	8270C		<0.01			<0.02		0.014		<0.01								0.012	<0.01	0.015	<0.01	0.07	0.046	0.031		<0.01	0.02			
	09/24/14[1]	8270C		0.027			<0.02		<0.1*		<0.01								0.19	<0.01	0.024	0.022	0.35	0.24	0.067		<0.01	0.078			
	06/05/14	8270C		0.025			<0.02		<0.01*		<0.01								0.092	<0.01	0.011	<0.01	0.18	0.13	0.046		<0.01	0.032			
	04/11/14	8270C		0.023			<0.02		<0.01*		<0.01								0.078	<0.01	0.012	<0.01	0.16	0.11	0.038		<0.01	0.021			
MKTF-12			SPH Detected - No samples were collected.																												
MKTF-13	10/29/19	8270D	0.00258	<0.005	<0.005	<0.005*	<0.005	<0.005	<0.005	<0.005	<0.005		<0.01*	<0.005				<0.005	0.0146	0.00724	0.0733	0.0994	<0.005	<0.005	0.13		0.00784	0.0379	<0.005		
	08/20/19	--	SPH Detected - No samples were collected.																												
	05/09/19	8270C		<0.05		<0.05*	<0.1	<0.05	0.025	<0.05	<0.05			<0.05				<0.05	<0.05	0.044	0.23	0.18	<0.05	<0.05	0.14		0.048	<0.05*	0.019		
	03/26/19	8270C		<0.05		<0.05*	0.073	<0.05	<0.05*	<0.05	<0.05			<0.05				<0.05	<0.05	<0.05	0.072	0.08	<0.05	<0.05	0.096		<0.05	0.038			
	11/28/18	8270C		<0.01		<0.01*	<0.02	<0.01	<0.01*	<0.01	<0.01			<0.01				<0.01	0.021	0.0076	0.091	0.1	0.0071	0.0099	0.15		0.0063	0.045			
	08/30/18	8270C		<0.01		<0.01*	<0.02	<0.01	<0.01*	<0.01	<0.01			<0.01				<0.01	<0.01	<0.01	0.041	0.046	<0.01	<0.01	0.057		<0.01	<0.01*			
	05/10/18	8270C		<0.01		<0.01*	<0.02	<0.01	<0.01*	<0.01	<0.01			<0.01				<0.01	0.014	<0.01	0.074	0.085	<0.01	0.006	0.12		<0.01	0.03			
	03/15/17	8270C		<0.01		<0.01*	<0.02	<0.01	0.0071	<0.01	<0.01			0.0035				<0.01	0.0067	0.0034	0.045	0.063	<0.01	0.0034	0.084		0.003	0.0082			
MKTF-14			SPH Detected - No samples were collected.																												
MKTF-15	10/30/19	--	SPH Detected - No samples were collected.																												
	08/21/19	--	SPH Detected - No samples were collected.																												
	05/13/19	8270C		<0.05		<0.05*	<0.1	0.014	<0.05*	<0.05	<0.05			<0.05				<0.05	0.04	<0.05	0.016	0.016	0.18	0.026	0.058		<0.05	0.067	<0.05	<0.05*	
	03/25/19	--	SPH Detected - No samples were collected.																												
	11/19/18	--	SPH Detected - No samples were collected.																												
	08/28/18	8270C		<0.01		<0.01*	<0.02	<0.01	<0.01*	<0.01	<0.01			<0.01				<0.01	0.059	<0.01	0.014	0.014	0.37	0.17	0.05		<0.01	0.44	<0.01	<0.01	
	05/02/18	8270C		<0.05		<0.05*	0.13	<0.05	<0.05*	<0.05	<0.05			<0.05				<0.05	0.07	<0.05	<0.05*	<0.05*	0.35	0.23	0.044		<0.05	0.66	<0.05	<0.05*	
	11/28/17	8270C		0.041		0.054	0.051	<0.1	<0.1*	<0.1	<0.1			<0.1				<0.1	0.067	<0.1	<0.1*	<0.1*	0.38	0.34	0.72		0.054	0.71	0.062	<0.1*	
	06/08/17	8270C		0.052		<0.05*	<0.1	<0.05	<0.05*	<0.05	<0.05			<0.05				<0.05	0.088	<0.05	<0.05*	<0.05*	0.25	0.19	0.042		<0.05	0.14	<0.05	<0.05*	
	03/02/17	8270C		<0.01		<0.01*	0.021	0.0049	0.0076	<0.01	0.0032			<0.01				<0.01	0.055	<0.01	0.016	0.017	0.28	0.29	0.06		<0.01	<0.01*	<0.01	<0.01	
	11/02/16	8270C		<0.05			0.065		0.035	0.013	<0.05			0.036				<0.05	0.079	<0.05	<0.05*	<0.05*	0.46	0.55	0.059		<0.05	2			
	09/11/16	8270C		<0.01			0.011		0.0031		0.004			0.0045				0.017	0.23	<0.01	0.013	0.014	1.8	2.6	0.053		<0.01	5.8			
	06/09/16	--	SPH Detected - No samples were collected.																												
	03/16/16	--	SPH Detected - No samples were collected.																												
	1Q & 2Q 2015	--	SPH Detected - No samples were collected.																												
	11/14/14	--	SPH Detected - No samples were collected.																												
	09/17/14	8270C		<0.01			<0.02		<0.01*		<0.01								0.013	<0.01	0.035	0.033	0.024	<0.01	0.048		<0.01	<0.01*			
	06/05/14	8270C		<0.01			0.023		<0.01*		<0.01								0.013	<0.01	0.021	0.021	0.028	<0.01	0.05		<0.01	<0.01*			
	04/10/14	8270C		<0.012			<0.025		<0.012*		<0.012								0.016	<0.012	0.02	0.021	0.043	<0.012	0.048		<0.012	0.015			

8.17.4 MKTF WELLS

Semi-Volatile Organic Compound Analytical Result Summary

			PARAMETERS																											
		STANDARDS	Acenaphthene (mg/L)	Aniline (mg/L)	Anthracene (mg/L)	Benz(a) anthracene (mg/L)	Benzoic Acid (mg/L)	Benzyl alcohol (mg/L)	Bis(2-ethylhexyl) phthalate (mg/L)	Butyl benzyl phthalate (mg/L)	Carbazole (mg/L)	Chrysene (mg/L)	1,4-Dioxane (mg/L)	Di-n-octyl phthalate (mg/L)	Dibenzo furan (mg/L)	1,4-Dichloro benzene (mg/L)	Diethyl phthalate (mg/L)	Dimethyl phthalate (mg/L)	2,4-Dimethyl phenol (mg/L)	Fluorene (mg/L)	1-Methyl naphthalene (mg/L)	2-Methyl naphthalene (mg/L)	2-Methyl phenol (mg/L)	3+4-Methyl phenol (mg/L)	Naphthalene (mg/L)	Pentachloro phenol (mg/L)	Phenanthrene (mg/L)	Phenol (mg/L)	Pyrene (mg/L)	Pyridine (mg/L)	2,4,6-Trichlorophenol (mg/L)
		WQCC 20 NMAC 6.2.3103 (DEC 2018)	NE	NE	NE	NE	NE	NE	NE	NE	NE	NE	NE	NE	NE	NE	NE	NE	NE	NE	NE	NE	NE	NE	0.03	0.001	NE	0.005	NE	NE	NE
		40 CFR 141.61 MCL	NE	NE	NE	NE	NE	NE	0.006	NE	NE	NE	NE	NE	NE	0.075	NE	NE	NE	NE	NE	NE	NE	NE	NE	0.001	NE	NE	NE	NE	NE
		NMED Tap Water (JUNE 2019)	0.535	NE	1.72	0.00012	NE	NE	0.0556	NE	NE	0.0343	0.0046	NE	NE	0.302	14.8	0.612	0.354	0.288	0.0114	0.035	NE	NE	0.00165	0.0004	0.17	5.76	0.117	NE	0.0119
		EPA RSL for Tap Water (NOVEMBER 2019)	0.53	0.13	1.8	0.00003	75	2	0.056	0.16	NE	0.025	0.00046	0.2	0.0079	0.00048	15	NE	0.36	0.29	0.0011	0.036	0.93	0.93	0.00017	0.000041	NE	5.8	0.12	0.02	0.0041
Well ID	DATE SAMPLED	METHOD																												
MKTF-16	10/30/19	8270D		<0.005			<0.005		<0.005	<0.005	0.00236		0.0532	<0.005					0.0127	0.00136	0.025	0.0314	<0.005	<0.005	0.119		<0.005	0.0438			
	08/22/19	8270C		<0.01			<0.02		<0.01*	<0.01	<0.01			0.0047					<0.01	<0.01	<0.01	<0.01	<0.01	0.0058	<0.01		<0.01	0.034			
	05/14/19	8270C		<0.01			<0.02		<0.01*	<0.01	<0.01			<0.01					0.013	<0.01	0.019	0.015	0.0064	0.0043	0.058		<0.01	0.13			
	02/20/19	8270C		<0.01			0.02		<0.01*	<0.01	<0.01			<0.01					0.012	<0.01	0.028	0.025	0.0094	<0.01	0.1		<0.01	0.064			
	11/29/18	8270C		<0.01			0.032		<0.01*	<0.01	<0.01			<0.01					0.017	<0.01	0.014	0.018	0.013	<0.01	0.062		<0.01	0.15			
	08/31/18	8270C		<0.01			0.025		<0.01*	<0.01	<0.01			<0.01					0.043	<0.01	0.017	0.011	0.015	<0.01	0.072		<0.01	0.33			
	05/11/18	8270C		<0.01			0.041		<0.01*	<0.01	<0.01			<0.01					0.0037	<0.01	0.022	0.016	0.012	0.0058	0.063		<0.01	0.29			
	02/15/18	8270C		<0.01			0.0077		<0.01*	<0.01	<0.01			<0.01					0.0036	<0.01	<0.01	<0.01	<0.01	0.0063	<0.01		<0.01	0.062			
	11/29/17	8270C		<0.05			0.05		0.035	<0.05	<0.05			<0.05					0.059	<0.05	0.026	0.023	0.029	0.016	0.09		<0.05	0.49			
	09/26/17	8270C		<0.05			0.051		<0.05*	<0.05	<0.05			<0.05					0.05	<0.05	0.018	0.026	0.036	<0.05	0.1		<0.05	0.11			
	06/08/17	8270C		<0.01			0.016		0.0062	<0.01	<0.01			<0.01					0.11	<0.01	0.034	0.025	0.024	0.0081	0.094		<0.01	0.45			
	03/14/17	8270C		0.0038			<0.02		0.0068	<0.01	0.003			0.0035					0.034	<0.01	0.026	0.026	0.035	0.0028	0.098		<0.01	0.029			
	11/03/16	8270C		<0.01			0.038		0.0069	0.0027	<0.01			0.0074					0.059	0.0035	0.04	0.037	0.026	0.003	0.13		<0.01	0.18			
	09/12/16	8270C		0.0056			0.024		0.004		0.0036			0.0036					0.084	<0.01	0.046	0.051	0.071	<0.01	0.13		<0.01	0.14			
	06/09/16	8270C		<0.05			<0.1		0.019		<0.05			0.025					0.083	<0.05	0.035	0.038	0.061	<0.05	0.1		<0.05	0.17			
	02/29/16	8270C		0.011			<0.02		<0.01*		<0.01								0.091	<0.01	0.033	0.042	0.079	<0.01	0.11		<0.01	0.03			
	11/03/15	8270C		0.02			<0.02		<0.01*		<0.01								0.12	<0.01	0.035	0.046	0.081	<0.01	0.13		<0.01	0.057			
	08/23/15	8270C		0.025			<0.02		<0.01*		<0.01								0.13	<0.01	0.044	0.055	0.1	0.015	0.16		<0.01	0.042			
	06/08/15	8270C		0.021			<0.02		<0.01*		<0.01								0.18	<0.01	0.042	0.046	0.12	<0.1	0.14		<0.01	0.048			
	03/16/15	8270C		0.02			<0.02		<0.01*		<0.01								0.19	<0.01	0.045	0.053	0.15	<0.01	0.15		<0.01	0.031			
	11/18/14	8270C		0.018			<0.02		0.014		<0.01								0.08	<0.01	0.047	0.051	0.14	0.016	0.13		<0.01	0.038			
	09/17/14	8270C		0.024			<0.02		<0.01*		<0.01								0.18	<0.01	0.053	0.062	0.15	0.03	0.18		<0.01	0.031			
	06/16/14 [1]	8270C		0.011			<0.02		<0.01*		<0.01								0.17	<0.01	0.037	0.042	0.22	0.16	0.14		<0.01	0.42			
	04/10/14	8270C		0.015			<0.02		<0.01*		<0.01								0.2	<0.01	0.035	0.044	0.16	0.091	0.13		<0.01	0.09			
MKTF-17	10/29/19	8270D		<0.01			<0.005		<0.01*	<0.01	<0.01		<0.01*	<0.01					0.3	0.00241	0.00222	0.00671	0.709	0.675	0.0656		<0.01	0.0995			
	08/20/19	8270C		<0.01			<0.02		<0.01*	<0.01	<0.01			<0.01					<0.01	<0.01	0.017	<0.01	<0.01	<0.01	0.022		<0.01	<0.01*			
	05/09/19	8270C		<0.01			<0.02		<0.01*	<0.01	<0.01			<0.01					0.0076	0.0045	0.037	0.021	<0.01	<0.01	0.11		<0.01	0.021			
	03/26/19	8270C		<0.01			0.012		<0.01*	<0.01	<0.01			<0.01					<0.01	<0.01	<0.01	<0.01	<0.01	<0.01	<0.01		<0.01	<0.01*			
	11/28/18	8270C		<0.01			0.018		<0.01*	<0.01	<0.01			<0.01					<0.01	<0.01	<0.01	<0.01	<0.01	<0.01	<0.01		<0.01	<0.01*			
	08/24/18	8270C		<0.01			<0.02		<0.01*	<0.01	<0.01			<0.01					<0.01	<0.01	<0.01	<0.01	<0.01	<0.01	<0.01		<0.01	<0.01*			
	05/04/18	8270C		<0.01			0.011		<0.01*	<0.01	<0.01			<0.01					<0.01	<0.01	<0.01	<0.01	<0.01	<0.01	<0.01		<0.01	<0.01*			
	02/16/18	8270C		<0.01			<0.02		<0.01*	<0.01	<0.01			<0.01					<0.01	<0.01	<0.01	<0.01	<0.01	<0.01	0.0061		<0.01	0.0071			
	12/01/17	8270C		<0.01			<0.02		<0.01*	<0.01	<0.01			<0.01					<0.01	<0.01	<0.01	<0.01	<0.01	<0.01	0.0033		<0.01	<0.01*			
	09/26/17	8270C		<0.01			<0.02		0.31	<0.01	<0.01			<0.01					<0.01	0.0046	0.01	<0.01	<0.01	<0.01	0.008		<0.01	<0.01*			
	06/14/17	8270C		<0.01			<0.02		0.005	<0.01	<0.01			<0.01					<0.01	<0.01	0.018	<0.01	<0.01	<0.01	0.027		<0.01	0.0055			
	03/15/17	8270C		<0.01			<0.02		0.007	<0.01	<0.01			0.0035					<0.01	<0.01	<0.01	<0.01	<0.01	<0.01	0.0049		<0.01	0.005			
	11/08/16	8270C		<0.01			<0.02		0.0069	0.0027	<0.01			0.007					<0.01	0.003	0.011	<0.01	<0.01	<0.01	0.0077		<0.01	0.0035			
	09/13/16	8270C		<0.01			<0.02		0.0038		<0.01			<0.01					<0.01	<0.01	0.0063	<0.01	<0.01	<0.01	0.0064		<0.01	0.0029			
	06/10/16	8270C		<0.01			<0.02		<0.01*		<0.01			0.005					0.0044	<0.01	0.026	<0.01	<0.01	<0.01	0.062		<0.01	0.0098			
	02/26/16	8270C		<0.01			<0.02		<0.01*		<0.01								<0.01	<0.01	<0.01	<0.01	<0.01	<0.01	<0.01		<0.01	<0.01*			
	11/03/15	8270C		<0.01			<0.02		<0.01*		<0.01								<0.01	<0.01	<0.01	<0.01	<0.01	<0.01	<0.01		<0.01	<0.01*			
	08/18/15	8270C		<0.01			<0.02		<0.01*		<0.01								<0.01	<0.01	<0.01	<0.01	<0.02	<0.01	<0.01		<0.01	<0.01*			
	06/08/15	8270C		<0.01			<0.02		<0.01*		<0.01								<0.01	<0.01	<0.01	<0.01	<0.02	<0.01	<0.01		<0.01	<0.01*			
	03/12/15	8270C		<0.01			<0.02		<0.01*		<0.01								<0.01	<0.01	<0.01	<0.01	<0.02	<0.01	<0.01		<0.01	<0.01*			
	11/18/14	8270C		<0.01			<0.02		0.01		<0.01								<0.01	<0.01	<0.01	<0.01	<0.02	<0.01	<0.01		<0.01	<0.01*			
	09/18/14	8270C		<0.01			<0.02		<0.01*		<0.01								<0.01	<0.01	<0.01	<0.01	<0.02	<0.01	<0.01		<0.01	<0.01*			
	09/18/14	8270C		<0.01			<0.02		<0.01*		<0.01								<0.02	<0.01	<0.01	<0.01	<0.02	<0.01	<0.01		<0.01	<0.01*			
	06/16/14	8270C		<0.01			<0.02		<0.01*		<0.01								<0.01	<0.01	<0.01	<0.01	<0.02	<0.01	<0.01		<0.01	0.039			
	04/09/14	8270C		<0.01			<0.02		<0.01*		<0.01								<0.01	<0.01	<0.01	<0.01	<0.02	<0.01	0.024		<0.01	<0.01*			

8.17.4 MKTF WELLS

Semi-Volatile Organic Compound Analytical Result Summary

			PARAMETERS																												
			Acenaphthene (mg/L)	Aniline (mg/L)	Anthracene (mg/L)	Benz(a) anthracene (mg/L)	Benzoic Acid (mg/L)	Benzyl alcohol (mg/L)	Bis(2-ethylhexyl) phthalate (mg/L)	Butyl benzyl phthalate (mg/L)	Carbazole (mg/L)	Chrysene (mg/L)	1,4-Dioxane (mg/L)	Di-n-octyl phthalate (mg/L)	Dibenzo furan (mg/L)	1,4-Dichloro benzene (mg/L)	Diethyl phthalate (mg/L)	Dimethyl phthalate (mg/L)	2,4-Dimethyl phenol (mg/L)	Fluorene (mg/L)	1-Methyl naphthalene (mg/L)	2-Methyl naphthalene (mg/L)	2-Methyl phenol (mg/L)	3+4-Methyl phenol (mg/L)	Naphthalene (mg/L)	Pentachloro phenol (mg/L)	Phenanthrene (mg/L)	Phenol (mg/L)	Pyrene (mg/L)	Pyridine (mg/L)	2,4,6-Trichlorophenol (mg/L)
STANDARDS																															
WQCC 20 NMAC 6.2.3103 (DEC 2018)			NE	NE	NE	NE	NE	NE	NE	NE	NE	NE	NE	NE	NE	NE	NE	NE	NE	NE	NE	NE	NE	NE	0.03	0.001	NE	0.005	NE	NE	NE
40 CFR 141.61 MCL			NE	NE	NE	NE	NE	NE	0.006	NE	NE	NE	NE	NE	NE	0.075	NE	NE	NE	NE	NE	NE	NE	NE	NE	NE	0.001	NE	NE	NE	NE	NE
NMED Tap Water (JUNE 2019)			0.535	NE	1.72	0.00012	NE	NE	0.0556	NE	NE	0.0343	0.0046	NE	NE	0.302	14.8	0.612	0.354	0.288	0.0114	0.035	NE	NE	0.00165	0.0004	0.17	5.76	0.117	NE	0.0119
EPA RSL for Tap Water (NOVEMBER 2019)			0.53	0.13	1.8	0.00003	75	2	0.056	0.16	NE	0.025	0.00046	0.2	0.0079	0.00048	15	NE	0.36	0.29	0.0011	0.036	0.93	0.93	0.00017	0.000041	NE	5.8	0.12	0.02	0.0041
Well ID	DATE SAMPLED	METHOD																													
MKTF-18	10/29/19	8270D	0.00694	<0.001	<0.001		<0.005		<0.001	<0.001	0.00178		0.0103	<0.001	0.0027			<0.001	<0.001	0.00694	0.0814	0.0257	<0.001	<0.001	0.0176		0.00444	0.0018			
	08/19/19	--	SPH Detected - No samples were collected.																												
	05/16/19	8270C	0.0072	<0.02			<0.04		<0.02*	<0.02	<0.02			<0.02	<0.02*			<0.02	<0.02	0.011	0.08	0.02	<0.02	<0.02	0.012		<0.02	<0.02*			
	03/26/19	8270C	<0.01	<0.01			<0.02		<0.01*	<0.01	<0.01			<0.01	<0.01*			<0.01	<0.01	<0.01	<0.01	<0.01	<0.01	<0.01	<0.01		<0.01	<0.01*			
	11/28/18	8270C	<0.01	<0.01			0.017		<0.01*	<0.01	<0.01			<0.01	0.0051			<0.01	<0.01	0.007	<0.01	<0.01	<0.01	<0.01	<0.01		<0.01	<0.01*			
	08/24/18	8270C	<0.01	<0.01			0.012		<0.01*	<0.01	<0.01			<0.02	<0.03*			<0.01	<0.01	<0.01	0.08	0.025	<0.01	<0.01	0.02		<0.01	<0.01*			
	05/04/18	8270C	<0.01	<0.01			0.016		<0.01*	<0.01	<0.01			<0.01	<0.01*			<0.01	<0.01	<0.01	0.043	0.014	<0.01	<0.01	0.01		<0.01	<0.01*			
	02/16/18	8270C	<0.01	<0.01			<0.02		<0.01*	<0.01	<0.01			<0.01	<0.01*			<0.01	<0.01	0.0082	0.087	0.025	<0.01	<0.01	0.02		0.005	<0.01*			
	06/14/17	8270C	0.0085	<0.01			<0.02		<0.01*	<0.01	<0.01			<0.01	0.0051			<0.01	<0.01	0.007	0.079	0.023	<0.01	<0.01	0.019		0.008	<0.01*			
	03/01/17	8270C	0.0055	<0.01			<0.02		0.0075	<0.01	0.0026			<0.01	<0.01*			0.0032	<0.01	0.0062	0.063	0.024	<0.01	<0.01	0.017		0.0049	<0.01*			
	11/08/16	8270C	0.0056	<0.01			<0.02		0.0065	0.0026	<0.01			0.0069					<0.01	0.0071	0.057	0.02	<0.01	<0.01	0.018		0.0037	<0.01*			
	09/13/16	8270C	0.0043	<0.01			0.0064		<0.01*		<0.01			<0.01					<0.01	0.006	0.049	0.02	<0.01	<0.01	0.014		0.0036	<0.01*			
	06/10/16	8270C	0.0055	<0.01			<0.02		<0.01*		<0.01			0.0049					<0.01	0.0041	0.054	0.014	<0.01	<0.01	0.013		0.0037	<0.01*			
	02/26/16	8270C		<0.01			<0.02		<0.01*		<0.01								<0.01	<0.01	0.06	0.017	<0.01	<0.01	0.016		<0.01	<0.01*			
	11/03/15	8270C		<0.01			<0.02		<0.01*		<0.01								<0.01	<0.01	0.079	0.017	<0.01	<0.01	0.023		<0.01	<0.01*			
	08/18/15	8270C		<0.01			<0.02		<0.01*		<0.01								<0.01	0.011	0.14	0.042	<0.01	<0.01	0.042		0.012	<0.01*			
	06/08/15	8270c		<0.01			<0.02		<0.01*		<0.01								<0.01	<0.01	0.077	0.013	<0.01	<0.01	0.029		<0.01	<0.01*			
	03/17/15	8270C		<0.01			<0.02		<0.01*		<0.01								<0.01	<0.01	0.1	0.028	<0.01	<0.01	0.032		<0.01	<0.01*			
	11/18/14	8270C		<0.01			<0.02		0.012		<0.01								<0.02	<0.01	0.11	0.036	<0.01	<0.01	0.055		<0.01	<0.01*			
	09/18/14	8270C		<0.01			<0.02		<0.01*		<0.01								<0.01	<0.01	0.12	0.023	<0.02	<0.01	0.059		<0.01	<0.01*			
	06/06/14	8270C		<0.014			<0.029		<0.014*		<0.014								<0.014	<0.014	0.064	<0.014	<0.029	<0.014	0.026		<0.014	<0.01*4			
	04/14/14	8270C		<0.01			<0.02		<0.01*		<0.01								<0.01	<0.01	0.11	0.035	<0.02	<0.01	0.061		<0.01	<0.01*			
MKTF-19	10/29/19	8270D	0.00471	<0.005			<0.005		<0.005		0.00855		0.0426	<0.005				<0.005	0.00441	0.00671	0.148	0.226	<0.005	<0.005	0.308		0.00575	0.0268	<0.005		
	08/19/19	8270C	0.0053	<0.01			<0.02		<0.01*		0.011			<0.01				<0.01	<0.01	0.0071	0.16	0.32	<0.01	<0.01	0.45		0.0059	<0.01*	<0.01		
	05/09/19	8270C	0.0057	<0.01			<0.02		0.0049		0.01			<0.01				<0.01	<0.01	0.0088	0.15	0.23	<0.01	<0.01	0.32		0.0055	0.011	<0.01		
	03/26/19	8270C	<0.01	<0.01			<0.02		<0.01*		<0.01			<0.01				<0.01	<0.01	0.0077	0.12	0.18	<0.01	<0.01	0.34		<0.01	0.016	<0.01		
	11/28/18	8270C	<0.01	<0.01			<0.02		<0.01*		0.008			<0.01				<0.01	<0.01	<0.01	0.12	0.21	<0.01	<0.01	0.4		<0.01	0.011	<0.01		
	08/24/18	8270C	<0.01	<0.01			<0.02		<0.01*		0.0078			<0.01				<0.01	0.0074	<0.01	0.14	0.23	<0.01	<0.01	0.31		<0.01	0.015	<0.01		
	05/04/18	8270C	<0.01	<0.01			<0.02		<0.01*		<0.01			<0.01				<0.01	<0.01	<0.01	0.091	0.17	<0.01	<0.01	0.24		<0.01	0.013	<0.01		
	02/16/18	8270C	0.0049	<0.01			<0.02		<0.01*		<0.01			<0.01				<0.01	0.0041	0.0065	0.12	0.22	<0.01	<0.01	0.31		<0.01	0.014	<0.01		
	12/01/17	8270C	<0.01	<0.01			<0.02		<0.01*		<0.01			<0.01				<0.01	<0.01	<0.01	0.18	0.27	<0.01	<0.01	0.34		<0.01	<0.01*	<0.01		
	09/26/17	8270C	<0.01	<0.01			<0.02		0.0097		0.0055			<0.01				<0.01	0.003	0.0043	0.1	0.16	<0.01	<0.01	0.21		<0.01	0.0091	<0.01		
	06/14/17	8270C	0.0042	<0.01			<0.02		0.0051		0.0062			<0.01				<0.01	0.006	0.0045	0.11	0.16	<0.01	<0.01	0.28		0.0055	0.015	<0.01		
	03/15/17	8270C	0.0036	<0.01			<0.02		0.0073		0.0046			0.0034				<0.01	0.0052	0.0039	0.088	0.12	<0.01	0.0024	0.21		0.0031	0.0079	<0.01		
	11/08/16	8270C	0.005	<0.01			<0.02		0.0073		0.006			0.008				0.0035	0.0056	0.0073	0.12	0.18	<0.01	<0.01	0.27		0.0055	0.0066	0.0044		
	09/13/16	8270C	0.0048	<0.01			<0.02		<0.01*		0.0052			<0.01				0.0059	0.0043	0.0069	0.11	0.14	<0.01	<0.01	0.24		0.0043	0.0062			
	06/10/16	8270C	0.0058	<0.01			<0.02		0.0035		0.0072			0.0051					<0.01	0.0044	0.12	0.16	<0.01	<0.01	0.24		0.0046	0.007			
	02/25/16	8270C		<0.01			<0.02		<0.01*		0.01								<0.01	<0.01	0.15	0.24	<0.01	<0.01	0.35		<0.01	0.01			
	11/03/15	8270C		<0.01			<0.02		<0.01*		<0.01								<0.01	<0.01	0.16	0.29	<0.01	<0.01	0.37		<0.01	0.021			
	08/18/15	8270C		<0.01			<0.02		<0.01*		0.01								<0.01	<0.01	0.18	0.3	<0.01	<0.01	0.4		<0.01	<0.01*			
	06/08/15	8270C		<0.01			<0.02		<0.01*		<0.01								<0.01	<0.01	0.14	0.21	<0.01	<0.01	0.31		<0.01	0.013			
	03/12/15	8270C		<0.01			<0.02		<0.01*		<0.01								<0.01	<0.01	0.17	0.27	<0.01	<0.01	0.34		<0.01	0.015			
	11/18/14	8270C		<0.01			<0.02		0.011		<0.01								<0.01	<0.01	0.11	0.033	<0.01	<0.01	0.054		<0.01	<0.01*			
	09/24/14	8270C		<0.01			<0.02		<0.01*		0.01								<0.01	<0.01	0.18	0.29	<0.02	<0.01	0.31		<0.01	0.011			
	04/09/14	8270C		<0.01			<0.02		<0.01*		<0.01								<0.01	<0.01	0.16	0.25	<0.02	<0.01	0.32		<0.01	0.012			

8.17.4 MKTF WELLS

Semi-Volatile Organic Compound Analytical Result Summary

			PARAMETERS																												
		STANDARDS	Acenaphthene (mg/L)	Aniline (mg/L)	Anthracene (mg/L)	Benz(a) anthracene (mg/L)	Benzoic Acid (mg/L)	Benzyl alcohol (mg/L)	Bis(2-ethylhexyl) phthalate (mg/L)	Butyl benzyl phthalate (mg/L)	Carbazole (mg/L)	Chrysene (mg/L)	1,4-Dioxane (mg/L)	Di-n-octyl phthalate (mg/L)	Dibenzo furan (mg/L)	1,4-Dichloro benzene (mg/L)	Diethyl phthalate (mg/L)	Dimethyl phthalate (mg/L)	2,4-Dimethyl phenol (mg/L)	Fluorene (mg/L)	1-Methyl naphthalene (mg/L)	2-Methyl naphthalene (mg/L)	2-Methyl phenol (mg/L)	3+4-Methyl phenol (mg/L)	Naphthalene (mg/L)	Pentachloro phenol (mg/L)	Phenanthrene (mg/L)	Phenol (mg/L)	Pyrene (mg/L)	Pyridine (mg/L)	2,4,6-Trichlorophenol (mg/L)
		WQCC 20 NMAC 6.2.3103 (DEC 2018)	NE	NE	NE	NE	NE	NE	NE	NE	NE	NE	NE	NE	NE	NE	NE	NE	NE	NE	NE	NE	NE	NE	0.03	0.001	NE	0.005	NE	NE	NE
		40 CFR 141.61 MCL	NE	NE	NE	NE	NE	NE	0.006	NE	NE	NE	NE	NE	NE	0.075	NE	NE	NE	NE	NE	NE	NE	NE	NE	0.001	NE	NE	NE	NE	NE
		NMED Tap Water (JUNE 2019)	0.535	NE	1.72	0.00012	NE	NE	0.0556	NE	NE	0.0343	0.0046	NE	NE	0.302	14.8	0.612	0.354	0.288	0.0114	0.035	NE	NE	0.00165	0.0004	0.17	5.76	0.117	NE	0.0119
		EPA RSL for Tap Water (NOVEMBER 2019)	0.53	0.13	1.8	0.00003	75	2	0.056	0.16	NE	0.025	0.00046	0.2	0.0079	0.00048	15	NE	0.36	0.29	0.0011	0.036	0.93	0.93	0.00017	0.000041	NE	5.8	0.12	0.02	0.0041
Well ID	DATE SAMPLED	METHOD																													
MKTF-20	11/05/19	8270D		<0.005		<0.005*	<0.01	<0.005	<0.005	<0.005	<0.005		<0.01*	<0.005				<0.005	<0.005	<0.005	0.00864	0.0106	<0.005	0.0275	0.0348	<0.005*	<0.005	0.0304		<0.005	
	08/21/19	8270C		<0.01		<0.01*	<0.02	<0.01	<0.01*	<0.01	<0.01			<0.01				<0.01	<0.01	<0.01	<0.01	<0.01	<0.01	<0.01	<0.01	<0.02*	<0.01	<0.01*		<0.01	
	05/14/19	8270C		<0.05		<0.05*	<0.1	<0.05	<0.05*	<0.05	<0.05			<0.05				<0.05	0.039	<0.05	<0.05*	<0.05*	<0.05	<0.05	0.065	<0.1*	<0.05	<0.05*		<0.01	
	02/20/19	8270C		<0.05		<0.05*	0.044	<0.05	<0.05*	<0.05	<0.05			<0.05				<0.05	<0.05	<0.05	<0.05*	<0.05*	<0.05	0.67	<0.05*	<0.05*	<0.05	<0.05*		<0.05*	
	11/29/18	8270C		<0.01		<0.01*	0.026	<0.01	0.012	<0.01	<0.01			<0.01				<0.05	0.24	<0.01	0.011	0.0063	0.0098	0.016	0.031	<0.02*	<0.01	0.028		<0.01	
	08/31/18	8270C		<0.01		<0.01*	<0.02	<0.01	<0.01*	<0.01	<0.01			<0.01				<0.01	<0.01	<0.01	<0.01	<0.01	<0.01	<0.01	0.016	<0.01*	<0.01	<0.01*		<0.01	
	05/11/18	8270C		<0.1		<0.1*	0.16	<0.1	<0.1*	<0.1	<0.1			<0.1				<0.1	0.24	<0.1	<0.1*	<0.1*	<0.1	0.054	0.15	<0.2*	<0.1	0.073		<0.1*	
	02/15/18	8270C		<0.05		<0.05*	0.071	<0.05	<0.05*	<0.05	<0.05			<0.05				<0.05	0.04	<0.05	0.065	0.077	0.027	<0.05	0.31	<0.1*	<0.05	0.23		<0.05*	
	11/29/17	8270C		<0.05		<0.05*	<0.1	<0.05	<0.05*	<0.05	<0.05			<0.05				<0.05	0.044	<0.05	0.059	0.061	0.028	<0.05	0.2	<0.1*	<0.05	0.085		<0.05*	
	09/26/17	8270C		<0.01		<0.01*	0.025	<0.01	<0.01*	<0.01	<0.01			<0.01				<0.01	0.066	<0.01	0.037	0.041	0.075	0.022	0.16	<0.02*	<0.01	0.078		<0.01	
	06/12/17	8270C		<0.05		<0.05*	<0.1	<0.05	0.025	<0.05	<0.05			<0.05				<0.05	0.11	<0.05	0.038	0.037	0.13	0.13	0.18	<0.1*	<0.05	0.073		<0.05*	
	03/14/17	8270C		<0.05		<0.05*	0.067	<0.05	0.036	<0.05	<0.05			0.018				<0.05	0.34	<0.05	0.029	0.028	0.34	0.19	0.072	<0.1*	<0.05	0.31		<0.05*	
	11/03/16	8270C		<0.05			0.061		0.035	0.014	<0.05			0.036				<0.05	0.43	<0.05	0.05	0.038	0.16	0.089	0.11	<0.1*	<0.05	0.13		<0.05*	
	09/12/16	8270C		<0.1			0.13		0.036		<0.1			0.038				0.029	0.39	<0.1	0.048	0.043	0.19	0.061	0.11	0.025	<0.1	0.061		<0.1*	
	06/09/16	8270C		<0.05			<0.1		0.018		<0.05			0.025					0.23	<0.05	0.051	0.029	0.25	0.28	0.077		<0.05	0.24		<0.05*	
	03/01/16	8270C		<0.01			<0.02		<0.01*		<0.01								0.28	<0.01	0.036	0.023	0.096	<0.01	0.05		<0.01	0.011		<0.01	
	06/08/15	8270C		<0.01			<0.02		<0.01*		<0.01								0.23	<0.01	0.037	0.036	0.049	0.13	0.056		<0.01	0.05		<0.01	
	03/16/15	8270C		<0.01			<0.02		<0.01*		<0.01								0.32	<0.01	0.045	0.037	0.21	0.36	0.13		<0.01	0.21		0.016	
	11/18/14	8270C		<0.01			<0.02		0.014		<0.01								0.61	<0.01	0.11	0.066	0.12	0.051	0.1		<0.01	0.037			
	04/11/14	8270C		0.022			<0.026		<0.013*		<0.013								0.13	<0.013	0.088	0.12	0.12	0.076	0.25		<0.013	<0.01*3			
MKTF-21	11/05/19	8270D		<0.005			<0.005		0.047	<0.005	<0.005		0.00709	<0.005				<0.005	0.263	<0.005	0.0492	0.0571	<0.005	0.0304	0.216	<0.005*	0.00279	0.0952			0.0188
	08/22/19	8270C		<0.011			0.038		0.0054	<0.011	<0.011			<0.011				<0.011	<0.011	<0.011	0.0093	0.0064	<0.011	<0.011	0.037	<0.022*	<0.011	0.069			
	05/14/19	8270C		<0.05			<0.1		<0.05*	<0.05	<0.05			<0.05				<0.05	<0.05	<0.05	<0.05*	<0.05*	<0.05	0.41	0.022	<0.1*	<0.05	0.042			
	02/20/19	8270C		<0.05			<0.1		0.043	<0.05	<0.05			<0.05				<0.05	<0.05	<0.05	0.079	0.069	<0.05	<0.05	0.16	<0.1*	<0.05	<0.05*			
	11/29/18	8270C		<0.01			<0.02		0.047	<0.01	<0.01			<0.01				<0.01	0.027	<0.01	0.012	<0.01	<0.01	<0.01	0.0077	<0.2*	<0.1	0.21			
	08/31/18	8270C		<0.02			0.013		<0.02*	<0.02	<0.02			<0.02				<0.02	<0.02	<0.02	<0.02*	<0.02	<0.02	0.016	<0.2*	<0.04*	<0.02	<0.02*			
	05/11/18	8270C		<0.1			0.16		<0.1*	<0.1	<0.1			<0.1				<0.1	<0.1	<0.1	<0.1*	<0.1*	<0.1	0.071	<0.1*	<0.2*	<0.1	<0.1*			
	02/15/18	8270C		<0.05			0.048		0.11	<0.05	<0.05			<0.05				<0.05	0.017	<0.05	<0.05*	0.026	<0.05	<0.05	0.04	<0.1*	<0.05	0.035			
	11/28/17	8270C		<0.1			0.07		<0.1*	<0.1	<0.1			<0.1				<0.1	<0.1	<0.1	<0.1*	<0.1*	<0.1	<0.1	0.047	<0.2*	<0.1	0.12			
	09/26/17	8270C		<0.01			0.012		<0.01*	<0.01	<0.01			<0.01				<0.01	0.015	<0.01	0.0071	<0.01	0.0093	<0.01	0.017	<0.02*	<0.01	0.031			
	06/21/17	8270C		<0.01			<0.02		0.0052	<0.01	<0.01			<0.1				<0.01	0.038	<0.01	0.008	0.0049	0.021	0.15	0.028	<0.02*	<0.01	0.06			
	03/14/17	8270C		<0.05			0.033		0.035	<0.05	<0.05			0.017				<0.05	0.021	<0.05	<0.05*	<0.05*	<0.05	0.03	0.02	<0.1*	<0.05	0.036			
	11/03/16	8270C		<0.1			0.11		0.064	0.027	<0.1			0.081				<0.1	0.03	<0.1	<0.1*	<0.1*	<0.1	0.03	0.049	<0.2*	<0.1	0.03			
	09/12/16	8270C		<0.1			0.063		0.056		<0.1			0.035				0.029	<0.1	<0.1	<0.1*	<0.1*	<0.1	0.42	<0.1*	0.024	<0.1	0.08			
	03/01/16	8270C		<0.01			0.036		<0.01*		<0.01								0.0057	<0.01	<0.01	<0.01	<0.01	0.12	<0.01		<0.01	0.037			
	06/10/15	8270C		<0.01			<0.02		<0.01*		<0.01								0.011	<0.01	<0.01	<0.01	<0.01	0.11	<0.01		<0.01	0.035			
	03/16/15	8270C		<0.01			<0.02		<0.01*		<0.01								<0.01	<0.01	<0.01	<0.01	<0.01	0.069	<0.01		<0.01	0.038			
	04/11/14	8270C		<0.012			<0.025		<0.012*		<0.012								0.1	<0.012	0.069	0.11	0.14	0.1	0.27		<0.012	0.013			

8.17.4 MKTF WELLS

Semi-Volatile Organic Compound Analytical Result Summary

			PARAMETERS																												
		STANDARDS	Acenaphthene (mg/L)	Aniline (mg/L)	Anthracene (mg/L)	Benz(a) anthracene (mg/L)	Benzoic Acid (mg/L)	Benzyl alcohol (mg/L)	Bis(2-ethylhexyl) phthalate (mg/L)	Butyl benzyl phthalate (mg/L)	Carbazole (mg/L)	Chrysene (mg/L)	1,4-Dioxane (mg/L)	Di-n-octyl phthalate (mg/L)	Dibenzo furan (mg/L)	1,4-Dichloro benzene (mg/L)	Diethyl phthalate (mg/L)	Dimethyl phthalate (mg/L)	2,4-Dimethyl phenol (mg/L)	Fluorene (mg/L)	1-Methyl naphthalene (mg/L)	2-Methyl naphthalene (mg/L)	2-Methyl phenol (mg/L)	3+4-Methyl phenol (mg/L)	Naphthalene (mg/L)	Pentachloro phenol (mg/L)	Phenanthrene (mg/L)	Phenol (mg/L)	Pyrene (mg/L)	Pyridine (mg/L)	2,4,6-Trichlorophenol (mg/L)
		WQCC 20 NMAC 6.2.3103 (DEC 2018)	NE	NE	NE	NE	NE	NE	NE	NE	NE	NE	NE	NE	NE	NE	NE	NE	NE	NE	NE	NE	NE	NE	0.03	0.001	NE	0.005	NE	NE	NE
		40 CFR 141.61 MCL	NE	NE	NE	NE	NE	NE	0.006	NE	NE	NE	NE	NE	NE	0.075	NE	NE	NE	NE	NE	NE	NE	NE	NE	0.001	NE	NE	NE	NE	NE
		NMED Tap Water (JUNE 2019)	0.535	NE	1.72	0.00012	NE	NE	0.0556	NE	NE	0.0343	0.0046	NE	NE	0.302	14.8	0.612	0.354	0.288	0.0114	0.035	NE	NE	0.00165	0.0004	0.17	5.76	0.117	NE	0.0119
		EPA RSL for Tap Water (NOVEMBER 2019)	0.53	0.13	1.8	0.00003	75	2	0.056	0.16	NE	0.025	0.00046	0.2	0.0079	0.00048	15	NE	0.36	0.29	0.0011	0.036	0.93	0.93	0.00017	0.000041	NE	5.8	0.12	0.02	0.0041
Well ID	DATE SAMPLED	METHOD																													
MKTF-22	10/24/19	8270D	0.00363	<0.0005	0.00019		<0.0005		0.00234		0.0122		0.0154	<0.0005	0.00242			<0.0005	<0.0005	0.00495	0.0414	0.00151	<0.0005	<0.0005	0.0113		0.00059	0.0358			
	08/20/19	8270C	<0.01	<0.01			<0.02		<0.01*		0.0069			<0.01				<0.01	<0.01	0.0036	0.035	<0.01	<0.01	<0.01	0.011		<0.01	0.022			
	05/09/19	8270C	<0.01	<0.01			<0.02		<0.01*		0.0047			<0.01				<0.01	<0.01	0.006	0.04	<0.01	<0.01	<0.01	0.0086		<0.01	0.022			
	03/26/19	8270C	<0.01	<0.01			<0.02		<0.01*		<0.01			<0.01				<0.01	<0.01	<0.01	0.022	<0.01	<0.01	<0.01	<0.01		<0.01	0.019			
	11/28/18	8270C	<0.01	<0.01			0.025		<0.01*		<0.01			<0.01				<0.01	<0.01	<0.01	0.032	<0.01	<0.01	<0.01	0.012		<0.01	0.023			
	08/30/18	8270C	<0.01	<0.01			0.016		<0.01*		<0.01			<0.01				<0.01	0.0069	<0.01	0.036	<0.01	<0.01	<0.01	0.012		<0.01	0.019			
	05/10/18	8270C	<0.01	<0.01			0.017		<0.01*		<0.01			<0.01				<0.01	<0.01	<0.01	0.033	<0.01	<0.01	<0.01	0.012		<0.01	0.017			
	02/08/18	8270C	<0.01	<0.01			0.017		<0.01*		<0.01			<0.01				<0.01	<0.01	0.005	0.053	<0.01	<0.01	<0.01	0.018		<0.01	0.024			
	11/28/17	8270C	<0.01	<0.01			0.015		0.1		<0.01			<0.01				<0.01	<0.01	0.0053	0.058	<0.01	<0.01	<0.01	0.022		<0.01	0.022			
	10/03/17	8270C	<0.01	<0.01			0.015		<0.01*		<0.01			<0.01				<0.01	<0.01	<0.01	0.075	<0.01	<0.01	<0.01	0.028		<0.01	0.014			
	06/08/17	8270C	<0.01	<0.01			0.014		0.0055		<0.01			0.0052				<0.01	<0.01	<0.01	0.047	<0.01	<0.01	<0.01	0.027		<0.01	0.02			
	03/08/17	8270C	<0.01	<0.01			0.011		0.0068		0.0046			0.0035				<0.01	<0.01	0.003	0.044	0.0086	<0.01	0.0025	0.031		<0.01	0.0095			
	11/01/16	8270C	0.0038	<0.01			0.018		0.0068		0.0049			0.0073				<0.01	0.0037	0.0057	0.07	0.013	<0.01	<0.01	0.052		<0.01	0.023			
	09/10/16	8270C	<0.01	<0.01			0.011		0.003		0.0024			0.0034				0.003	<0.01	<0.01	0.039	0.005	<0.01	<0.01	0.023		<0.01	0.0077			
	06/10/16	8270C	0.0039	<0.01			<0.02		0.0046		0.0053			0.0091					<0.01	<0.01	0.067	0.011	<0.01	<0.01	0.046		<0.01	0.019			
	02/25/16	8270C		<0.01			<0.02		<0.01*		<0.01								<0.01	<0.01	0.042	<0.01	<0.01	<0.01	0.029		<0.01	<0.01*			
	11/09/15	8270C		<0.01			<0.02		<0.01*		<0.01								<0.01	<0.01	0.04	<0.01	<0.01	<0.01	0.011		<0.01	0.01			
	08/20/15	8270C		<0.01			<0.02		<0.01*		<0.01								<0.01	<0.01	0.018	<0.01	<0.01	<0.01	<0.01		<0.01	0.014			
	06/09/15	8270C		<0.01			<0.02		<0.01*		<0.01								<0.01	<0.01	0.062	<0.01	<0.01	<0.01	0.013		<0.01	0.018			
	03/12/15	8270C		<0.01			<0.02		<0.01*		<0.01								<0.01	<0.01	0.066	<0.01	<0.01	<0.01	0.016		<0.01	0.014			
	11/17/14	8270C		<0.01			<0.02		0.013		<0.01								<0.01	<0.01	0.045	<0.01	<0.01	<0.01	<0.01		<0.01	<0.01*			
	04/10/14	8270C		<0.01			<0.02		<0.01*		<0.01								<0.02	<0.01	0.045	<0.01	<0.02	<0.01	0.013		<0.01	<0.01*			
MKTF-23	10/29/19	8270D	0.0796	<0.030	0.0216		<0.025		<0.05*		<0.05	0.0125	<0.05*	0.03					<0.030	0.201	2.43	3.5	<0.030	<0.030	1.19		0.337	<0.03*	0.0606		
	08/20/19	--	SPH Detected - No samples were collected.																												
	05/09/19	--	SPH Detected - No samples were collected.																												
	03/26/19	8270C		<0.01			<0.02		<0.01*		<0.01			<0.01					0.015	<0.01	0.053	0.062	0.026	0.026	0.15		<0.01	0.0068			
	06/10/16	8270C		<0.05			<0.1		<0.05*		<0.05			0.03					<0.05	0.38	7.8	5.6	<0.05	<0.05	2.3		0.72	<0.05*			
	02/25/16	8270C		<0.01			<0.02		<0.01*		<0.01								0.11	0.011	0.22	0.23	0.037	0.024	0.23		0.029	0.017			
	11/09/15	8270C		<0.01			<0.02		<0.01*		<0.01								0.065	0.013	0.17	0.21	0.06	0.054	0.23		0.022	0.036			
	08/21/15	8270C		<0.01			<0.02		<0.01*		<0.01								<0.01	<0.01	0.14	0.19	0.061	0.047	0.27		0.016	<0.01*			
	06/09/15	8270C		<0.01			<0.02		<0.01*		<0.01								0.12	<0.01	0.11	0.14	0.071	0.064	0.2		<0.01	0.034			
	03/12/15	8270C		<0.01			<0.02		<0.01*		<0.01								0.094	<0.01	0.079	0.082	0.042	0.063	0.15		<0.01	0.021			
	11/17/14	8270C		<0.01			<0.02		0.014		<0.01								0.031	<0.01	0.084	0.092	0.058	0.053	0.13		<0.01	0.027			
	09/23/14	8270C		<0.01			<0.02		<0.01*		<0.01								0.027	<0.01	0.075	0.079	0.034	0.025	0.13		<0.01	0.022			
MKTF-24	10/23/19	8270D	0.00055	<0.0005			<0.0005		0.00047	<0.0005	0.00044		0.0313	<0.0005				<0.0005	<0.0005	<0.0005	0.00541	<0.0005	<0.0005	<0.0005	0.00103		<0.0005	0.0207			
	08/23/19	8270C		<0.01			<0.02		<0.01*	<0.01	<0.01			<0.01				<0.01	<0.01	<0.01	0.0053	<0.01	<0.01	<0.01	<0.01		<0.01	0.011			
	05/06/19	8270C		<0.01			<0.02		<0.01*	<0.01	<0.01			<0.01				<0.01	<0.01	<0.01	<0.01	<0.01	<0.01	<0.01	<0.01		<0.01	0.016			
	02/25/19	--	Well not sampled.																												
	11/15/18	8270C		<0.01			0.019		<0.01*	<0.01	<0.01			<0.01				<0.01	<0.01	<0.01	<0.01	<0.01	<0.01	<0.01	<0.01		<0.01	<0.01*			
	08/20/18	8270C		<0.01			<0.02		<0.01*	<0.01	<0.01			<0.01				<0.01	<0.01	<0.01	<0.01	<0.01	<0.01	<0.01	<0.01		<0.01	<0.01*			
	05/01/18	8270C		<0.01			0.034		<0.01*	<0.01	<0.01			<0.01				<0.01	<0.01	<0.01	<0.01	<0.01	<0.01	<0.01	<0.01		<0.01	<0.01*			
	02/06/18	8270C		<0.01			<0.02		<0.01*	<0.01	<0.01			<0.01				<0.01	<0.01	<0.01	0.01	<0.01	<0.01	<0.01	0.0074		<0.01	0.0062			
	11/20/17	8270C		<0.01			<0.02		<0.01*	<0.01	<0.01			<0.01				<0.01	<0.01	<0.01	0.009	<0.01	<0.01	<0.01	0.0058		<0.01	0.0032			
	10/03/17	8270C		<0.01			<0.02		<0.01*	<0.01	<0.01			<0.01				<0.01	<0.01	<0.01	<0.01	<0.01	<0.01	<0.01	<0.01		<0.01	0.01			
	06/05/17	8270C		<0.01			0.01		0.006	<0.01	<0.01			<0.01				<0.01	<0.01	<0.01	0.0063	<0.01	<0.01	<0.01	0.0072		<0.01	0.0036			
	03/29/17	8270C		<0.01			<0.02		0.0076	<0.01	<0.01			<0.01				<0.01	<0.01	<0.01	<0.01	<0.01	<0.01	<0.01	<0.01		<0.01	0.0047			
	10/28/16	8270C		<0.01			0.013		0.0066	0.0027	<0.01			0.0069				<0.01	<0.01	<0.01	0.0073	<0.01	<0.01	<0.01	0.0055		<0.01	<0.01*			
	09/07/16	8270C		<0.01			0.01		0.004		<0.01			0.0049				0.0073	<0.01	<0.01	0.0042	<0.01	<0.01	<0.01	0.0029		<0.01	<0.01*			
	06/08/16	8270C		<0.01			<0.02		0.0034		<0.01			0.005					<0.01	<0.01	0.0034	<0.01	<0.01	0.0045	<0.01		<0.01	0.0056			
	02/22/16	8270C		<0.01			<0.02		<0.01*		<0.01								<0.01	<0.01	<0.01	<0.01	<0.01	0.012	0.0072		<0.01	<0.01*			
	11/04/15	8270C		<0.01			<0.02		<0.01*		<0.01								<0.01	<0.01	<0.01	<0.01	<0.01	<0.01	<0.01		<0.01	<0.01*			
	08/20/15	8270C		<0.01			<0.02		<0.01*		<0.01								<0.01	<0.01	<0.01	<0.01	<0.01	<0.01	<0.01		<0.01	<0.01*			
	06/10/15	8270C		<0.01			<0.02		<0.01*		<0.01								<0.01	<0.01	<0.01	<0.01	<0.01	<0.01	<0.01		<0.01	<0.01*			
	03/11/15	8270C		<0.01			<0.02		<0.01*		<0.01								<0.01	<0.01	<0.01	<0.01	<0.01	<0.01	<0.01		<0.01	<0.01*			
	11/14/14	8270C		<0.01			<0.02		0.011		<0.01								<0.01	<0.01	<0.01	<0.01	<0.02	<0.01	<0.01		<0.01	<0.01*			
	09/24/14	8270C		<0.01			<0.02		<0.01*		<0.01								<0.01	<0.01	<0.01	<0.01	<0.01	<0.01	<0.01		<0.01	<0.01*			
	04/08/14	8270C		<0.01			<0.02		<0.01*		<0.01								<0.01	<0.01	<0.01	<0.01	<0.02	<0.01	<0.01		<0.01	<0.01*			

8.17.4 MKTF WELLS

Semi-Volatile Organic Compound Analytical Result Summary

			PARAMETERS																												
		STANDARDS	Acenaphthene (mg/L)	Aniline (mg/L)	Anthracene (mg/L)	Benz(a) anthracene (mg/L)	Benzoic Acid (mg/L)	Benzyl alcohol (mg/L)	Bis(2-ethylhexyl) phthalate (mg/L)	Butyl benzyl phthalate (mg/L)	Carbazole (mg/L)	Chrysene (mg/L)	1,4-Dioxane (mg/L)	Di-n-octyl phthalate (mg/L)	Dibenzo furan (mg/L)	1,4-Dichloro benzene (mg/L)	Diethyl phthalate (mg/L)	Dimethyl phthalate (mg/L)	2,4-Dimethyl phenol (mg/L)	Fluorene (mg/L)	1-Methyl naphthalene (mg/L)	2-Methyl naphthalene (mg/L)	2-Methyl phenol (mg/L)	3+4-Methyl phenol (mg/L)	Naphthalene (mg/L)	Pentachloro phenol (mg/L)	Phenanthrene (mg/L)	Phenol (mg/L)	Pyrene (mg/L)	Pyridine (mg/L)	2,4,6-Trichlorophenol (mg/L)
		WQCC 20 NMAC 6.2.3103 (DEC 2018)	NE	NE	NE	NE	NE	NE	NE	NE	NE	NE	NE	NE	NE	NE	NE	NE	NE	NE	NE	NE	NE	NE	0.03	0.001	NE	0.005	NE	NE	NE
		40 CFR 141.61 MCL	NE	NE	NE	NE	NE	NE	0.006	NE	NE	NE	NE	NE	NE	0.075	NE	NE	NE	NE	NE	NE	NE	NE	NE	0.001	NE	NE	NE	NE	NE
		NMED Tap Water (JUNE 2019)	0.535	NE	1.72	0.00012	NE	NE	0.0556	NE	NE	0.0343	0.0046	NE	NE	0.302	14.8	0.612	0.354	0.288	0.0114	0.035	NE	NE	0.00165	0.0004	0.17	5.76	0.117	NE	0.0119
		EPA RSL for Tap Water (NOVEMBER 2019)	0.53	0.13	1.8	0.00003	75	2	0.056	0.16	NE	0.025	0.00046	0.2	0.0079	0.00048	15	NE	0.36	0.29	0.0011	0.036	0.93	0.93	0.00017	0.000041	NE	5.8	0.12	0.02	0.0041
Well ID	DATE SAMPLED	METHOD																													
MTKF-25	10/23/19	8270D		<0.0005			<0.0005		0.00145	<0.0005	<0.0005		0.104	<0.0005				<0.0005	<0.0005	<0.0005	<0.0005	<0.0005	<0.0005	<0.0005	0.0045		<0.0005	0.0212			
	08/27/19	8270C		<0.01			<0.02		*<0.01**	<0.01	<0.01			<0.01				<0.01	<0.01	<0.01	<0.01	<0.01	<0.01	<0.01	<0.01		<0.01	*<0.01**			
	05/06/19	8270C		<0.01			<0.02		*<0.01**	<0.01	<0.01			<0.01				<0.01	<0.01	<0.01	<0.01	<0.01	<0.01	<0.01	<0.01		<0.01	*<0.01**			
	02/14/19	--	Well not sampled.																												
	11/15/18	8270C		<0.01			0.02		*<0.01**	<0.01	<0.01			<0.01				<0.01	<0.01	<0.01	<0.01	<0.01	<0.01	<0.01	0.0045		<0.01	0.0044			
	08/17/18	8270C		<0.01			0.0099		*<0.01**	<0.01	<0.01			<0.01				<0.01	<0.01	<0.01	<0.01	<0.01	<0.01	<0.01	<0.01		<0.01	0.023			
	05/06/18	8270C		<0.01			0.021		*<0.01**	<0.01	<0.01			<0.01				<0.01	<0.01	<0.01	<0.01	<0.01	<0.01	<0.01	<0.01		<0.01	*<0.01**			
	02/05/18	8270C		<0.01			0.018		*<0.01**	<0.01	<0.01			<0.01				<0.01	<0.01	<0.01	0.0085	<0.01	<0.01	<0.01	0.0053		<0.01	0.0068			
	11/21/17	8270C		<0.01			<0.02		*<0.01**	<0.01	<0.01			0.0047				<0.01	<0.01	<0.01	0.0059	<0.01	<0.01	<0.01	0.0045		<0.01	0.0044			
	09/25/17	8270C		<0.01			<0.02		*<0.01**	<0.01	<0.01			<0.01				<0.01	<0.01	<0.01	0.0075	<0.01	<0.01	<0.01	0.007		<0.01	0.012			
	06/05/17	8270C		<0.01			0.0083		0.005	<0.01	<0.01			<0.01				<0.01	<0.01	<0.01	<0.01	<0.01	<0.01	<0.01	<0.01		<0.01	0.0076			
	03/29/17	8270C		<0.01			0.008		0.0061	<0.01	<0.01			<0.01				<0.01	<0.01	<0.01	0.0035	<0.01	<0.01	<0.01	<0.01		<0.01	0.0053			
	11/01/16	8270C		<0.01			0.011		0.0072	0.0027	<0.01			0.0084				<0.01	<0.01	<0.01	0.0055	<0.01	<0.01	<0.01	0.0037		<0.01	0.0068			
	09/09/16	8270C		<0.01			0.0099		0.0038		<0.01			0.0038				0.0031	<0.01	<0.01	0.0041	<0.01	<0.01	<0.01	<0.01		<0.01	0.012			
	06/09/16	8270C		<0.01			<0.02		0.0037		<0.01			0.0054					<0.01	<0.01	0.0038	<0.01	<0.01	<0.01	0.0037		<0.01	0.0079			
	02/23/16	8270C		<0.01			<0.02		*<0.01**		<0.01								<0.01	<0.01	<0.01	<0.01	<0.01	<0.01	<0.01		<0.01	*<0.01**			
	11/05/15	8270C		<0.01			<0.02		*<0.01**		<0.01								<0.01	<0.01	<0.01	<0.01	<0.01	<0.01	<0.01		<0.01	*<0.01**			
	08/21/15	8270C		<0.01			<0.02		*<0.01**		<0.01								<0.01	<0.01	<0.01	<0.01	<0.01	<0.01	<0.01		<0.01	*<0.01**			
	06/10/15	8270C		<0.01			<0.02		*<0.01**		<0.01								<0.01	<0.01	<0.01	<0.01	<0.01	<0.01	<0.01		<0.01	*<0.01**			
	03/11/15	8270C		<0.01			<0.02		*<0.01**		<0.01								<0.02	<0.01	<0.01	<0.01	<0.01	<0.01	0.017		<0.01	*<0.01**			
	11/14/14	8270C		<0.01			<0.02		*<0.01**		<0.01								<0.01	<0.01	<0.01	<0.01	<0.01	<0.01	<0.01		<0.01	*<0.01**			
	09/23/14	8270C		<0.01			<0.02		*<0.01**		<0.01								<0.01	<0.01	<0.01	<0.01	<0.02	<0.01	<0.01		<0.01	*<0.01**			
	04/08/14	8270C		<0.01			<0.02		*<0.01**		<0.01								<0.01	<0.01	<0.01	<0.01	<0.02	<0.01	0.021		<0.01	0.013			
MKTF-26			SPH Detected - No samples were collected.																												
	06/09/16	8270C		<0.01			<0.02		0.0039		<0.01			0.0052				0.003	<0.01	<0.01	<0.01	<0.01	<0.01	<0.01	<0.01		<0.01	*<0.01**			
	02/22/16	8270C		<0.01			<0.02		*<0.01**		<0.01								<0.01	<0.01	<0.01	<0.01	<0.01	<0.01	<0.01		<0.01	*<0.01**			
	11/04/15	8270C		<0.01			<0.02		*<0.01**		<0.01								<0.01	<0.01	<0.01	<0.01	<0.01	<0.01	<0.01		<0.01	*<0.01**			
	08/20/15	8270C		<0.01			<0.02		*<0.01**		<0.01								<0.01	<0.01	<0.01	<0.01	<0.02	<0.01	<0.01		<0.01	0.018			
	06/10/15	8270C		<0.01			<0.02		*<0.01**		<0.01								<0.01	<0.01	<0.01	<0.01	<0.02	<0.01	<0.01		<0.01	0.014			
	03/11/15	8270C		<0.01			<0.02		*<0.01**		<0.01								<0.01	<0.01	<0.01	<0.01	<0.01	<0.01	<0.01		<0.01	0.014			
	11/14/14	8270C		<0.01			<0.02		*<0.01**		<0.01								<0.01	<0.01	<0.01	<0.01	<0.02	<0.01	<0.01		<0.01	*<0.01**			
	09/24/14	8270C		<0.01			<0.02		*<0.01**		<0.01								<0.01	<0.01	<0.01	<0.01	<0.02	<0.01	<0.01		<0.01	0.013			
	04/08/14	8270C		<0.012			<0.023		*<0.012**		<0.012								<0.012	<0.012	*<0.012**	<0.012	<0.023	<0.012	<0.012		<0.012	*<0.01*2*			
MKTF-27	10/23/19	8270D		<0.0005		*<0.0005**	<0.0005		0.0024	<0.0005	<0.0005		0.00675	<0.0005				<0.0005	<0.0005	<0.0005	<0.0005	<0.0005	<0.0005	<0.0005	<0.0005		<0.0005	<0.0005	<0.0005		
	08/21/19	8270C		<0.01		*<0.01**	<0.02		*<0.01**	<0.01	<0.01			<0.01				<0.01	<0.01	<0.01	<0.01	<0.01	<0.01	<0.01	<0.01		<0.01	*<0.01**	<0.01		
	05/06/19	8270C		<0.01		*<0.01**	<0.02		*<0.01**	<0.01	<0.01			<0.01				<0.01	<0.01	<0.01	<0.01	<0.01	<0.01	<0.01	<0.01		<0.01	*<0.01**	<0.01		
	03/28/19	8270C		<0.01		*<0.01**	0.0076		*<0.01**	<0.01	<0.01			<0.01				<0.01	<0.01	<0.01	<0.01	<0.01	<0.01	<0.01	<0.01		<0.01	*<0.01**	<0.01		
	11/15/18	8270C		<0.01		*<0.01**	0.01		*<0.01**	<0.01	<0.01			<0.01				<0.01	<0.01	<0.01	<0.01	<0.01	<0.01	<0.01	<0.01		<0.01	*<0.01**	<0.01		
	08/20/18	8270C		<0.01		*<0.01**	0.008		*<0.01**	<0.01	<0.01			<0.01				<0.01	<0.01	<0.01	<0.01	<0.01	<0.01	<0.01	<0.01		<0.01	*<0.01**	<0.01		
	05/01/18	8270C		<0.01		*<0.01**	<0.01		*<0.01**	<0.01	<0.01			<0.01				<0.01	<0.01	<0.01	<0.01	<0.01	<0.01	<0.01	<0.01		<0.01	*<0.01**	<0.01		
	02/06/18	8270C		<0.01		0.0046	0.0058		*<0.01**	<0.01	<0.01			<0.01				<0.01	<0.01	<0.01	<0.01	<0.01	<0.01	<0.01	<0.01		<0.01	*<0.01**	0.0046		
	11/20/17	8270C		<0.01		*<0.01**	0.01		*<0.01**	<0.01	<0.01			<0.01				<0.01	<0.01	<0.01	<0.01	<0.01	<0.01	<0.01	<0.01		<0.01	*<0.01**	<0.01		
	10/03/17	8270C		<0.01		*<0.01**	<0.02		*<0.01**	<0.01	<0.01			<0.01				<0.01	<0.01	<0.01	<0.01	<0.01	<0.01	<0.01	<0.01		<0.01	*<0.01**	<0.01		
	06/05/17	8270C		<0.01		*<0.01**	0.0068		0.0053	<0.01	<0.01			<0.01				<0.01	<0.01	<0.01	<0.01	<0.01	<0.01	<0.01	<0.01		<0.01	*<0.01**	<0.01		
	03/29/17	8270C		<0.01		*<0.01**	0.0064		0.0063	<0.01	<0.01			<0.01				<0.01	<0.01	<0.01	<0.01	<0.01	<0.01	<0.01	<0.01		<0.01	*<0.01**	<0.01		
	10/28/16	8270C		<0.01			0.0084		0.0069	0.0057	<0.01			0.0067				<0.01	<0.01	<0.01	<0.01	<0.01	<0.01	<0.01	<0.01		<0.01	*<0.01**			
	09/07/16	8270C		<0.01			0.0098		0.0034		<0.01			0.0034				0.0064	<0.01	<0.01	<0.01	<0.01	<0.01	<0.01	<0.01		<0.01	*<0.01**			
	06/08/16	8270C		<0.01			<0.02		0.0039		<0.01			0.0053				<0.01	<0.01	<0.01	<0.01	<0.01	<0.01	<0.01	<0.01		<0.01	*<0.01**			
	02/22/16	8270C		<0.01			<0.02		*<0.01**		<0.01								<0.01	<0.01	<0.01	<0.01	<0.01	<0.01	<0.01		<0.01	*<0.01**			
	11/04/15	8270C		<0.01			<0.02		*<0.01**		<0.01								<0.01	<0.01	<0.01	<0.01	<0.01	<0.01	<0.01		<0.01	*<0.01**			
	08/20/15	8270C		<0.01			<0.02		*<0.01**		<0.01								<0.01	<0.01	<0.01	<0.01	<0.02	<0.01	<0.01		<0.01	*<0.01**			
	06/09/15	8270C		<0.01			<0.02		*<0.01**		<0.01								<0.01	<0.01	<0.01	<0.01	<0.02	<0.01	<0.01		<0.01	*<0.01**			
	03/11/15	8270C		<0.01			<0.02		*<0.01**		<0.01								<0.01	<0.01	<0.01	<0.01	<0.02	<0.01	<0.01		<0.01	*<0.01**			
	11/14/14	8270C		<0.01			<0.02		*<0.01**		<0.01								<0.01	<0.01	<0.01	<0.01	<0.02	<0.01	<0.01		<0.01	*<0.01**			
	09/24/14	8270C		<0.01			<0.02		*<0.01**		<0.01								<0.01	<0.01	<0.01	<0.01	<0.02	<0.01	<0.01		<0.01	*<0.01**			
	04/08/14	8270C		<0.01			<0.02		*<0.01**		<0.01								<0.01	<0.01	<0.01	<0.01	<0.02	<0.01	<0.01		<0.01	*<0.01**			

8.17.4 MKTF WELLS

Semi-Volatile Organic Compound Analytical Result Summary

			PARAMETERS																												
			Acenaphthene (mg/L)	Aniline (mg/L)	Anthracene (mg/L)	Benz(a) anthracene (mg/L)	Benzoic Acid (mg/L)	Benzyl alcohol (mg/L)	Bis(2-ethylhexyl) phthalate (mg/L)	Butyl benzyl phthalate (mg/L)	Carbazole (mg/L)	Chrysene (mg/L)	1,4-Dioxane (mg/L)	Di-n-octyl phthalate (mg/L)	Dibenzo furan (mg/L)	1,4-Dichloro benzene (mg/L)	Diethyl phthalate (mg/L)	Dimethyl phthalate (mg/L)	2,4-Dimethyl phenol (mg/L)	Fluorene (mg/L)	1-Methyl naphthalene (mg/L)	2-Methyl naphthalene (mg/L)	2-Methyl phenol (mg/L)	3+4-Methyl phenol (mg/L)	Naphthalene (mg/L)	Pentachloro phenol (mg/L)	Phenanthrene (mg/L)	Phenol (mg/L)	Pyrene (mg/L)	Pyridine (mg/L)	2,4,6-Trichlorophenol (mg/L)
STANDARDS																															
WQCC 20 NMAC 6.2.3103 (DEC 2018)			NE	NE	NE	NE	NE	NE	NE	NE	NE	NE	NE	NE	NE	NE	NE	NE	NE	NE	NE	NE	NE	NE	**0.03**	**0.001**	NE	**0.005**	NE	NE	NE
40 CFR 141.61 MCL			NE	NE	NE	NE	NE	NE	**0.006**	NE	NE	NE	NE	NE	NE	**0.075**	NE	NE	NE	NE	NE	NE	NE	NE	NE	0.001	NE	NE	NE	NE	NE
NMED Tap Water (JUNE 2019)			**0.535**	NE	**1.72**	**0.00012**	NE	NE	0.0556	NE	NE	**0.0343**	**0.0046**	NE	NE	0.302	**14.8**	**0.612**	**0.354**	**0.288**	**0.0114**	**0.035**	NE	NE	0.00165	0.0004	**0.17**	5.76	**0.117**	NE	**0.0119**
EPA RSL for Tap Water (NOVEMBER 2019)			0.53	**0.13**	1.8	0.00003	**75**	**2**	0.056	**0.16**	NE	0.025	0.00046	**0.2**	**0.0079**	0.00048	15	NE	0.36	0.29	0.0011	0.036	**0.93**	**0.93**	0.00017	0.000041	NE	5.8	0.12	**0.02**	0.0041
Well ID	DATE SAMPLED	METHOD																													
MKTF-28	10/21/19	8270D		<0.0005			<0.0005		<0.0005	<0.0005	<0.0005		<0.001	<0.0005				<0.0005	<0.0005	<0.0005	<0.0005	<0.0005	<0.0005	<0.0005	<0.0005		<0.0005	<0.0005			
	08/21/19	8270C		<0.01			<0.02		*<0.01**	<0.01	<0.01			<0.01				<0.01	<0.01	<0.01	<0.01	<0.01	<0.01	<0.01	<0.01		<0.01	*<0.01**			
	05/06/19	8270C		<0.01			<0.02		*<0.01**	<0.01	<0.01			<0.01				<0.01	<0.01	<0.01	<0.01	<0.01	<0.01	<0.01	<0.01		<0.01	*<0.01**			
	03/28/19	8270C		<0.01			0.0067		*<0.01**	<0.01	<0.01			<0.01				<0.01	<0.01	<0.01	<0.01	<0.01	<0.01	<0.01	<0.01		<0.01	*<0.01**			
	11/15/18	8270C		<0.01			<0.02		*<0.01**	<0.01	<0.01			<0.01				<0.01	<0.01	<0.01	<0.01	<0.01	<0.01	<0.01	<0.01		<0.01	*<0.01**			
	08/20/18	8270C		<0.01			0.0079		*<0.01**	<0.01	<0.01			<0.01				<0.01	<0.01	<0.01	<0.01	<0.01	<0.01	<0.01	<0.01		<0.01	*<0.01**			
	05/01/18	8270C		<0.01			0.02		*<0.01**	<0.01	<0.01			<0.01				<0.01	<0.01	<0.01	<0.01	<0.01	<0.01	<0.01	<0.01		<0.01	*<0.01**			
	02/06/18	8270C		<0.01			0.0064		*<0.01**	<0.01	<0.01			<0.01				<0.01	<0.01	<0.01	<0.01	<0.01	<0.01	<0.01	<0.01		<0.01	*<0.01**			
	11/20/17	8270C		<0.01			0.0052		**0.012**	<0.01	<0.01			<0.01				<0.01	<0.01	<0.01	<0.01	<0.01	<0.01	<0.01	<0.01		<0.01	*<0.01**			
	10/03/17	8270C		<0.01			0.0067		*<0.01**	<0.01	<0.01			<0.01				<0.01	<0.01	<0.01	<0.01	<0.01	<0.01	<0.01	<0.01		<0.01	*<0.01**			
	06/05/17	8270C		<0.01			0.007		0.0054	<0.01	<0.01			<0.01				<0.01	<0.01	<0.01	<0.01	<0.01	<0.01	<0.01	<0.01		<0.01	*<0.01**			
	03/29/17	8270C		<0.01			0.0065		**0.0066**	<0.01	<0.01			<0.01				<0.01	<0.01	<0.01	<0.01	<0.01	<0.01	<0.01	<0.01		<0.01	*<0.01**			
	10/28/16	8270C		<0.01			0.013		**0.009**	0.0027	<0.01			0.0068				<0.01	<0.01	<0.01	<0.01	<0.01	<0.01	<0.01	<0.01		<0.01	*<0.01**			
	09/08/16	8270C		<0.01			0.0073		0.0033		<0.01							0.0029	<0.01	<0.01	<0.01	<0.01	<0.01	<0.01	<0.01		<0.01	*<0.01**			
	06/08/16	8270C		<0.01			<0.02		0.0041		<0.01								<0.01	<0.01	<0.01	<0.01	<0.01	<0.01	<0.01		<0.01	*<0.01**			
	02/23/16	8270C		<0.01			<0.02		*<0.01**		<0.01								<0.01	<0.01	<0.01	<0.01	<0.01	<0.01	<0.01		<0.01	*<0.01**			
	11/04/15	8270C		<0.01			<0.02		*<0.01**		<0.01								<0.01	<0.01	<0.01	<0.01	<0.01	<0.01	<0.01		<0.01	*<0.01**			
	08/20/15	8270C		<0.01			<0.02		*<0.01**		<0.01								<0.01	<0.01	<0.01	<0.01	<0.02	<0.01	<0.01		<0.01	*<0.01**			
	06/09/15	8270C		<0.01			<0.02		*<0.01**		<0.01								<0.01	<0.01	<0.01	<0.01	<0.02	<0.01	<0.01		<0.01	*<0.01**			
	03/11/15	8270C		<0.01			<0.02		*<0.01**		<0.01								<0.01	<0.01	<0.01	<0.01	<0.02	<0.01	<0.01		<0.01	*<0.01**			
	11/14/14	8270C		<0.01			<0.02		*<0.01**		<0.01								<0.01	<0.01	<0.01	<0.01	<0.02	<0.01	<0.01		<0.01	*<0.01**			
	09/24/14	8270C		<0.01			<0.02		*<0.01**		<0.01								<0.01	<0.01	<0.01	<0.01	<0.02	<0.01	<0.01		<0.01	*<0.01**			
MKTF-29	10/22/19	8270D		<0.0005		*<0.0005**	<0.0005		<0.0005		<0.0005		0.00221	<0.0005				<0.0005	<0.0005	<0.0005	<0.0005	<0.0005	<0.0005	<0.0005	<0.0005		<0.0005	<0.0005			
	08/23/19	8270C		<0.01		*<0.01**	<0.01		*<0.01**		<0.01			<0.01				<0.01	<0.01	<0.01	<0.01	<0.01	<0.01	<0.01	<0.01		<0.01	*<0.01**			
	05/06/19	8270C		<0.01		*<0.01**	<0.02		*<0.01**		<0.01			<0.01				<0.01	<0.01	<0.01	<0.01	<0.01	<0.01	<0.01	<0.01		<0.01	*<0.01**			
	03/28/19	8270C		<0.01		*<0.01**	0.0068		*<0.01**		<0.01			<0.01				<0.01	<0.01	<0.01	<0.01	<0.01	<0.01	<0.01	<0.01		<0.01	*<0.01**			
	11/15/18	8270C		<0.01		*<0.01**	<0.02		*<0.01**		<0.01			<0.01				<0.01	<0.01	<0.01	<0.01	<0.01	<0.01	<0.01	<0.01		<0.01	*<0.01**			
	08/20/18	8270C		<0.01		*<0.01**	0.0084		*<0.01**		<0.01			<0.01				<0.01	<0.01	<0.01	<0.01	<0.01	<0.01	<0.01	<0.01		<0.01	*<0.01**			
	05/01/18	8270C		<0.01		*<0.01**	<0.02		*<0.01**		<0.01			<0.01				<0.01	<0.01	<0.01	<0.01	<0.01	<0.01	<0.01	<0.01		<0.01	*<0.01**			
	02/06/18	8270C		<0.01		*<0.01**	0.0062		*<0.01**		<0.01			<0.01				<0.01	<0.01	<0.01	<0.01	<0.01	<0.01	<0.01	<0.01		<0.01	*<0.01**			
	11/20/17	8270C		<0.01		*<0.01**	0.0068		*<0.01**		<0.01			<0.01				<0.01	<0.01	<0.01	<0.01	<0.01	<0.01	<0.01	<0.01		<0.01	*<0.01**			
	10/03/17	8270C		<0.01		*<0.01**	0.0087		*<0.01**		<0.01			<0.01				<0.01	<0.01	<0.01	<0.01	<0.01	<0.01	<0.01	<0.01		<0.01	*<0.01**			
	06/05/17	8270C		<0.01		*<0.01**	0.011		0.0055		<0.01			0.0056				<0.01	<0.01	<0.01	<0.01	<0.01	<0.01	<0.01	<0.01		<0.01	*<0.01**			
	03/29/17	8270C		<0.01		*<0.01**	0.0062		**0.0061**		<0.01			<0.01				<0.01	<0.01	<0.01	<0.01	<0.01	<0.01	<0.01	<0.01		<0.01	*<0.01**			
	10/28/16	8270C		<0.01		*<0.01**	0.015		**0.007**		<0.01			0.0068				<0.01	<0.01	<0.01	<0.01	<0.01	<0.01	<0.01	<0.01		<0.01	*<0.01**			
	09/07/16	8270C		<0.01		**0.0029**	0.011		0.0037		<0.01			0.0037				0.0065	<0.01	<0.01	<0.01	<0.01	<0.01	<0.01	<0.01		<0.01	*<0.01**			
	06/09/16	8270C		<0.01			<0.02		0.0042		<0.01			0.0049					<0.01	<0.01	<0.01	<0.01	<0.01	<0.01	<0.01		<0.01	*<0.01**			
	02/23/16	8270C		<0.01			<0.02		*<0.01**		<0.01								<0.01	<0.01	<0.01	<0.01	<0.01	<0.01	<0.01		<0.01	*<0.01**			
	11/04/15	8270c		<0.01			<0.02		*<0.01**		<0.01								<0.01	<0.01	<0.01	<0.01	<0.01	<0.01	<0.01		<0.01	*<0.01**			
	08/20/15	8270C		<0.01			<0.02		*<0.01**		<0.01								<0.01	<0.01	<0.01	<0.01	<0.02	<0.01	<0.01		<0.01	*<0.01**			
	06/10/15	8270C		<0.01			<0.02		*<0.01**		<0.01								<0.01	<0.01	<0.01	<0.01	<0.02	<0.01	<0.01		<0.01	*<0.01**			
	03/11/15	8270C		<0.01			<0.02		*<0.01**		<0.01								<0.01	<0.01	<0.01	<0.01	<0.02	<0.01	<0.01		<0.01	*<0.01**			
	09/24/14	8270C		<0.01			<0.02		*<0.01**		<0.01								<0.01	<0.01	<0.01	<0.01	<0.02	<0.01	<0.01		<0.01	*<0.01**			
	04/09/14	8270C		<0.01			<0.02		*<0.01**		<0.01								<0.01	<0.01	<0.01	<0.01	<0.02	<0.01	<0.01		<0.01	*<0.01**			

8.17.4 MKTF WELLS

Semi-Volatile Organic Compound Analytical Result Summary

			PARAMETERS																												
		STANDARDS	Acenaphthene (mg/L)	Aniline (mg/L)	Anthracene (mg/L)	Benz(a) anthracene (mg/L)	Benzoic Acid (mg/L)	Benzyl alcohol (mg/L)	Bis(2-ethylhexyl) phthalate (mg/L)	Butyl benzyl phthalate (mg/L)	Carbazole (mg/L)	Chrysene (mg/L)	1,4-Dioxane (mg/L)	Di-n-octyl phthalate (mg/L)	Dibenzo furan (mg/L)	1,4-Dichloro benzene (mg/L)	Diethyl phthalate (mg/L)	Dimethyl phthalate (mg/L)	2,4-Dimethyl phenol (mg/L)	Fluorene (mg/L)	1-Methyl naphthalene (mg/L)	2-Methyl naphthalene (mg/L)	2-Methyl phenol (mg/L)	3+4-Methyl phenol (mg/L)	Naphthalene (mg/L)	Pentachloro phenol (mg/L)	Phenanthrene (mg/L)	Phenol (mg/L)	Pyrene (mg/L)	Pyridine (mg/L)	2,4,6-Trichlorophenol (mg/L)
		WQCC 20 NMAC 6.2.3103 (DEC 2018)	NE	NE	NE	NE	NE	NE	NE	NE	NE	NE	NE	NE	NE	NE	NE	NE	NE	NE	NE	NE	NE	NE	0.03	0.001	NE	0.005	NE	NE	NE
		40 CFR 141.61 MCL	NE	NE	NE	NE	NE	NE	0.006	NE	NE	NE	NE	NE	NE	0.075	NE	NE	NE	NE	NE	NE	NE	NE	NE	0.001	NE	NE	NE	NE	NE
		NMED Tap Water (JUNE 2019)	0.535	NE	1.72	0.00012	NE	NE	0.0556	NE	NE	0.0343	0.0046	NE	NE	0.302	14.8	0.612	0.354	0.288	0.0114	0.035	NE	NE	0.00165	0.0004	0.17	5.76	0.117	NE	0.0119
		EPA RSL for Tap Water (NOVEMBER 2019)	0.53	0.13	1.8	0.00003	75	2	0.056	0.16	NE	0.025	0.00046	0.2	0.0079	0.00048	15	NE	0.36	0.29	0.0011	0.036	0.93	0.93	0.00017	0.000041	NE	5.8	0.12	0.02	0.0041
Well ID	DATE SAMPLED	METHOD																													
MKTF-30	10/23/19	8270D		<0.0005		<0.0001	<0.0005		<0.0005	<0.0005	<0.0005		0.0433	<0.0005				<0.0005	<0.0005	<0.0005	<0.0005	<0.0005	<0.0005	<0.0005	<0.0005		<0.0005	<0.0005			
	08/23/19	8270C		<0.1			<0.02		<0.01*	<0.01	<0.01			<0.01				<0.01	<0.01	<0.01	<0.01	<0.01	<0.01	<0.01	<0.01		<0.01	<0.01*			
	05/06/19	8270C		<0.01			<0.02		<0.01*	<0.01	<0.01			<0.01				<0.01	<0.01	<0.01	<0.01	<0.01	<0.01	<0.01	<0.01		<0.01	<0.01*			
	03/28/19	8270C		<0.01			0.0074		<0.01*	<0.01	<0.01			<0.01				<0.01	<0.01	<0.01	<0.01	<0.01	<0.01	<0.01	<0.01		<0.01	<0.01*			
	11/15/18	8270C		<0.01			<0.02		<0.01*	<0.01	<0.01			<0.01				<0.01	<0.01	<0.01	<0.01	<0.01	<0.01	<0.01	<0.01		<0.01	<0.01*			
	08/20/18	8270C		<0.01			0.0083		<0.01*	<0.01	<0.01			<0.01				<0.01	<0.01	<0.01	<0.01	<0.01	<0.01	<0.01	<0.01		<0.01	<0.01*			
	05/01/18	8270C		<0.01			0.015		<0.01*	<0.01	<0.01			<0.01				<0.01	<0.01	<0.01	<0.01	<0.01	<0.01	<0.01	<0.01		<0.01	<0.01*			
	02/06/18	8270C		<0.01			<0.02		<0.01*	<0.01	<0.01			<0.01				<0.01	<0.01	<0.01	<0.01	<0.01	<0.01	<0.01	<0.01		<0.01	<0.01*			
	11/20/17	8270C		<0.01			0.0079		<0.01*	<0.01	<0.01			<0.01				<0.01	<0.01	<0.01	<0.01	<0.01	<0.01	<0.01	<0.01		<0.01	<0.01*			
	10/03/17	8270C		<0.01			0.0085		<0.01*	<0.01	<0.01			<0.01				<0.01	<0.01	<0.01	<0.01	<0.01	<0.01	<0.01	<0.01		<0.01	<0.01*			
	06/05/17	8270C		<0.01			0.0066		0.013	<0.01	<0.01			<0.01				<0.01	<0.01	<0.01	<0.01	<0.01	<0.01	<0.01	<0.01		<0.01	<0.01*			
	03/29/17	8270C		<0.01			0.0063		0.0061	<0.01	<0.01			<0.01				<0.01	<0.01	<0.01	<0.01	<0.01	<0.01	<0.01	<0.01		<0.01	<0.01*			
	10/28/16	8270C		<0.01			0.0086		0.0069	0.0027	<0.01			0.0069				<0.01	<0.01	<0.01	<0.01	<0.01	<0.01	<0.01	<0.01		<0.01	<0.01*			
	09/07/16	8270C		<0.01			0.0072		0.0034		<0.01			0.0035				0.0059	<0.01	<0.01	<0.01	<0.01	<0.01	<0.01	<0.01		<0.01	<0.01*			
	06/09/16	8270C		<0.01			<0.02		0.0039		<0.01			0.0055					<0.01	<0.01	<0.01	<0.01	<0.01	<0.01	<0.01		<0.01	<0.01*			
	02/23/16	8270C		<0.01			<0.02		<0.01*		<0.01								<0.01	<0.01	<0.01	<0.01	<0.01	<0.01	<0.01		<0.01	<0.01*			
	11/04/15	8270C		<0.01			<0.02		<0.01*		<0.01								<0.01	<0.01	<0.01	<0.01	<0.01	<0.01	<0.01		<0.01	<0.01*			
	08/20/15	8270C		<0.01			<0.02		<0.01*		<0.01								<0.01	<0.01	<0.01	<0.01	<0.02	<0.01	<0.01		<0.01	<0.01*			
	06/10/15	8270C		<0.01			<0.02		<0.01*		<0.01								<0.01	<0.01	<0.01	<0.01	<0.02	<0.01	<0.01		<0.01	<0.01*			
	03/11/15	8270C		<0.01			<0.02		<0.01*		<0.01								<0.01	<0.01	<0.01	<0.01	<0.02	<0.01	<0.01		<0.01	<0.01*			
	11/17/14	8270C		<0.01			<0.02		0.011		<0.01								<0.01	<0.01	<0.01	<0.01	<0.02	<0.01	<0.01		<0.01	<0.01*			
	09/24/14	8270C		<0.01			<0.02		<0.01*		<0.01								<0.01	<0.01	<0.01	<0.01	<0.02	<0.01	<0.01		<0.01	<0.01*			
	04/09/14	8270C		<0.011			<0.021		<0.011*		<0.011								<0.011	<0.011	<0.011	<0.011	<0.021	<0.011	<0.011		<0.011	<0.01*1			
MKTF-31	10/22/19	8270D		<0.0005			<0.0005	<0.0005	<0.0005	<0.0005	<0.0005	<0.0005	0.143	<0.0005	<0.0005		<0.0005	<0.0005	<0.0005	<0.0005	<0.0005	<0.0005	<0.0005	<0.0005	<0.0005		<0.0005	<0.0005			
	08/23/19	8270C		<0.01			<0.02	<0.01	<0.01*	<0.01	<0.01			<0.01			<0.01	<0.01	<0.01	<0.01	<0.01	<0.01	<0.01	<0.01	<0.01		<0.01	<0.01*			
	02/20/19	8270C		<0.01			<0.02	<0.01	<0.01*	<0.01	<0.01			<0.01			<0.01	<0.01	<0.01	<0.01	<0.01	<0.01	<0.01	<0.01	<0.01		<0.01	<0.01*			
	02/20/19	8270C		<0.01			0.011	<0.01	<0.01*	<0.01	<0.01			<0.01			<0.01	<0.01	<0.01	<0.01	<0.01	<0.01	<0.01	<0.01	<0.01		<0.01	<0.01*			
	11/15/18	8270C		<1.0*			<2.0	<1.0	<1.0*	<1.0*	<1.0			<1.0*			<1.0	<1.0*	<1.0*	<1.0*	<1.0*	<1.0*	<1.0*	<1.0*	<1.0*		<1.0*	<1.0*			
	08/17/18	8270C		<0.01			0.0065	<0.01	<0.01*	<0.01	<0.01			<0.01			0.0068	<0.01	<0.01	<0.01	<0.01	<0.01	<0.01	<0.01	<0.01		<0.01	<0.01*			
	05/06/18	8270C		<0.01			0.012	<0.01	<0.01*	<0.01	<0.01			<0.01				<0.01	<0.01	<0.01	<0.01	<0.01	<0.01	<0.01	<0.01		<0.01	<0.01*			
	02/05/18	8270C		<0.01			0.0086	<0.01	<0.01*	<0.01	<0.01			<0.01				<0.01	<0.01	<0.01	<0.01	<0.01	<0.01	<0.01	<0.01		<0.01	<0.01*			
	11/21/17	8270C		<0.01			0.0062	<0.01	<0.01*	<0.01	<0.01			<0.01				<0.01	<0.01	<0.01	<0.01	<0.01	<0.01	<0.01	<0.01		<0.01	<0.01*			
	09/25/17	8270C		<0.01			<0.02	<0.01	0.0055	<0.01	<0.01			<0.01				<0.01	<0.01	<0.01	<0.01	<0.01	<0.01	<0.01	<0.01		<0.01	<0.01*			
	06/05/17	8270C		<0.01			0.0069	<0.01	0.0075	<0.01	<0.01			0.0047				<0.01	<0.01	<0.01	<0.01	<0.01	<0.01	<0.01	<0.01		<0.01	<0.01*			
	03/07/17	8270C		<0.01			0.0068	<0.01	0.0072	<0.01	<0.01			0.0035				<0.01	<0.01	<0.01	<0.01	<0.01	<0.01	<0.01	<0.01		<0.01	<0.01*			
	10/31/16	8270C		<0.01			0.0093		0.0068	0.0029	<0.01			0.0084				<0.01	<0.01	<0.01	<0.01	<0.01	<0.01	<0.01	<0.01		<0.01	<0.01*			
	09/08/16	8270C		<0.01			0.0085		0.0032		<0.01			<0.01				0.0029	<0.01	<0.01	<0.01	<0.01	<0.01	<0.01	<0.01		<0.01	<0.02*			
	06/09/16	8270C		<0.01			<0.02		0.0039		<0.01			0.0051					<0.01	<0.01	<0.01	<0.01	<0.01	<0.01	<0.01		<0.01	<0.02*			
	02/23/16	8270C		<0.01			<0.02		<0.01*		<0.01								<0.01	<0.01	<0.01	<0.01	<0.01	<0.01	<0.01		<0.01	<0.01*			
	11/04/15	8270C		<0.01			<0.02		<0.01*		<0.01								<0.01	<0.01	<0.01	<0.01	<0.01	<0.01	<0.01		<0.01	<0.01*			
	08/21/15	8270C		<0.01			<0.02		<0.01*		<0.01								<0.01	<0.01	<0.01	<0.01	<0.01	<0.01	<0.01		<0.01	<0.01*			
	06/10/15	8270C		<0.01			<0.02		<0.01*		<0.01								<0.01	<0.01	<0.01	<0.01	<0.01	<0.01	<0.01		<0.01	<0.01*			
	03/11/15	8270C		<0.01			<0.02		<0.01*		<0.01								<0.01	<0.01	<0.01	<0.01	<0.01	<0.01	<0.01		<0.01	<0.01*			
	11/17/14	8270C		<0.01			<0.02		0.013		<0.01								<0.01	<0.01	<0.01	<0.01	<0.01	<0.01	<0.01		<0.01	<0.01*			
	09/23/14	8270C		<0.012			<0.025		<0.012*		<0.012								<0.012	<0.012	<0.012*	<0.012	<0.025	<0.012	<0.012		<0.012	<0.01*2			
	04/08/14	8270C		<0.01			<0.02		<0.01*		<0.01								<0.01	<0.01	<0.01	<0.01	<0.02	<0.01	<0.01		<0.01	<0.01*			
MKTF-32	10/23/19	8270D		<0.0005			<0.0005		<0.0005	<0.0005	<0.0005		0.097	<0.0005				<0.0005	<0.0005	<0.0005	<0.0005	<0.0005	<0.0005	<0.0005	<0.0005		<0.0005	<0.0005			
	08/20/19	8270C		<0.01			<0.02		<0.01*	<0.01	<0.01			<0.01				<0.01	<0.01	<0.01	<0.01	<0.01	<0.01	<0.01	<0.01		<0.01	<0.01*			
	05/07/19	8270C		<0.01			<0.02		<0.01*	<0.01	<0.01			<0.01				<0.01	<0.01	<0.01	<0.01	<0.01	<0.01	<0.01	<0.01		<0.01	<0.01*			
	02/13/19	8270C		<0.01			0.011		<0.01*	<0.01	<0.01			<0.01				<0.01	<0.01	<0.01	<0.01	<0.01	<0.01	<0.01	<0.01		<0.01	<0.01*			
	11/15/18	8270C		<0.01			0.017		<0.01*	<0.01	<0.01			<0.01				<0.01	<0.01	<0.01	<0.01	<0.01	<0.01	<0.01	<0.01		<0.01	<0.01*			
	08/28/18	8270C		<0.01			0.0084		<0.01*	<0.01	<0.01			<0.01				<0.01	<0.01	<0.01	<0.01	<0.01	<0.01	<0.01	<0.01		<0.01	<0.01*			
	05/09/18	8270C		<0.01			0.028		<0.01*	<0.01	<0.01			<0.01				<0.01	<0.01	<0.01	<0.01	<0.01	<0.01	<0.01	<0.01		<0.01	<0.01*			
	02/07/18	8270C		<0.01			0.0085		<0.01*	<0.01	<0.01			<0.01				<0.01	<0.01	<0.01	<0.01	<0.01	<0.01	<0.01	<0.01		<0.01	<0.01*			
	11/27/17	8270C		<0.01			0.0053		<0.01*	<0.01	<0.01			<0.01				<0.01	<0.01	<0.01	<0.01	<0.01	<0.01	<0.01	<0.01		<0.01	<0.01*			
	09/25/17	8270C		<0.01			<0.02		<0.01*	<0.01	<0.01			<0.01				<0.01	<0.01	<0.01	<0.01	<0.01	<0.01	<0.01	<0.01		<0.01	<0.01*			
	06/06/17	8270C		<0.01			0.0081		0.0054	<0.01	<0.01			<0.01				<0.01	<0.01	<0.01	<0.01	<0.01	<0.01	<0.01	<0.01		<0.01	<0.01*			
	03/07/17	8270C		<0.01			0.026		0.0077	<0.01	<0.01			0.0004				<0.01	<0.01	<0.01	<0.01	<0.01	<0.01	<0.01	<0.01		<0.01	<0.01*			
	10/31/16	8270C		<0.01			0.0087		0.0068	0.0028	<0.01			0.0076				<0.01	<0.01	<0.01	<0.01	<0.01	<0.01	<0.01	<0.01		<0.01	<0.01*			
	09/09/16	8270C		<0.01			0.012		0.0046		<0.01			0.0038				0.003	<0.01	<0.01	<0.01	<0.01	<0.01	<0.01	<0.01		<0.01	<0.01*			
	06/09/16	8270C		<0.01			<0.02		0.0056		<0.01			0.0054					<0.01	<0.01	<0.01	<0.01	<0.01	<0.01	<0.01		<0.01	<0.01*			
	02/24/16	8270C		<0.01			<0.02		<0.01*		<0.01								<0.01	<0.01	<0.01	<0.01	<0.01	<0.01	<0.01		<0.01	<0.01*			
	11/05/15	8270C		<0.01			<0.02		<0.01*		<0.01								<0.01	<0.01	<0.01	<0.01	<0.01	<0.01	<0.01		<0.01	<0.01*			
	08/21/15	8270C		<0.01			<0.02		<0.01*		<0.01								<0.01	<0.01	<0.01	<0.01	<0.01	<0.01	<0.01		<0.01	<0.01*			
	06/09/15	8270C		<0.01			<0.02		<0.01*		<0.01								<0.01	<0.01	<0.01	<0.01	<0.01	<0.01	<0.01		<0.01	<0.01*			
	03/12/15	8270C		<0.01			<0.02		<0.01*		<0.01								<0.01	<0.01	<0.01	<0.01	<0.01	<0.01	<0.01		<0.01	<0.01*			
	11/17/14	8270C		<0.01			<0.02		0.012		<0.01								<0.01	<0.01	<0.01	<0.01	<0.01	<0.01	<0.01		<0.01	<0.01*			
	09/23/14	8270C		<0.01			<0.02		<0.01*		<0.01								<0.01	<0.01	<0.01	<0.01	<0.02	<0.01	<0.01		<0.01	<0.01*			
	04/09/14	8270C		<0.01			<0.02		<0.01*		<0.01								<0.01	<0.01	<0.01	<0.01	<0.02	<0.01	<0.01		<0.01	<0.01*			

8.17.4 MKTF WELLS

Semi-Volatile Organic Compound Analytical Result Summary

			PARAMETERS																												
		STANDARDS	Acenaphthene (mg/L)	Aniline (mg/L)	Anthracene (mg/L)	Benz(a) anthracene (mg/L)	Benzoic Acid (mg/L)	Benzyl alcohol (mg/L)	Bis(2-ethylhexyl) phthalate (mg/L)	Butyl benzyl phthalate (mg/L)	Carbazole (mg/L)	Chrysene (mg/L)	1,4-Dioxane (mg/L)	Di-n-octyl phthalate (mg/L)	Dibenzo furan (mg/L)	1,4-Dichloro benzene (mg/L)	Diethyl phthalate (mg/L)	Dimethyl phthalate (mg/L)	2,4-Dimethyl phenol (mg/L)	Fluorene (mg/L)	1-Methyl naphthalene (mg/L)	2-Methyl naphthalene (mg/L)	2-Methyl phenol (mg/L)	3+4-Methyl phenol (mg/L)	Naphthalene (mg/L)	Pentachloro phenol (mg/L)	Phenanthrene (mg/L)	Phenol (mg/L)	Pyrene (mg/L)	Pyridine (mg/L)	2,4,6-Trichlorophenol (mg/L)
		WQCC 20 NMAC 6.2.3103 (DEC 2018)	NE	NE	NE	NE	NE	NE	NE	NE	NE	NE	NE	NE	NE	NE	NE	NE	NE	NE	NE	NE	NE	NE	0.03	0.001	NE	0.005	NE	NE	NE
		40 CFR 141.61 MCL	NE	NE	NE	NE	NE	NE	0.006	NE	NE	NE	NE	NE	NE	0.075	NE	NE	NE	NE	NE	NE	NE	NE	NE	0.001	NE	NE	NE	NE	NE
		NMED Tap Water (JUNE 2019)	0.535	NE	1.72	0.00012	NE	NE	0.0556	NE	NE	0.0343	0.0046	NE	NE	0.302	14.8	0.612	0.354	0.288	0.0114	0.035	NE	NE	0.00165	0.0004	0.17	5.76	0.117	NE	0.0119
		EPA RSL for Tap Water (NOVEMBER 2019)	0.53	0.13	1.8	0.00003	75	2	0.056	0.16	NE	0.025	0.00046	0.2	0.0079	0.00048	15	NE	0.36	0.29	0.0011	0.036	0.93	0.93	0.00017	0.000041	NE	5.8	0.12	0.02	0.0041
Well ID	DATE SAMPLED	METHOD																													
MKTF-33	10/24/19	8270D		<0.0005			<0.0005		0.00187	<0.0005	<0.0005		<0.001	<0.0005				<0.0005	<0.0005	<0.0005	<0.0005	<0.0005	<0.0005	<0.0005	<0.0005		<0.0005	<0.0005			
	08/20/19	8270C		<0.01			<0.02		<0.01*	<0.01	<0.01			<0.01				<0.01	<0.01	<0.01	<0.01	<0.01	<0.01	<0.01	<0.01		<0.01	<0.01*			
	05/09/19	8270C		<0.01			<0.02		<0.01*	<0.01	<0.01			<0.01				<0.01	<0.01	<0.01	<0.01	<0.01	<0.01	<0.01	<0.01		<0.01	<0.01*			
	03/26/19	8270C		<0.01			0.008		<0.01*	<0.01	<0.01			<0.01				<0.01	<0.01	<0.01	<0.01	<0.01	<0.01	<0.01	<0.01		<0.01	<0.01*			
	11/28/18	8270C		<0.1			<0.2		<0.1*	<0.01	<0.1			<0.1				<0.1	<0.1	<0.1	<0.1*	<0.1*	<0.1	<0.1	<0.1*		<0.1	<0.1*			
	08/30/18	8270C		<0.01			0.0069		0.014	<0.01	<0.01			<0.01				<0.01	<0.01	<0.01	<0.01	<0.01	<0.01	<0.01	<0.01		<0.01	<0.01*			
	05/10/18	8270C		<0.01			0.011		<0.01*	<0.01	<0.01			<0.01				<0.01	<0.01	<0.01	<0.01	<0.01	<0.01	<0.01	<0.01		<0.01	<0.01*			
	02/08/18	8270C		<0.01			0.0072		<0.01*	<0.01	<0.01			<0.01				<0.01	<0.01	<0.01	<0.01	<0.01	<0.01	<0.01	<0.01		<0.01	<0.01*			
	11/28/17	8270C		<0.01			0.0045		0.005	<0.01	<0.01			<0.01				<0.01	<0.01	<0.01	<0.01	<0.01	<0.01	<0.01	<0.01		<0.01	<0.01*			
	09/25/17	8270C		<0.01			<0.02		<0.01*	<0.01	<0.01			<0.01				<0.01	<0.01	<0.01	<0.01	<0.01	<0.01	<0.01	<0.01		<0.01	<0.01*			
	06/08/17	8270C		<0.01			0.0068		<0.01*	<0.01	<0.01			<0.01				<0.01	<0.01	<0.01	<0.01	<0.01	<0.01	<0.01	<0.01		<0.01	<0.01*			
	03/08/17	8270C		<0.01			0.0077		0.0083	<0.01	<0.01			0.0037				<0.01	<0.01	<0.01	<0.01	<0.01	<0.01	<0.01	<0.01		<0.01	<0.01*			
	11/01/16	8270C		<0.01			0.013		0.0066	0.0027	<0.01			0.0078				<0.01	<0.01	<0.01	<0.01	<0.01	<0.01	<0.01	<0.01		<0.01	<0.01*			
	09/10/16	8270C		<0.01			0.0071		0.0036		<0.01			0.0035				0.0029	<0.01	<0.01	<0.01	<0.01	<0.01	<0.01	<0.01		<0.01	<0.01*			
	06/10/16	8270C		<0.01			<0.02		0.0032		<0.01			0.0049					<0.01	<0.01	<0.01	<0.01	<0.01	<0.01	<0.01		<0.01	<0.01*			
	02/25/16	8270C		<0.01			<0.02		<0.01*		<0.01								<0.01	<0.01	<0.01	<0.01	<0.01	<0.01	<0.01		<0.01	<0.01*			
	11/09/15	8270C		<0.01			<0.02		<0.01*		<0.01								<0.01	<0.01	<0.01	<0.01	<0.01	<0.01	<0.01		<0.01	<0.01*			
	08/21/15	8270C		<0.01			<0.02		<0.01*		<0.01								<0.01	<0.01	<0.01	<0.01	<0.01	<0.01	<0.01		<0.01	<0.01*			
	06/09/15	8270C		<0.01			<0.02		<0.01*		<0.01								<0.01	<0.01	<0.01	<0.01	<0.01	<0.01	<0.01		<0.01	<0.01*			
	03/12/15	8270C		<0.01			<0.02		<0.01*		<0.01								<0.01	<0.01	<0.01	<0.01	<0.01	<0.01	<0.01		<0.01	<0.01*			
	11/17/14	8270C		<0.01			<0.02		0.012		<0.01								<0.01	<0.01	<0.01	<0.01	<0.01	<0.01	<0.01		<0.01	<0.01*			
	09/23/14	8270C		<0.01			<0.02		<0.01*		<0.01								<0.01	<0.01	<0.01	<0.01	<0.02	<0.01	<0.01		<0.01	<0.01*			
	04/10/14	8270C		<0.01			<0.02		<0.01*		<0.01								<0.01	<0.01	<0.01	<0.01	<0.02	<0.01	<0.01		<0.01	<0.01*			
MKTF-34	10/29/19	8270D		<0.0005			<0.0005		<0.0005		<0.0005		0.00296	<0.1					<0.0005	<0.0005	<0.0005	<0.0005	<0.0005	<0.0005	<0.0005		<0.0005	<0.0005			
	08/19/19	8270C		<0.01			<0.02		<0.01*		<0.01			<0.01					<0.01	<0.01	<0.01	<0.01	<0.01	<0.01	<0.01		<0.01	<0.01*			
	05/09/19	8270C		<0.01			<0.02		<0.01*		<0.01			<0.01					<0.01	<0.01	<0.01	<0.01	<0.01	<0.01	<0.01		<0.01	<0.01*			
	03/26/19	8270C		<0.01			<0.02		<0.01*		<0.01			<0.01					<0.01	<0.01	<0.01	<0.01	<0.01	<0.01	<0.01		<0.01	<0.01*			
	11/28/18	8270C		<0.1			<0.2		<0.1*		<0.1			<0.1					<0.1	<0.1	<0.1*	<0.1*	<0.1	<0.1	<0.1*		<0.1	<0.1*			
	08/24/18	8270C		<0.01			0.0071		<0.01*		<0.01			<0.01					<0.01	<0.01	<0.01	<0.01	<0.01	<0.01	<0.01		<0.01	<0.01*			
	05/04/18	8270C		<0.01			0.011		<0.01*		<0.01			<0.01					<0.01	<0.01	<0.01	<0.01	<0.01	<0.01	<0.01		<0.01	<0.01*			
	02/16/18	8270C		<0.01			0.0089		<0.01*		<0.01			<0.01					<0.01	<0.01	<0.01	<0.01	<0.01	<0.01	<0.01		<0.01	<0.01*			
	12/01/17	8270C		<0.01			0.0065		<0.01*		<0.01			<0.01					<0.01	<0.01	<0.01	<0.01	<0.01	<0.01	<0.01		<0.01	<0.01*			
	09/26/17	8270C		<0.01			0.006		0.21		<0.01			<0.01					<0.01	<0.01	<0.01	<0.01	<0.01	<0.01	0.0048		<0.01	<0.01*			
	06/14/17	8270C		<0.01			0.009		0.0049		<0.01			<0.01					<0.01	<0.01	<0.01	<0.01	<0.01	<0.01	<0.01		<0.01	<0.01*			
	03/01/17	8270C		<0.01			<0.02		0.0078		<0.01			<0.01					<0.01	<0.01	<0.01	<0.01	<0.01	<0.01	<0.01		<0.01	<0.01*			
	11/08/16	8270C		<0.01			0.0083		0.0064		<0.01			0.0067					<0.01	<0.01	<0.01	<0.01	<0.01	<0.01	<0.01		<0.01	<0.01*			
	09/13/16	8270C		<0.01			0.0084		0.0033		<0.01			<0.01					<0.01	<0.01	<0.01	<0.01	<0.01	<0.01	<0.01		<0.01	<0.01*			
	06/10/16	8270C		<0.01			<0.02		0.0034		<0.01			0.0054					<0.01	<0.01	<0.01	<0.01	<0.01	<0.01	<0.01		<0.01	<0.01*			
	02/25/16	8270C		<0.01			<0.02		<0.01*		<0.01								<0.01	<0.01	<0.01	<0.01	<0.01	<0.01	<0.01		<0.01	<0.01*			
	11/03/15	8270C		<0.01			<0.02		<0.01*		<0.01								<0.01	<0.01	<0.01	<0.01	<0.01	<0.01	<0.01		<0.01	<0.01*			
	08/18/15	8270C		<0.01			<0.02		<0.01*		<0.01								<0.01	<0.01	<0.01	<0.01	<0.01	<0.01	<0.01		<0.01	<0.01*			
	06/08/15	8270C		<0.01			<0.02		<0.01*		<0.01								<0.01	<0.01	<0.01	<0.01	<0.01	<0.01	<0.01		<0.01	<0.01*			
	03/12/15	8270C		<0.01			<0.02		<0.01*		<0.01								<0.01	<0.01	<0.01	<0.01	<0.01	<0.01	<0.01		<0.01	<0.01*			
	11/17/14	8270C		<0.01			<0.02		0.014		<0.01								<0.01	<0.01	<0.01	<0.01	<0.01	<0.01	<0.01		<0.01	<0.01*			
	09/24/14	8270C		<0.01			<0.02		<0.01*		<0.01								<0.01	<0.01	<0.01	<0.01	<0.01	<0.01	<0.01		<0.01	<0.01*			
	04/09/14	8270C		<0.01			<0.02		<0.01*		<0.01								<0.01	<0.01	<0.01	<0.01	<0.025	<0.01	<0.01		<0.01	<0.01*			

8.17.4 MKTF WELLS

Semi-Volatile Organic Compound Analytical Result Summary

			PARAMETERS																												
		STANDARDS	Acenaphthene (mg/L)	Aniline (mg/L)	Anthracene (mg/L)	Benz(a) anthracene (mg/L)	Benzoic Acid (mg/L)	Benzyl alcohol (mg/L)	Bis(2-ethylhexyl) phthalate (mg/L)	Butyl benzyl phthalate (mg/L)	Carbazole (mg/L)	Chrysene (mg/L)	1,4-Dioxane (mg/L)	Di-n-octyl phthalate (mg/L)	Dibenzo furan (mg/L)	1,4-Dichloro benzene (mg/L)	Diethyl phthalate (mg/L)	Dimethyl phthalate (mg/L)	2,4-Dimethyl phenol (mg/L)	Fluorene (mg/L)	1-Methyl naphthalene (mg/L)	2-Methyl naphthalene (mg/L)	2-Methyl phenol (mg/L)	3+4-Methyl phenol (mg/L)	Naphthalene (mg/L)	Pentachloro phenol (mg/L)	Phenanthrene (mg/L)	Phenol (mg/L)	Pyrene (mg/L)	Pyridine (mg/L)	2,4,6-Trichlorophenol (mg/L)
		WQCC 20 NMAC 6.2.3103 (DEC 2018)	NE	NE	NE	NE	NE	NE	NE	NE	NE	NE	NE	NE	NE	NE	NE	NE	NE	NE	NE	NE	NE	NE	0.03	0.001	NE	0.005	NE	NE	NE
		40 CFR 141.61 MCL	NE	NE	NE	NE	NE	NE	0.006	NE	NE	NE	NE	NE	NE	0.075	NE	NE	NE	NE	NE	NE	NE	NE	NE	0.001	NE	NE	NE	NE	NE
		NMED Tap Water (JUNE 2019)	0.535	NE	1.72	0.00012	NE	NE	0.0556	NE	NE	0.0343	0.0046	NE	NE	0.302	14.8	0.612	0.354	0.288	0.0114	0.035	NE	NE	0.00165	0.0004	0.17	5.76	0.117	NE	0.0119
		EPA RSL for Tap Water (NOVEMBER 2019)	0.53	0.13	1.8	0.00003	75	2	0.056	0.16	NE	0.025	0.00046	0.2	0.0079	0.00048	15	NE	0.36	0.29	0.0011	0.036	0.93	0.93	0.00017	0.000041	NE	5.8	0.12	0.02	0.0041
Well ID	DATE SAMPLED	METHOD																													
MKTF-35	10/29/19	8270D	0.00122	<0.0005			<0.0005		<0.0005	<0.0005	<0.0005		0.00259	<0.0005	0.00108	0.00316			<0.0005	<0.0005	<0.0005	<0.0005	<0.0005	<0.0005	<0.0005		<0.0005	0.00316			
	08/19/19	8270C		<0.01			<0.02		*<0.01**	<0.01	<0.01			<0.01		<0.01			<0.01	<0.01	<0.01	<0.01	<0.01	<0.01	<0.01		<0.01	*<0.01**			
	05/16/19	8270C		<0.01			<0.02		0.0043	<0.01	<0.01			<0.01		<0.01			<0.01	<0.01	<0.01	<0.01	<0.01	<0.01	<0.01		<0.01	*<0.01**			
	03/26/19	8270C		<0.01			0.0075		*<0.01**	<0.01	<0.01			<0.01		<0.01			<0.01	<0.01	<0.01	<0.01	<0.01	<0.01	<0.01		<0.01	*<0.01**			
	11/28/18	8270C		<0.01			0.018		*<0.01**	<0.01	<0.01			<0.01		<0.01			<0.01	<0.01	<0.01	<0.01	<0.01	<0.01	<0.01		<0.01	*<0.01**			
	08/23/18	8270C		<0.01			0.0071		*<0.01**	<0.01	<0.01			<0.01		<0.01			<0.01	<0.01	<0.01	<0.01	<0.01	<0.01	<0.01		<0.01	*<0.01**			
	05/03/18	8270C		<0.01			0.014		*<0.01**	<0.01	<0.01			<0.01		<0.01			<0.01	<0.01	<0.01	<0.01	<0.01	<0.01	<0.01		<0.01	*<0.01**			
	02/15/18	8270C		<0.01			0.008		**0.0067**	<0.01	<0.01			<0.01		0.0031			<0.01	<0.01	<0.01	<0.01	<0.01	<0.01	<0.01		<0.01	*<0.01**			
	11/30/17	8270C		<0.01			0.0083		**0.011**	<0.01	<0.01			<0.01					<0.01	<0.01	<0.01	<0.01	<0.01	<0.01	<0.01		<0.01	*<0.01**			
	09/27/17	8270C		<0.01			0.0075		0.0057	<0.01	<0.01			<0.01					<0.01	<0.01	<0.01	<0.01	<0.01	<0.01	<0.01		<0.01	*<0.01**			
	06/14/17	8270C		<0.01			0.013		*<0.01**	<0.01	<0.01			<0.01					<0.01	<0.01	<0.01	<0.01	<0.01	<0.01	<0.01		<0.01	*<0.01**			
	03/01/17	8270C		<0.01			<0.02		**0.0076**	<0.01	<0.01			<0.01					<0.01	<0.01	<0.01	<0.01	<0.01	<0.01	<0.01		<0.01	*<0.01**			
	11/03/16	8270C		<0.05			0.055		**0.034**	0.014	<0.05			0.034					<0.05	<0.05	*<0.05**	*<0.05**	<0.05	<0.05	*<0.05**		<0.05	*<0.05**			
	09/13/16	8270C		<0.01			0.005		*<0.01**		<0.01			<0.01					<0.01	<0.01	<0.01	<0.01	<0.01	<0.01	<0.01		<0.01	*<0.01**			
	06/10/16	8270C		<0.01			<0.02		0.0032		<0.01			0.0059					<0.01	<0.01	<0.01	<0.01	<0.01	<0.01	<0.01		<0.01	*<0.01**			
	02/26/16	8270C		<0.01			<0.02		*<0.01**		<0.01								<0.01	<0.01	<0.01	<0.01	<0.01	<0.01	<0.01		<0.01	*<0.01**			
	11/03/15	8270C		<0.01			<0.02		*<0.01**		<0.01								<0.01	<0.01	<0.01	<0.01	<0.01	<0.01	<0.01		<0.01	*<0.01**			
	08/18/15	8270C		<0.01			<0.02		*<0.01**		<0.01								<0.01	<0.01	<0.01	<0.01	<0.01	<0.01	<0.01		<0.01	*<0.01**			
	06/04/15	8270C		<0.01			<0.02		*<0.01**		<0.01								<0.01	<0.01	<0.01	<0.01	<0.01	<0.01	<0.01		<0.01	*<0.01**			
	03/17/15	8270C		<0.01			<0.02		*<0.01**		<0.01								<0.01	<0.01	<0.01	<0.01	<0.01	<0.01	0.028		<0.01	*<0.01**			
	11/21/14	8270C		<0.01			<0.02		*<0.01**		<0.01								<0.01	<0.01	**0.034**	**0.045**	<0.01	<0.01	**0.036**		<0.01	*<0.01**			
MKTF-36	11/06/19	--	SPH Detected - No samples were collected.																												
	08/19/19	--	Well paved over and inaccessible - no samples were collected																												
	05/14/19	--	Well paved over and inaccessible - no samples were collected																												
	03/25/19	--	Well paved over and inaccessible - no samples were collected																												
	11/29/18	--	Well paved over and inaccessible - no samples were collected																												
	09/05/18	8270C	0.011	<0.01			<0.02		*<0.01**	<0.01	0.0089			<0.01	*<0.01**				0.0092	0.014	**0.27**	**0.41**	<0.01	<0.01	**0.42**		0.01	**0.048**			
	05/03/18	8270C	0.0078	<0.01			<0.02		*<0.01**	<0.01	0.0074			<0.01	*<0.01**				<0.01	0.01	**0.19**	**0.32**	<0.01	<0.01	**0.33**		0.0063	**0.048**			
	02/15/18	8270C	0.0097	<0.01			<0.02		0.0052	<0.01	0.0083			<0.01	0.0045				<0.01	0.014	**0.31**	**0.45**	<0.01	<0.01	**0.44**		0.0086	**0.067**			
	11/30/17	8270C	<0.1	<0.1			<0.2		*<0.1**	<0.1	<0.1			<0.1	*<0.1**				<0.1	<0.1	**0.29**	**0.44**	<0.1	<0.1	**0.42**		<0.1	**0.062**			
	09/27/17	8270C	<0.1	<0.1			0.064		**0.21**	<0.1	<0.1			<0.1	*<0.1**				<0.1	<0.1	**0.27**	**0.44**	<0.1	<0.1	**0.36**		<0.1	*<0.1**			
	06/14/17	8270C	0.0099	<0.01			<0.02		*<0.01**	<0.01	0.0099			<0.1	0.0048				<0.01	0.012	**0.35**	**0.54**	<0.01	<0.01	**0.52**		0.0087	**0.08**			
	03/01/17	8270C	0.0067	<0.01			<0.02		**0.0072**	<0.01	0.0064			<0.01					<0.01	0.0086	**0.19**	**0.32**	<0.01	<0.01	**0.28**		0.0057	**0.029**			
	11/08/16	8270C	0.0051	<0.01			<0.02		**0.0071**	0.0027	0.006			0.008					<0.01	0.008	**0.15**	**0.23**	<0.01	<0.01	**0.27**		0.0044	**0.028**			
	09/13/16	--	SPH Detected - No samples were collected.																												
	06/10/16	--	SPH Detected - No samples were collected.																												
	03/17/16	--	SPH Detected - No samples were collected.																												
	11/03/15	--	SPH Detected - No samples were collected.																												
	08/18/15	8270C		<0.01			<0.02		*<0.01**		<0.01								<0.01	0.012	**0.34**	**0.51**	<0.01	<0.01	**0.52**		<0.01	**0.048**			
	06/04/15	8270C		<0.01			<0.02		*<0.01**		<0.01								<0.01	0.013	**0.33**	**0.51**	<0.01	<0.01	**0.49**		<0.01	**0.056**			
	03/17/15	8270C		<0.01			<0.02		*<0.01**		<0.01								<0.01	0.01	**0.24**	**0.39**	<0.01	<0.01	**0.47**		<0.01	**0.044**			
	11/21/14	8270C		<0.01			<0.02		*<0.01**		<0.01								<0.01	<0.01	**0.16**	**0.23**	<0.01	<0.01	**0.28**		<0.01	**0.015**			
MKTF-37	10/28/19	--	SPH Detected - No samples were collected.																												
	08/23/19	--	SPH Detected - No samples were collected.																												
	05/16/19	--	SPH Detected - No samples were collected.																												
	03/26/19	8270C		<0.01			<0.02		0.01		<0.01			<0.01		0.0063			<0.01	<0.01	**0.15**	**0.22**	<0.01	<0.01	**0.39**		<0.01	**0.0084**			
	08/23/18	8270C		<0.01			0.016		*<0.01**		<0.01			<0.01		0.0062			<0.01	<0.01	**0.068**	**0.084**	<0.01	<0.01	**0.28**		<0.01	**0.018**			
	05/03/18	8270C		<0.01			<0.02		*<0.01**		<0.01			<0.01		0.007			<0.01	<0.01	**0.088**	**0.1**	<0.01	<0.01	**0.28**		<0.01	**0.023**			
	02/15/18	--	SPH Detected - No samples were collected.																												
	11/30/17	--	SPH Detected - No samples were collected.																												
	09/27/17	--	SPH Detected - No samples were collected.																												
	06/14/17	--	SPH Detected - No samples were collected.																												
	03/01/17	8270C		<0.01			<0.02		**0.02**		<0.01			<0.01		<0.01			<0.01	<0.01	**0.42**	**0.69**	<0.01	<0.01	**0.89**		<0.01	*<0.01**			
	11/03/16	8270C		<0.01			0.019		**0.0084**		<0.01			0.0069		0.0032			<0.01	<0.01	**0.051**	**0.064**	0.012	0.0035	**0.2**		<0.01	**0.0074**			
	08/19/15	8270C		<0.01			<0.02		*<0.01**		<0.01								<0.01	<0.01	**0.83**	**1.4**	<0.01	<0.01	**2.7**		<0.01	*<0.01**			
	06/04/15	8270C		<0.01			<0.01		*<0.01**		<0.01								<0.01	<0.01	**0.074**	**0.11**	0.028	<0.01	**0.23**		<0.01	*<0.01**			
	03/17/15	8270C		<0.01			<0.02		*<0.01**		<0.01								<0.01	<0.01	**0.072**	**0.096**	0.033	<0.01	**0.16**		<0.01	*<0.01**			
	11/21/14	8270C		<0.01			<0.02		*<0.01**		<0.01								<0.01	<0.01	**0.05**	**0.056**	<0.01	<0.01	**0.27**		<0.01	*<0.01**			

8.17.4 MKTF WELLS

Semi-Volatile Organic Compound Analytical Result Summary

			PARAMETERS																												
		STANDARDS	Acenaphthene (mg/L)	Aniline (mg/L)	Anthracene (mg/L)	Benz(a) anthracene (mg/L)	Benzoic Acid (mg/L)	Benzyl alcohol (mg/L)	Bis(2-ethylhexyl) phthalate (mg/L)	Butyl benzyl phthalate (mg/L)	Carbazole (mg/L)	Chrysene (mg/L)	1,4-Dioxane (mg/L)	Di-n-octyl phthalate (mg/L)	Dibenzo furan (mg/L)	1,4-Dichloro benzene (mg/L)	Diethyl phthalate (mg/L)	Dimethyl phthalate (mg/L)	2,4-Dimethyl phenol (mg/L)	Fluorene (mg/L)	1-Methyl naphthalene (mg/L)	2-Methyl naphthalene (mg/L)	2-Methyl phenol (mg/L)	3+4-Methyl phenol (mg/L)	Naphthalene (mg/L)	Pentachloro phenol (mg/L)	Phenanthrene (mg/L)	Phenol (mg/L)	Pyrene (mg/L)	Pyridine (mg/L)	2,4,6-Trichlorophenol (mg/L)
		WQCC 20 NMAC 6.2.3103 (DEC 2018)	NE	NE	NE	NE	NE	NE	NE	NE	NE	NE	NE	NE	NE	NE	NE	NE	NE	NE	NE	NE	NE	NE	0.03	0.001	NE	0.005	NE	NE	NE
		40 CFR 141.61 MCL	NE	NE	NE	NE	NE	NE	0.006	NE	NE	NE	NE	NE	NE	0.075	NE	NE	NE	NE	NE	NE	NE	NE	NE	0.001	NE	NE	NE	NE	NE
		NMED Tap Water (JUNE 2019)	0.535	NE	1.72	0.00012	NE	NE	0.0556	NE	NE	0.0343	0.0046	NE	NE	0.302	14.8	0.612	0.354	0.288	0.0114	0.035	NE	NE	0.00165	0.0004	0.17	5.76	0.117	NE	0.0119
		EPA RSL for Tap Water (NOVEMBER 2019)	0.53	0.13	1.8	0.00003	75	2	0.056	0.16	NE	0.025	0.00046	0.2	0.0079	0.00048	15	NE	0.36	0.29	0.0011	0.036	0.93	0.93	0.00017	0.000041	NE	5.8	0.12	0.02	0.0041
Well ID	DATE SAMPLED	METHOD																													
MKTF-38	12/03/19	8270D		<0.0005			<0.0005		0.00071	<0.0005	<0.0005		0.00114	<0.0005				<0.0005	<0.0005	<0.0005	<0.0005	<0.0005	<0.0005	<0.0005	<0.0005		<0.0005	<0.0005			
	08/20/19	8270C		<0.01			<0.02		*<0.01**	<0.01	<0.01			<0.01				<0.01	<0.01	<0.01	<0.01	<0.01	<0.01	<0.01	<0.01		<0.01	*<0.01**			
	06/27/19	8270C		<0.01			<0.02		*<0.01**	<0.01	<0.01			<0.01				<0.01	<0.01	<0.01	<0.01	<0.01	<0.01	<0.01	<0.01		<0.01	*<0.01**			
	05/14/19	8270C		<0.01			<0.02		*<0.01**	<0.01	<0.01			<0.01				<0.01	<0.01	<0.01	<0.01	<0.01	<0.01	<0.01	<0.01		<0.01	*<0.01**			
	03/26/19	8270C		<0.01			0.0068		*<0.01**	<0.01	<0.01			<0.01				<0.01	<0.01	<0.01	<0.01	<0.01	<0.01	<0.01	<0.01		<0.01	*<0.01**			
	11/20/18	8270C		<0.1			<0.2		*<0.1**	<0.1	<0.1			<0.1				<0.1	<0.1	<0.1	*<0.1**	*<0.1**	<0.1	<0.1	*<0.1**		<0.1	*<0.1**			
	08/21/18	8270C		<0.01			0.0086		*<0.01**	<0.01	<0.01			<0.01				<0.01	<0.01	<0.01	<0.01	<0.01	<0.01	<0.01	<0.01		<0.01	*<0.01**			
	05/03/18	8270C		<0.01			<0.02		*<0.01**	<0.01	<0.01			<0.01				<0.01	<0.01	<0.01	<0.01	<0.01	<0.01	<0.01	<0.01		<0.01	*<0.01**			
	02/12/18	8270C		<0.01			<0.02		*<0.01**	<0.01	<0.01			<0.01				<0.01	<0.01	<0.01	<0.01	<0.01	<0.01	<0.01	<0.01		<0.01	*<0.01**			
	11/30/17	8270C		<0.01			<0.02		*<0.01**	<0.01	<0.01			<0.01				<0.01	<0.01	<0.01	<0.01	<0.01	<0.01	<0.01	<0.01		<0.01	*<0.01**			
	09/28/17	8270C		<0.01			<0.02		*<0.01**	<0.01	<0.01			<0.01				0.0062	<0.01	<0.01	<0.01	<0.01	<0.01	<0.01	<0.01		<0.01	*<0.01**			
	06/21/17	8270C		<0.01			0.0066		*<0.01**	<0.01	<0.01			0.0048				<0.01	<0.01	<0.01	<0.01	<0.01	<0.01	<0.01	<0.01		<0.01	*<0.01**			
	03/14/17	8270C		<0.01			0.0075		0.0074	<0.01	<0.01			0.0035				<0.01	<0.01	<0.01	<0.01	<0.01	<0.01	<0.01	<0.01		<0.01	*<0.01**			
	11/01/16	8270C		<0.01			0.0087		0.0064	0.0027	<0.01			0.0078					<0.01	<0.01	<0.01	<0.01	<0.01	<0.01	<0.01		<0.01	*<0.01**			
	09/13/16	8270C		<0.01			0.0046		0.0031		<0.01			<0.01					<0.01	<0.01	<0.01	<0.01	<0.01	<0.01	<0.01		<0.01	*<0.01**			
	06/08/16	8270C		<0.01			<0.02		0.0033		<0.01			0.005					<0.01	<0.01	<0.01	<0.01	<0.01	<0.01	<0.01		<0.01	*<0.01**			
	02/29/16	8270C		<0.01			<0.02		*<0.01**		<0.01								<0.01	<0.01	<0.01	<0.01	<0.01	<0.01	<0.01		<0.01	*<0.01**			
	11/09/15	8270C		<0.01			<0.02		*<0.01**		<0.01								<0.01	<0.01	<0.01	<0.01	<0.01	<0.01	<0.01		<0.01	*<0.01**			
	08/24/15	8270C		<0.01			<0.02		*<0.01**		<0.01								<0.01	<0.01	<0.01	<0.01	<0.01	<0.01	<0.01		<0.01	*<0.01**			
	06/10/15	8270C		<0.01			<0.02		*<0.01**		<0.01								<0.01	<0.01	<0.01	<0.01	<0.01	<0.01	<0.01		<0.01	*<0.01**			
	03/16/15	8270C		<0.01			<0.02		*<0.01**		<0.01								<0.01	<0.01	<0.01	<0.01	<0.01	<0.01	<0.01		<0.01	*<0.01**			
	11/21/14	8270C		<0.01			<0.02		*<0.01**		<0.01								<0.01	<0.01	<0.01	<0.01	<0.01	<0.01	<0.01		<0.01	*<0.01**			
	11/21/14	8270C		<0.01			<0.02		*<0.01**		<0.01								<0.01	<0.01	<0.01	<0.01	<0.02	<0.01	<0.01		<0.01	*<0.01**			
MKTF-39	11/05/19	8270D	0.00411	<0.005			<0.01		<0.005		0.0138	0.00224	0.0109	<0.005	<0.005			<0.005	<0.005	0.0266	0.152	0.0102	<0.005	<0.005	0.0198		0.0372	*<0.005**	0.00436		
	08/20/19	8270C	<0.01	<0.01			<0.02		*<0.01**		0.012	<0.01		<0.01	*<0.01**			<0.01	<0.01	0.014	0.12	<0.01	<0.01	<0.01	0.015		0.017	*<0.01**	<0.01		
	06/05/19	8270C	<0.01	<0.01			<0.02		0.0099		0.0089	0.0046		0.0045	*<0.01**			<0.01	<0.01	0.047	0.34	0.23	<0.01	<0.01	0.057		0.086	*<0.01**	0.015		
	03/28/19	--	Located within barricaded area - not accessible to collect samples																												
	11/20/18	8270C	<0.01	<0.01			<0.02		*<0.01**		0.0089			<0.01	*<0.01**			<0.01	<0.01	<0.01	0.039	0.013	<0.01	<0.01	0.02		<0.01	*<0.01**	<0.01		
	08/21/18	8270C	<0.01	<0.01			<0.02		*<0.01**		0.01			<0.01	*<0.01**			<0.01	<0.01	0.0099	0.12	0.053	<0.01	<0.01	0.057		0.0096	*<0.01**	<0.01		
	05/06/18	8270C	<0.01	<0.01			<0.01		*<0.01**		0.014			<0.01	0.0083			<0.01	<0.01	0.021	0.16	0.061	<0.01	<0.01	0.058		0.024	*<0.01**	<0.01		
	02/08/18	8270C	<0.01	<0.01			0.015		*<0.01**		0.0068			<0.01	*<0.01**			<0.01	<0.01	0.0077	0.081	0.034	<0.01	<0.01	0.038		0.0064	*<0.01**	<0.01		
	11/28/17	8270C	<0.1	<0.1			0.06		*<0.1**		<0.1			<0.1	*<0.1**			<0.1	<0.1	<0.1	0.12	0.052	<0.1	<0.1	0.064		<0.1	*<0.1**	<0.1		
	09/28/17	8270C	<0.1	<0.1			0.069		*<0.1**		<0.1			<0.1	*<0.1**			0.051	<0.1	<0.1	0.17	0.048	<0.1	<0.1	0.051		<0.1	*<0.1**	<0.1		
	06/08/17	8270C	<0.05	<0.05			<0.1		*<0.05**		<0.05			<0.05	*<0.05**			<0.05	<0.05	0.041	0.36	0.11	<0.05	<0.05	0.098		0.074	*<0.05**	<0.05		
	03/14/17	8270C	<0.01	<0.01			<0.02		0.0072		0.016			0.0035	*<0.01**			<0.01	<0.01	0.01	0.13	0.059	<0.01	<0.01	0.065		0.014	*<0.01**	0.004		
	11/01/16	8270C	0.0026	<0.01			0.016		0.0067		0.016			0.007	0.0032			<0.01	<0.01	0.0086	0.098	0.039	<0.01	<0.01	0.054		0.0074	*<0.01**	0.0048		
	09/13/16	8270C		<0.01			0.012		0.0026		0.016			<0.01	0.0026			<0.01	<0.01	0.0078	0.077	0.028	<0.01	<0.01	0.044		0.0067	*<0.01**			
	06/08/16	8270C		<0.05			<0.1		0.019		0.026			0.025				0.014	<0.05	<0.05	0.11	0.042	<0.05	<0.05	0.049		0.013	*<0.05**			
	03/03/16	8270C		<0.01			<0.02		*<0.01**		0.028								<0.01	0.01	0.11	0.037	<0.01	<0.01	0.045		0.00079	*<0.01**			
	11/09/15	8270C		<0.01			<0.02		*<0.01**		0.021								<0.01	<0.01	0.089	0.032	<0.01	<0.01	0.062		<0.01	*<0.01**			
	08/23/15	8270C		<0.01			<0.02		*<0.01**		0.025								<0.01	<0.01	0.084	0.021	<0.01	<0.01	0.051		<0.01	*<0.01**			
	06/10/15	8270C		<0.01			<0.02		*<0.01**		0.026								<0.01	0.013	0.14	0.043	<0.01	<0.01	0.064		0.014	*<0.01**			
	03/16/15	8270C		<0.01			<0.02		*<0.01**		0.011								<0.01	<0.01	0.056	<0.01	<0.01	<0.01	0.02		<0.01	*<0.01**			
	11/18/14	8270C		<0.01			<0.02		0.012		0.021								<0.01	<0.01	0.079	<0.01	<0.02	<0.01	<0.01		<0.01	*<0.01**			

8.17.4 MKTF WELLS

Semi-Volatile Organic Compound Analytical Result Summary

			PARAMETERS																												
		STANDARDS	Acenaphthene (mg/L)	Aniline (mg/L)	Anthracene (mg/L)	Benz(a) anthracene (mg/L)	Benzoic Acid (mg/L)	Benzyl alcohol (mg/L)	Bis(2-ethylhexyl) phthalate (mg/L)	Butyl benzyl phthalate (mg/L)	Carbazole (mg/L)	Chrysene (mg/L)	1,4-Dioxane (mg/L)	Di-n-octyl phthalate (mg/L)	Dibenzo furan (mg/L)	1,4-Dichloro benzene (mg/L)	Diethyl phthalate (mg/L)	Dimethyl phthalate (mg/L)	2,4-Dimethyl phenol (mg/L)	Fluorene (mg/L)	1-Methyl naphthalene (mg/L)	2-Methyl naphthalene (mg/L)	2-Methyl phenol (mg/L)	3+4-Methyl phenol (mg/L)	Naphthalene (mg/L)	Pentachloro phenol (mg/L)	Phenanthrene (mg/L)	Phenol (mg/L)	Pyrene (mg/L)	Pyridine (mg/L)	2,4,6-Trichlorophenol (mg/L)
		WQCC 20 NMAC 6.2.3103 (DEC 2018)	NE	NE	NE	NE	NE	NE	NE	NE	NE	NE	NE	NE	NE	NE	NE	NE	NE	NE	NE	NE	NE	NE	0.03	0.001	NE	0.005	NE	NE	NE
		40 CFR 141.61 MCL	NE	NE	NE	NE	NE	NE	0.006	NE	NE	NE	NE	NE	NE	0.075	NE	NE	NE	NE	NE	NE	NE	NE	NE	0.001	NE	NE	NE	NE	NE
		NMED Tap Water (JUNE 2019)	0.535	NE	1.72	0.00012	NE	NE	0.0556	NE	NE	0.0343	0.0046	NE	NE	0.302	14.8	0.612	0.354	0.288	0.0114	0.035	NE	NE	0.00165	0.0004	0.17	5.76	0.117	NE	0.0119
		EPA RSL for Tap Water (NOVEMBER 2019)	0.53	0.13	1.8	0.00003	75	2	0.056	0.16	NE	0.025	0.00046	0.2	0.0079	0.00048	15	NE	0.36	0.29	0.0011	0.036	0.93	0.93	0.00017	0.000041	NE	5.8	0.12	0.02	0.0041
Well ID	DATE SAMPLED	METHOD																													
MKTF-40	10/22/19	8270D		<0.0005			<0.0005		<0.0005	<0.0005	<0.0005		0.00868	<0.0005				<0.0005	<0.0005	<0.0005	<0.0005	<0.0005	<0.0005	<0.0005	<0.0005		<0.0005	<0.0005	<0.0005	<0.0005	
	08/22/19	8270C		<0.01			<0.02		<0.01*	<0.01	<0.01			<0.01				<0.01	<0.01	<0.01	<0.01	<0.01*	<0.1	<0.01	<0.01		<0.01	<0.01*			
	05/06/19	8270C		<0.01			<0.02		<0.01*	<0.01	<0.01			<0.01				<0.01	<0.01	<0.01	<0.01	<0.01	<0.01	<0.01	<0.01		<0.01	<0.01*			
	02/20/19	8270C		<0.01			0.0082		<0.01*	<0.01	<0.01			<0.01				<0.01	<0.01	<0.01	<0.01	<0.01	<0.01	<0.01	<0.01		<0.01	<0.01*			
	11/15/18	8270C		<0.01			<0.02		<0.01*	<0.01	<0.01			<0.01				<0.01	<0.01	<0.01	<0.01	<0.01	<0.01	<0.01	<0.01		<0.01	<0.01*			
	08/17/18	8270C		<0.01			0.0068		<0.01*	<0.01	<0.01			<0.01				<0.01	<0.01	<0.01	<0.01	<0.01	<0.01	<0.01	<0.01		<0.01	<0.01*			
	05/06/18	8270C		<0.01			<0.02		<0.01*	<0.01	<0.01			<0.01				<0.01	<0.01	<0.01	<0.01	<0.01	<0.01	<0.01	<0.01		<0.01	<0.01*			
	02/05/18	8270C		<0.01			0.0046		<0.01*	<0.01	<0.01			<0.01				<0.01	<0.01	<0.01	<0.01	<0.01	<0.01	<0.01	<0.01		<0.01	<0.01*			
	11/21/17	8270C		<0.01			0.0065		<0.01*	<0.01	<0.01			<0.01				<0.01	<0.01	<0.01	<0.01	<0.01	<0.01	<0.01	<0.01		<0.01	<0.01*			
	09/25/17	8270C		<0.01			0.0069		0.026	<0.01	<0.01			<0.01				<0.01	<0.01	<0.01	<0.01	<0.01	<0.01	<0.01	<0.01		<0.01	<0.01*			
	06/05/17	8270C		<0.01			0.0085		0.0082	<0.01	<0.01			0.0053				<0.01	<0.01	<0.01	<0.01	<0.01	<0.01	<0.01	<0.01		<0.01	<0.01*			
	03/07/17	8270C		<0.01			0.01		0.0076	<0.01	<0.01			0.0036				<0.01	<0.01	<0.01	<0.01	<0.01	<0.01	<0.01	<0.01		<0.01	<0.01*			
	10/31/16	8270C		<0.01			0.0085		0.0066	0.0028	<0.01			0.0084				<0.01	<0.01	<0.01	<0.01	<0.01	<0.01	<0.01	<0.01		<0.01	<0.01*			
	09/08/16	8270C		<0.01			0.0086		0.0033		<0.01			0.0033				0.003	<0.01	<0.01	<0.01	<0.01	<0.01	<0.01	<0.01		<0.1	<0.01*			
	06/09/16	8270C		<0.01			<0.02		0.004		<0.01			0.0049					<0.01	<0.01	<0.01	<0.01	<0.01	<0.01	<0.01		<0.01	<0.02*			
	02/23/16	8270C		<0.01			<0.02		<0.01*		<0.01								<0.01	<0.01	<0.01	<0.01	<0.01	<0.01	<0.01		<0.01	<0.01*			
	11/04/15	8270C		<0.01			<0.02		<0.01*		<0.01								<0.01	<0.01	<0.01	<0.01	<0.01	<0.01	<0.01		<0.01	<0.01*			
	08/21/15	8270C		<0.01			<0.02		<0.01*		<0.01								<0.01	<0.01	<0.01	<0.01	<0.01	<0.01	<0.01		<0.01	<0.01*			
	06/10/15	8270C		<0.01			<0.02		<0.01*		<0.01								<0.01	<0.01	<0.01	<0.01	<0.01	<0.01	<0.01		<0.01	<0.01*			
	03/11/15	8270C		<0.01			<0.02		<0.01*		<0.01								<0.02	<0.01	<0.01	<0.01	<0.01	<0.01	<0.01		<0.01	<0.01*			
	11/21/14	8270C		<0.01			<0.02		<0.01*		<0.01								<0.02	<0.01	<0.01	<0.01	<0.01	<0.01	<0.01		<0.01	<0.01*			
	11/21/14	8270C		<0.01			<0.02		<0.01*		<0.01								<0.01	<0.01	<0.01	<0.01	<0.02	<0.01	<0.01		<0.01	<0.01*			
MKTF-41	10/23/19	8270D		<0.0005			<0.0005		<0.0005		<0.0005		0.00398	<0.0005				<0.0005	<0.0005	<0.0005	0.00047	0.00044	<0.0005	<0.0005	0.0004		<0.0005	<0.0005			
	08/22/19	8270C		<0.01			<0.02		<0.01*		<0.01			<0.01				<0.01	<0.01	<0.01	<0.01	<0.01	<0.01	<0.01	<0.01		<0.01	<0.01*			
	05/07/19	8270C		<0.01			<0.02		<0.01*		<0.01			<0.01				<0.01	<0.01	<0.01	<0.01	<0.01	<0.01	<0.01	<0.01		<0.01	<0.01*			
	02/13/19	8270C		<0.01			0.0083		<0.01*		<0.01			<0.01				<0.01	<0.01	<0.01	<0.01	<0.01	<0.01	<0.01	<0.01		<0.01	<0.01*			
	11/15/18	8270C		<0.01			<0.02		<0.01*		<0.01			<0.01				<0.01	<0.01	<0.01	<0.01	<0.01	<0.01	<0.01	<0.01		<0.01	<0.01*			
	08/29/18	8270C		<0.01			0.0066		<0.01*		<0.01			<0.01				<0.01	<0.01	<0.01	<0.01	<0.01	<0.01	<0.01	<0.01		<0.01	<0.01*			
	05/09/18	8270C		<0.01			0.016		<0.01*		<0.01			<0.01				<0.01	<0.01	<0.01	<0.01	<0.01	<0.01	<0.01	<0.01		<0.01	<0.01*			
	02/07/18	8270C		<0.01			0.0095		<0.01*		<0.01			<0.01				<0.01	<0.01	<0.01	<0.01	<0.01	<0.01	<0.01	<0.01		<0.01	<0.01*			
	11/27/17	8270C		<0.01			0.0047		<0.01*		<0.01			<0.01				<0.01	<0.01	<0.01	<0.01	<0.01	<0.01	<0.01	<0.01		<0.01	<0.01*			
	09/25/17	8270C		<0.01			<0.02		<0.01*		<0.01			<0.01				<0.01	<0.01	<0.01	<0.01	<0.01	<0.01	<0.01	<0.01		<0.01	<0.01*			
	06/06/17	8270C		<0.01			0.0088		0.0063		<0.01			<0.01				<0.01	<0.01	<0.01	<0.01	<0.01	<0.01	<0.01	<0.01		<0.01	<0.01*			
	03/07/17	8270C		<0.01			0.0082		0.0077		<0.01			0.0042				<0.01	<0.01	<0.01	<0.01	<0.01	<0.01	<0.01	<0.01		<0.01	<0.01*			
	10/31/16	8270C		<0.01			0.013		0.0065		<0.01			0.0067				<0.01	<0.01	<0.01	<0.01	<0.01	<0.01	<0.01	<0.01		<0.01	<0.01*			
	09/09/16	8270C		<0.01			0.0098		0.0031		<0.01			0.0035				0.003	<0.01	<0.1	<0.01	<0.01	<0.01	<0.01	<0.01		<0.01	<0.01*			
	06/09/16	8270C		<0.05			<0.1		0.024		<0.05			0.028					<0.05	<0.05	<0.05*	<0.05*	<0.05	<0.05	<0.05*		<0.05	<0.05*			
	02/24/16	8270C		<0.01			<0.02		<0.01*		<0.01								<0.01	<0.01	<0.01	<0.01	<0.01	<0.01	<0.01		<0.01	<0.01*			
	11/05/15	8270C		<0.01			<0.02		<0.01*		<0.01								<0.01	<0.01	<0.01	<0.01	<0.01	<0.01	<0.01		<0.01	<0.01*			
	08/21/15	8270C		<0.014			<0.029		<0.014*		<0.014								<0.014	<0.014	<0.014*	<0.014	<0.014	<0.014	<0.014		<0.014	<0.01*4			
	06/09/15	8270C		<0.01			<0.02		<0.01*		<0.01								<0.01	<0.01	<0.01	<0.01	<0.01	<0.01	<0.01		<0.01	<0.01*			
	03/12/15	8270C		<0.01			<0.02		<0.01*		<0.01								<0.01	<0.01	<0.01	<0.01	<0.01	<0.01	<0.01		<0.01	<0.01*			
	11/18/14	8270C		<0.01			<0.02		0.014		<0.01								<0.01	<0.01	<0.01	<0.01	<0.01	<0.01	<0.01		<0.01	<0.01*			
MKTF-42	10/23/19	8270D		<0.005			<0.005		<0.005		<0.005		<0.01*	<0.005				<0.005	<0.005	<0.005	0.00485	<0.005	<0.005	<0.005	0.00314		<0.005	<0.005*			
	08/22/19	8270C		<0.01			<0.02		<0.01*		<0.01			<0.01				<0.01	<0.01	<0.01	<0.01	<0.01	<0.01	<0.01	0.011		<0.01	<0.01*			
	05/07/19	8270C		<0.05			<0.1		<0.05*		<0.05			<0.05				<0.05	<0.05	<0.05	<0.05*	<0.05*	<0.05	<0.05	<0.05*		<0.05	<0.05*			
	02/03/19	8270C		<0.01			0.016		<0.01*		<0.01			<0.01				<0.01	<0.01	<0.01	0.041	0.048	<0.01	<0.01	<0.01		<0.01	<0.01*			
	11/15/18	8270C		<0.05			0.11		<0.05*		<0.05			<0.05				<0.05	<0.05	<0.05	0.29	0.13	<0.05	<0.05	0.16		<0.05	<0.05*			
	08/29/18	8270C		<0.1			0.094		<0.1*		<0.1			<0.1				<0.1	<0.1	<0.1	0.2	0.3	<0.1	<0.1	<0.1*		<0.1	<0.1*			
	05/09/18	8270C		<0.05			0.069		<0.05*		<0.05			<0.05				<0.05	<0.05	<0.05	0.34	<0.05*	<0.05	<0.05	<0.05*		<0.05	<0.05*			
	02/07/18	8270C		<0.01			<0.02		<0.01*		<0.01			<0.01				<0.01	<0.01	<0.01	<0.01	<0.01	<0.01	<0.01	<0.01		<0.01	<0.01*			
	11/27/17	8270C		<0.05			0.052		<0.05*		<0.05			0.025				<0.05	<0.05	<0.05	<0.05*	<0.05*	<0.05	<0.05	0.034		<0.05	<0.05*			
	09/25/17	8270C		<0.2*			<0.4		<0.2*		<0.2			<0.2*				<0.2	<0.2	<0.2	0.27	<0.2*	<0.2	<0.2	<0.2*		<0.2*	<0.2*			
	06/06/17	8270C		<0.01			<0.02		<0.01*		<0.01			<0.01				<0.01	<0.01	<0.01	<0.01	0.0052	<0.01	<0.01	0.012		<0.01	<0.01*			
	03/07/17	8270C		<0.01			<0.02		0.0096		<0.01			0.0044				0.022	<0.01	<0.01	0.15	<0.010	<0.01	<0.01	0.014		<0.01	<0.01*			
	10/31/16	8270C		<0.1			0.056		0.033		<0.1			0.037					<0.05	<0.05	0.19	<0.05*	<0.05	<0.05	0.016		<0.05	<0.05*			
	09/09/16	8270C		<0.1			0.072		<0.1*		<0.1			<0.1					<0.1	<0.1	0.17	<0.1*	<0.1	<0.1	<0.1*		<0.1	<0.1*			
	06/09/16	8270C		<0.05			<0.1		0.021		<0.05								<0.05	<0.05	<0.05*	<0.05*	<0.05	<0.05	<0.05*		<0.05	<0.05*			
	02/24/16	8270C		<0.1			<0.2		<0.1*		<0.1								<0.1	<0.1	0.27	<0.1*	<0.1	<0.1	<0.1*		<0.1	<0.1*			
	11/05/15	8270C		<0.1			<0.2		<0.1*		<0.1								<0.1	<0.1	<0.1*	<0.1*	<0.1	<0.1	<0.1*		<0.1	<0.1*			
	08/21/15	8270C		<0.01			<0.02		<0.01*		<0.01								<0.01	<0.01	<0.01	<0.01	<0.01	<0.01	<0.01		<0.01	<0.01*			
	06/09/15	8270C		<0.01			<0.02		<0.01*		<0.01								<0.01	<0.01	<0.01	<0.01	<0.01	<0.01	<0.01		<0.01	<0.01*			
	03/11/15	8270C		<0.01			<0.02		<0.01*		<0.01								<0.01	<0.01	<0.01	<0.01	<0.01	<0.01	<0.01		<0.01	<0.01*			
	11/18/14	8270C		<0.01			<0.02		0.013		<0.01								<0.01	<0.01	0.072	<0.01	<0.02	<0.01	<0.01		<0.01	<0.01*			

8.17.4 MKTF WELLS

Semi-Volatile Organic Compound Analytical Result Summary

			PARAMETERS																												
STANDARDS			Acenaphthene (mg/L)	Aniline (mg/L)	Anthracene (mg/L)	Benz(a) anthracene (mg/L)	Benzoic Acid (mg/L)	Benzyl alcohol (mg/L)	Bis(2-ethylhexyl) phthalate (mg/L)	Butyl benzyl phthalate (mg/L)	Carbazole (mg/L)	Chrysene (mg/L)	1,4-Dioxane (mg/L)	Di-n-octyl phthalate (mg/L)	Dibenzo furan (mg/L)	1,4-Dichloro benzene (mg/L)	Diethyl phthalate (mg/L)	Dimethyl phthalate (mg/L)	2,4-Dimethyl phenol (mg/L)	Fluorene (mg/L)	1-Methyl naphthalene (mg/L)	2-Methyl naphthalene (mg/L)	2-Methyl phenol (mg/L)	3+4-Methyl phenol (mg/L)	Naphthalene (mg/L)	Pentachloro phenol (mg/L)	Phenanthrene (mg/L)	Phenol (mg/L)	Pyrene (mg/L)	Pyridine (mg/L)	2,4,6-Trichlorophenol (mg/L)
WQCC 20 NMAC 6.2.3103 (DEC 2018)			NE	NE	NE	NE	NE	NE	NE	NE	NE	NE	NE	NE	NE	NE	NE	NE	NE	NE	NE	NE	NE	NE	**0.03**	**0.001**	NE	**0.005**	NE	NE	NE
40 CFR 141.61 MCL			NE	NE	NE	NE	NE	NE	**0.006**	NE	NE	NE	NE	NE	NE	**0.075**	NE	NE	NE	NE	NE	NE	NE	NE	NE	0.001	NE	NE	NE	NE	NE
NMED Tap Water (JUNE 2019)			**0.535**	NE	**1.72**	**0.00012**	NE	NE	0.0556	NE	NE	**0.0343**	**0.0046**	NE	NE	0.302	**14.8**	**0.612**	**0.354**	**0.288**	**0.0114**	**0.035**	NE	NE	0.00165	0.0004	**0.17**	5.76	**0.117**	NE	**0.0119**
EPA RSL for Tap Water (NOVEMBER 2019)			0.53	**0.13**	1.8	0.00003	**75**	**2**	0.056	**0.16**	NE	0.025	0.00046	**0.2**	**0.0079**	0.00048	15	NE	0.36	0.29	0.0011	0.036	**0.93**	**0.93**	0.00017	0.000041	NE	5.8	0.12	**0.02**	0.0041
Well ID	DATE SAMPLED	METHOD																													
MKTF-43	10/24/19	8270D		<0.01		*<0.01**	<0.0005		*<0.01**	<0.01	<0.01		<0.001	<0.01				<0.01	<0.01	<0.01	<0.01	<0.01	<0.01	<0.01	<0.01		<0.01	*<0.01**			
	08/22/19	8270C	SAMPLE BOTTLE BROKEN DURING EXTRACTION AT LAB - NO ANALYSES																												
	05/08/19	8270C		<0.01		*<0.01**	<0.02		*<0.01**	<0.01	<0.01			<0.01				<0.01	<0.01	<0.01	<0.01	<0.01	<0.01	<0.01	<0.01		<0.01	*<0.01**			
	02/13/19	8270C		<0.01		*<0.01**	0.0085		*<0.01**	<0.01	<0.01			<0.01				<0.01	<0.01	<0.01	<0.01	<0.01	<0.01	<0.01	<0.01		<0.01	*<0.01**			
	11/15/18	8270C		<0.01		*<0.01**	<0.02		*<0.01**	<0.01	<0.01			<0.01				<0.01	<0.01	<0.01	<0.01	<0.01	<0.01	<0.01	<0.01		<0.01	*<0.01**			
	08/30/18	8270C		<0.01		*<0.01**	0.0064		*<0.01**	<0.01	<0.01			<0.01				<0.01	<0.01	<0.01	<0.01	<0.01	<0.01	<0.01	<0.01		<0.01	*<0.01**			
	05/09/18	8270C		<0.01		*<0.01**	0.01		*<0.01**	<0.01	<0.01			<0.01				<0.01	<0.01	<0.01	<0.01	<0.01	<0.01	<0.01	<0.01		<0.01	*<0.01**			
	02/07/18	8270C		<0.01		**0.0041**	0.0072		*<0.01**	<0.01	<0.01			<0.01				<0.01	<0.01	<0.01	<0.01	<0.01	<0.01	<0.01	<0.01		<0.01	*<0.01**			
	11/27/17	8270C		<0.01		*<0.01**	0.0086		*<0.01**	<0.01	<0.01			<0.01				<0.01	<0.01	<0.01	<0.01	<0.01	<0.01	<0.01	<0.01		<0.01	*<0.01**			
	09/25/17	8270C		<0.01		*<0.01**	<0.02		*<0.01**	<0.01	<0.01			<0.01				<0.01	<0.01	<0.01	<0.01	<0.01	<0.01	<0.01	<0.01		<0.01	*<0.01**			
	06/06/17	8270C		<0.01		*<0.01**	0.011		**0.0091**	<0.01	<0.01			0.005				<0.01	<0.01	<0.01	<0.01	<0.01	<0.01	<0.01	<0.01		<0.01	*<0.01**			
	03/08/17	8270C		<0.01		*<0.01**	0.0063		**0.0071**	<0.01	<0.01			0.0034				<0.01	<0.01	<0.01	<0.01	<0.01	<0.01	<0.01	<0.01		<0.01	*<0.01**			
	10/31/16	8270C		<0.01			0.0083		**0.0063**	0.0028	<0.01			0.0083				<0.01	<0.01	<0.01	<0.01	<0.01	<0.01	<0.01	<0.01		<0.01	*<0.01**			
	09/09/16	8270C		<0.01			0.017		0.0041		<0.01			0.0034				0.003	<0.01	<0.01	<0.01	<0.01	<0.01	<0.01	<0.01		<0.01	*<0.01**			
	06/09/16	8270C		<0.01			<0.02		0.004		<0.01			0.0056				0.003	<0.01	<0.01	<0.01	<0.01	<0.01	<0.01	<0.01		<0.01	*<0.01**			
	02/24/16	8270C		<0.01			<0.02		*<0.01**		<0.01								<0.01	<0.01	<0.01	<0.01	<0.01	<0.01	<0.01		<0.01	*<0.01**			
	11/05/15	8270C		<0.01			<0.02		*<0.01**		<0.01								<0.01	<0.01	<0.01	<0.01	<0.01	<0.01	<0.01		<0.01	*<0.01**			
	08/21/15	8270C		<0.01			<0.025		*<0.01**		<0.01								<0.012	<0.01	<0.01	<0.01	<0.012	<0.012	<0.01		<0.01	*<0.01*2*			
	06/10/15	8270C		<0.012			<0.024		*<0.012**		<0.012								<0.012	<0.012	*<0.012**	<0.012	<0.012	<0.012	*<0.12**		<0.12	*<0.01*2*			
	03/11/15	8270C		<0.01			<0.02		*<0.01**		<0.01								<0.01	<0.01	<0.01	<0.01	<0.01	<0.01	<0.01		<0.01	*<0.01**			
	11/18/14	8270C		<0.01			<0.02		*<0.01**		<0.01								<0.01	<0.01	<0.01	<0.01	<0.02	<0.01	<0.01		<0.01	*<0.01**			
MKTF-44	10/24/19	8270D		<0.0005			<0.0005		<0.0005	<0.0005	<0.0005		<0.001	<0.0005				<0.0005	<0.0005	<0.0005	<0.0005	<0.0005	<0.0005	<0.0005	<0.0005		<0.0005	<0.0005			
	08/22/19	8270C		<0.01			<0.02		*<0.01**	<0.01	<0.01			<0.01				<0.01	<0.01	<0.01	<0.01	<0.01	<0.01	<0.01	<0.01		<0.01	*<0.01**			
	05/08/19	8270C		<0.01			<0.02		*<0.01**	<0.01	<0.01			<0.01				<0.01	<0.01	<0.01	<0.01	<0.01	<0.01	<0.01	<0.01		<0.01	*<0.01**			
	02/13/19	8270C		<0.01			0.00667		*<0.01**	<0.01	<0.01			<0.01				<0.01	<0.01	<0.01	<0.01	<0.01	<0.01	<0.01	<0.01		<0.01	*<0.01**			
	11/28/18	8270C		<0.05			<0.1		*<0.05**	<0.05	<0.05			<0.05				<0.05	<0.05	<0.05	*<0.05**	*<0.05**	<0.05	<0.05	*<0.05**		<0.05	*<0.05**			
	08/30/18	8270C		<0.01			<0.02		*<0.01**	<0.01	<0.01			<0.01				<0.01	<0.01	<0.01	<0.01	<0.01	<0.01	<0.01	<0.01		<0.01	*<0.01**			
	05/10/18	8270C		<0.01			<0.02		*<0.01**	<0.01	<0.01			<0.01				<0.01	<0.01	<0.01	<0.01	<0.01	<0.01	<0.01	<0.01		<0.01	*<0.01**			
	02/08/18	8270C		<0.01			0.012		*<0.01**	<0.01	<0.01			<0.01				<0.01	<0.01	<0.01	<0.01	<0.01	<0.01	<0.01	<0.01		<0.01	*<0.01**			
	11/28/17	8270C		<0.01			0.011		*<0.01**	<0.01	<0.01			<0.01				<0.01	<0.01	<0.01	<0.01	<0.01	<0.01	<0.01	<0.01		<0.01	*<0.01**			
	09/25/17	8270C		<0.01			<0.02		**0.024**	<0.01	<0.01			<0.01				<0.01	<0.01	<0.01	<0.01	<0.01	<0.01	<0.01	<0.01		<0.01	*<0.01**			
	06/05/17	8270C		<0.01			0.007		**0.0067**	<0.01	<0.01			0.0047				<0.01	<0.01	<0.01	<0.01	<0.01	<0.01	<0.01	<0.01		<0.01	*<0.01**			
	03/08/17	8270C		<0.01			0.0062		**0.008**	<0.01	<0.01			0.0036				<0.01	<0.01	<0.01	<0.01	<0.01	<0.01	<0.01	<0.01		<0.01	*<0.01**			
	11/01/16	8270C		<0.01			0.11		**0.066**	0.027	<0.01			0.075				<0.1	<0.01	<0.01	<0.01	<0.01	<0.01	<0.01	<0.01		<0.01	*<0.01**			
	09/09/16	8270C		<0.01			0.0065		0.0035		<0.01			<0.01				0.003	<0.01	<0.01	<0.01	<0.01	<0.01	<0.01	<0.01		<0.01	*<0.01**			
	06/09/16	8270C		<0.01			<0.02		*<0.01**		<0.01			0.0051					<0.01	<0.01	<0.01	<0.01	<0.01	<0.01	<0.01		<0.01	*<0.01**			
	02/24/16	8270C		<0.01			<0.02		*<0.01**		<0.01								<0.01	<0.01	<0.01	<0.01	<0.01	<0.01	<0.01		<0.01	*<0.01**			
	11/09/15	8270C		<0.01			<0.02		*<0.01**		<0.01								<0.01	<0.01	<0.01	<0.01	<0.01	<0.01	<0.01		<0.01	*<0.01**			
	08/17/15	8270C		<0.01			<0.02		*<0.01**		<0.01								<0.01	<0.01	<0.01	<0.01	<0.01	<0.01	<0.01		<0.01	*<0.01**			
	06/10/15	8270C		<0.01			<0.02		*<0.01**		<0.01								<0.01	<0.01	<0.01	<0.01	<0.01	<0.01	<0.01		<0.01	*<0.01**			
	03/12/15	8270C		<0.01			<0.02		*<0.01**		<0.01								<0.01	<0.01	<0.01	<0.01	<0.02	<0.01	<0.01		<0.01	*<0.01**			
	11/21/14	8270C		<0.01			<0.02		*<0.01**		<0.01								<0.01	<0.01	<0.01	<0.01	<0.02	<0.01	<0.01		<0.01	*<0.01**			
MKTF-45			SPH Detected - No samples were collected.																												
MKTF-46	12/03/19	8270D	<0.0005	<0.0005	<0.0005	<0.0001	<0.0005	<0.0005	<0.0005	<0.0005	<0.0005	<0.0005	0.00117	<0.0005	<0.0005	<0.0005	<0.0005	<0.0005	<0.0005	<0.0005	<0.0005	<0.0005	<0.0005	<0.0005	<0.0005	<0.0005	<0.0005	<0.0005	<0.0005	<0.0005	<0.0005
MKTF-47	12/03/19	8270D	<0.0005	<0.0005	<0.0005	<0.0001	<0.0005	<0.0005	<0.0005	<0.0005	<0.0005	<0.0005	0.00191	<0.0005	<0.0005	<0.0005	<0.0005	<0.0005	<0.0005	<0.0005	<0.0005	<0.0005	<0.0005	<0.0005	<0.0005	<0.0005	<0.0005	<0.0005	<0.0005	<0.0005	<0.0005
MKTF-48	12/03/19	8270D	0.00195	<0.0005	<0.0005	<0.0001	<0.0005	<0.0005	<0.0005	<0.0005	<0.0005	<0.0005	0.0013	<0.0005	0.00176	<0.0005	<0.0005	<0.0005	<0.0005	0.00228	**0.0394**	0.0299	<0.0005	<0.0005	0.0211	<0.0005	0.00393	0.00186	<0.0005	<0.0005	<0.0005
MKTF-49	12/03/19	8270D	0.00144	<0.0005	<0.0005	<0.0001	<0.0025	<0.0005	<0.0005	<0.0005	0.00155	<0.0005	0.00134	<0.0005	0.00125	<0.0005	<0.0005	<0.0005	<0.0005	0.00313	**0.0532**	**0.0671**	<0.0005	<0.0005	**0.134**	<0.0005	0.00566	**0.0479**	<0.0005	<0.0005	<0.0005
MKTF-50	12/03/19	8270D	<0.0025	<0.0025	<0.0025	*<0.0005**	0.163	<0.0025	0.00102	<0.0025	<0.0025	<0.0025	*<0.005**	<0.0025	<0.0025	<0.0025	<0.0025	<0.0025	<0.0025	<0.0025	0.00705	0.00902	0.0191	0.0265	**0.0501**	*<0.0025**	<0.0025	**0.124**	<0.0025	<0.0025	<0.0025

DEFINITIONS

NE = Not established

NA = Not analyzed

Bold and highlighted values represent values above the applicable standards

STANDARDS

WQCC 20 NMAC 6.2.3103 - Standards for Ground Water of 10,000 mg/l TDS Concentration or Less.

a) Human Health Standards; b) Other Standards for Domestic Water

40 CFR 141.62 Detection Limits for Inorganic Contaminants

EPA Regional Screening Level (RSL) Summary Table

NMED Risk Assessment Guidance for Investigations and Remediations Table A-1

NOTES

Wells marked in red were not sampled because of SPH, well was dry, or well was inaccessible.

Items notes with a * and italics have a detection limit greater than or equal to the applicable standard.

8.17.5 MKTF WELLS

Volatile Organic Compounds Analytical Results

			PARAMETERS																																			
STANDARDS			1,2,4-Trimethylbenzene (mg/L)	1,3,5-Trimethylbenzene (mg/L)	1,2-Dichloroethane (EDC) (mg/L)	1,2-Dibromoethane (EDB) (mg/L)	Naphthalene (mg/L)	1-Methylnaphthalene (mg/L)	2-Methylnaphthalene (mg/L)	Acetone (mg/L)	Bromomethane (mg/L)	(Methyl ethyl ketone) 2-Butanone (mg/L)	Chlorobenzene (mg/L)	Chloroethane (mg/L)	Chloroform (mg/L)	Chloromethane (mg/L)	cis-1,2-DCE (mg/L)	1,2-Dichlorobenzene (mg/L)	1,4-Dichlorobenzene (mg/L)	1,1-Dichloroethane (mg/L)	1,1-Dichloroethene (mg/L)	1,2-Dichloropropane (mg/L)	2-Hexanone (mg/L)	Isopropylbenzene (mg/L)	4-Isopropyltoluene (mg/L)	4-Methyl-2-pentanone (mg/L)	Methylene Chloride (mg/L)	n-Butylbenzene (mg/L)	n-Propylbenzene (mg/L)	sec-Butylbenzene (mg/L)	Styrene (mg/L)	tert-Butylbenzene (mg/L)	Tetrachloroethene (PCE) (mg/L)	1,2,4-Trichlorobenzene (mg/L)	1,1,1-Trichloroethane (mg/L)	1,1,2-Trichloroethane (mg/L)	Trichloroethene (TCE) (mg/L)	Vinyl Chloride (mg/L)
WQCC 20 NMAC 6.2.3103 (DEC 2018)			NE	NE	0.005	0.00005	0.03	NE	NE	NE	NE	NE	NE	NE	0.1	NE	0.07	0.6	0.075	0.025	0.007	0.005	NE	NE	NE	NE	0.005	NE	NE	NE	0.1	NE	0.005	0.07	0.2	0.005	0.005	0.002
40 CFR 141.61 MCL			NE	NE	0.005	0.00005	NE	NE	NE	NE	NE	NE	NE	NE	NE	NE	0.07	NE	0.075	NE	0.007	0.005	NE	NE	NE	NE	0.005	NE	NE	NE	0.1	NE	0.005	0.07	0.2	0.005	0.005	0.002
NMED Tap Water (JUNE 2019)			NE	NE	0.0017	0.0000747	0.00165	0.0114	0.035	14.06	0.0075	5.56	0.0776	20.86	0.00229	0.0203	0.0365	NE	0.0048	0.0275	0.284	0.00437	NE	0.447	NE	1.24	0.106	NE	NE	NE	1.21	NE	NE	0.00398	8	0.00042	0.00259	0.00032
EPA RSL for Tap Water (NOVEMBER 2019)			0.056	0.06	0.00017	0.0000075	0.00017	0.0011	0.036	14	0.0075	5.6	0.078	21	0.00022	0.19	0.036	0.3	0.00048	0.0028	0.28	0.00085	0.038	NE	NE	6.3	0.011	1	0.66	2	1.2	0.69	0.011	0.0012	8	0.00028	0.00049	0.000019
Well ID	**DATE SAMPLED**	**METHOD**																																				
MKTF-1	Second half 2016-2019	--	SPH Detected - No samples were collected.																																			
	09/07/16	8260B/8011/504.1/EDB	0.039	<0.01	0.0039	0.017	0.01	0.012	<0.04*	0.01		0.0036					0.015			0.048	0.019			0.012	<0.01	0.00098	<0.003	<0.03	0.025	0.0032	0.00059		0.00028		0.00061	<0.001	0.0025	0.0011
	02/24/16	8260B	0.66	0.03	0.0091	<0.05*	0.11	0.067	0.035	0.16		<0.5					0.026			0.06	0.025			0.046	<0.05		0.016	0.022	0.16	0.0082	<0.5*		<0.05*		<0.05	<0.05*	<0.05*	0.022
	11/04/15	8260B	0.71	0.054	<0.005*		0.091	0.062	0.032	<0.05		<0.05					0.037			0.074	0.046			0.047	<0.005			<0.015	0.1	0.0084			<0.005*		<0.005	<0.005*	<0.005*	0.012
	08/21/15	8260B	0.65	0.057	<0.005*		0.081	0.044	<0.02	<0.05		<0.05					0.042			0.065	0.051			0.045	<0.005			0.019	0.13	0.011			<0.005*		<0.005	<0.005*	<0.005*	<0.005*
	06/09/15	8260B	0.67	0.13	<0.05*		<0.1*	<0.2*	<0.2*	<0.5		<0.5					<0.05			0.056	<0.05*			<0.05	<0.05			<0.15	0.11	<0.05			<0.05*		<0.05	<0.05*	<0.05*	<0.05*
	03/11/15	8260B	0.59	0.1	<0.05*		<0.1*	<0.2*	<0.2*	<0.5		<0.5					<0.05			0.066	0.058			<0.05	<0.05			<0.15	0.11	<0.05			<0.05*		<0.05	<0.05*	<0.05*	<0.05*
	06/06/14	8260B	1.1	0.27	<0.05*		0.3	<0.2*	<0.2*	<0.5		<0.5					<0.05			0.094	<0.05*			<0.05	<0.05			<0.15	0.14	<0.05			<0.05*		<0.05	<0.05*	<0.05*	<0.05*
MKTF-2	11/19/19	8260B/8011/504.1	0.0086	<0.005	0.0047	0.016	<0.010	0.0069	<0.020	<0.050		<0.050		<0.010			0.0031		<0.005	0.015	0.0014		<0.05*	0.0044	<0.005	<0.050	<0.015*	<0.015	0.0078	<0.005	<0.005		<0.005*		<0.005	<0.005*	<0.005*	0.017
	08/23/19	8260B/8011/504.1	0.018	<0.02	0.012	0.000015	<0.04*	0.012	<0.08*	<0.2		<0.2		<0.04			<0.02		<0.02	0.027	<0.02*		<0.2*	0.011	<0.02	<0.2	<0.06*	<0.06	0.027	<0.02	<0.02		<0.02*		<0.02	<0.02*	<0.02*	0.028
	05/06/19	8260B/8011/504.1	0.13	<0.02	0.0064	0.000013	0.012	0.016	<0.08*	<0.2		<0.2		<0.04			<0.02		<0.02	0.019	0.0064		<0.2*	<0.02	<0.02	<0.2	<0.06*	<0.06	0.011	<0.02	<0.02		<0.02*		<0.02	<0.02*	<0.02*	0.019
	03/28/19	8260B/8011/504.1	0.13	0.24	0.0069	0.0000086	0.0095	0.0093	<0.08*	<0.2		<0.2		<0.04			<0.02		<0.02	0.016	0.0073		<0.2*	<0.02	<0.02	<0.2	<0.06*	<0.06	<0.02	<0.02	<0.02		<0.02*		<0.02	<0.02*	<0.02*	0.013
	11/28/18	8260B/8011/504.1	0.46	0.022	<0.01*	<0.0000095	0.042	0.025	0.0045	<0.1		<0.1		0.0099			0.0086		<0.01	0.044	0.007		<0.1*	0.027	0.0029	<0.1	<0.03*	0.0095	0.096	0.0059	<0.01		<0.01*		<0.01	<0.01*	<0.01*	0.028
	08/20/18	8260B/8011/504.1	0.06	<0.01	0.0078	0.0000053	0.0055	0.0034	<0.04*	<0.1		<0.1					0.0099		<0.01	0.042	0.024		<0.1*	0.0074	<0.01	<0.1	<0.03*	<0.03	0.018	<0.01	<0.01		<0.01*		<0.01	<0.01*	<0.01*	0.0071
	05/01/18	8260B	0.2	0.0092	0.0048	<0.01*	0.023	0.016	<0.04*	<0.1		<0.1					0.016		<0.01	0.033	0.011		<0.1*	0.015	0.0011	<0.1	<0.03*	0.0041	0.045	0.0024	<0.01		<0.01*		<0.01	0.0016	0.0018	0.0063
	02/06/18	8260B/8011/504.1	0.18	0.005	<0.005*	0.015	0.022	0.02	0.0028	<0.05		<0.05					0.014		<0.005	0.041	0.018		<0.05*	0.014	0.0014	<0.05	<0.015*	0.0038	0.038	0.0022	<0.005		<0.005*		<0.005	<0.005*	0.003	0.0037
	11/20/17	8260B	0.2	0.003	0.0033	<0.005*	0.027	0.031	0.0015	0.0074		<0.05					0.016		<0.005	0.047	0.021		<0.05*	0.021	0.0011	<0.05	<0.015*	0.0049	0.059	0.0027	<0.005		<0.005*		<0.005	0.00095	0.0024	0.0039
	10/03/17	8260B	0.053	<0.005	0.0035	<0.005*	0.0067	0.0095	<0.02	<0.05		<0.05					0.017		<0.005	0.045	0.021		<0.05*	0.017	0.00088	<0.05	0.0018	0.0045	0.047	0.0021	<0.005		<0.005*		<0.005	<0.005*	0.0019	0.0051
	03/16/17	8260B/8011/504.1	0.36	0.024	<0.01*	<0.01*	0.044	0.031	0.0058	0.016		<0.1					0.024		<0.01	0.062	0.026		<0.1*	0.033	0.0026	<0.1	<0.03*	0.0091	0.096	0.0052	<0.01		<0.01*		<0.01	<0.01*	0.0042	0.0051
	10/28/16	8260B/8011/504.1	0.02	<0.01	0.0072	0.000044	0.0016	0.0045	<0.04*	<0.1		<0.1					0.017			0.062	0.037		<0.1*	0.0062	<0.01	<0.01	<0.03*	<0.03	0.012	0.0018	<0.01		<0.01*		0.001	<0.01*	0.0035	<0.01*
	09/07/16	8260B	0.039	<0.01	0.0039	<0.001*	0.01	0.012	<0.04*	0.01		0.0036					0.015			0.048	0.019		<0.1*	0.012	<0.01	0.00098	<0.003	<0.03	0.025	0.0032	0.00059		0.00028		0.00061	<0.001	0.0025	0.0011
	06/10/16	8260B	0.13	0.0097	<0.005*		0.025	0.015	0.0028	<0.05		<0.05					0.012			0.046	0.018		<0.05*	0.013	0.0016		<0.015*	0.0049	0.037	0.0024			<0.005*		<0.005	<0.005*	0.0029	<0.005*
	02/24/16	8260B	0.0013	<0.005	0.015		<0.01	<0.02*	<0.02	0.0046		<0.05					0.0058			0.058	0.11		0.0018	0.004	<0.005		0.0017	<0.015	<0.005	<0.005			<0.005*		0.0017	0.0019	0.0073	0.0016
	11/04/15	8260B	0.0087	<0.001	0.0048		0.0024	0.0042	<0.004	<0.01		<0.01					0.013			0.066	0.03			0.0097	<0.001			<0.003	0.013	0.0016			<0.001		0.0019	<0.001	0.0035	0.0019
	08/21/15	8260B	0.0017	<0.001	0.0091		0.0036	<0.004	<0.004	<0.01		<0.01					0.01			0.062	0.059			0.0072	<0.001			<0.003	0.0056	0.0013			<0.001		<0.001	0.0012	0.0053	0.0013
	06/09/15	8260B	0.04	<0.001	0.0041		0.0066	0.0058	<0.004	<0.01		<0.01					0.0099			0.054	0.026			0.0097	<0.001			0.0032	0.029	0.0017			<0.001		<0.001	<0.001	0.0025	0.0014
	03/11/15	8260B	0.0051	<0.002	0.0045		<0.004	<0.008	<0.008	<0.02		<0.02					0.0093			0.05	0.031			<0.002	<0.002			<0.006	<0.002	<0.002			<0.002		0.0023	<0.002	0.0024	<0.002*
	11/14/14	8260B	0.0021	<0.001	0.016		<0.002	<0.004	<0.004	<0.01		<0.01					0.011			0.075	0.078			0.0016	<0.001			<0.003	0.0012	<0.001			<0.001		0.0036	0.0024	0.0071	0.0097
	09/18/14	8260B	0.14	<0.005	0.0051		0.017	0.037	<0.02	<0.05		<0.05					0.03			0.098	0.024			0.03	<0.005			<0.015	0.13	0.0068			<0.005*		<0.005	<0.005*	<0.005*	<0.005*
	06/06/14	8260B	0.031	0.0019	0.0081		0.0049	<0.004	<0.004	0.012		<0.01					0.011			0.07	0.041			0.0031	<0.001			<0.003	0.009	<0.001			<0.001		0.0035	0.0012	0.0041	0.001
	04/08/14	8260B	0.0035	<0.002	0.0068		<0.004	<0.008	<0.008	<0.02		<0.02					0.0052			0.041	0.034			<0.002	<0.002			<0.006	<0.002	<0.002			<0.002		0.0022	<0.002	0.0034	<0.002*
MKTF-3		--	SPH Detected - No samples were collected.																																			
MKTF-4	10/30/19	8260B/8011/504.1	0.41	0.079	<0.005*	<0.0000093	0.34	0.2	0.18	<0.05		<0.05			<0.005		<0.005			0.0055	0.0073		<0.05*	0.028	0.0038			<0.015	0.061	0.0045	<0.005	<0.005	<0.005*		<0.005	<0.005*	<0.005*	<0.005*
	08/21/19	8260B/8011/504.1	0.25	0.057	0.0015	<0.0000093	0.22	0.15	0.11	<0.01		<0.01			<0.001		0.0091			0.013	0.017		<0.01	0.02	0.0035			<0.003	0.049	0.004	0.00045	<0.001	<0.001		<0.001	<0.001	0.00083	<0.001
	05/13/19	8260B/8011/504.1	0.41	0.083	0.0016	<0.0000093	0.32	0.21	0.2	<0.05		<0.05			<0.01		<0.005			0.0054	0.0075		<0.05*	0.026	0.004			<0.015	0.054	0.0041	<0.005	<0.005	<0.005*		<0.005	<0.005*	0.00087	<0.005*
	03/26/19	8260B/8011/504.1	0.44	0.093	0.0019	<0.0000093	0.36	0.19	0.17	<0.05		<0.05			<0.005		<0.005			0.0047	0.0068		<0.05*	0.022	0.0044			<0.015	0.046	0.0033	<0.005	<0.005	<0.005*		<0.005	<0.005*	<0.005*	<0.005*
	11/20/18	8260B/8011/504.1	0.46	0.073	<0.002	<0.0000094	0.32	0.18	0.17	0.02		<0.02			0.00044		0.0071			0.011	0.017		<0.02	0.02	0.0039			0.0061	0.049	0.0037	0.00096	<0.02	<0.02*		<0.002	<0.002	0.0015	<0.002*
	09/04/18	8260B/8011/504.1	0.48	0.093	0.0043	<0.0000094	0.36	0.19	0.2	0.049		<0.1					0.008			0.0074	0.0077		<0.1*	0.027	0.004			0.011	0.068	0.0048	<0.01	<0.01	<0.01*		<0.01	<0.01*	<0.01*	<0.01*
	05/02/18	8260B	0.52	0.086	<0.01*	<0.01*	0.32	0.19	0.17	<0.1		<0.1					0.0095			0.014	0.02		<0.1*	0.027	0.0048			0.0078	0.058	0.0047	<0.01	<0.01	<0.01*		<0.01	<0.01*	0.0017	<0.01*
	02/14/18	8260B	0.42	0.068	<0.01*	<0.01*	0.26	0.14	0.12	<0.1		<0.1					0.011			0.0084	0.012		<0.1*	0.023	0.0039			0.0093	0.048	0.0028	<0.01	<0.01	<0.01*		<0.01	<0.01*	<0.01*	<0.01*
	11/28/17	8260B	0.58	0.11	<0.005*	<0.005*	0.42	0.25	0.26	0.016		<0.05					0.0061			0.0057	0.0087		<0.05*	0.029	0.0055			0.01	0.073	0.006	0.0017	0.00072	<0.005*		<0.005	<0.005*	0.0022	<0.005*
	09/26/17	8260B	0.57	0.11	<0.005*	<0.005*	0.45	0.26	0.26	<0.05		<0.05					0.0052			0.0034	0.0058		<0.05*	0.03	0.005			0.01	0.077	0.0058	0.0014	<0.005	<0.005*		<0.005	<0.005*	0.0013	<0.005*
	06/08/17	8260B	0.47	0.08	<0.005*	<0.005*	0.33	0.18	0.15	0.023		<0.05					0.0059			0.0063	0.013		<0.05*	0.019	0.0041			0.0062	0.041	0.0036	0.0013	<0.005	<0.005*		<0.005	<0.005*	0.0014	<0.005*
	03/02/17	8260B	0.49	0.088	0.0025	<0.005*	0.37	0.2	0.2	<0.05		<0.05					0.0048			0.0046	0.0075		<0.05*	0.023	0.0037			0.0059	0.06	0.0052	0.00086	<0.005	<0.005*		<0.005	<0.005*	<0.005*	<0.005*
	11/02/16	8260B	0.37	0.063	0.0023	<0.005*	0.3	0.19	0.16	<0.05		<0.05					0.0055			0.01	0.014		<0.05*	0.024	0.0037			0.0061	0.043	0.0045	0.0015		<0.01*		<0.005	<0.005*	<0.005*	<0.005*
	09/11/16	8260B	0.43	0.069	0.0026	<0.005*	0.39	0.22	0.22	<0.05		<0.05					0.01			0.0062	0.012		0.024	0.0033	<0.05			0.0055	0.054	0.0038	0.00058		<0.005*		<0.005	<0.005*	<0.005*	<0.005*
	06/09/16	8260B	0.37	0.057	<0.01*		0.28	0.17	0.14	<0.1		<0.1					0.0077			0.012	0.021			0.021	0.0043			0.0087	0.045	0.0046	<0.01		<0.01*		<0.01	<0.01*	<0.01*	<0.01*
	02/29/16	8260B	0.37	0.058	0.0016		0.34	0.18	0.18	0.027		0.011					0.0055			0.0059	0.014			0.025	0.0038			0.0064	0.052	0.0041	0.0067		<0.005*		<0.005	<0.005*	<0.005*	<0.005*
	11/03/15	8260B	0.43	0.053	<0.01*		0.34	0.21	0.18	<0.1		<0.1					<0.01			<0.01	0.02			0.033	<0.01			<0.03	0.067	<0.01			<0.01*		<0.01	<0.01*	<0.01*	<0.01*
	08/18/15	8260B	0.27	0.026	<0.005*		0.24	0.14	0.085	<0.05		<0.05					0.013			0.0075	0.016			0.016	<0.005			<0.015	0.021	<0.005			<0.005*		<0.005	<0.005*	<0.005*	<0.005*
	06/04/15	8260B	0.27	0.023	<0.01*		0.22	0.14	0.086	<0.1		<0.1					<0.01			<0.01	0.022			0.021	<0.01			<0.03	0.037	<0.01			<0.01*		<0.01	<0.01*	<0.01*	<0.01*
	03/16/15	8260B	0.2	0.024	<0.01*		0.17	0.096	0.089	<0.1		<0.1					<0.1*			0.019	0.032			0.01	<0.01			<0.03	0.021	<0.01			<0.01*		<0.01	<0.01*	<0.01*	<0.01*
	11/13/14	8260B	0.2	0.019	<0.01*		0.13	0.095	0.08	<0.1		<0.1					0.014			0.037	0.059			0.016	<0.1			<0.03	0.029	<0.01			<0.01*		<0.01	<0.01*	<0.01*	<0.01*
	09/15/14	8260B	0.096	0.012	<0.005*		0.092	0.041	0.033	<0.05		<0.05					0.014			0.037	0.074			0.011	<0.005			<0.015	0.019	<0.005			<0.005*		<0.005	<0.005*	0.0051	<0.005*
	06/04/14	8260B	0.27	0.049	<0.01*		0.31	0.13	0.17	<0.1		<0.1					<0.01			0.011	0.021			0.02	<0.01			<0.03	0.046	<0.01			<0.01*		<0.01	<0.01*	<0.01*	<0.01*
	04/11/14	8260B	0.51	0.094	<0.02*		0.43	0.18	0.28	<0.2		<0.2					<0.02			<0.02	0.028			0.028	<0.02			<0.06	0.077	<0.02			<0.02*		<0.02	<0.02*	<0.02*	<0.02*
MKTF-5		--	SPH Detected - No samples were collected.																																			
MKTF-6		--	SPH Detected - No samples were collected.																																			
MKTF-7		--	SPH Detected - No samples were collected.																																			
MKTF-8		--	SPH Detected - No samples were collected.																																			

8.17.5 MKTF WELLS
Volatile Organic Compounds Analytical Results

			PARAMETERS																																			
		STANDARDS	1,2,4-Trimethyl benzene (mg/L)	1,3,5-Trimethyl benzene (mg/L)	1,2-Dichloro ethane (EDC) (mg/L)	1,2-Dibro moethane (EDB) (mg/L)	Naphtha-lene (mg/L)	1-Methyl naphtha-lene (mg/L)	2-Methyl naphtha-lene (mg/L)	Acetone (mg/L)	Bromo methane (mg/L)	(Methyl ethyl ketone) 2-Butanone (mg/L)	Chloro benzene (mg/L)	Chloro-ethane (mg/L)	Chloro-form (mg/L)	Chloro-methane (mg/L)	cis-1,2-DCE (mg/L)	1,2-Dichloro benzene (mg/L)	1,4-Dichloro benzene (mg/L)	1,1-Dichloro ethane (mg/L)	1,1-Dichloro ethene (mg/L)	1,2-Dichloro propane (mg/L)	2-Hexanone (mg/L)	Isopropyl benzene (mg/L)	4-Isopropyl toluene (mg/L)	4-Methyl-2-pen-tanone (mg/L)	Methylene Chloride (mg/L)	n-Butyl benzene (mg/L)	n-Propyl benzene (mg/L)	sec-Butyl benzene (mg/L)	Styrene (mg/L)	tert-Butyl benzene (mg/L)	Tetra-chloro ethene (PCE) (mg/L)	1,2,4-Trichloro-benzene (mg/L)	1,1,1-Trichloro ethane (mg/L)	1,1,2-Trichloro ethane (mg/L)	Trichloro ethene (TCE) (mg/L)	Vinyl Chloride (mg/L)
		WQCC 20 NMAC 6.2.3103 (DEC 2018)	NE	NE	0.005	0.00005	0.03	NE	NE	NE	NE	NE	NE	NE	0.1	NE	0.07	0.6	0.075	0.025	0.007	0.005	NE	NE	NE	NE	0.005	NE	NE	NE	0.1	NE	0.005	0.07	0.2	0.005	0.005	0.002
		40 CFR 141.61 MCL	NE	NE	0.005	0.00005	NE	NE	NE	NE	NE	NE	NE	NE	NE	NE	0.07	NE	0.075	NE	0.007	0.005	NE	NE	NE	NE	0.005	NE	NE	NE	0.1	NE	0.005	0.07	0.2	0.005	0.005	0.002
		NMED Tap Water (JUNE 2019)	NE	NE	0.0017	0.0000747	0.00165	0.0114	0.035	14.06	0.0075	5.56	0.0776	20.86	0.00229	0.0203	0.0365	NE	0.0048	0.0275	0.284	0.00437	NE	0.447	NE	1.24	0.106	NE	NE	NE	1.21	NE	NE	0.00398	8	0.00042	0.00259	0.00032
		EPA RSL for Tap Water (NOVEMBER 2019)	0.056	0.06	0.00017	0.0000075	0.00017	0.0011	0.036	14	0.0075	5.6	0.078	21	0.00022	0.19	0.036	0.3	0.00048	0.0028	0.28	0.00085	0.038	NE	NE	6.3	0.011	1	0.66	2	1.2	0.69	0.011	0.0012	8	0.00028	0.00049	0.000019
Well ID	DATE SAMPLED	METHOD																																				
MKTF-9	11/18/19	8260B	0.088	<0.01	<0.01*	<0.01*	0.052	0.074	0.012	<0.1		<0.1					0.011			0.011	0.015		0.015	<0.01			0.0053	0.034	0.0036	<0.01		<0.01*		0.014	<0.01*	<0.01*	<0.01*
	08/23/19	8260B	0.11	<0.02	<0.02*	<0.02*	0.054	0.078	0.026	<0.2		<0.2					0.012			0.014	0.017		0.022	<0.02			0.025	0.046	0.0084	<0.02		<0.02*		0.011	<0.02*	<0.02*	<0.02*
	05/13/19	8260B	0.12	0.0021	<0.01*	<0.01*	0.082	0.12	0.016	<0.1		<0.1					<0.01			0.0068	0.0063		0.021	0.0024			0.0081	0.047	0.0047	<0.01		<0.01*		0.0059	<0.01*	<0.01*	<0.01*
	03/26/19	8260B	0.098	<0.02	<0.02*	<0.02*	0.068	0.083	0.019	<0.2		<0.2					0.02			0.0091	0.0091		0.013	<0.02			0.0047	0.029	<0.02	<0.02		<0.02*		0.0064	<0.02*	<0.02*	<0.02*
	11/28/18	8260B	0.11	<0.02	<0.02*	<0.02*	0.062	0.07	0.014	<0.2		<0.2					0.02			0.022	0.034		0.011	<0.02			<0.06	0.022	<0.02	<0.02		<0.02*		0.031	<0.02*	<0.02*	<0.02*
	09/04/18	8260B	0.099	<0.02	<0.02*	<0.02*	0.073	0.076	0.017	<0.2		<0.2					0.021			0.09	0.028		0.017	<0.02			0.0067	0.039	0.0043	<0.02		<0.02*		0.028	<0.02*	<0.02*	<0.02*
	05/02/18	8260B	0.095	<0.01	<0.01*	<0.01*	0.062	0.08	0.0099	<0.1		<0.1					0.023			0.026	0.036		0.019	0.0031			0.0087	0.037	0.005	<0.01		0.0028		0.033	<0.01*	0.0032	<0.01*
	02/14/18	8260B	0.086	0.0013	<0.01*	<0.01*	0.05	0.064	0.009	<0.1		<0.1					0.026			0.015	0.028		0.017	0.0024			0.0075	0.031	0.0043	<0.01		0.002		0.031	<0.01*	0.0029	<0.01*
	11/28/17	8260B	0.093	0.0028	<0.01*	<0.01*	0.057	0.08	0.016	<0.1		<0.1					0.017			0.019	0.03		0.017	0.0043			0.0095	0.034	0.0058	0.0022		0.0026		0.029	<0.01*	0.0044	<0.01*
	09/28/17	8206B	0.095	<0.01	<0.01*	<0.01*	0.083	0.098	0.016	<0.1		<0.1					0.0096			0.0098	0.013		0.021	0.0025			0.0084	0.043	0.004	<0.01		0.0019		0.013	<0.01*	<0.01*	<0.01*
	06/12/17	8260B	0.087	0.0013	<0.01*	<0.01*	0.062	0.091	0.013	<0.1		<0.1					0.013			0.014	0.017		0.019	0.0024			0.0086	0.042	0.0044	<0.01		<0.01*		0.017	<0.01*	0.0027	<0.01*
	03/15/17	8260B	0.078	0.0017	<0.01*	<0.01*	0.051	0.08	0.01	0.013		<0.1					0.02			0.019	0.021		0.02	0.0035			0.01	0.038	0.0053	<0.01		0.0033		0.02	<0.01*	0.0054	<0.01*
	11/02/16	8260B	0.043	<0.01	<0.01*	<0.01*	0.029	0.064	0.0056	<0.1		<0.1					0.027			0.028	0.025		0.014	0.0029			0.0065	0.023	0.005			0.0053		0.042	<0.01*	0.0036	<0.01*
	09/11/16	8260B	0.053	<0.01	<0.01*	<0.01*	0.039	0.076	0.0075	<0.1		<0.01					0.032			0.022	0.024		0.016	<0.01			0.005	0.027	0.0031			0.0038		0.037	<0.01*	0.0045	<0.01*
	06/09/16	8206B	0.058	0.00075	<0.001	<0.001*	0.035	0.083	0.011	0.013		0.0056					0.03			0.032	0.032		0.016	0.0024			0.0068	0.029	0.0044			0.0065		0.04	<0.001	0.0062	<0.001
	02/29/16	8260B	0.065	<0.01	<0.01*	<0.01*	0.041	0.082	0.014	0.01		<0.1					0.027			0.029	0.036		0.018	0.0024			0.0072	0.032	0.004			0.0052		0.046	<0.01*	0.0044	<0.01*
	11/03/15	8260B	0.073	<0.001	<0.001		0.041	0.081	0.014	<0.01		<0.01					0.03			0.027	0.033		0.019	0.0032			0.009	0.038	0.0064			0.0067		0.048	<0.001	0.0061	<0.001
	08/18/15	8260B	0.05	<0.005	<0.005*		0.029	0.08	<0.02	<0.05		<0.05					0.027			0.026	0.036		0.017	<0.005			<0.015	0.029	0.0054			0.0062		0.052	<0.005*	0.0059	<0.005*
	06/04/15	8260B	0.033	<0.005	<0.005*		0.015	0.051	<0.02	<0.05		<0.05					0.03			0.028	0.055		0.015	<0.005			<0.015	0.022	<0.005			0.0078		0.067	<0.005*	0.0076	<0.005*
	03/16/15	8260B	0.018	<0.005	<0.005*		0.011	0.03	<0.02	<0.05		<0.05					0.036			0.034	0.074		0.0074	<0.005			<0.015	0.013	<0.005			0.0071		0.13	<0.005*	0.009	<0.005*
	11/14/14	8260B	0.087	<0.01	<0.01*		0.043	0.11	<0.04*	<0.1		<0.1					0.024			0.035	0.068		0.014	<0.01			<0.03	0.03	<0.01			<0.01*		0.096	<0.01*	0.011	<0.01*
	09/18/14	8260B	0.038	<0.01	<0.01*		0.03	0.042	<0.04*	<0.1		<0.1					0.021			0.028	0.065		<0.01	<0.01			<0.03	0.014	<0.01			<0.01*		0.11	<0.01*	<0.01*	<0.01*
	06/05/14	8260B	0.083	<0.01	<0.1*		0.068	0.089	<0.04*	<0.1		<0.1					0.014			0.026	0.041		0.017	<0.01			<0.03	0.033	<0.01			<0.01*		0.065	<0.01*	<0.01*	<0.01*
	04/14/14	8260B	0.074	<0.005	<0.005*		0.044	0.062	<0.02	<0.05		<0.05					0.012			0.024	0.046		0.013	<0.005			<0.015	0.026	<0.005			<0.005*		0.072	<0.005*	0.0089	<0.005*
MKTF-10	10/30/19	8260B	0.76	0.20	<0.01*	<0.01*	0.18	0.065	0.08	<0.1		<0.1		<0.02			0.039			0.031	0.0059		0.061	0.0066	<0.1	<0.03*	<0.03	0.12	0.0099			<0.01*		<0.01	<0.01*	<0.01*	0.01
	08/22/19	8260B	0.85	0.19	<0.01*	<0.01*	0.18	0.066	0.085	0.1		<0.1		0.03			0.034			0.037	0.0075		0.057	0.009	<0.1	<0.03*	0.021	0.12	0.011			<0.01*		<0.01	<0.01*	<0.01*	0.01
	05/13/19	8260B	0.83	0.22	<0.05*	<0.05*	0.2	0.073	0.088	<0.5		<0.5		<0.1			<0.05			0.027	0.013		0.06	<0.05	<0.5	<0.15*	<0.15	0.13	<0.5			<0.05*		<0.05	<0.05*	<0.05*	0.023
	03/26/19	8260B	0.86	0.22	<0.1*	<0.1*	0.18	0.067	0.086	<1.0		<1.0		<0.2			0.05			0.04	<0.1*		0.048	<0.1	<1.0	<0.3*	<0.3	0.11	<0.1			<0.1*		<0.1	<0.1*	<0.1*	0.042
	11/20/18	8260B	1.1	0.25	<0.02*	<0.02*	0.23	0.068	0.087	<0.2		<0.2		0.073			0.058			<0.02	0.0051		0.06	0.0082	<0.2	<0.06*	0.014	0.14	0.012			<0.02*		<0.02	<0.02*	<0.02*	0.0074
	09/04/18	8260B	1	0.23	<0.05*	<0.05*	0.22	0.074	0.099	<0.5		<0.5		0.063			0.047			<0.05*	0.012		0.062	<0.05	<0.5	<0.15*	0.014	0.15	<0.05			<0.05*		<0.05	<0.05*	<0.05*	0.018
	05/02/18	8260B	1.2	0.27	<0.05*	<0.05*	0.24	0.088	0.1	<0.5		<0.5		0.085			0.06			<0.05*	<0.05*		0.073	0.011	<0.5	<0.15*	0.02	0.17	0.014			<0.05*		<0.05	<0.05*	<0.05*	<0.05*
	02/14/18	8260B	0.97	0.23	<0.05*	<0.05*	0.2	0.067	0.083	<0.5		<0.5		0.068			0.066			<0.05*	<0.05*		0.062	0.0075	<0.5	<0.15*	0.022	0.13	0.011			<0.05*		<0.05	<0.05*	<0.05*	0.018
	11/28/17	8260B	1	0.25	<0.1*	<0.1*	0.24	0.11	0.13	<1		<1		0.067			0.051			<0.1*	<0.1*		0.068	0.024	<1	<0.3*	0.034	0.14	0.023			<0.1*		<0.1	<0.1*	<0.1*	<0.1*
	09/28/17	8260B	0.92	0.21	<0.1*	<0.1*	0.23	0.098	0.097	<1		<1		<0.2			0.053			<0.1*	<0.1*		0.053	<0.1	<1	<0.3*	<0.3	0.13	<0.1			<0.1*		<0.1	<0.1*	<0.1*	<0.1*
	06/08/17	8260B	0.93	0.22	<0.1*	<0.1*	0.17	0.066	0.075	<1		<1		0.077			0.045			<0.1*	<0.1*		0.055	0.012	<1	<0.3*	0.018	0.12	0.011			<0.1*		<0.1	<0.1*	<0.1*	<0.1*
	03/02/17	8260B	0.98	0.22	<0.1*	<0.1*	0.23	0.064	0.066	<1		<1		<0.2			0.043			<0.1*	<0.1*		0.04	<0.1	0.084	<0.3*	<0.3	0.11	0.033			<0.1*		<0.1	<0.1*	<0.1*	<0.1*
	11/02/16	8260B	0.85	0.20	<0.1*	<0.1*	0.24	0.1	0.1	<1.0		0.69		<0.2			0.026			<0.01	<0.01*		0.049	<0.01	0.062	<0.3*	0.032	0.13	<0.1			<0.1*		<0.1	<0.1*	<0.1*	<0.1*
	09/11/16	8260B	0.84	0.20	<0.1*	<0.1*	0.35	0.15	0.16	<1.0		1.3		<0.2			0.032			<0.05*	<0.05*		0.042	<0.1	0.12	<0.3*	<0.3	0.12	<0.1			<0.1*		<0.1	<0.1*	<0.1*	<0.1*
	06/09/16	8260B	0.9	0.20	<0.02*		0.22	0.067	0.088	0.29		0.69		0.039			0.023			0.039	0.0071		0.052	0.0086	0.072	<0.06*	0.021	0.13	0.011			<0.02*		<0.02	<0.02*	<0.02*	<0.02*
	02/29/16	8260B	0.9	0.20	<0.1*		0.21	0.074	0.087	0.16		0.68					0.031			0.07	<0.1*		0.034	<0.1		0.025	0.018	0.12	<0.1			<0.1*		<0.1	<0.1*	<0.1*	<0.1*
	11/03/15	8260B	0.85	0.21	<0.05*		0.17	<0.2*	<0.2*	<0.5		<0.5					0.057			0.078	<0.05*		<0.05	<0.05			<0.15	0.12	<0.05			<0.05*		<0.05	<0.05*	<0.05*	<0.05*
	08/18/15	8260B	0.88	0.22	<0.05*		0.23	<0.2*	<0.2*	0.52		1.6					<0.05			0.067	<0.05*		0.054	<0.05			<0.15	0.14	<0.05			<0.05*		<0.05	<0.05*	<0.05*	<0.05*
	06/04/15	8260B	0.79	0.21	<0.05*		0.19	<0.2*	<0.2*	<0.5		1.3					<0.05			0.06	<0.05*		0.054	<0.05			<0.15	0.13	<0.05			<0.05*		<0.05	<0.05*	<0.05*	<0.05*
	03/16/15	8260B	0.96	0.24	<0.05*		0.2	<0.2*	<0.2*	<0.5		<0.5					<0.05			0.078	<0.05*		0.051	<0.05			<0.15	0.14	<0.05			<0.05*		<0.05	<0.05*	<0.05*	<0.05*
	11/14/14	8260B	1.5	0.57	<0.02*		0.36	0.24	0.38	<0.2		<0.2					0.066			0.039	<0.02*		0.12	0.034			0.084	0.36	0.04			<0.02*		<0.02	<0.02*	<0.2*	<0.02*
	09/18/14	8260B	0.5	0.11	<0.05*		0.13	<0.2*	<0.2*	<0.5		2.8					<0.05			0.057	<0.05*		<0.05	<0.05			<0.15	0.068	<0.05			<0.05*		<0.05	<0.05*	<0.05*	<0.05*
	06/06/14	8260B	0.27	0.065	<0.01*		0.079	<0.04*	<0.04*	0.21		1.8					0.033			0.051	<0.01*		0.019	<0.01			<0.03	0.038	<0.01			<0.01*		0.015	<0.01*	<0.01*	<0.01*
	04/11/14	8260B	0.96	0.21	<0.05*		0.2	<0.2*	<0.2*	1.2		1					<0.05			<0.05*	<0.05*		<0.05	<0.05			<0.15	0.13	<0.05			<0.05*		<0.05	<0.05*	<0.05*	<0.05*
MKTF-11	10/30/19	8260B	0.3	0.055	<0.05*	<0.02*	0.067	0.014	0.013	<0.2		<0.2		<0.04			<0.02			0.027	<0.02*		<0.2*	0.025	<0.02	<0.2	<0.06*	<0.06	0.058	0.0068			<0.02*		<0.02	<0.02*	<0.02*	0.023
	08/21/19	8260B	0.27	0.044	<0.01*	<0.01*	0.050	0.015	0.017	<0.1		<0.1		0.023			0.0069			0.039	<0.01*		<0.1*	0.021	0.0042	<0.1	<0.03*	0.013	0.047	0.0082			<0.01*		<0.01	<0.01*	<0.01*	0.028
	05/13/19	8260B	0.26	0.053	<0.05*	<0.05*	0.054	0.017	<0.2*	<0.5		<0.5		<0.1			<0.05			0.055	<0.05*		<0.5*	0.019	<0.05	<0.5	<0.15*	<0.15	0.047	<0.05			<0.05*		<0.05	<0.05*	<0.05*	0.044
	03/26/19	8260B	0.33	0.072	<0.1*	<0.1*	0.065	<0.4*	<0.4*	<1.0		<1.0		<0.2			<0.1*			0.058	<0.1*		<1.0*	<0.1	<0.1	<1.0	<0.3*	<0.3	0.044	<0.1			<0.1*		<0.1	<0.1*	<0.1*	0.058
	11/20/18	8260B	0.31	0.07	<0.05*	<0.05*	0.049	<0.2*	<0.2*	<0.5		<0.5		0.014			<0.05			0.023	<0.05*		<0.2*	0.014	<0.05	<0.5	<0.15*	<0.15	0.025	<0.05			<0.05*		<0.05	<0.05*	<0.05*	0.013
	09/04/18	8260B	0.37	0.063	<0.05*	<0.05*	0.079	0.031	0.033	<0.5		<0.5		<0.1			<0.05			0.029	<0.05*		<0.5*	0.024	<0.05	<0.5	<0.15*	<0.15	0.073	<0.05			<0.05*		<0.05	<0.05*	<0.05*	0.027
	05/02/18	8260B	0.5	0.094	<0.02*	<0.02*	0.1	0.025	0.024	0.071		0.13		0.024			<0.02			0.032	<0.02*		<0.02	0.035	0.0045	0.021	<0.06*	0.01	0.096	0.011			<0.02*		<0.02	<0.02*	<0.02*	0.028
	02/08/18	8260B	0.37	0.068	<0.02*	<0.02*	0.070	0.018	0.018	0.11		0.15		0.023			<0.02			0.031	<0.02*		<0.02	0.029	0.0046	0.033	<0.06*	0.0094	0.07	0.0097			<0.02*		<0.02	<0.02*	<0.02*	0.025
	11/28/17	8260B	0.33	0.063	<0.02*	<0.02*	0.065	0.018	0.018	0.094		0.15		0.023			<0.02			0.04	<0.02*		<0.2*	0.027	0.0056	0.029	<0.06*	0.01	0.068	0.012			<0.02*		<0.02	<0.02*	<0.02*	0.03
	09/26/17	8260B	0.34	0.072	<0.02*	<0.02*	0.075	0.023	0.02	0.042		0.2		0.017			<0.02			0.025	<0.02*		<0.2*	0.025	0.004	0.047	<0.06*	0.0084	0.065	0.0088			<0.02*		<0.02	<0.02*	<0.02*	0.022
	06/08/17	8260B	0.21	0.044	<0.02*	<0.02*	0.035	0.016	0.014	0.05		0.13		0.024			<0.02			0.053	<0.02*		<0.2*	0.018	0.0029	0.016	<0.06*	0.0067	0.042	0.0086			<0.02*		<0.02	<0.02*	<0.02*	0.042
	03/02/17	8260B	0.33	0.058	<0.02*	<0.02*	0.055	0.018	0.014	<0.2		<0.2		<0.04			<0.02			0.055	<0.02*		0.021	0.023	<0.02	<0.2	<0.06*	0.0043	0.067	0.014			<0.02*		<0.02	<0.02*	<0.02*	0.054
	11/02/16	8260B	0.25	0.049	<0.05*	<0.05*	0.048	<0.2*	0.2	<0.5		0.22		<0.1			<0.05			0.057	<0.05*			0.021	<0.05	0.026	<0.15*	0.017	0.056	0.017			<0.05*		<0.05	<0.05*	<0.05*	0.051
	09/11/16	8260B	0.25	0.045	<0.05*	<0.05*	0.050	0.021	0.014	<0.5		0.27		<0.1			<0.05			0.053	<0.05*			0.019	<0.05		<0.15*	<0.15	0.058	<0.05			<0.05*		<0.05	<0.05*	<0.05*	0.056
	06/09/16	8260B	0.29	0.052	<0.01*	<0.01*	0.053	0.019	0.016	0.2		0.17		0.024			<0.01			0.064	<0.01*			0.022	0.0035		<0.03*	0.0095	0.058	0.0089			<0.01*		<0.01	<0.01*	<0.01*	0.062
	02/29/16	8260B	0.31	0.059	<0.1*	<0.1*	0.062	0.048	0.048	<1.0		<1.0					<0.1*			0.06	<0.1*			<0.1	<0.1		0.028	<0.3	0.058	<0.1			<0.1*		<0.1	<0.1*	<0.1*	0.049
	11/03/15	8260B	0.57	0.14	<0.05*		<0.1*	<0.2*	<0.2*	<0.5		<0.5					<0.05			<0.05*	<0.05*			<0.05	<0.05			<0.15	0.087	<0.05			<0.05*		<0.05	<0.05*	<0.05*	<0.05*
	08/18/15	8260B	0.23	0.046	<0.02*		0.054	<0.08*	<0.08*	<0.2		<0.2					<0.02			0.063	<0.02*			0.022	<0.02			<0.06	0.051	<0.02			<0.02*		<0.02	<0.02*	<0.02*	0.049
	06/04/15	8260B	0.57	0.14	<0.02*		0.110	<0.08*	<0.08*	<0.2		0.43					<0.02			0.031	<0.02*			0.036	<0.02			<0.06	0.099	<0.02			<0.02*		<0.02	<0.02*	<0.02*	0.034
	03/16/15	8260B	0.51	0.11	<0.02*		0.093	<0.08*	<0.08*	<0.2		<0.2					<0.02			0.048	<0.02*			0.033	<0.02			<0.06	0.094	<0.02			<0.02*		<0.02	<0.02*	<0.02*	0.045
	11/13/14	8260B	0.4	0.06	<0.02*		0.058	<0.08*	<0.08*	<0.2		<0.2					<0.2*			0.047	<0.02*			0.029	<0.02			<0.06	0.078	<0.02			<0.02*		<0.02	<0.02*	<0.02*	0.054
	09/15/14	8260B	0.36	0.058	<0.05*		<0.1*	<0.2*	<0.2*	<0.5		<0.5					<0.5*			0.057	<0.05*			<0.05	<0.05			<0.15	0.069	<0.05			<0.05*		<0.05	<0.05*	<0.05*	<0.05*
	06/05/14	8260B	0.27	0.052	<0.005*		0.066	<0.02*	<0.02	0.29		0.17					0.016			0.053	<0.005			0.029	<0.005			<0.015	0.068	0.0078			<0.005*		0.014	<0.005*	<0.005*	0.018
	04/11/14	8260B	0.41	0.062	<0.05*		<0.1*	<0.2*	<0.2*	<0.5		<0.5					<0.05			0.065	<0.05*			<0.05	<0.05			<0.15	0.097	<0.05			<0.05*		<0.05	<0.05*	<0.05*	<0.05*
MKTF-12		--	SPH Detected - No samples were collected.																																			

8.17.5 MKTF WELLS
Volatile Organic Compounds Analytical Results

			PARAMETERS																																		
		STANDARDS	1,2,4-Trimethyl benzene (mg/L)	1,3,5-Trimethyl benzene (mg/L)	1,2-Dichloro ethane (EDC) (mg/L)	1,2-Dibro moethane (EDB) (mg/L)	Naphtha-lene (mg/L)	1-Methyl naphtha-lene (mg/L)	2-Methyl naphtha-lene (mg/L)	Acetone (mg/L)	Bromo methane (mg/L)	(Methyl ethyl ketone) 2-Butanone (mg/L)	Chloro benzene (mg/L)	Chloro-ethane (mg/L)	Chloro-form (mg/L)	Chloro-methane (mg/L)	cis-1,2-DCE (mg/L)	1,2-Dichloro benzene (mg/L)	1,4-Dichloro benzene (mg/L)	1,1-Dichloro ethane (mg/L)	1,1-Dichloro ethene (mg/L)	1,2-Dichloro propane (mg/L)	2-Hexanone (mg/L)	Isopropyl benzene (mg/L)	4-Isopropyl toluene (mg/L)	4-Methyl-2-pen-tanone (mg/L)	Methylene Chloride (mg/L)	n-Butyl benzene (mg/L)	n-Propyl benzene (mg/L)	sec-Butyl benzene (mg/L)	Styrene (mg/L)	tert-Butyl benzene (mg/L)	Tetra-chloro ethene (PCE) (mg/L)	1,2,4-Trichloro-benzene (mg/L)	1,1,1-Trichloro ethane (mg/L)	1,1,2-Trichloro ethane (mg/L)	Trichloro ethene (TCE) (mg/L)	Vinyl Chloride (mg/L)
		WQCC 20 NMAC 6.2.3103 (DEC 2018)	NE	NE	0.005	0.00005	0.03	NE	NE	NE	NE	NE	NE	NE	0.1	NE	0.07	0.6	0.075	0.025	0.007	0.005	NE	NE	NE	NE	0.005	NE	NE	NE	0.1	NE	0.005	0.07	0.2	0.005	0.005	0.002
		40 CFR 141.61 MCL	NE	NE	0.005	0.00005	NE	NE	NE	NE	NE	NE	NE	NE	NE	NE	0.07	NE	0.075	NE	0.007	0.005	NE	NE	NE	NE	0.005	NE	NE	NE	0.1	NE	0.005	0.07	0.2	0.005	0.005	0.002
		NMED Tap Water (JUNE 2019)	NE	NE	0.0017	0.0000747	0.00165	0.0114	0.035	14.06	0.0075	5.56	0.0776	20.86	0.00229	0.0203	0.0365	NE	0.0048	0.0275	0.284	0.00437	NE	0.447	NE	1.24	0.106	NE	NE	NE	1.21	NE	NE	0.00398	8	0.00042	0.00259	0.00032
		EPA RSL for Tap Water (NOVEMBER 2019)	0.056	0.06	0.00017	0.0000075	0.00017	0.0011	0.036	14	0.0075	5.6	0.078	21	0.00022	0.19	0.036	0.3	0.00048	0.0028	0.28	0.00085	0.038	NE	NE	6.3	0.011	1	0.66	2	1.2	0.69	0.011	0.0012	8	0.00028	0.00049	0.000019
Well ID	DATE SAMPLED	METHOD																																			
MKTF-13	10/29/19	8260B	0.35	0.1	<0.02*	<0.02*	0.15	0.081	0.093	<0.2		0.042					<0.02	<0.02			<0.02*			0.025	<0.02			<0.06	0.041	<0.02								
	08/20/19	--	SPH Detected - No samples were collected.																																			
	05/09/19	8260B	0.39	0.12	<0.02*	<0.02*	0.17	0.11	0.12	<0.2		<0.2					<0.02	<0.02			<0.02*			0.014	0.0053			<0.06	0.021	<0.02								
	03/26/19	8260B	0.59	0.18	<0.02*	<0.02*	0.21	0.12	0.14	<0.2		<0.2					<0.02	<0.02			<0.02*			0.033	0.009			<0.06	0.06	0.0088								
	11/28/18	8260B	0.52	0.14	<0.02*	<0.02*	0.17	0.094	0.11	<0.2		<0.2					<0.02	<0.02			<0.02*			0.022	0.0061			0.0065	0.04	0.0054								
	08/30/18	8260B	0.58	0.15	<0.02*	<0.02*	0.21	0.11	0.13	0.017		<0.2					<0.02	<0.02			<0.02*			0.029	0.0065			0.007	0.059	0.0058								
	05/10/18	8260B	0.69	0.18	<0.005*	<0.005*	0.23	0.12	0.14	0.037		<0.05					<0.001	0.00075			0.0025			0.04	0.0088			0.013	0.075	0.0089								
	03/15/17	8260B	0.68	0.17	<0.01*	<0.01*	0.21	0.11	0.13	0.03		<0.1					<0.01				<0.01*			0.04	0.009			0.015	0.083	0.01								
MKTF-14		--	SPH Detected - No samples were collected.																																			
MKTF-15	10/30/19	--	SPH Detected - No samples were collected.																																			
	08/21/19	--	SPH Detected - No samples were collected.																																			
	05/13/19	8260B	0.51	0.17	<0.05*	<0.05*	0.087	0.024	0.02	<0.5		<0.5		<0.1			<0.05			0.025	<0.05*			0.11	<0.05	<0.5		<0.15	0.14	0.015			<0.05*		<0.05	<0.05*	<0.05*	0.026
	03/25/19	--	SPH Detected - No samples were collected.																																			
	11/19/18	--	SPH Detected - No samples were collected.																																			
	08/28/18	8260B	0.71	0.2	<0.05*	<0.05*	0.085	0.019	0.024	<0.5		<0.5		0.025			<0.05			0.076	<0.005			0.097	0.015	<0.5		0.019	0.16	<0.05			<0.05*		<0.05	<0.05*	<0.05*	0.021
	05/02/18	8260B	0.79	0.22	<0.1*	<0.1*	0.11	0.05	0.048	<1.0		<1.0		<0.2			<0.1*			0.075	<0.1*			0.12	0.016	<1.0		0.021	0.17	0.02			<0.1*		<0.1	<0.1*	<0.1*	<0.1*
	11/28/17	8260B	0.72	0.21	<0.1*	<0.1*	0.1	<0.4*	<0.4*	0.2		0.36		0.041			<0.1*			<0.1*	<0.1*			0.12	0.027	<1		0.031	0.17	0.03			<0.1*		<0.1	<0.1*	<0.1*	0.018
	06/08/17	8260B	0.79	0.25	<0.1*	<0.1*	0.052	<0.4*	<0.4*	0.28		0.47		<0.2			<0.1*			<0.1*	<0.1*			0.16	0.023	<1		0.023	0.19	0.027			<0.1*		<0.1	<0.1*	<0.1*	<0.1*
	03/02/17	8260B	0.75	0.21	<0.1*	<0.1*	0.078	<0.4*	0.032	<1		<1		<0.2			<0.1*			0.042	<0.1*			0.11	<0.1	<1		<0.3	0.16	0.039			<0.1*		<0.1	<0.1*	<0.1*	0.045
	11/02/16	8260B	0.63	0.19	<0.05*	<0.05*	0.097	<0.2*	<0.2*	0.4		0.66					<0.05			<0.05*	<0.05*			0.12	0.017	0.06		0.019	0.15	0.023			<0.05*		<0.05	<0.05*	<0.05*	0.024
	09/11/16	8260B	0.57	0.17	<0.05*	<0.05*	0.086	0.015	0.014	1.2		1.3					<0.05			<0.05*	<0.05*			0.12	<0.05	0.083		<0.15	0.14	0.0078			<0.05*		<0.05	<0.05*	<0.05*	<0.05*
	06/09/16	--	SPH Detected - No samples were collected.																																			
	03/16/16	--	SPH Detected - No samples were collected.																																			
	1Q & 2Q 2015	--	SPH Detected - No samples were collected.																																			
	11/14/14	--	SPH Detected - No samples were collected.																																			
	09/17/14	8260B	0.66	0.18	<0.05*		0.12	<0.2*	<0.2*	<0.5		<0.5					<0.05			<0.05*	<0.05*			0.068	<0.05			<0.15	0.14	<0.05			<0.05*		<0.05	<0.05*	<0.05*	<0.05*
	06/05/14	8260B	0.33	0.095	<0.005*		0.08	0.03	0.035	0.29		0.062					<0.005			<0.005	<0.005			0.059	0.0059			<0.015	0.097	0.012			<0.005*		<0.005	<0.005*	<0.005*	<0.005*
	04/10/14	8260B	0.46	0.11	<0.01*		0.072	<0.04*	<0.04*	<0.1		<0.1					<0.01			<0.01	<0.01*			0.053	<0.01			<0.03	0.094	0.012			<0.01*		<0.01	<0.01*	<0.01*	<0.01*
MKTF-16	10/30/19	8260B	0.38	<0.1*	<0.1*	<0.1*	0.14	0.032	<0.4*	<1.0	<0.3*	<1.0					<0.1*			0.069	<0.1*			0.021	<0.1		<0.3*	<0.3	0.074	<0.1			<0.1*		<0.1	<0.1*	<0.1*	<0.1*
	08/22/19	8260B	0.093	<0.1*	<0.1*	<0.1*	0.048	<0.4*	<0.4*	<1.0	<0.3*	<1.0					<0.1*			0.064	<0.1*			<0.1	<0.1		<0.3*	<0.3	<0.1	<0.1			<0.1*		<0.1	<0.1*	<0.1*	<0.1*
	05/14/19	8260B	0.24	0.04	<0.1*	<0.1*	0.081	<0.4*	<0.4*	<1.0	<0.3*	<1.0					<0.1*			<0.1*	<0.1*			<0.1	<0.1		0.018	<0.3	0.029	<0.1			<0.1*		<0.1	<0.1*	<0.1*	<0.1*
	02/20/19	8260B	0.54	0.075	<0.1*	<0.1*	0.12	<0.4*	<0.4*	<1.0	<0.3*	<1.0					<0.1*			0.053	<0.1*			0.029	<0.1			<0.3	0.075	<0.1			<0.1*		<0.1	<0.1*	<0.1*	<0.1*
	11/29/18	8260B	0.39	0.036	<0.1*	<0.1*	0.089	<0.4*	<0.4*	<1.0	<0.3*	<1.0					<0.1*			<0.1*	<0.1*			<0.1	<0.1			<0.3	0.042	<0.1			<0.1*		<0.1	<0.1*	<0.1*	<0.1*
	08/31/18	8260B	0.58	0.07	<0.1*	<0.1*	0.15	<0.4*	0.037	<1.0	<0.3*	<1.0					<0.1*			0.047	<0.1*			<0.1	<0.1			<0.3	0.066	<0.1			<0.1*		<0.1	<0.1*	<0.1*	<0.1*
	05/11/18	8260B	0.69	0.098	<0.05*	<0.05*	0.14	0.04	0.043	<0.5	<0.15*	<0.5					<0.05			0.036	<0.05*			0.03	<0.05			<0.15	0.078	<0.05			<0.05*		<0.05	<0.05*	<0.05*	<0.05*
	02/15/18	8260B	0.026	0.041	<0.01*	<0.01*	0.0081	0.0065	<0.04*	0.05	<0.03*	<0.1					<0.01			0.0062	<0.01*			<0.01	<0.01			0.0019	<0.01	<0.01			<0.01*		<0.01	<0.01*	<0.01*	0.0058
	11/29/17	8260B	0.69	0.19	<0.1*	<0.1*	0.16	0.066	0.072	<1	<0.3*	<1					<0.1*			<0.1*	<0.1*			0.033	<0.1			<0.3	0.067	<0.1			<0.1*		<0.1	<0.1*	<0.1*	<0.1*
	09/26/17	8260B	0.75	0.2	<0.1*	<0.1*	0.17	0.053	0.057	<1	<0.3*	<1					<0.1*			0.042	<0.1*			0.031	<0.1			<0.3	0.088	<0.1			<0.1*		<0.1	<0.1*	<0.1*	<0.1*
	06/08/17	8260B	0.44	0.18	<0.1*	<0.1*	0.12	0.046	0.051	<1	<0.3*	<1					<0.1*			<0.1*	<0.1*			0.013	<0.1			<0.3	0.031	<0.1			<0.1*		<0.1	<0.1*	<0.1*	<0.1*
	03/14/17	8260B	0.75	0.23	<0.1*	<0.1*	0.14	0.056	0.062	<1	<0.3*	<1					<0.1*			0.03	<0.1*			0.033	<0.1			<0.3	0.086	<0.1			<0.1*		<0.1	<0.1*	<0.1*	<0.1*
	11/03/16	8260B	0.56	0.21	<0.1*	<0.1*	0.17	0.056	0.057	<1.0		<1.0					<0.1*			<0.1*	<0.1*			0.015	<0.1			<0.3	0.052	<0.1			<0.1*		<0.1	<0.1*	<0.1*	<0.1*
	09/12/16	8260B	0.78	0.27	<0.1*	<0.1*	0.23	0.052	0.06	<1.0		<1.0					<0.1*			0.065	<0.1*			0.019	<0.1			<0.3	0.082	<0.1			<0.1*		<0.1	<0.1*	<0.1*	<0.1*
	06/09/16	8260B	0.73	0.24	<0.02*	<0.02*	0.17	0.046	0.055	<0.2		<0.2					0.00084			0.049	<0.02*			0.022	0.005			0.016	0.067	0.0059			<0.02*		<0.02	<0.02*	<0.02*	<0.02*
	02/29/16	8260B	0.69	0.24	<0.1*	<0.1*	0.14	0.057	0.063	<1.0		<1.0					<0.1*			0.05	<0.1*			<0.1	<0.1			<0.3	0.059	<0.1			<0.1*		<0.1	<0.1*	<0.1*	<0.1*
	11/03/15	8260B	1.1	0.33	<0.05*		0.2	<0.2*	<0.2*	<0.5		<0.5					<0.05			0.061	<0.05*			<0.05	<0.05			<0.15	0.092	<0.05			<0.05*		<0.05	<0.05*	<0.05*	<0.05*
	08/23/15	8260B	0.89	0.32	<0.1*		0.2	<0.4*	<0.4*	<1.0		<1.0					<0.1*			<0.1*	<0.1*			<0.1	<0.1			<0.3	0.11	<0.1			<0.1*		<0.1	<0.1*	<0.1*	<0.1*
	06/08/15	8260B	0.77	0.27	<0.05*		0.17	<0.2*	<0.2*	<0.5		<0.5					<0.05			<0.05*	<0.05*			<0.05	<0.05			<0.15	0.084	<0.05			<0.05*		<0.05	<0.05*	<0.05*	<0.05*
	03/16/15	8260B	0.94	0.31	<0.05*		0.2	<0.2*	<0.2*	<0.5		<0.5					<0.05			<0.05*	<0.05*			<0.05	<0.05			<0.15	0.11	<0.05			<0.05*		<0.05	<0.05*	<0.05*	<0.05*
	11/18/14	8260B	1	0.36	<0.05*		0.16	<0.2*	<0.2*	<0.5		<0.5					<0.05			0.081	<0.05*			<0.05	<0.05			<0.15	0.09	<0.05			<0.05*		<0.05	<0.05*	<0.05*	<0.05*
	09/17/14	8260B	1.1	0.36	<0.05*		0.26	<0.2*	<0.2*	<0.5		<0.5					<0.05			<0.05*	<0.05*			<0.05	<0.05			<0.15	0.12	<0.05			<0.05*		<0.05	<0.02*	<0.05*	<0.05*
	06/05/14	8260B	1.2	0.36	<0.05*		0.24	<0.2*	<0.2*	<0.5		<0.5					<0.05			<0.05*	<0.05*			<0.05	<0.05			<0.15	0.15	<0.05			<0.05*		<0.05	<0.05*	<0.05*	<0.05*
	04/10/14	8260B	0.49	0.12	<0.02*		0.07	<0.08*	<0.08*	<0.2		<0.2					<0.02			<0.02	<0.02*			0.053	<0.02			<0.06	0.099	<0.02			<0.02*		<0.02	<0.02*	<0.02*	<0.02*
MKTF-17	10/29/19	8260B/8011/504.1	0.15	0.038	<0.005*	<0.0000093	0.11	0.042	0.011	<0.05	<0.015*	<0.05					<0.005			<0.005	<0.005		0.008	0.042	<0.005	0.0044		<0.015	0.085	0.0046	0.0015		<0.005*		<0.005	<0.005*	<0.005*	<0.005*
	08/20/19	8260B/8011/504.1	0.088	0.0018	<0.005*	<0.0000095	0.029	0.024	0.0069	0.018	<0.015*	<0.05					<0.005			<0.005	<0.005			0.034	0.0018			0.0067	0.066	0.0047	<0.005		<0.005*		<0.005	<0.005*	<0.005*	<0.005*
	05/09/19	8260B/8011/504.1	0.19	0.017	<0.005*	<0.0000093	0.15	0.042	0.025	<0.05	<0.015*	<0.05					<0.005			<0.005	<0.005			0.027	<0.005			0.0027	0.046	0.0031	<0.005		<0.005*		<0.005	<0.005*	<0.005*	<0.005*
	03/26/19	8260B	0.022	<0.005	<0.005*	<0.005*	0.013	0.006	<0.02	<0.05	<0.015*	<0.05					<0.005			<0.005	<0.005			0.00258	<0.005			<0.015	0.021	<0.005	<0.005		<0.005*		<0.005	<0.005*	<0.005*	<0.005*
	11/28/18	8260B	<0.005	<0.005	<0.005*	<0.005*	<0.01	<0.02*	<0.02	<0.05	<0.015*	<0.05					<0.005			<0.005	<0.005			0.0025	<0.005			<0.015	0.0028	<0.005	<0.005		<0.005*		<0.005	<0.005*	<0.005*	<0.005*
	08/24/18	8260B	0.72	0.11	<0.02*	0.033	0.52	0.21	0.29	<0.2	<0.06*	<0.2					<0.02			<0.02	<0.02*			0.034	0.0064			0.016	0.099	0.0077	<0.02		<0.02*		<0.02	<0.02*	<0.02*	<0.02*
	05/04/18	8260B	0.0014	<0.005	<0.005*	<0.005*	0.0024	0.0032	<0.02	<0.05	<0.015*	<0.05					<0.005			<0.005	<0.005			0.0072	<0.005			<0.015	0.0091	0.0015	<0.005		<0.005*		<0.005	<0.005*	<0.005*	<0.005*
	02/16/18	8260B	0.00062	<0.005	<0.005*	<0.005*	0.0051	0.0043	<0.02	<0.05	<0.015*	<0.05					<0.005			<0.005	<0.005			0.0099	<0.005			0.00083	0.013	0.0015	<0.005		<0.005*		<0.005	<0.005*	<0.005*	<0.005*
	12/01/17	8260B	<0.005	<0.005	<0.005*	<0.005*	0.0035	<0.02*	<0.02	<0.05	<0.015*	<0.05					<0.005			<0.005	<0.005			0.0097	0.0015			0.0016	0.016	0.0025	<0.005		<0.005*		<0.005	<0.005*	<0.005*	<0.005*
	09/26/17	8260B	0.00073	<0.005	<0.005*	<0.005*	0.0079	0.012	<0.02	<0.05	<0.015*	<0.05					<0.005			<0.005	<0.005			0.049	0.0022			0.0049	0.11	0.0087	<0.005		<0.005*		<0.005	<0.005*	<0.005*	<0.005*
	06/14/17	8260B	0.075	<0.005	<0.005*	<0.005*	0.032	0.025	0.0016	<0.05	<0.015*	<0.05					<0.005			<0.005	<0.005			0.035	0.0021			0.0035	0.077	0.0059	<0.005		<0.005*		<0.005	<0.005*	<0.005*	<0.005*
	03/15/17	8260B	0.034	0.0035	<0.01*	<0.01*	0.011	0.0072	0.0047	0.018	<0.03*	<0.1					<0.01			<0.01	<0.01*			0.01	0.0022			0.0018	0.016	0.0022	<0.01		<0.01*		<0.01	<0.01*	<0.01*	<0.01*
	11/08/16	8260B	0.0017	<0.005	<0.005*	<0.005*	0.021	0.01	0.003	<0.05	<0.015*	<0.05					<0.005			<0.005	<0.005			0.02	0.0023			0.0027	0.032	0.0035	<0.005		<0.005*		<0.005	<0.005*	<0.005*	<0.005*
	09/13/16	8260B	0.012	<0.01	<0.01*	<0.01*	0.014	0.013	<0.04*	<0.1	0.0093	<0.1					<0.01			<0.01	<0.01*			0.033	0.0034			0.0039	0.05	0.0054	0.0031		<0.01*		<0.01	<0.01*	<0.01*	<0.01*
	06/10/16	8260B	0.23	0.0046	<0.001	<0.001*	0.094	0.035	0.007	0.04		0.0064					<0.001			<0.001	<0.001			0.023	0.002			0.0016	0.043	0.0029			<0.001		<0.001	<0.001	<0.001	<0.001
	02/26/16	8260B	0.0024	<0.005	<0.005*	<0.005*	0.0025	<0.02*	<0.02	<0.05		<0.05					<0.005			<0.005	<0.005			<0.005	0.001			<0.015	<0.005	<0.005			<0.005*		<0.005	<0.005*	<0.005*	<0.005*
	11/03/15	8260B	<0.02	<0.002	<0.002		<0.004	<0.008	<0.008	<0.02		<0.02					<0.002			<0.002	<0.002			0.022	0.0024			<0.006	0.041	0.005			<0.002		<0.002	<0.002	<0.002	<0.002*
	08/18/15	8260B	<0.001	<0.001	<0.001		<0.002	<0.004	<0.004	<0.01		<0.01					<0.001			<0.001	<0.001			0.019	0.0019			<0.003	0.034	0.0026			<0.001		<0.001	<0.001	<0.001	<0.001
	06/08/15	8260B	<0.001	<0.001	<0.001		<0.002	<0.004	<0.004	<0.01		<0.01					<0.001			<0.001	<0.001			0.0011	<0.001			<0.003	0.0014	<0.001			<0.001		<0.001	<0.001	<0.001	<0.001
	03/12/15	8260B	<0.001	<0.001	<0.001		<0.002	<0.004	<0.004	<0.01		<0.01					<0.001			<0.001	<0.001			<0.001	0.0012			<0.003	<0.001	<0.001			<0.001		<0.001	<0.001	<0.001	<0.001
	11/18/14	8260B	<0.001	<0.001	<0.001		<0.002	<0.004	<0.004	<0.01		<0.01					<0.001			<0.001	<0.001			0.0091	0.003			<0.003	0.013	0.0021			<0.001		<0.001	<0.001	<0.001	<0.001
	09/18/14	8260B	<0.01	<0.01	<0.01*		<0.02	<0.04*	<0.04*	<0.1		<0.1					<0.01			<0.01	<0.01*			0.029	<0.01			<0.03	0.066	<0.01			<0.01*		<0.01	<0.01*	<0.01*	<0.01*
	06/06/14	8260B	0.064	<0.01	<0.01*		<0.02	<0.04*	<0.04*	<0.1		<0.1					<0.01			<0.01	<0.01*			0.03	<0.01			<0.03	0.06	<0.01			<0.01*		<0.01	<0.01*	<0.01*	<0.01*
	04/09/14	8260B	0.074	<0.01	<0.01*		0.032	<0.04*	<0.04*	<0.1		<0.1					<0.01			<0.01	<0.01*			0.037	<0.01			<0.03	0.096	0.01			<0.01*		<0.01	<0.01*	<0.01*	<0.01*

8.17.5 MKTF WELLS

Volatile Organic Compounds Analytical Results

			PARAMETERS																																			
		STANDARDS	1,2,4-Trimethyl benzene (mg/L)	1,3,5-Trimethyl benzene (mg/L)	1,2-Dichloro ethane (EDC) (mg/L)	1,2-Dibro moethane (EDB) (mg/L)	Naphtha-lene (mg/L)	1-Methyl naphtha-lene (mg/L)	2-Methyl naphtha-lene (mg/L)	Acetone (mg/L)	Bromo methane (mg/L)	(Methyl ethyl ketone) 2-Butanone (mg/L)	Chloro benzene (mg/L)	Chloro-ethane (mg/L)	Chloro-form (mg/L)	Chloro-methane (mg/L)	cis-1,2-DCE (mg/L)	1,2-Dichloro benzene (mg/L)	1,4-Dichloro benzene (mg/L)	1,1-Dichloro ethane (mg/L)	1,1-Dichloro ethene (mg/L)	1,2-Dichloro propane (mg/L)	2-Hexanone (mg/L)	Isopropyl benzene (mg/L)	4-Isopropyl toluene (mg/L)	4-Methyl-2-pen-tanone (mg/L)	Methylene Chloride (mg/L)	n-Butyl benzene (mg/L)	n-Propyl benzene (mg/L)	sec-Butyl benzene (mg/L)	Styrene (mg/L)	tert-Butyl benzene (mg/L)	Tetra-chloro ethene (PCE) (mg/L)	1,2,4-Trichloro-benzene (mg/L)	1,1,1-Trichloro ethane (mg/L)	1,1,2-Trichloro ethane (mg/L)	Trichloro ethene (TCE) (mg/L)	Vinyl Chloride (mg/L)
		WQCC 20 NMAC 6.2.3103 (DEC 2018)	NE	NE	0.005	0.00005	0.03	NE	NE	NE	NE	NE	NE	NE	0.1	NE	0.07	0.6	0.075	0.025	0.007	0.005	NE	NE	NE	NE	0.005	NE	NE	NE	0.1	NE	0.005	0.07	0.2	0.005	0.005	0.002
		40 CFR 141.61 MCL	NE	NE	0.005	0.00005	NE	NE	NE	NE	NE	NE	NE	NE	NE	NE	0.07	NE	0.075	NE	0.007	0.005	NE	NE	NE	NE	0.005	NE	NE	NE	0.1	NE	0.005	0.07	0.2	0.005	0.005	0.002
		NMED Tap Water (JUNE 2019)	NE	NE	0.0017	0.0000747	0.00165	0.0114	0.035	14.06	0.0075	5.56	0.0776	20.86	0.00229	0.0203	0.0365	NE	0.0048	0.0275	0.284	0.00437	NE	0.447	NE	1.24	0.106	NE	NE	NE	1.21	NE	NE	0.00398	8	0.00042	0.00259	0.00032
		EPA RSL for Tap Water (NOVEMBER 2019)	0.056	0.06	0.00017	0.0000075	0.00017	0.0011	0.036	14	0.0075	5.6	0.078	21	0.00022	0.19	0.036	0.3	0.00048	0.0028	0.28	0.00085	0.038	NE	NE	6.3	0.011	1	0.66	2	1.2	0.69	0.011	0.0012	8	0.00028	0.00049	0.000019
Well ID	DATE SAMPLED	METHOD																																				
MKTF-18	10/29/19	8260B/8011/504.1	<0.002	<0.002	<0.002	<0.0000094	0.021	0.11	0.029	<0.02		<0.02					<0.002		<0.002	<0.002	0.00076		0.0021	<0.002			0.00075	0.0026	0.0011		<0.002	<0.002		<0.002	<0.002	<0.002	<0.002*
	08/19/19	--	SPH Detected - No samples were collected.																																			
	05/16/19	8260B/8011/504.1	0.00044	<0.002	<0.002	<0.0000093	0.019	0.12	0.028	<0.02		<0.02					<0.002		<0.002	<0.002	<0.002		0.0037	<0.002			0.0019	0.0054	0.0024		<0.002	<0.002		<0.002	<0.002	<0.002	<0.002*
	03/26/19	8260B/8011/504.1	0.00062	<0.002	0.00066	<0.0000094	0.008	0.036	0.005	<0.02		<0.02					<0.002		<0.002	0.00089	0.00066		<0.002	<0.002			<0.006	0.00043	0.00052		<0.002	<0.002		<0.002	<0.002	<0.002	<0.002*
	11/28/18	8260B/8011/504.1	<0.002	<0.002	<0.002	<0.0000095	<0.004	<0.008	<0.008	<0.02		<0.02					<0.002		<0.002	<0.002	<0.002		<0.002	<0.002			<0.006	<0.002	<0.002		<0.002	<0.002		<0.002	<0.002	<0.002	<0.002*
	08/24/18	8260B/8011/504.1	<0.002	<0.002	<0.002	<0.0000095	0.027	0.12	0.036	<0.02		<0.02					0.002		<0.002	<0.002	0.00039		0.0017	<0.002			0.00074	0.0019	0.00069		<0.002	<0.002		<0.002	<0.002	<0.002	<0.002*
	05/04/18	8260B	0.00068	<0.002	<0.002	<0.002*	0.03	0.13	0.037	<0.02		<0.02					0.0032		<0.002	<0.002	0.00062		0.0027	0.00032			0.0013	0.0034	0.0018		0.00025	<0.001		<0.002	<0.002	<0.002	<0.002*
	02/16/18	8260B	0.00023	<0.002	<0.002	<0.002*	0.022	0.085	0.023	0.0018		<0.02					0.0051		<0.002	0.001	0.00072		0.0038	0.00023			0.0018	0.005	0.0021		<0.002	<0.002		<0.002	<0.002	<0.002	<0.002*
	06/14/17	8260B	<0.002	<0.002	<0.002	<0.002*	0.028	0.12	0.035	<0.02		<0.02					0.0033		<0.002	0.00093	0.0008		0.0042	0.00065			0.0031	0.0073	0.003		<0.002	<0.002		<0.002	<0.002	<0.002	<0.002*
	03/01/17	8260B	0.0013	<0.001	0.00047	<0.001*	0.031	0.089	0.03	<0.01		<0.01					0.0031		<0.001	0.00085	0.00069		0.0047	0.001			0.003	0.0083	0.003		0.00031	<0.001		<0.001	<0.001	<0.001	<0.001
	11/08/16	8260B	0.00078	<0.001	0.00042	<0.001*	0.024	0.11	0.034	0.0055		<0.01					0.0029		0.00048	<0.001	0.0006		0.002	0.00099			0.0013	0.0026	0.0015		0.00032	<0.002		<0.002	<0.002	<0.002	<0.002*
	09/13/16	8260B	0.0011	0.00015	<0.001	<0.001*	0.022	0.079	0.027	<0.01		<0.01					0.0027			<0.001	0.00062		0.0024	0.00091			0.0013	0.003	0.0016		0.00037	<0.001		<0.001	<0.001	<0.001	<0.001
	06/10/16	8260B	0.004	0.0004	<0.001	<0.001*	0.025	0.082	0.025	0.0098		0.0044					0.0036			0.00082	0.00069		0.0036	0.0011			0.0022	0.0053	0.0023		0.00031	<0.001		<0.001	<0.001	<0.001	<0.001
	02/26/16	8260B	0.014	0.0012	<0.001	<0.001*	0.035	0.14	0.04	0.0032		<0.01					0.0042			0.00076	0.00043		0.006	0.0017			0.003	0.0071	0.0032		<0.001	<0.001		<0.001	<0.001	<0.001	<0.001
	11/03/15	8260B	0.051	0.0072	<0.002		0.042	0.11	0.027	<0.02		<0.02					0.0046			<0.002	<0.002		0.0067	0.0026			<0.006	0.011	0.0037			<0.002		<0.002	<0.002	<0.002	<0.002*
	08/18/15	8260B	0.047	0.009	<0.001		0.053	0.16	0.051	<0.01		<0.01					0.0056			<0.001	<0.001		0.0077	0.0023			0.0044	0.012	0.0037			<0.001		<0.001	<0.001	<0.001	<0.001
	06/08/15	8260B	0.051	0.012	<0.001		0.043	0.099	0.026	<0.01		<0.01					0.0045			<0.001	<0.001		0.006	0.002			<0.003	0.0071	0.0019			<0.001		<0.001	<0.001	<0.001	<0.001
	03/17/15	8260B	0.065	0.019	<0.005*		0.036	0.088	0.025	<0.05		<0.05					0.0056			<0.005	<0.005		<0.005	<0.005			<0.015	<0.005	<0.005			<0.005*		<0.005	<0.005*	<0.005*	<0.005*
	11/18/14	8260B	0.096	0.023	<0.005*		0.088	0.2	0.082	<0.05		<0.05					0.0056			<0.005	<0.005		0.0088	<0.015			<0.015	0.013	<0.005			<0.005*		<0.005	<0.005*	<0.005*	<0.005*
	09/18/14	8260B	0.095	0.025	<0.005*		0.097	0.15	0.033	<0.05		<0.05					0.0073			<0.005	<0.005		0.0078	<0.005			<0.015	0.011	<0.005			<0.005*		<0.005	<0.005*	<0.005*	<0.005*
	06/06/14	8260B	0.088	0.029	<0.005*		0.068	0.13	0.028	<0.05		<0.05					<0.005			<0.005	<0.005		<0.005	<0.005			<0.015	0.0066	<0.005			<0.005*		<0.005	<0.005*	<0.005*	<0.005*
	04/14/14	8260B	0.091	0.024	<0.005*		0.077	0.13	0.043	<0.05		<0.05					<0.005			<0.005	<0.005		0.0052	<0.005			<0.015	0.0076	<0.005			<0.005*		<0.005	<0.05*	<0.005*	<0.005*
MKTF-19	10/29/19	8260B/8011/504.1	0.48	0.086	<0.02*	<0.0000095	0.45	0.19	0.24	<0.2		<0.2					<0.02			<0.02	<0.02*		0.026	<0.02		<0.06*	<0.06	0.067	<0.02	<0.02		<0.02*		<0.02	<0.02*	<0.02*	<0.02*
	08/19/19	8260B/8011/504.1	0.69	0.12	<0.02*	<0.0000095	0.5	0.23	0.31	<0.2		<0.2					<0.02			<0.02	<0.02*		0.037	0.01		<0.06*	0.035	0.11	0.011	<0.02		<0.02*		<0.02	<0.02*	<0.02*	<0.02*
	05/09/19	8260B/8011/504.1	0.63	0.1	<0.02*	<0.0000092	0.6	0.27	0.36	<0.2		<0.2					<0.02			<0.02	<0.02*		0.039	0.0054		<0.06*	<0.06	0.11	0.0071	<0.02		<0.02*		<0.02	<0.02*	<0.02*	<0.02*
	03/26/19	8260B/8011/504.1	0.55	0.095	<0.02*	<0.0000095	0.51	0.22	0.26	<0.2		<0.2					<0.02			<0.02	<0.02*		0.033	<0.02		<0.06*	<0.06	0.098	<0.02	<0.02		<0.02*		<0.02	<0.02*	<0.02*	<0.02*
	11/28/18	8260B/8011/504.1	0.58	0.079	<0.02*	<0.0000094	0.34	0.078	0.13	<0.2		<0.2					<0.02			<0.02	<0.02*		0.028	<0.02		<0.06*	0.0071	0.079	0.0046	<0.02		<0.02*		<0.02	<0.02*	<0.02*	<0.02*
	08/24/18	8260B/8011/501.1	0.72	0.11	0.02	0.0000094	0.52	0.21	0.29	<0.2		<0.2					<0.02			<0.02	<0.02*		0.034	0.0064		<0.06*	0.016	0.099	0.0077	<0.02		<0.02*		<0.02	<0.02*	<0.02*	<0.02*
	05/04/18	8260B	0.78	0.1	<0.005*	<0.005*	0.58	0.22	0.32	<0.05		<0.05					0.002			<0.005	<0.005		0.041	0.006		<0.015*	0.015	0.12	0.0078	<0.005		<0.005*		<0.005	<0.005*	<0.005*	<0.005*
	02/16/18	8260B	0.67	0.085	<0.02*	<0.02*	0.57	0.21	0.27	<0.2		<0.2					<0.02			<0.02	<0.02*		0.036	0.0048		<0.06*	0.014	0.097	0.0061	<0.02		<0.02*		<0.02	<0.02*	<0.02*	<0.02*
	12/01/17	8260B	0.72	0.1	<0.01*	<0.01*	0.6	0.27	0.34	<0.1		<0.1					<0.01			<0.01	<0.01*		0.034	0.0063		<0.03*	0.014	0.1	0.0074	<0.01		<0.01*		<0.01	<0.01*	<0.01*	<0.01*
	09/26/17	8260B	0.53	0.067	<0.01*	<0.01*	0.44	0.17	0.23	<0.1		<0.1					<0.01			<0.01	<0.01*		0.026	0.0052		<0.03*	0.013	0.073	0.006	<0.01		<0.01*		<0.01	<0.01*	<0.01*	<0.01*
	06/14/17	8260B	0.6	0.087	<0.01*	<0.01*	0.41	0.19	0.23	<0.1		<0.1					<0.01			<0.01	<0.01*		0.03	0.0042		<0.03*	0.01	0.081	0.005	<0.01		<0.01*		<0.01	<0.01*	<0.01*	<0.01*
	03/15/17	8260B	0.66	0.098	<0.02*	<0.02*	0.43	0.17	0.2	<0.2		<0.2					<0.02			<0.02	<0.02*		0.024	0.0058		<0.06*	0.011	0.054	0.0052	<0.02		<0.02*		<0.02	<0.02*	<0.02*	<0.02*
	11/08/16	8260B	0.63	0.11	0.007	<0.02*	0.51	0.22	0.26	<0.2		<0.2					<0.02			<0.02	<0.02*		0.032	0.0062		<0.06*	0.014	0.084	0.0088	<0.02		<0.02*		<0.02	<0.02*	<0.02*	<0.02*
	09/13/16	8260B	0.62	0.1	<0.02*	<0.02*	0.45	0.18	0.25	<0.2		<0.2					<0.02			<0.01	<0.01*		0.035	0.0069		<0.06*	0.014	0.085	0.009	0.0033		<0.02*		<0.02	<0.02*	<0.02*	<0.02*
	06/10/16	8260B	0.58	0.079	<0.01*	<0.01*	0.41	0.15	0.21	<0.1		<0.1					<0.01			<0.1*	<0.1*		0.034	0.0054		<0.03*	0.017	0.09	0.0065			<0.01*		<0.01	<0.01*	<0.01*	<0.01*
	02/25/16	8260B	0.68	0.082	<0.02*	<0.02*	0.55	0.25	0.35	<0.2		<0.2					<0.02			<0.02	<0.02*		0.033	0.0059		0.0056	0.017	0.099	0.0075			<0.02*		<0.02	<0.02*	<0.02*	<0.02*
	11/03/15	8260B	0.53	0.094	<0.01*		0.43	0.17	0.27	<0.1		<0.1					<0.01			<0.01	<0.01*		0.026	<0.01			<0.03	0.073	<0.01			<0.01*		<0.01	<0.01*	<0.01*	<0.01*
	08/18/15	8260B	0.52	0.073	<0.01*		0.49	0.23	0.38	<0.1		<0.1					<0.01			<0.01	<0.01*		0.031	<0.01			<0.03	0.08	<0.01			<0.01*		<0.01	<0.01*	<0.01*	<0.01*
	06/08/15	8260B	0.42	0.055	<0.01*		0.34	0.15	0.23	<0.1		<0.1					<0.01			<0.01	<0.01*		0.029	<0.01			<0.03	0.062	<0.01			<0.01*		<0.01	<0.01*	<0.01*	<0.01*
	03/12/15	8260B	0.39	0.047	<0.01*		0.38	0.17	0.25	<0.1		<0.1					<0.01			<0.01	<0.01*		0.018	<0.01			<0.03	0.037	<0.01			<0.01*		<0.01	<0.01*	<0.01*	<0.01*
	11/18/14	8260B	0.83	0.11	<0.05*		0.58	0.41	0.54	<0.5		<0.5					<0.05			<0.05*	<0.05*		<0.05	<0.05			<0.15	0.11	<0.05			<0.05*		<0.05	<0.05*	<0.05*	<0.05*
	09/24/14	8260B	0.69	0.11	<0.05*		0.5	0.22	0.36	<0.5		<0.5					<0.5*			<0.05*	<0.05*		<0.05	<0.05			<0.15	0.1	<0.05			<0.05*		<0.05	<0.05*	<0.05*	<0.05*
	04/09/14	8260B	0.59	0.099	<0.05*		0.43	<0.2*	0.3	<0.5		<0.5					<0.05			<0.05*	<0.05*		<0.05	<0.05			<0.15	0.086	<0.05			<0.05*		<0.05	<0.05*	<0.05*	<0.05*
MKTF-20	11/05/19	8260B	0.19	0.031	<0.01*	<0.01*	0.037	0.0096	0.0091	0.033		<0.1					<0.01			<0.01	<0.01*	<0.1*	0.0085	<0.1	<0.1	<0.3*	0.0028	0.018	<0.01			<0.01*		<0.01	<0.01*	<0.01*	<0.01*
	08/21/19	8260B	1.1	0.2	<0.01*	<0.01*	0.29	0.055	0.062	<0.1		0.092					<0.01			<0.01	<0.01*	<0.1*	0.0093	0.0049	<0.1	<0.03*	0.013	0.017	0.004			<0.01*		<0.01	<0.01*	<0.01*	<0.01*
	05/14/19	8260B	0.84	0.23	<0.01*	<0.01*	0.26	0.053	0.052	<0.1		<0.1					<0.01			<0.01	<0.01*	<0.1*	0.0032	<0.01	<0.1	<0.03*	<0.03	0.0039	<0.01			<0.01*		<0.01	<0.01*	<0.01*	<0.01*
	02/20/19	8260B	0.16	0.031	<0.01*	<0.01*	0.024	0.0045	0.0044	<0.1		<0.1					<0.01			<0.01	<0.01*	<0.1*	0.0063	<0.01	0.04	<0.03*	<0.03	0.013	<0.01			<0.01*		<0.01	<0.01*	<0.01*	<0.01*
	11/29/18	8260B	0.53	0.22	<0.01*	<0.01*	0.073	0.013	0.014	<0.1		<0.1					<0.01			<0.1*	<0.1*	<1.0*	0.0037	<0.01	<0.1	<0.03*	<0.03	0.0081	<0.01			<0.01*		<0.01	<0.01*	<0.01*	<0.01*
	08/31/18	8260B	1.4	0.43	<0.1*	<0.1*	0.29	0.05	0.057	<1.0		<1.0					<0.1*			<0.1*	<0.1*	<1.0*	<0.1	<0.1	0.05	<0.3*	<0.3	0.063	<0.1			<0.1*		<0.1	<0.1*	<0.1*	<0.1*
	05/11/18	8260B	1.6	0.47	<0.05*	<0.05*	0.33	0.053	0.065	<0.5		<0.5					<0.1*			<0.05*	<0.05*	<0.5*	0.021	<0.05		<0.15*	0.015	0.064	0.0075			<0.05*		<0.05	<0.05*	<0.05*	<0.05*
	02/15/18	8260B	1.3	0.36	<0.1*	<0.1*	0.24	0.063	0.066	<1.0		<1.0					<0.1*			<0.1*	<0.1*	<1.0*	0.013	<0.1		<0.3*	0.025	0.052	<0.1			<0.1*		<0.1	<0.1*	<0.1*	<0.1*
	11/29/17	8260B	1.4	0.41	<0.1*	<0.1*	0.27	0.09	0.1	<1.0		<1.0					<0.1*			<0.1*	<0.1*	<1.0*	0.028	<0.1		<0.3*	0.032	0.057	<0.1			<0.1*		<0.1	<0.1*	<0.1*	<0.1*
	09/26/17	8260B	1.3	0.41	<0.1*	<0.1*	0.27	0.055	0.06	<1.0		<1.0					<0.1*			<0.1*	<0.1*	<1.0*	<0.1	<0.1		<0.3*	<0.3	<0.1	<0.1			<0.1*		<0.1	<0.1*	<0.1*	<0.1*
	06/12/17	8260B	1.6	0.48	<0.1*	<0.1*	0.29	0.058	0.049	<1.0		<1.0					<0.1*			<0.1*	<0.1*	<1.0*	<0.1	<0.1		<0.3*	<0.3	<0.1	<0.1			<0.1*		<0.1	<0.1*	<0.1*	<0.1*
	03/14/17	8260B	1.2	0.42	<0.1*	<0.1*	0.12	0.083	0.078	<1.0		<1.0					<0.1*			<0.1*	<0.1*	<1.0*	0.014	<0.1		<0.3*	0.019	0.037	<0.1			<0.1*		<0.1	<0.1*	<0.1*	<0.1*
	11/03/16	8260B	1.2	0.35	<0.1*	<0.1*	0.19	0.073	0.079	<1.0		<1.0					<0.1*			<0.1*	<0.1*	<1.0*	0.035	<0.1		<0.3*	<0.3	0.11	<0.1			<0.1*		<0.1	<0.1*	<0.1*	<0.1*
	09/12/16	8260B	1.3	0.41	<0.1*	<0.1*	0.23	0.053	0.062	<1.0		<1.0					<0.1*			<0.1*	<0.1*	<1.0*	0.028	<0.1		<0.3*	<0.3	0.11	<0.1			<0.1*		<0.1	<0.1*	<0.1*	<0.1*
	06/09/16	8260B	0.97	0.31	<0.01*	<0.01*	0.14	0.04	0.049	0.12		0.047					<0.01			<0.01	<0.01*	<0.1*	0.02	0.00045		<0.3*	0.02	0.058	0.00043			<0.01*		<0.01	<0.01*	<0.01*	<0.01*
	03/01/16	8260B	1.2	0.38	<0.05*	<0.05*	0.14	0.037	0.051	<0.5		<0.5					<0.05			<0.05*	<0.05*	0.053	0.018	<0.05		0.0099	0.011	0.073	<0.05			<0.05*		<0.05	<0.05*	<0.05*	<0.05*
	06/08/15	8260B	0.94	0.34	<0.05*		0.1	<0.2*	<0.2*	<0.5		<0.5					<0.5*			<0.05*	<0.05*		<0.05	<0.05			<0.15	<0.05	<0.05			<0.05*		<0.05	<0.05*	<0.05*	<0.05*
	03/16/15	8260B	1.3	0.39	<0.05*		0.21	<0.2*	<0.2*	<0.5		<0.5					<0.5*			<0.05*	<0.05*		<0.05	<0.05			<0.15	<0.05	<0.05			<0.05*		<0.05	<0.05*	<0.05*	<0.05*
	11/18/14	8260B	1.8	0.53	<0.5*		0.16	<0.2*	<0.2*	<0.5		<0.5					<0.5*			<0.5*	<0.5*		<0.05	<0.05			<0.15	0.12	<0.05			<0.05*		<0.05	<0.05*	<0.05*	<0.05*
	04/11/14	8260B	1.9	0.5	<0.05*		0.3	<0.2*	<0.2*	<0.5		<0.05					<0.05			<0.05*	<0.05*		0.076	<0.05			<0.15	0.26	<0.05			<0.05*		<0.05	<0.05*	<0.05*	<0.05*

8.17.5 MKTF WELLS
Volatile Organic Compounds Analytical Results

			PARAMETERS																																		
		STANDARDS	1,2,4-Trimethylbenzene (mg/L)	1,3,5-Trimethylbenzene (mg/L)	1,2-Dichloroethane (EDC) (mg/L)	1,2-Dibromoethane (EDB) (mg/L)	Naphthalene (mg/L)	1-Methylnaphthalene (mg/L)	2-Methylnaphthalene (mg/L)	Acetone (mg/L)	Bromomethane (mg/L)	(Methyl ethyl ketone) 2-Butanone (mg/L)	Chlorobenzene (mg/L)	Chloroethane (mg/L)	Chloroform (mg/L)	Chloromethane (mg/L)	cis-1,2-DCE (mg/L)	1,2-Dichlorobenzene (mg/L)	1,4-Dichlorobenzene (mg/L)	1,1-Dichloroethane (mg/L)	1,1-Dichloroethene (mg/L)	1,2-Dichloropropane (mg/L)	2-Hexanone (mg/L)	Isopropylbenzene (mg/L)	4-Isopropyltoluene (mg/L)	4-Methyl-2-pentanone (mg/L)	Methylene Chloride (mg/L)	n-Butylbenzene (mg/L)	n-Propylbenzene (mg/L)	sec-Butylbenzene (mg/L)	Styrene (mg/L)	tert-Butylbenzene (mg/L)	Tetrachloroethene (PCE) (mg/L)	1,2,4-Trichlorobenzene (mg/L)	1,1,1-Trichloroethane (mg/L)	1,1,2-Trichloroethane (mg/L)	Trichloroethene (TCE) (mg/L)	Vinyl Chloride (mg/L)
		WQCC 20 NMAC 6.2.3103 (DEC 2018)	NE	NE	0.005	0.00005	0.03	NE	NE	NE	NE	NE	NE	NE	0.1	NE	0.07	0.6	0.075	0.025	0.007	0.005	NE	NE	NE	NE	0.005	NE	NE	NE	0.1	NE	0.005	0.07	0.2	0.005	0.005	0.002
		40 CFR 141.61 MCL	NE	NE	0.005	0.00005	NE	NE	NE	NE	NE	NE	NE	NE	NE	NE	0.07	NE	0.075	NE	0.007	0.005	NE	NE	NE	NE	0.005	NE	NE	NE	0.1	NE	0.005	0.07	0.2	0.005	0.005	0.002
		NMED Tap Water (JUNE 2019)	NE	NE	0.0017	0.0000747	0.00165	0.0114	0.035	14.06	0.0075	5.56	0.0776	20.86	0.00229	0.0203	0.0365	NE	0.0048	0.0275	0.284	0.00437	NE	0.447	NE	1.24	0.106	NE	NE	NE	1.21	NE	NE	0.00398	8	0.00042	0.00259	0.00032
		EPA RSL for Tap Water (NOVEMBER 2019)	0.056	0.06	0.00017	0.0000075	0.00017	0.0011	0.036	14	0.0075	5.6	0.078	21	0.00022	0.19	0.036	0.3	0.00048	0.0028	0.28	0.00085	0.038	NE	NE	6.3	0.011	1	0.66	2	1.2	0.69	0.011	0.0012	8	0.00028	0.00049	0.000019
Well ID	DATE SAMPLED	METHOD																																			
MKTF-21	11/05/19	8260B	1.1	0.026	<0.02*	<0.02*	0.27	0.049	0.051	<0.2		<0.2					<0.02			<0.02	<0.02*		<0.2*	0.012	0.0044	<0.2	<0.06*	0.0065	0.032	<0.02			<0.02*		<0.02	<0.02*	<0.02*	<0.02*
	08/22/19	8260B	0.36	0.095	<0.02*	<0.02*	0.088	0.018	0.02	<0.2		<0.2					<0.02			<0.02	<0.02*		<0.2*	0.018	<0.02	0.019	<0.06*	<0.06	0.035	<0.02			<0.02*		<0.02	<0.02*	<0.02*	<0.02*
	05/14/19	8260B	0.15	0.036	<0.02*	<0.02*	0.033	0.0069	<0.08*	<0.2		<0.2					<0.02			<0.02	<0.02*		<0.2*	0.0059	<0.02	<0.2	<0.06*	<0.06	0.012	<0.02			<0.02*		<0.02	<0.02*	<0.02*	<0.02*
	02/20/19	8260B	1.5	0.59	<0.02*	<0.02*	0.32	0.074	0.08	<0.2		<0.2					<0.02			<0.02	<0.02*		<0.2*	0.011	0.006	<0.2	<0.006*	0.016	0.027	0.0065			<0.02*		<0.02	<0.02*	<0.02*	<0.02*
	11/29/18	8260B	0.099	0.03	<0.02*	<0.02*	0.013	<0.08*	<0.08*	<0.2		<0.2					<0.02			<0.02	<0.02*		<0.2*	0.0048	<0.02	<0.02	<0.06*	<0.06	0.0083	<0.02			<0.02*		<0.02	<0.02*	<0.02*	<0.02*
	08/31/18	8260B	0.37	0.1	<0.02*	<0.02*	0.09	0.012	0.012	0.072		<0.2					<0.02			<0.02	<0.02*		<0.2*	0.02	<0.02	0.018	<0.06*	0.0053	0.042	<0.02			<0.02*		<0.02	<0.02*	<0.02*	<0.02*
	05/11/18	8260B	0.31	0.062	<0.01*	<0.01*	0.057	0.011	0.011	<0.1		0.048					<0.01			<0.01	<0.01*		<0.1*	0.011	<0.01	0.014	<0.03*	0.0022	0.021	0.0013			<0.01*		<0.01	<0.01*	<0.01*	<0.01*
	02/15/18	8260B	0.22	0.046	<0.02*	<0.02*	0.043	0.013	0.013	0.052		<0.2					<0.02			<0.02	<0.02*		0.017	0.0074	<0.02	0.023	<0.06*	0.0049	0.015	<0.02			<0.02*		<0.02	<0.02*	<0.02*	<0.02*
	11/28/17	8260B	0.29	0.097	<0.05*	<0.05*	0.061	<0.2*	<0.2*	<0.5		<0.5					<0.05			<0.05*	<0.05*		<0.5*	0.018	<0.05	<0.5	<0.15*	<0.15	0.029	<0.05			<0.05*		<0.05	<0.05*	<0.05*	<0.05*
	09/26/17	8260B	0.29	0.089	<0.05*	<0.05*	0.045	0.016	0.018	<0.5		<0.5					<0.05			<0.05*	<0.05*		<0.5*	0.018	<0.05	<0.5	<0.15*	<0.15	0.033	<0.05			<0.05*		<0.05	<0.05*	<0.05*	<0.05*
	06/21/17	8260B	0.34	0.12	<0.05*	<0.05*	0.045	<0.2*	<0.2*	<0.5		<0.5					<0.05			<0.05*	<0.05*		<0.5*	0.019	<0.05	<0.5	<0.15*	<0.15	0.031	<0.05			<0.05*		<0.05	<0.05*	<0.05*	<0.05*
	03/14/17	8260B	0.26	0.096	<0.05*	<0.05*	0.032	0.02	0.021	<0.5		<0.5					<0.05			<0.05*	<0.05*		<0.5*	0.013	<0.05	<0.5	<0.15*	<0.15	0.02	<0.05			<0.05*		<0.05	<0.05*	<0.05*	<0.05*
	11/03/16	8260B	0.23	0.096	<0.05*	<0.05*	0.047	<0.2*	<0.2*	<0.5		<0.5					<0.05			<0.05*	<0.05*		<0.5*	0.0085	<0.05	0.032	<0.15*	<0.15	0.019	<0.05			<0.05*		<0.05	<0.05*	<0.05*	<0.05*
	09/12/16	8260B	0.24	0.11	<0.05*	<0.05*	0.03	0.015	0.014	<0.5		<0.5					<0.05			<0.05*	<0.05*		<0.5*	0.0082	<0.05	0.048	<0.15*	<0.15	0.021	<0.05			<0.05*		<0.05	<0.05*	<0.05*	<0.05*
	06/09/16	8260B	0.14	0.066	<0.01*	<0.01*	0.019	0.01	0.012	0.17		0.11					<0.01			<0.01	<0.01*		<0.1*	0.0074	<0.01	0.043	<0.15*	0.0066	0.013	0.0016			<0.01*		<0.01	<0.01*	<0.01*	<0.01*
	03/01/16	8260B	0.14	0.067	<0.01*	<0.01*	0.016	0.0067	0.0072	<0.1		<0.1					<0.01			<0.01	<0.01*		0.026	0.0027	<0.01	0.05	0.002	0.0017	0.0069	<0.01			<0.01*		<0.01	<0.1*	<0.01*	<0.01*
	06/10/15	8260B	0.11	0.047	<0.01*		<0.02	<0.04*	<0.04*	<0.1		<0.1					<0.01			<0.01	<0.01*			<0.01	<0.01			<0.03	0.015	<0.01			<0.01*		<0.01	<0.01*	<0.01*	<0.01*
	03/16/15	8260B	0.11	0.051	<0.01*		<0.02	<0.04*	<0.04*	<0.1		<0.1					<0.1*			<0.01	<0.01*			<0.01	<0.01			<0.03	0.016	<0.01			<0.01*		<0.01	<0.01*	<0.01*	<0.01*
	04/11/14	8260B	2.2	0.6	<0.05*		0.49	<0.2*	<0.2*	<0.5		<0.5					<0.5*			<0.05*	<0.05*			0.1	<0.05			<0.15	0.38	<0.05			<0.05*		<0.05	<0.05*	<0.05*	<0.05*
MKTF-22	10/24/19	8260B/8011/504.1	<0.02	<0.02	<0.02*	<0.0000093	0.0077	0.035	<0.08*	<0.2		<0.2					<0.02			0.013	0.013			0.013	<0.02		<0.06*	0.005	0.027	<0.02	<0.02		<0.02*	<0.02	<0.02	<0.02*	<0.02*	<0.02*
	08/20/19	8260B/8011/504.1	<0.02	<0.02	<0.02*	<0.0000093	0.013	0.034	<0.08*	<0.2		<0.2					0.0089			0.013	0.017			0.016	0.0062		<0.06*	0.023	0.029	0.0078	<0.02		<0.02*	<0.02	<0.02	<0.02*	<0.02*	<0.02*
	05/09/19	8260B/8011/504.1	0.0063	<0.02	<0.02*	<0.0000093	0.015	0.07	<0.08*	<0.2		<0.2					0.012			0.011	0.015			0.015	<0.02		<0.06*	0.0093	0.035	0.006	<0.02		<0.02*	<0.02	<0.02	<0.02*	<0.02*	<0.02*
	03/26/19	8260B	0.0051	<0.02	<0.02*	<0.02*	0.0088	0.38	<0.08*	<0.2		<0.2					0.0098			0.01	0.014			0.0065	<0.02		<0.06*	<0.06	0.016	<0.02	<0.02		<0.02*	<0.02	<0.02	<0.02*	<0.02*	<0.02*
	11/28/18	8260B	<0.02	<0.02	<0.02*	<0.02*	0.015	0.041	<0.08*	<0.2		<0.2					0.011			<0.02	0.014			0.0077	<0.02		<0.06*	<0.06	0.014	<0.02	<0.02		<0.02*	<0.02	<0.02	<0.02*	<0.02*	<0.02*
	08/30/18	8260b	<0.02	<0.02	<0.02*	<0.02*	0.014	0.042	<0.08*	<0.2		<0.2					0.008			<0.02	0.0081			0.0058	<0.02		<0.06*	<0.06	0.013	<0.02	<0.02		<0.02*	<0.02	<0.02	<0.02*	<0.02*	<0.02*
	05/10/18	8260B	0.0047	<0.01	<0.01*	<0.01*	0.016	0.053	0.0045	<0.1		<0.1					0.0097			<0.01	0.0082			0.0085	0.002		<0.03*	0.0086	0.018	0.0048	<0.01		<0.01*	<0.01	<0.01	<0.01*	<0.01*	<0.01*
	02/08/18	8260B	0.0056	0.0011	<0.01*	<0.01*	0.019	0.046	0.0058	<0.1		<0.1					0.0078			<0.01	0.0068			0.007	0.0025		<0.03*	0.0081	0.014	0.004	<0.01		<0.01*	<0.01	<0.01	<0.01*	<0.01*	<0.01*
	11/28/17	8260B	0.0094	0.0017	<0.01*	<0.01*	0.033	0.089	0.0086	0.023		<0.1					0.008			<0.01	0.0062			0.01	0.0036		<0.03*	0.011	0.023	0.0061	<0.01		<0.01*	<0.01	<0.01	<0.01*	<0.01*	<0.01*
	10/03/17	8260B	0.015	<0.01	<0.01*	<0.01*	0.059	0.1	0.01	<0.1		<0.1					0.0061			0.0041	0.0051			0.015	0.0023		0.0033	0.013	0.042	0.0066	<0.01		<0.01*	<0.01	<0.01	<0.01*	<0.01*	<0.01*
	06/08/17	8260B	0.004	0.0014	<0.01*	<0.01*	0.032	0.058	0.0071	0.021		<0.1					0.0094			<0.01	0.009			0.0064	0.0017			0.0051	0.013	0.0027	<0.01		<0.01*	<0.01	<0.01	<0.01*	<0.01*	<0.01*
	03/08/17	8260B	0.012	0.0022	<0.01*	<0.01*	0.07	0.09	0.016	0.034		<0.1					0.0083			0.0017	0.0086			0.019	0.0032			0.015	0.05	0.0076	<0.01		<0.01*	<0.01	<0.01	<0.01*	<0.01*	<0.01*
	11/01/16	8260B	0.015	0.0019	<0.01*	<0.01*	0.07	0.094	0.016	<1.0		<1.0					0.0066			<0.01	0.0068			0.018	0.0041			0.013	0.044	0.0078	0.0021		<0.01*	0.003	<0.01	<0.01*	<0.01*	<0.01*
	09/10/16	8260B	0.015	<0.02	<0.02*	<0.02*	0.078	0.088	0.014	<0.2		<0.2					0.011			<0.02	0.0094			0.018	<0.02			0.0085	0.043	0.0042			<0.02*		<0.02	<0.02*	<0.02*	<0.02*
	06/10/16	8260B	0.025	0.0017	<0.01*	<0.01*	0.073	0.088	0.016	0.082		0.031					0.008			<0.01	0.0069			0.021	0.0038			0.014	0.051	0.0074			<0.01*		<0.01	<0.01*	<0.01*	<0.01*
	02/25/16	8260B	0.043	<0.02	0.003	<0.02*	0.073	0.11	0.017	<0.2		<0.2					0.0077			<0.02	0.004			0.02	0.0037			0.013	0.05	0.0071			<0.02*		<0.02	<0.02*	<0.02*	<0.02*
	11/09/15	8260B	0.029	<0.02	<0.02*		<0.04*	<0.08*	<0.08*	<0.2		<0.2					<0.02			<0.02	<0.2*			<0.02	<0.02			<0.06	0.032	<0.02			<0.02*		<0.02	<0.02*	<0.02*	<0.02*
	08/20/15	8260B	<0.02	<0.02	<0.02*		<0.04*	<0.08*	<0.08*	<0.2		<0.2					<0.02			<0.02	<0.02*			<0.02	<0.02			<0.06	<0.02	<0.02			<0.02*		<0.02	<0.02*	<0.02*	<0.02*
	06/09/15	8260B	0.053	<0.02	<0.02*		<0.04*	0.08	<0.08*	<0.2		<0.2					<0.02			<0.02	<0.02*			<0.02	<0.02			<0.06	0.033	<0.02			<0.02*		<0.02	<0.02*	<0.02*	<0.02*
	03/12/15	8260B	0.058	<0.02	<0.02*		<0.04*	0.099	<0.08*	<0.2		<0.2					<0.02			<0.02	<0.02*			<0.02	<0.02			<0.06	0.031	<0.02			<0.02*		<0.02	<0.02*	<0.02*	<0.02*
	11/17/14	8260B	<0.01	<0.01	<0.01*		<0.02	0.058	<0.04*	<0.1		<0.1					0.01			0.015	<0.01*			<0.01	<0.01			<0.03	0.013	<0.01			<0.01*		<0.01	<0.01*	<0.01*	<0.01*
	04/10/14	8260B	0.089	<0.01	<0.01*		<0.02	0.048	<0.04*	<0.1		<0.1					<0.01			<0.01	<0.01*			0.015	<0.01			<0.03	0.033	<0.01			<0.01*		<0.01	<0.01*	<0.01*	<0.01*
MKTF-23	10/29/19	8260B/8011/504.1/EDB	0.91	0.26	<0.1*	<0.0000093	0.26	0.099	0.12	<1.0		<1.0					<0.1*			0.061	0.042			0.034	<0.1			<0.3	0.1	<0.1			<0.1*		0.018	<0.1*	<0.1*	0.053
	08/20/19	--	SPH Detected - No samples were collected.																																		
	05/09/19	--	SPH Detected - No samples were collected.																																		
	03/26/19	8260B/8011/504.1	1.1	0.33	<0.1*	<0.0000093	0.25	0.094	0.11	<1.0		<1.0					0.024			0.05	0.037			0.28	<0.1			<0.3	0.081	<0.1			<0.1*		<0.1	<0.1*	<0.1*	0.048
	06/10/16	8260B	1.5	0.52	<0.01*		0.28	0.14	0.19	<0.1		<0.1					0.034			0.096	0.056			0.033	0.02			0.074	0.065	0.022			0.0015		0.016	<0.01*	0.0043	<0.01*
	02/25/16	8260B	1.3	0.35	0.0053		0.24	0.085	0.11	0.042		<0.2					0.036			0.11	0.058			0.029	0.0097			0.017	0.048	0.01			<0.02*		0.014	<0.02*	<0.02*	<0.02*
	11/09/15	8260B	1.4	0.38	<0.02*		0.39	0.14	0.21	<0.2		<0.2					0.049			0.11	0.049			0.048	<0.02			<0.06	0.092	<0.02			<0.02*		0.027	<0.02*	<0.02*	<0.02*
	08/21/15	8260B	0.92	0.24	<0.02*		0.16	<0.08*	<0.08*	<0.2		<0.2					0.045			0.13	0.054			0.029	<0.02			<0.06	0.054	<0.02			<0.02*		0.031	<0.02*	<0.02*	<0.02*
	06/09/15	8260B	1.1	0.28	<0.01*		0.22	0.079	0.12	<0.1		<0.1					0.042			0.13	0.062			0.41	<0.01			<0.03	0.073	0.01			<0.01*		0.034	<0.01*	<0.01*	<0.01*
	03/12/15	8260B	1.4	0.38	<0.01*		0.3	0.097	0.14	<0.1		<0.1					0.055			0.12	0.053			0.044	<0.01			<0.03	0.093	0.01			<0.01*		0.049	<0.01*	<0.01*	<0.01*
	11/17/14	8260B	0.89	0.22	<0.01*		0.15	0.074	0.11	<0.1		<0.1					0.043			0.15	0.064			0.034	<0.01			<0.03	0.066	<0.01			<0.01*		0.024	<0.01*	<0.01*	0.022
	09/23/14	8260B	0.54	0.15	<0.01*		0.1	<0.04*	0.041	<0.1		<0.1					0.029			0.092	0.047			0.026	<0.01			<0.03	0.058	<0.01			<0.01*		0.024	<0.01*	<0.01*	<0.01*
MKTF-24	10/23/19	8260B/8011/504.1/EDB	0.0053	<0.02	0.0093	0.0037	<0.04*	0.0011	<0.08*	<0.2	<0.06*	<0.2		<0.04			<0.02			0.033	0.011			0.032	<0.02			0.011	0.064	0.0074			<0.01*		<0.01	<0.01*	<0.01*	0.037
	08/23/19	8260B/8011/504.1	<0.02	<0.02	<0.02*	0.0000047	<0.04*	0.017	<0.08*	<0.2	<0.06*	<0.2		0.019			0.0086			0.053	0.019			0.033	<0.02			0.027	0.064	0.01			<0.02*		<0.02	<0.02*	<0.02*	0.038
	05/06/19	8260B/8011/504.1	0.0047	<0.02	0.0066	0.0000012	<0.04*	<0.08*	<0.08*	<0.2	<0.06*	<0.2		<0.04			<0.02			0.047	0.014			0.019	<0.02			0.0046	0.036	<0.2			<0.01*		<0.01	<0.01*	<0.01*	0.022
	02/25/19	--	Well not sampled.																																		
	11/18/18	8260B/8011/504.1	<0.02	<0.02	<0.02*	0.0000008	<0.04*	0.0076	<0.08*	<0.2	<0.06*	<0.2		0.0057			0.0093			0.076	0.019			0.018	<0.02			0.0067	0.031	0.0042			<0.01*		<0.01	<0.01*	<0.01*	0.028
	08/20/18	8260B/8011/504.1	<0.02	<0.02	0.0082	0.0000058	<0.04*	<0.08*	<0.08*	<0.2	<0.06*	<0.2		<0.04			0.011			0.074	0.022			0.035	<0.02			0.013	0.089	0.0064			<0.02*		<0.02	<0.02*	<0.02*	0.032
	05/01/18	8260B/8011/504.1	<0.02	<0.02	0.0083	0.0000057	0.0071	0.01	<0.08*	<0.2	<0.06*	<0.2		<0.04			0.022			0.066	0.016			0.036	0.002			0.012	0.076	0.0082			<0.02*		<0.02	<0.02*	<0.02*	0.031
	02/06/18	8260B/8011/504.1	0.0024	0.0042	<0.02*	<0.0095*	0.012	0.017	<0.08*	<0.2	<0.02*	<0.2		0.0056			0.017			0.082	0.027			0.043	0.0041			0.019	0.095	0.011			<0.02*		<0.02	<0.02*	<0.02*	0.037
	11/20/17	8260B	0.0039	0.0022	0.0056	<0.01*	0.0057	0.0081	<0.04*	0.016	<0.03*	<0.1					0.019			0.072	0.024			0.042	0.0015			0.014	0.091	0.0079			<0.01*		<0.01	<0.01*	<0.01*	0.031
	10/03/17	8260B	<0.02	<0.02	0.0099	<0.02*	<0.04*	<0.08*	<0.08*	<0.2	<0.06*	<0.2					0.018			0.072	0.035			0.019	<0.02			0.0046	0.034	0.0031			<0.02*		0.0043	<0.02*	<0.02*	0.018
	06/05/17	8260B/8011/504.1	0.0042	0.0026	<0.02*	<0.02*	0.0094	0.011	<0.08*	<0.2	<0.06*	<0.2					0.029			0.088	0.039			0.035	0.0027			0.015	0.089	0.0088			<0.02*		<0.02	<0.02*	<0.02*	0.027
	03/29/17	8260B	<0.02	<0.02	0.01	<0.02*	<0.04*	<0.08*	<0.08*	<0.2	<0.06*	<0.2					0.022			0.079	0.035			0.01	<0.02			<0.06	0.018	0.0069			<0.02*		0.0031	<0.02*	<0.02*	0.016
	10/28/16	8260B	0.01	<0.02	0.0079	<0.02*	<0.04*	0.0052	<0.08*	<0.2		<0.2					0.035			0.088	0.045			0.039	<0.02			0.017	0.093	0.012			<0.02*		<0.02	<0.02*	<0.02*	<0.02*
	09/07/16	8260B/8011/504.1	0.0093	<0.02	<0.02*	0.031	<0.04*	0.0093	<0.08*	<0.2		<0.2					0.027			0.094	0.042			0.035	<0.02			0.015	0.065	0.011			<0.02*		0.0035	<0.02*	<0.02*	<0.02*
	06/08/16	8260B	0.0032	0.00075	<0.005*	<0.005*	0.004	0.0038	<0.02	0.044		0.012					0.028			0.092	0.046			0.013	<0.005			0.0042	0.022	0.0032			<0.005*		0.0036	0.0014	0.0043	0.0049
	02/22/16	8260B	0.0072	<0.02	0.0081	<0.02*	0.014	0.011	<0.08*	<0.2		<0.2					0.032			0.093	0.051			0.037	<0.02			0.014	0.094	<0.02			<0.02*		<0.02	<0.02*	<0.02*	<0.02*
	11/04/15	8260B	<0.02	<0.02	<0.02*		<0.04*	<0.08*	<0.08*	<0.2		<0.2					0.034			0.12	0.046			<0.02	<0.02			<0.06	0.033	<0.02			<0.02*		<0.02	<0.02*	<0.02*	<0.02*
	08/20/15	8260B	<0.02	<0.02	<0.02*		<0.04*	<0.08*	<0.08*	<0.2		<0.2					0.028			0.11	0.049			<0.02	<0.02			<0.06	0.028	<0.02			<0.02*		<0.02	<0.02*	<0.02*	<0.02*
	06/10/15	8260B	<0.005	<0.005	0.0083		<0.01	<0.02*	<0.02	<0.05		<0.05					0.036			0.12	0.058			0.011	<0.005			<0.015	0.016	<0.005			<0.005*		0.011	<0.005*	<0.005*	<0.005*
	03/11/15	8260B	<0.005	<0.005	0.007		<0.01	<0.02*	<0.02	<0.05		<0.05					0.035			0.1	0.051			0.016	<0.005			<0.015	0.024	<0.005			<0.005*		0.01	<0.005*	<0.005*	<0.005*
	11/14/14	8260B	0.0027	<0.001	0.0096		<0.002	0.0046	<0.004	<0.01		<0.01					0.039			0.15	0.058			0.018	<0.001			0.0058	0.028	0.004			<0.001		0.0046	0.0011	0.0049	0.014
	09/24/14	8260B	0.0023	<0.002	0.0098		<0.004	<0.008	<0.008	<0.02		<0.02					0.044			0.14	0.067			0.024	<0.002			0.0087	0.039	0.0065			<0.002		<0.002	<0.002	0.005	<0.003*
	04/08/14	8260B	<0.001	<0.001	0.014		<0.002	<0.004	<0.004	<0.01		<0.01					0.057			0.2	0.088			0.02	<0.001			0.0091	0.038	0.005			0.0019		0.021	0.0014	0.0052	<0.001

8.17.5 MKTF WELLS

Volatile Organic Compounds Analytical Results

			PARAMETERS																																		
STANDARDS			1,2,4-Trimethyl benzene (mg/L)	1,3,5-Trimethyl benzene (mg/L)	1,2-Dichloro ethane (EDC) (mg/L)	1,2-Dibro moethane (EDB) (mg/L)	Naphtha-lene (mg/L)	1-Methyl naphtha-lene (mg/L)	2-Methyl naphtha-lene (mg/L)	Acetone (mg/L)	Bromo methane (mg/L)	(Methyl ethyl ketone) 2-Butanone (mg/L)	Chloro benzene (mg/L)	Chloro-ethane (mg/L)	Chloro-form (mg/L)	Chloro-methane (mg/L)	cis-1,2-DCE (mg/L)	1,2-Dichloro benzene (mg/L)	1,4-Dichloro benzene (mg/L)	1,1-Dichloro ethane (mg/L)	1,1-Dichloro ethene (mg/L)	1,2-Dichloro propane (mg/L)	2-Hexanone (mg/L)	Isopropyl benzene (mg/L)	4-Isopropyl toluene (mg/L)	4-Methyl-2-pen-tanone (mg/L)	Methylene Chloride (mg/L)	n-Butyl benzene (mg/L)	n-Propyl benzene (mg/L)	sec-Butyl benzene (mg/L)	Styrene (mg/L)	tert-Butyl benzene (mg/L)	Tetra-chloro ethene (PCE) (mg/L)	1,2,4-Trichloro-benzene (mg/L)	1,1,1-Trichloro ethane (mg/L)	1,1,2-Trichloro ethane (mg/L)	Trichloro ethene (TCE) (mg/L)	Vinyl Chloride (mg/L)
WQCC 20 NMAC 6.2.3103 (DEC 2018)			NE	NE	0.005	0.00005	0.03	NE	NE	NE	NE	NE	NE	NE	0.1	NE	0.07	0.6	0.075	0.025	0.007	0.005	NE	NE	NE	NE	0.005	NE	NE	NE	0.1	NE	0.005	0.07	0.2	0.005	0.005	0.002
40 CFR 141.61 MCL			NE	NE	0.005	0.00005	NE	NE	NE	NE	NE	NE	NE	NE	NE	NE	0.07	NE	0.075	NE	0.007	0.005	NE	NE	NE	NE	0.005	NE	NE	NE	0.1	NE	0.005	0.07	0.2	0.005	0.005	0.002
NMED Tap Water (JUNE 2019)			NE	NE	0.0017	0.0000747	0.00165	0.0114	0.035	14.06	0.0075	5.56	0.0776	20.86	0.00229	0.0203	0.0365	NE	0.0048	0.0275	0.284	0.00437	NE	0.447	NE	1.24	0.106	NE	NE	NE	1.21	NE	NE	0.00398	8	0.00042	0.00259	0.00032
EPA RSL for Tap Water (NOVEMBER 2019)			0.056	0.06	0.00017	0.0000075	0.00017	0.0011	0.036	14	0.0075	5.6	0.078	21	0.00022	0.19	0.036	0.3	0.00048	0.0028	0.28	0.00085	0.038	NE	NE	6.3	0.011	1	0.66	2	1.2	0.69	0.011	0.0012	8	0.00028	0.00049	0.000019
Well ID	DATE SAMPLED	METHOD																																			
MKTF-25	10/23/19	8260B/8011/504.1/EDB	0.0013	<0.005	0.0091	<0.0000094	<0.01	<0.02*	<0.02	<0.05		<0.05		<0.01			0.027			0.11	0.059			0.0077	<0.005			<0.015	0.0033	<0.005	<0.005	<0.005	<0.005*	<0.005	<0.005	0.0015	0.011	0.0033
	08/27/19	8260B/8011/504.1	<0.005	<0.005	0.01	<0.0000095	<0.01	<0.02*	<0.02	0.014		<0.05		<0.01			0.025			0.13	0.052			0.002	<0.005			0.0045	0.0014	<0.005	<0.005	<0.005	0.0016	<0.005	<0.005	<0.005*	0.013	<0.005*
	05/06/19	8260B/8011/504.1	0.0023	<0.01	0.0061	<0.0000093	<0.02	<0.04*	<0.04*	<0.1		<0.1		<0.02			0.035			0.14	0.05			0.021	<0.01			0.0063	0.0057	0.0041	<0.01	<0.01	<0.01*	<0.01	0.0032	<0.01*	0.012	0.007
	02/14/19	--	Well not sampled.																																		
	11/15/18	8260B/8011/504.1	<0.01	<0.01	<0.01*	<0.0000095	<0.02	<0.04*	<0.04*	<0.1		<0.1		<0.02			0.029			0.13	0.027			0.0041	<0.01			<0.03	<0.01	<0.01	<0.01	<0.01	<0.01*	<0.01	0.002	<0.01*	0.0068	<0.01*
	08/17/18	8260B/8011/504.1	<0.01	<0.01	0.0085	<0.0000092	0.0033	<0.04*	<0.04*	<0.1		<0.1		<0.02			0.052			0.14	0.049			0.035	<0.01			0.012	0.064	0.0056	<0.01	<0.01	<0.01*	<0.01	<0.01	<0.01*	0.006	<0.01*
	05/06/18	8260B/8011/504.1	0.0046	<0.005	<0.005*	<0.0000049	0.0047	0.0059	<0.02	<0.05		<0.05		<0.01			0.053			0.23	0.11			0.057	0.0014			0.019	0.085	0.0095	<0.005	<0.005	0.0027	<0.005	0.013	<0.005*	0.026	0.04
	02/05/18	8260B/8011/504.1	0.004	0.0005	0.01	0.0000094	0.0045	0.0043	<0.02	0.025		<0.05		<0.01			0.05			0.22	0.11			0.044	0.0013			0.015	0.045	0.0069	<0.005	<0.005	0.0023	<0.005	0.014	<0.005*	0.025	0.003
	11/21/17	8260B	0.0045	<0.005	0.0097	<0.005*	0.0056	0.0037	<0.02	<0.05		<0.05		<0.01			0.047			0.21	0.094			0.048	0.00053			0.014	0.057	0.007	<0.005	<0.005	0.0019	<0.005	0.016	0.0012	0.021	0.0032
	09/25/17	8260B	0.0035	0.0012	<0.001	<0.001*	0.0079	0.0038	<0.004	<0.01		<0.01		0.00046			0.052			0.24	0.11			0.046	0.00089			0.015	0.057	0.0075	0.00017	0.00012	0.0023	<0.001	0.02	0.0012	0.027	0.0031
	06/05/17	8260B/8011/504.1	0.0013	<0.005	0.0064	<0.005*	0.0022	0.0031	<0.02	<0.05		<0.05					0.024			0.16	0.086			0.022	<0.005			0.0083	0.019	0.0036	<0.005	<0.005	0.00076	<0.005	0.017	0.0013	0.019	0.00096
	03/29/17	8260B	0.0014	<0.005	0.0057	<0.005*	0.0028	0.0035	<0.02	<0.05		<0.05					0.02			0.15	0.074			0.027	<0.005			0.011	0.025	0.0053	<0.005	<0.005	0.00084	<0.005	0.021	0.0013	0.017	0.0027
	11/01/16	8260B	0.0025	<0.01	0.0086	<0.01*	<0.01	<0.04*	<0.04*	<0.1		<0.1					0.044			0.22	0.088			0.023	<0.005			0.008	0.028	0.0054			0.0027		0.014	<0.01*	0.018	<0.01*
	09/09/16	8260B/8011/504.1	<0.01	<0.01	0.0079	<0.01*	<0.02	<0.04*	<0.04*	<0.1		<0.1					0.04			0.18	0.055			0.025	<0.01			0.009	0.032	0.0059			0.0021		0.0059	<0.01*	0.011	0.0059
	06/09/16	8260B	0.021	0.0017	<0.01*	<0.00001	0.019	0.0082	<0.04*	<0.1		<0.1					0.1			0.61	0.24			0.093	0.0024			0.029	0.086	0.015			0.006		0.064	<0.01*	0.064	0.0066
	02/23/16	8260B	0.003	<0.005	0.013	<0.005*	0.007	0.0045	<0.02	<0.05		<0.05					0.045			0.3	0.12			0.047	<0.005			0.016	0.055	0.0056			0.0023		0.046	0.0014	0.029	0.0034
	11/05/15	8260B	0.0056	<0.005	0.013		<0.01	<0.02*	<0.02	<0.05		<0.05					0.049			0.3	0.13			0.049	<0.005			0.016	0.044	0.0084			<0.005*		0.045	<0.005*	0.036	<0.005*
	08/21/15	8260B	0.0056	<0.005	0.012		<0.01	<0.02*	<0.02	<0.05		<0.05					0.047			0.32	0.16			0.044	<0.005			<0.015	0.057	0.0083			<0.005*		0.061	<0.005*	0.037	<0.005*
	06/10/15	8260B	0.018	<0.005	0.011		<0.01	<0.02*	<0.02	<0.05		<0.05					0.044			0.28	0.12			0.04	<0.005			<0.015	0.042	0.0061			<0.005*		0.05	<0.005*	0.029	<0.005*
	03/11/15	8260B	0.0086	<0.005	0.012		0.018	<0.02*	<0.02	<0.05		<0.05					0.055			0.28	0.14			0.037	<0.005			0.016	0.051	0.0073			<0.005*		0.053	<0.005*	0.031	<0.005*
	11/14/14	8260B	<0.005	<0.005	0.012		<0.01	<0.02*	<0.02	<0.05		<0.05					0.044			0.23	0.098			0.04	<0.005			<0.015	0.037	0.0066			<0.005*		0.023	<0.005*	0.027	0.046
	09/23/14	8260B	<0.01	<0.01	<0.01*		<0.02	<0.04*	<0.04*	<0.1		<0.1					0.046			0.25	0.1			0.038	<0.01			<0.03	0.041	<0.01			<0.01*		0.03	<0.01*	0.024	<0.01*
	04/08/14	8260B	0.0099	0.003	0.01		0.03	<0.008	<0.008	<0.02		<0.02					0.054			0.33	0.15			0.034	<0.002			0.014	0.039	0.0058			0.0033		0.076	<0.002	0.03	<0.002*
MKTF-26			SPH Detected - No samples were collected.																																		
	06/09/16	8260B	0.0016	<0.005	0.012	0.0000045	<0.01	<0.02*	<0.02	<0.05		<0.05		0.0016			0.004			0.061	0.068			0.0022	<0.005		<0.015*	<0.015	0.0015	<0.005			<0.005*		0.0012	0.0015	0.0031	0.0086
	02/22/16	8260B	<0.005	<0.005	0.011	<0.005*	<0.01	<0.02*	<0.02	<0.05		<0.05					0.0033			0.055	0.061			0.0012	<0.005		0.0011	<0.015	<0.005	<0.005			<0.005*		<0.005	0.0013	0.0023	0.0071
	11/04/15	8260B	<0.005	<0.005	0.011		<0.01	<0.02*	<0.02	<0.05		<0.05					0.0065			0.066	0.048			<0.005	<0.005			<0.015	<0.005	<0.005			<0.005*		<0.005	<0.005*	<0.005*	0.0076
	08/20/15	8260B	<0.005	<0.005	0.01		<0.01	<0.02*	<0.02	<0.05		<0.05					<0.005			0.07	0.077			<0.005	<0.005			<0.015	<0.005	<0.005			<0.005*		<0.005	<0.005*	<0.005*	0.0063
	06/10/15	8260B	<0.005	<0.005	0.0064		<0.01	<0.02*	<0.02	<0.05		<0.05					0.0069			0.064	0.036			<0.005	<0.005			<0.015	<0.005	<0.005			<0.005*		<0.005	<0.005*	<0.005*	0.0068
	03/11/15	8260B	<0.005	<0.005	<0.005*		<0.01	<0.02*	<0.02	<0.05		<0.05					0.008			0.049	0.009			<0.005	<0.005			<0.015	<0.005	<0.005			<0.005*		<0.005	<0.005*	<0.005*	<0.005*
	11/14/14	8260B	<0.005	<0.005	0.0093		<0.01	<0.02*	<0.02	<0.05		<0.05					0.011			0.083	0.043			<0.005	<0.005			<0.015	<0.005	<0.005			<0.005*		<0.005	<0.005*	<0.005*	0.017
	09/24/14	8260B	<0.001	<0.001	0.0081		<0.002	<0.004	<0.004	<0.01		<0.01					0.013			0.084	0.032			0.0073	<0.001			<0.003	0.005	0.0013			<0.001		0.0025	0.0011	0.0017	<0.001
	04/08/14	8260B	<0.001	<0.001	0.013		<0.002	<0.004	<0.004	<0.01		<0.01					0.0045			0.083	0.066			<0.001	<0.001			<0.003	<0.001	<0.001			<0.001		0.0017	0.0014	0.0029	<0.001
MKTF-27	10/23/19	8260B/8011/504.1/EDB	<0.001	<0.001	0.00053	<0.0000093	<0.002	<0.004	<0.004	0.0022		<0.01					<0.001		<0.001	0.0011	0.0004	<0.001		<0.001	<0.001			<0.003	<0.001	<0.001			<0.001		<0.001	<0.001	<0.001	<0.001
	08/21/19	8260B/8011/504.1	<0.001	<0.001	<0.001	<0.0000093	<0.002	<0.004	<0.004	0.0022		<0.01					<0.001		<0.001	0.0016	0.00047	<0.001		<0.001	<0.001			<0.003	<0.001	<0.001			<0.001		<0.001	<0.001	<0.001	<0.001
	05/06/19	8260B/8011/504.1	<0.001	<0.001	0.00033	<0.0000095	<0.002	<0.004	<0.004	0.01		<0.01					<0.001		<0.001	0.00083	0.00026	<0.001		<0.001	<0.001			<0.003	<0.001	<0.001			<0.001		<0.001	<0.001	<0.001	<0.001
	03/28/19	8260B/8011/504.1	<0.001	<0.001	<0.001	<0.0000094	<0.002	<0.004	<0.004	0.0054		<0.01					<0.001		<0.001	<0.001	<0.001	<0.001		<0.001	<0.001			<0.003	<0.001	<0.001			<0.001		<0.001	<0.001	<0.001	<0.001
	11/15/18	8260B/8011/504.1	<0.001	<0.001	0.00047	<0.0000096	<0.002	<0.004	<0.004	<0.01		<0.01					<0.001		<0.001	0.002	0.00041	<0.001		<0.001	<0.001			<0.003	<0.001	<0.001			<0.001		<0.001	<0.001	<0.001	<0.001
	08/20/18	8260B/8011/504.1	<0.001	<0.001	0.00053	<0.0000093	<0.002	<0.004	<0.004	<0.01		<0.01					<0.001		<0.001	0.0019	<0.001	<0.001		<0.001	<0.001			<0.003	<0.001	<0.001			<0.001		<0.001	<0.001	<0.001	<0.001
	05/01/18	8260B	<0.001	<0.001	0.00053	<0.001*	<0.002	<0.004	<0.004	<0.01		<0.01					<0.001		<0.001	0.0015	0.00042	<0.001		<0.001	<0.001			<0.003	<0.001	<0.001			<0.001		<0.001	<0.001	<0.001	<0.001
	02/06/18	8260B	<0.001	<0.001	0.00053	<0.001*	<0.002	<0.004	<0.004	<0.01		<0.01					0.00021		<0.001	0.0023	0.00065	<0.001		<0.001	<0.001			<0.003	<0.001	<0.001			<0.001		<0.001	<0.001	<0.001	<0.001
	11/20/17	8260B	<0.001	<0.001	0.00051	<0.001*	<0.002	0.00028	0.00026	0.0022		<0.01					<0.001		<0.001	0.0019	0.00048	0.00014		<0.001	<0.001			<0.003	<0.001	<0.001			<0.001		<0.001	<0.001	<0.001	<0.001
	10/03/17	8260B	<0.001	<0.001	0.00063	<0.001*	<0.002	<0.004	<0.004	0.0097		<0.01					0.00029		<0.001	0.0017	0.00059	<0.001		<0.001	<0.001			<0.003	<0.001	<0.001			<0.001		<0.001	<0.001	<0.001	<0.001
	06/05/17	8260B	<0.001	<0.001	<0.001	<0.001*	<0.002	<0.004	<0.004	0.0038		<0.01					<0.001		<0.001	0.0022	0.00032	<0.001		<0.001	<0.001			<0.003	<0.001	<0.001			<0.001		<0.001	<0.001	<0.001	<0.001
	03/29/17	8260B	<0.001	<0.001	0.00059	<0.001*	<0.002	<0.004	<0.004	0.0018		<0.01					<0.001		<0.001	0.0015	0.00036	<0.001		<0.001	<0.001			<0.003	<0.001	<0.001			<0.001		<0.001	<0.001	<0.001	<0.001
	10/28/16	8260B	<0.001	<0.001	0.00057	<0.001*	<0.002	<0.004	<0.04*	<0.01		<0.01					0.00019			0.0018	0.00039	0.00024		<0.001	<0.001			<0.003	<0.001	<0.001			<0.001		<0.001	<0.001	<0.001	<0.001
	09/07/16	8260B	0.00018	<0.001	0.00076	<0.001*	<0.002	<0.004	<0.004	<0.01		<0.01					0.00032			0.0017	0.00058	0.00041		<0.001	<0.001			<0.003	<0.001	0.00031			<0.001		<0.001	<0.001	<0.001	<0.001
	06/08/16	8260B	0.00049	0.00017	0.0007	<0.001*	<0.002	<0.004	<0.004	<0.01		<0.01					0.00022			0.0028	0.00074	<0.001		<0.001	<0.001			<0.003	<0.001	0.00016			<0.001		<0.001	<0.001	<0.001	<0.001
	02/22/16	8260B	<0.001	<0.001	0.00059	<0.001*	<0.002	<0.004	<0.004	<0.01		<0.01					0.00013			0.0019	0.00047	0.00019		<0.001	<0.001			<0.003	<0.001	<0.001			<0.001		<0.001	<0.001	<0.001	<0.001
	11/04/15	8260B	<0.001	<0.001	<0.001		<0.002	<0.004	<0.004	<0.01		<0.01					<0.001			0.0023	<0.001			<0.001	<0.001			<0.003	<0.001	<0.001			<0.001		<0.001	<0.001	<0.001	<0.001
	08/20/15	8260B	<0.001	<0.001	<0.001		<0.002	<0.004	<0.004	<0.01		<0.01					<0.001			0.0018	<0.001			<0.001	<0.001			<0.003	<0.001	<0.001			<0.001		<0.001	<0.001	<0.001	<0.001
	06/09/15	8260B	<0.001	<0.001	<0.001		<0.002	<0.004	<0.004	<0.01		<0.01					<0.001			0.002	<0.001			<0.001	<0.001			<0.003	<0.001	<0.001			<0.001		<0.001	<0.001	<0.001	<0.001
	03/11/15	8260B	<0.001	<0.001	<0.001		<0.002	<0.004	<0.004	<0.01		<0.01					<0.001			0.0016	<0.001			<0.001	<0.001			<0.003	<0.001	<0.001			<0.001		<0.001	<0.001	<0.001	<0.001
	11/14/14	8260B	<0.001	<0.001	<0.001		<0.002	<0.004	<0.004	<0.01		<0.01					<0.001			0.0028	<0.001			<0.001	<0.001			<0.003	<0.001	<0.001			<0.001		<0.001	<0.001	<0.001	<0.001
	09/24/14	8260B	<0.001	<0.001	<0.001		<0.002	<0.004	<0.004	<0.01		<0.01					<0.001			0.002	<0.001			<0.001	<0.001			<0.003	<0.001	<0.001			<0.001		<0.001	<0.001	<0.001	<0.001
	04/08/14	8260B	<0.002	<0.002	<0.002		<0.004	<0.008	<0.008	<0.02		<0.02					<0.002			<0.002	<0.002			<0.001	<0.002			<0.006	<0.002	<0.002			<0.001		<0.002	<0.002	<0.002	<0.001

8.17.5 MKTF WELLS

Volatile Organic Compounds Analytical Results

			PARAMETERS																																			
		STANDARDS	1,2,4-Trimethylbenzene (mg/L)	1,3,5-Trimethylbenzene (mg/L)	1,2-Dichloroethane (EDC) (mg/L)	1,2-Dibromoethane (EDB) (mg/L)	Naphthalene (mg/L)	1-Methylnaphthalene (mg/L)	2-Methylnaphthalene (mg/L)	Acetone (mg/L)	Bromomethane (mg/L)	(Methyl ethyl ketone) 2-Butanone (mg/L)	Chlorobenzene (mg/L)	Chloroethane (mg/L)	Chloroform (mg/L)	Chloromethane (mg/L)	cis-1,2-DCE (mg/L)	1,2-Dichlorobenzene (mg/L)	1,4-Dichlorobenzene (mg/L)	1,1-Dichloroethane (mg/L)	1,1-Dichloroethene (mg/L)	1,2-Dichloropropane (mg/L)	2-Hexanone (mg/L)	Isopropylbenzene (mg/L)	4-Isopropyltoluene (mg/L)	4-Methyl-2-pentanone (mg/L)	Methylene Chloride (mg/L)	n-Butylbenzene (mg/L)	n-Propylbenzene (mg/L)	sec-Butylbenzene (mg/L)	Styrene (mg/L)	tert-Butylbenzene (mg/L)	Tetrachloroethene (PCE) (mg/L)	1,2,4-Trichlorobenzene (mg/L)	1,1,1-Trichloroethane (mg/L)	1,1,2-Trichloroethane (mg/L)	Trichloroethene (TCE) (mg/L)	Vinyl Chloride (mg/L)
		WQCC 20 NMAC 6.2.3103 (DEC 2018)	NE	NE	**0.005**	**0.00005**	**0.03**	NE	NE	NE	NE	NE	NE	NE	**0.1**	NE	**0.07**	**0.6**	**0.075**	**0.025**	**0.007**	**0.005**	NE	NE	NE	NE	**0.005**	NE	NE	NE	**0.1**	NE	**0.005**	**0.07**	**0.2**	**0.005**	**0.005**	**0.002**
		40 CFR 141.61 MCL	NE	NE	0.005	0.00005	NE	NE	NE	NE	NE	NE	NE	NE	NE	NE	0.07	NE	0.075	NE	0.007	0.005	NE	NE	NE	NE	0.005	NE	NE	NE	0.1	NE	0.005	0.07	0.2	0.005	0.005	0.002
		NMED Tap Water (JUNE 2019)	NE	NE	0.0017	0.0000747	0.00165	**0.0114**	**0.035**	**14.06**	**0.0075**	**5.56**	**0.0776**	**20.86**	0.00229	**0.0203**	0.0365	NE	0.0048	0.0275	0.284	0.00437	NE	**0.447**	NE	**1.24**	0.106	NE	NE	NE	1.21	NE	NE	0.00398	8	0.00042	0.00259	0.00032
		EPA RSL for Tap Water (NOVEMBER 2019)	**0.056**	**0.06**	0.00017	0.0000075	0.00017	0.0011	0.036	14	0.0075	5.6	0.078	21	0.00022	0.19	0.036	0.3	0.00048	0.0028	0.28	0.00085	**0.038**	NE	NE	6.3	0.011	**1**	**0.66**	**2**	1.2	**0.69**	0.011	0.0012	8	0.00028	0.00049	0.000019
Well ID	**DATE SAMPLED**	**METHOD**																																				
MKTF-28	10/22/19	8260B	<0.001	<0.001	<0.001	*<0.001**	<0.002	<0.004	<0.004	<0.01	<0.003	<0.01	<0.001	<0.002	<0.001	<0.003	<0.001		<0.001	<0.001	<0.001	<0.001	<0.01	<0.001	<0.001	<0.01	<0.003	<0.003	<0.001	<0.001	<0.001	<0.001	<0.001	<0.001	<0.001	<0.001	<0.001	<0.001
	08/21/19	8260B	<0.001	<0.001	<0.001	*<0.001**	<0.002	<0.004	<0.004	<0.01	<0.003	<0.01	<0.001	<0.002	<0.001	<0.003	<0.001		<0.001	<0.001	<0.001	<0.001	<0.01	<0.001	<0.001	<0.01	<0.003	<0.003	<0.001	<0.001	<0.001	<0.001	<0.001	<0.001	<0.001	<0.001	<0.001	<0.001
	05/06/19	8260B	<0.001	<0.001	<0.001	*<0.001**	<0.002	<0.004	<0.004	0.0059	<0.003	<0.01	<0.001	<0.002	<0.001	<0.003	<0.001		<0.001	<0.001	<0.001	<0.001	<0.01	<0.001	<0.001	<0.01	<0.003	<0.003	<0.001	<0.001	<0.001	<0.001	<0.001	<0.001	<0.001	<0.001	<0.001	<0.001
	03/28/19	8260B	<0.001	<0.001	<0.001	*<0.001**	<0.002	<0.004	<0.004	0.0037	<0.003	<0.01	<0.001	<0.002	<0.001	<0.003	<0.001		<0.001	<0.001	<0.001	<0.001	<0.01	<0.001	<0.001	<0.01	<0.003	<0.003	<0.001	<0.001	<0.001	<0.001	<0.001	<0.001	<0.001	<0.001	<0.001	<0.001
	11/15/18	8260B	<0.001	<0.001	<0.001	*<0.001**	<0.002	<0.004	<0.004	<0.01	<0.003	<0.01	<0.001	<0.002	<0.001	<0.003	<0.001		<0.001	<0.001	<0.001	<0.001	<0.01	<0.001	<0.001	<0.01	<0.003	<0.003	<0.001	<0.001	<0.001	<0.001	<0.001	<0.001	<0.001	<0.001	<0.001	<0.001
	08/20/18	8260B	<0.001	<0.001	<0.001	*<0.001**	<0.002	<0.004	<0.004	<0.01	<0.003	<0.01	<0.001	<0.002	<0.001	<0.003	<0.001		<0.001	<0.001	<0.001	<0.001	<0.01	<0.001	<0.001	<0.01	<0.003	<0.003	<0.001	<0.001	<0.001	<0.001	<0.001	<0.001	<0.001	<0.001	<0.001	<0.001
	05/01/18	8260B	<0.001	<0.001	<0.001	*<0.001**	<0.002	<0.004	<0.004	0.0017	<0.003	<0.01	<0.001	<0.002	<0.001	<0.003	<0.001		<0.001	<0.001	<0.001	<0.001	<0.01	<0.001	<0.001	<0.01	<0.003	<0.003	<0.001	<0.001	<0.001	<0.001	<0.001	<0.001	<0.001	<0.001	<0.001	<0.001
	02/06/18	8260B	<0.001	<0.001	<0.001	*<0.001**	<0.002	<0.004	<0.004	<0.01	<0.003	<0.01	<0.001	<0.002	<0.001	<0.003	<0.001		<0.001	<0.001	<0.001	<0.001	<0.01	<0.001	<0.001	<0.01	<0.003	<0.003	<0.001	<0.001	<0.001	<0.001	<0.001	<0.001	<0.001	<0.001	<0.001	<0.001
	11/20/17	8260B	<0.001	<0.001	<0.001	*<0.001**	<0.002	0.00025	0.00025	0.0028	<0.003	<0.01	<0.001	<0.002	<0.001	<0.003	<0.001		<0.001	<0.001	<0.001	<0.001	<0.01	<0.001	<0.001	<0.01	<0.003	<0.003	<0.001	<0.001	<0.001	<0.001	<0.001	<0.001	<0.001	<0.001	<0.001	<0.001
	10/03/17	8260B	<0.001	<0.001	<0.001	*<0.001**	<0.002	<0.004	<0.004	0.0083	<0.003	<0.01	<0.001	<0.002	<0.001	<0.003	<0.001		<0.001	<0.001	<0.001	<0.001	<0.01	<0.001	<0.001	<0.01	<0.003	<0.003	<0.001	<0.001	<0.001	<0.001	<0.001	<0.001	<0.001	<0.001	<0.001	<0.001
	06/05/17	8260B	<0.001	<0.001	<0.001	*<0.001**	<0.002	<0.004	<0.004	0.0033	<0.003	<0.01	<0.001	<0.002	<0.001	<0.003	<0.001		<0.001	<0.001	<0.001	<0.001	<0.01	<0.001	<0.001	<0.01	<0.003	<0.003	<0.001	<0.001	<0.001	<0.001	<0.001	<0.001	<0.001	<0.001	<0.001	<0.001
	03/29/17	8260B	<0.001	<0.001	<0.001	*<0.001**	<0.002	<0.004	<0.004	0.0019	<0.003	<0.01	<0.001	<0.002	<0.001	<0.003	<0.001		<0.001	<0.001	<0.001	<0.001	<0.01	<0.001	<0.001	<0.01	<0.003	<0.003	<0.001	<0.001	<0.001	<0.001	<0.001	<0.001	<0.001	<0.001	<0.001	<0.001
	10/28/16	8260B	<0.001	<0.001	<0.001	*<0.001**	<0.002	<0.004	<0.004	<0.01		<0.01					<0.001			<0.001	<0.001			<0.001	<0.001			<0.001	<0.001	<0.001			<0.001		<0.001	<0.001	<0.001	<0.001
	09/08/16	8260B	<0.001	<0.001	<0.001	*<0.001**	<0.002	<0.004	<0.004	<0.01		<0.01					<0.001			<0.001	<0.001			<0.001	<0.001			<0.001	<0.001	<0.001			<0.001		<0.001	<0.001	<0.001	<0.001
	06/08/16	8260B	0.00019	<0.001	<0.001	*<0.001**	0.00036	0.0008	0.001	<0.01		<0.01					<0.001			<0.001	<0.001			<0.001	<0.001			<0.003	<0.001	<0.001			<0.001		<0.001	<0.001	<0.001	<0.001
	02/23/16	8260B	<0.001	<0.001	<0.001	*<0.001**	<0.002	<0.004	<0.004	<0.01		<0.01					<0.001			<0.001	<0.001			<0.001	<0.001			<0.003	<0.001	<0.001			<0.001		<0.001	<0.001	<0.001	<0.001
	11/04/15	8260B	<0.001	<0.001	<0.001		<0.002	<0.004	<0.004	<0.01		<0.01					<0.001			<0.001	<0.001			<0.001	<0.001			<0.003	<0.001	<0.001			<0.001		<0.001	<0.001	<0.001	<0.001
	08/20/15	8260B	<0.001	<0.001	<0.001		<0.002	<0.004	<0.004	<0.01		<0.01					<0.001			<0.001	<0.001			<0.001	<0.001			<0.003	<0.001	<0.001			<0.001		<0.001	<0.001	<0.001	<0.001
	06/09/15	8260B	<0.001	<0.001	<0.001		<0.002	<0.004	<0.004	<0.01		<0.01					<0.001			<0.001	<0.001			<0.001	<0.001			<0.003	<0.001	<0.001			<0.001		<0.001	<0.001	<0.001	<0.001
	03/11/15	8260B	<0.001	<0.001	<0.001		<0.002	<0.004	<0.004	<0.01		<0.01					<0.001			<0.001	<0.001			<0.001	<0.001			<0.003	<0.001	<0.001			<0.001		<0.001	<0.001	<0.001	<0.001
	11/14/14	8260B	<0.001	<0.001	<0.001		<0.002	<0.004	<0.004	<0.01		<0.01					<0.001			<0.001	<0.001			<0.001	<0.001			<0.003	<0.001	<0.001			<0.001		<0.001	<0.001	<0.001	<0.001
	09/24/14	8260B	<0.001	<0.001	<0.001		<0.002	<0.004	<0.004	<0.01		<0.01					<0.001			<0.001	<0.001			<0.001	<0.001			<0.003	<0.001	<0.001			<0.001		<0.001	<0.001	<0.001	<0.001
	11/14/14	8260B	<0.001	<0.001	<0.001		<0.002	<0.004	<0.004	<0.01		<0.01					<0.001			<0.001	<0.001			<0.001	<0.001			<0.003	<0.001	<0.001			<0.001		<0.001	<0.001	<0.001	<0.001
	09/24/14	8260B	<0.001	<0.001	<0.001		<0.002	<0.004	<0.004	<0.01		<0.01					<0.001			<0.001	<0.001			<0.001	<0.001			<0.003	<0.001	<0.001			<0.001		<0.001	<0.001	<0.001	<0.001
MKTF-29	10/22/19	8260B/8011/504.1	<0.001	<0.001	<0.001	<0.0000094	<0.002	<0.004	<0.004	<0.01		<0.01					<0.001			<0.001	<0.001			<0.001	<0.001			<0.003	<0.001	<0.001			<0.001		<0.001	<0.001	<0.001	<0.001
	08/23/19	8260B/8011/504.1	<0.001	<0.001	<0.001	<0.0000092	<0.002	<0.004	<0.004	0.002		<0.01					<0.001			<0.001	<0.001			<0.001	<0.001			<0.003	<0.001	<0.001			<0.001		<0.001	<0.001	<0.001	<0.001
	05/06/19	8260B/8011/504.1	<0.001	<0.001	<0.001	<0.0000097	<0.002	<0.004	<0.004	0.0056		<0.01					<0.001			<0.001	<0.001			<0.001	<0.001			<0.003	<0.001	<0.001			<0.001		<0.001	<0.001	<0.001	<0.001
	03/28/19	8260B/8011/504.1	<0.001	<0.001	<0.001	<0.0000095	<0.002	<0.004	<0.004	0.0033		<0.01					<0.001			<0.001	<0.001			<0.001	<0.001			<0.003	<0.001	<0.001			<0.001		<0.001	<0.001	<0.001	<0.001
	11/15/18	8260B	<0.001	<0.001	<0.001	*<0.001**	<0.002	<0.004	<0.004	<0.01		<0.01					<0.001			<0.001	<0.001			<0.001	<0.001			<0.003	<0.001	<0.001			<0.001		<0.001	<0.001	<0.001	<0.001
	08/20/18	8260B	<0.001	<0.001	<0.001	*<0.001**	<0.002	<0.004	<0.004	<0.01		<0.01					<0.001			<0.001	<0.001			<0.001	<0.001			<0.003	<0.001	<0.001			<0.001		<0.001	<0.001	<0.001	<0.001
	05/01/18	8260B/8011/504.1	<0.001	<0.001	<0.001	<0.0000095	<0.002	<0.004	<0.004	0.0027		<0.01					<0.001			<0.001	<0.001			<0.001	<0.001			<0.003	<0.001	<0.001			<0.001		<0.001	<0.001	<0.001	<0.001
	02/06/18	8260B	<0.001	<0.001	<0.001	*<0.001**	<0.002	<0.004	<0.004	<0.01		<0.01					<0.001			<0.001	<0.001			<0.001	<0.001			<0.003	<0.001	<0.001			<0.001		<0.001	<0.001	<0.001	<0.001
	11/20/17	8260B	<0.001	<0.001	<0.001	*<0.001**	<0.002	0.0003	0.0003	0.0018		<0.01					<0.001			<0.001	<0.001			<0.001	<0.001			<0.003	<0.001	<0.001			<0.001		<0.001	<0.001	<0.001	<0.001
	10/03/17	8260B	<0.001	<0.001	<0.001	*<0.001**	<0.002	<0.004	<0.004	0.0046		<0.01					<0.001			<0.001	<0.001			<0.001	<0.001			<0.003	<0.001	<0.001			<0.001		<0.001	<0.001	<0.001	<0.001
	06/05/17	8260B	0.00015	<0.001	<0.001	*<0.001**	<0.002	<0.004	<0.004	0.0025		<0.01					<0.001			<0.001	<0.001			<0.001	<0.001			<0.003	<0.001	<0.001			<0.001		<0.001	<0.001	<0.001	<0.001
	03/29/17	8260B	<0.001	<0.001	<0.001	*<0.001**	<0.002	<0.004	<0.004	<0.01		<0.01					<0.001			<0.001	<0.001			<0.001	<0.001			<0.003	<0.001	<0.001			<0.001		<0.001	<0.001	<0.001	<0.001
	10/28/16	8260B	<0.001	<0.001	<0.001	*<0.001**	<0.002	<0.004	<0.004	<0.01		<0.01					<0.001			<0.001	<0.001			<0.001	<0.001			<0.003	<0.001	<0.001			<0.001		<0.001	<0.001	<0.001	<0.001
	09/07/16	8260B	<0.001	<0.001	<0.001	*<0.001**	<0.002	<0.004	<0.004	<0.01		<0.01					<0.001			<0.001	<0.001			<0.001	<0.001			<0.003	<0.001	<0.001			<0.001		<0.001	<0.001	<0.001	<0.001
	06/09/16	8260B	<0.001	<0.001	<0.001	<0.00001	<0.002	<0.004	<0.004	<0.01		<0.01					<0.001			<0.001	<0.001			<0.001	<0.001			<0.003	<0.001	<0.001			<0.001		<0.001	<0.001	<0.001	<0.001
	02/23/16	8260B	<0.001	<0.001	<0.001	*<0.001**	<0.002	<0.004	<0.004	<0.01		<0.01					<0.001			0.0003	<0.001			<0.001	<0.001			<0.003	<0.001	<0.001			<0.001		<0.001	<0.001	<0.001	<0.001
	11/04/15	8260B	<0.001	<0.001	<0.001		<0.002	<0.004	<0.004	<0.01		<0.01					<0.001			<0.001	<0.001			<0.001	<0.001			<0.003	<0.001	<0.001			<0.001		<0.001	<0.001	<0.001	<0.001
	08/20/15	8260B	<0.001	<0.001	<0.001		<0.002	<0.004	<0.004	<0.01		<0.01					<0.001			<0.001	<0.001			<0.001	<0.001			<0.003	<0.001	<0.001			<0.001		<0.001	<0.001	<0.001	<0.001
	06/10/15	8260B	<0.001	<0.001	<0.001		<0.002	<0.004	<0.004	<0.01		<0.01					<0.001			<0.001	<0.001			<0.001	<0.001			<0.003	<0.001	<0.001			<0.001		<0.001	<0.001	<0.001	<0.001
	03/11/15	8260B	<0.001	<0.001	<0.001		<0.002	<0.004	<0.004	<0.01		<0.01					<0.001			<0.001	<0.001			<0.001	<0.001			<0.003	<0.001	<0.001			<0.001		<0.001	<0.001	<0.001	<0.001
	09/24/14	8260B	<0.001	<0.001	<0.001		<0.002	<0.004	<0.004	<0.01		<0.01					<0.001			<0.001	<0.001			<0.001	<0.001			<0.003	<0.001	<0.001			<0.001		<0.001	<0.001	<0.001	<0.001
	04/09/14	8260B	<0.001	<0.001	<0.001		<0.002	<0.004	<0.004	<0.01		<0.01					<0.001			<0.001	<0.001			<0.001	<0.001			<0.003	<0.001	<0.001			<0.0.01		<0.001	<0.001	<0.001	<0.001
MKTF-30	10/23/19	8260B/8011/504.1/EDB	<0.001	<0.001	0.0021	<0.0000094	<0.002	<0.004	<0.004	<0.010	<0.003	<0.01	<0.001	<0.002	<0.001		0.0043		<0.001	**0.047**	0.0044			<0.001	<0.001		<0.003	<0.003	<0.001	<0.001			<0.001		0.00028	0.00035	0.003	<0.001
	08/23/19	8260B/8011/504.1	<0.001	<0.001	0.0017	<0.0000093	<0.002	<0.004	<0.004	0.002	<0.003	<0.01	<0.001	<0.002	<0.001		0.0032		<0.001	**0.039**	0.0031			<0.001	<0.001		<0.003	<0.003	<0.001	<0.001			<0.001		0.00022	0.00031	0.0026	<0.001
	05/06/19	8260B/8011/504.1	<0.001	<0.001	0.0012	<0.0000096	<0.002	<0.004	<0.004	0.0055	<0.003	<0.01	<0.001	<0.002	<0.001		0.0028		<0.001	**0.036**	0.0025			<0.001	<0.001		<0.003	<0.003	<0.001	<0.001			<0.001		<0.001	0.00023	0.0021	<0.001
	03/28/19	8260B/8011/504.1	<0.001	<0.001	0.0011	<0.0000095	<0.002	<0.004	<0.004	0.0037	<0.003	<0.01	<0.001	<0.002	<0.001		0.002		<0.001	**0.027**	0.0017			<0.001	<0.001		<0.003	<0.003	<0.001	<0.001			<0.001		<0.001	0.00025	0.0016	<0.001
	11/15/18	8260B/8011/504.1	<0.001	<0.001	0.003	<0.0000094	<0.002	<0.004	<0.004	<0.01	<0.003	<0.01	<0.001	<0.002	<0.001		0.0053		<0.001	**0.065**	0.0051			<0.001	<0.001		<0.003	<0.003	<0.001	<0.001			0.00017		0.0008	0.00041	0.0038	<0.001
	08/20/18	8260B/8011/504.1	<0.001	<0.001	0.0031	<0.0000092	<0.002	<0.004	<0.004	<0.01	<0.003	<0.01	<0.001	<0.002	<0.001		0.0048		<0.001	**0.06**	0.0048			<0.001	<0.001		<0.003	<0.003	<0.001	<0.001			0.00017		0.00087	0.00052	0.0037	<0.001
	05/01/18	8260B/8011/504.1	<0.001	<0.01	0.0012	<0.0000095	<0.002	<0.004	<0.004	0.0017	<0.003	<0.01	<0.001	<0.002	<0.001		0.0024		<0.001	**0.033**	0.002			<0.001	<0.001		<0.003	<0.003	<0.001	<0.001			0.00016		0.00044	0.00037	0.002	<0.001
	02/06/18	8260B/8011/504.1	<0.001	<0.001	0.0034	<0.0000096	<0.002	<0.004	<0.004	<0.01	<0.003	<0.01	<0.001	<0.002	<0.001		0.0076		<0.001	**0.078**	0.0062			<0.001	<0.001		<0.003	<0.003	<0.001	<0.001			0.00027		0.0014	0.00074	0.005	<0.001
	11/20/17	8260B	<0.001	<0.001	0.003	*<0.001**	<0.002	<0.004	0.00022	0.0013	<0.003	<0.01	<0.001	<0.002	<0.001		0.0062		<0.001	**0.068**	0.0049			<0.001	<0.001		<0.003	<0.003	<0.001	<0.001			0.00032		0.0015	0.00064	0.0041	<0.001
	10/03/17	8260B	<0.001	<0.001	0.0029	*<0.001**	<0.002	<0.004	<0.004	0.0065	<0.003	<0.01	<0.001	<0.002	<0.001		0.0056		<0.001	**0.068**	0.005			<0.001	<0.001		<0.003	<0.003	<0.001	<0.001			0.00027		0.0015	0.00069	0.0041	<0.001
	06/05/17	8260B/8011/504.1	<0.002	<0.002	0.0024	*<0.002**	<0.004	<0.008	<0.008	0.005	<0.006	<0.02	<0.002	<0.004	<0.002		0.0044		<0.002	**0.057**	0.0044			<0.002	<0.002		0.001	<0.006	<0.002	<0.002			<0.002		0.00072	0.00034	0.0038	*<0.002**
	03/29/17	8260B/8011/504.1	<0.001	<0.001	0.0038	*<0.001**	<0.002	<0.004	<0.004	<0.01	<0.003	<0.01	<0.001	<0.002	0.00027		0.0088		<0.001	**0.097**	0.0066			<0.001	<0.001		<0.003	<0.003	<0.001	<0.001			0.00022		0.0016	0.00089	**0.0059**	<0.001
	10/28/16	8260B/8011/504.1	<0.001	<0.001	**0.0052**	*<0.01**	<0.002	<0.004	<0.004	<0.01		<0.01		<0.002	0.0002		0.01			**0.11**	**0.0079**			<0.001	<0.001			<0.003	<0.001	<0.001			0.00047		0.0026	0.00091	**0.0069**	<0.001
	09/07/16	8260B/8011/504.1	<0.001	<0.001	**0.0057**	*<0.01**	<0.002	<0.004	<0.004	<0.01		<0.01		<0.002	<0.001		0.012			**0.11**	**0.012**			<0.001	<0.001			<0.003	<0.001	<0.001			0.00066		0.0027	0.00096	**0.0079**	0.0018
	06/09/16	8260B	<0.001	<0.001	**0.006**	*<0.01**	<0.002	<0.004	<0.004	<0.01		<0.01		<0.002	<0.001		0.012			**0.13**	**0.01**			<0.001	<0.001			<0.003	<0.001	<0.01			0.00077		0.0041	0.0012	**0.0088**	<0.001
	02/23/16	8260B	<0.001	<0.001	**0.0067**	*<0.001**	<0.002	<0.004	<0.004	<0.01		<0.01		0.00039	0.00027		0.012			**0.13**	**0.01**			<0.001	<0.001			<0.003	<0.001	<0.001			0.00065		0.0037	0.0014	**0.008**	<0.001
	11/04/15	8260B	<0.001	<0.001	**0.0068**		<0.002	<0.004	<0.004	<0.01		<0.01					0.012			**0.13**	**0.01**			<0.001	<0.001			<0.003	<0.001	<0.001			<0.001		0.0033	0.0014	**0.0088**	<0.001
	08/20/15	8260B	<0.001	<0.001	**0.0051**		<0.002	<0.004	<0.004	<0.01		<0.01					0.0087			**0.11**	**0.0086**			<0.001	<0.001			<0.003	<0.001	<0.001			<0.001		0.0025	0.001	**0.0064**	<0.001
	06/10/15	8260B	<0.001	<0.001	0.005		<0.002	<0.004	<0.004	<0.01		<0.01					0.0067			**0.11**	0.0067			<0.001	<0.001			<0.003	<0.001	<0.001			<0.001		0.0029	<0.001	**0.0062**	<0.001
	03/11/15	8260B	<0.001	<0.001	0.004		<0.002	<0.004	<0.004	<0.01		<0.01					0.0045			**0.081**	0.004			<0.001	<0.001			<0.003	<0.001	<0.001			<0.001		0.0019	<0.001	0.0036	<0.001
	11/17/14	8260B	<0.001	<0.001	**0.0053**		<0.002	<0.004	<0.004	<0.01		<0.01					0.0039			**0.087**	0.0027			<0.001	<0.001			<0.003	<0.001	<0.001			<0.001		0.003	0.0011	0.0044	**0.0048**
	09/24/14	8260B	<0.001	<0.001	0.0044		<0.002	<0.004	<0.004	<0.01		<0.01					0.0042			**0.068**	0.0035			<0.001	<0.001			<0.003	<0.001	<0.001			<0.001		0.0025	0.0011	0.004	<0.001
	04/09/14	8260B	<0.001	<0.001	<0.001		<0.002	<0.004	<0.004	<0.01		<0.01					<0.01			0.025	<0.001			<0.001	<0.001			<0.003	<0.001	<0.001			<0.001		<0.001	<0.001	0.0014	<0.001

8.17.5 MKTF WELLS

Volatile Organic Compounds Analytical Results

			PARAMETERS																																		
		STANDARDS	1,2,4-Trimethyl benzene (mg/L)	1,3,5-Trimethyl benzene (mg/L)	1,2-Dichloro ethane (EDC) (mg/L)	1,2-Dibro moethane (EDB) (mg/L)	Naphtha-lene (mg/L)	1-Methyl naphtha-lene (mg/L)	2-Methyl naphtha-lene (mg/L)	Acetone (mg/L)	Bromo methane (mg/L)	(Methyl ethyl ketone) 2-Butanone (mg/L)	Chloro benzene (mg/L)	Chloro-ethane (mg/L)	Chloro-form (mg/L)	Chloro-methane (mg/L)	cis-1,2-DCE (mg/L)	1,2-Dichloro benzene (mg/L)	1,4-Dichloro benzene (mg/L)	1,1-Dichloro ethane (mg/L)	1,1-Dichloro ethene (mg/L)	1,2-Dichloro propane (mg/L)	2-Hexanone (mg/L)	Isopropyl benzene (mg/L)	4-Isopropyl toluene (mg/L)	4-Methyl-2-pen-tanone (mg/L)	Methylene Chloride (mg/L)	n-Butyl benzene (mg/L)	n-Propyl benzene (mg/L)	sec-Butyl benzene (mg/L)	Styrene (mg/L)	tert-Butyl benzene (mg/L)	Tetra-chloro ethene (PCE) (mg/L)	1,2,4-Trichloro-benzene (mg/L)	1,1,1-Trichloro ethane (mg/L)	1,1,2-Trichloro ethane (mg/L)	Trichloro ethene (TCE) (mg/L)	Vinyl Chloride (mg/L)
		WQCC 20 NMAC 6.2.3103 (DEC 2018)	NE	NE	0.005	0.00005	0.03	NE	NE	NE	NE	NE	NE	NE	0.1	NE	0.07	0.6	0.075	0.025	0.007	0.005	NE	NE	NE	NE	0.005	NE	NE	NE	0.1	NE	0.005	0.07	0.2	0.005	0.005	0.002
		40 CFR 141.61 MCL	NE	NE	0.005	0.00005	NE	NE	NE	NE	NE	NE	NE	NE	NE	NE	0.07	NE	0.075	NE	0.007	0.005	NE	NE	NE	NE	0.005	NE	NE	NE	0.1	NE	0.005	0.07	0.2	0.005	0.005	0.002
		NMED Tap Water (JUNE 2019)	NE	NE	0.0017	0.0000747	0.00165	0.0114	0.035	14.06	0.0075	5.56	0.0776	20.86	0.00229	0.0203	0.0365	NE	0.0048	0.0275	0.284	0.00437	NE	0.447	NE	1.24	0.106	NE	NE	NE	1.21	NE	NE	0.00398	8	0.00042	0.00259	0.00032
		EPA RSL for Tap Water (NOVEMBER 2019)	0.056	0.06	0.00017	0.0000075	0.00017	0.0011	0.036	14	0.0075	5.6	0.078	21	0.00022	0.19	0.036	0.3	0.00048	0.0028	0.28	0.00085	0.038	NE	NE	6.3	0.011	1	0.66	2	1.2	0.69	0.011	0.0012	8	0.00028	0.00049	0.000019
Well ID	DATE SAMPLED	METHOD																																			
MKTF-31	10/22/19	8260B/8011/504.1	0.00022	<0.001	0.021	0.0055	<0.002	<0.004	<0.004	<0.01		<0.01			0.00048		0.0017			0.036	0.053	<0.001		0.00093	<0.001		0.0002	<0.003	<0.001	0.0004			<0.001		0.0036	0.0023	0.0044	0.00046
	08/23/19	8260B/8011/504.1	<0.001	<0.001	0.023	0.0000066	<0.002	<0.004	<0.004	<0.01		<0.01			0.0006		0.0019			0.039	0.06	<0.001		0.001	<0.001		<0.003	0.0011	<0.001	0.00055			<0.001		0.0039	0.0025	0.0048	<0.001
	05/06/19	8260B/8011/504.1	<0.001	<0.001	0.019	0.0000071	<0.002	<0.004	<0.004	<0.01		<0.01			0.00039		0.0017			0.035	0.052	<0.001		0.00057	<0.001		<0.003	<0.003	<0.001	<0.001			<0.001		0.0036	0.002	0.0041	<0.001
	02/20/19	8260B/8011/504.1	<0.001	<0.001	0.03	0.0000062	<0.002	<0.004	<0.004	<0.01		<0.01			0.00065		0.0019			0.052	0.095	<0.001		0.0015	<0.001		<0.003	0.00044	<0.001	0.00054			<0.001		0.0055	0.0028	0.0061	<0.001
	11/15/18	8260B/8011/504.1	<0.001	<0.001	0.027	0.0000092	<0.002	<0.004	<0.004	<0.01		<0.01			0.00045		0.0017			0.045	0.069	<0.001		0.00028	<0.001		<0.003	<0.003	<0.001	<0.001			<0.001		0.0045	0.0026	0.0048	<0.001
	08/17/18	8260B/8011/504.1	<0.001	<0.001	0.026	0.00001	<0.002	<0.004	<0.004	<0.01		<0.01			0.00044		0.0016			0.039	0.073	<0.001		0.0012	<0.001		<0.003	<0.003	<0.001	0.00053			<0.001		0.0048	0.0024	0.0051	<0.001
	05/06/18	8260B/8011/504.1	<0.001	<0.001	0.029	0.0096	<0.002	<0.004	<0.004	<0.01		<0.01			0.00071		0.0021			0.049	0.093	<0.001		0.0016	<0.001		<0.003	0.00046	<0.001	0.0007			<0.001		0.0058	0.003	0.006	<0.001
	02/05/18	8260B	<0.001	<0.001	0.026	<0.001*	<0.002	<0.004	<0.004	0.0027		<0.01			0.00063		0.0019			0.044	0.091	<0.001		0.0017	<0.001		<0.003	0.00041	<0.001	0.00055			<0.001		0.0056	0.0029	0.0056	<0.001
	11/21/17	8260B	<0.001	<0.001	0.022	<0.001*	<0.002	<0.004	<0.004	<0.01		<0.01			<0.001		0.0016			0.035	0.067	0.00019		0.0016	<0.001		0.00029	0.00017	<0.001	<0.001			<0.001		0.0046	0.0024	0.0041	0.00029
	09/25/17	8260B	<0.001	<0.001	0.025	<0.001*	<0.002	<0.004	<0.004	<0.01		<0.01			0.00052		0.0017			0.041	0.08	<0.001		0.0018	<0.001		<0.003	0.00035	<0.001	0.00054			<0.001		0.0053	0.0027	0.0048	<0.001
	06/05/17	8260B	<0.001	<0.001	0.022	<0.001*	<0.002	<0.004	<0.004	<0.01		<0.01			0.00047		0.0017			0.036	0.07	<0.001		0.0011	<0.001		<0.003	0.00024	<0.001	0.00036			<0.001		0.0051	0.0023	0.0043	<0.001
	03/07/17	8260B	<0.001	<0.001	0.02	<0.001*	<0.002	<0.004	<0.004	0.0026		<0.01			0.00045		0.0018			0.035	0.07	<0.001		0.001	<0.001		<0.003	0.00027	<0.001	0.00035			<0.001		0.0047	0.0022	0.0041	<0.001
	10/31/16	8260B	<0.001	<0.001	0.021	0.0035	<0.002	<0.004	<0.004	<0.01		<0.01			0.00041		0.0016			0.031	0.057	<0.001		0.00071	<0.001			0.00032	<0.001	0.00037			<0.001		0.0048	0.0022	0.0037	<0.001
	09/08/16	8260B	<0.001	<0.001	0.024	<0.001*	<0.002	<0.004	<0.004	<0.01		<0.01			0.00029		0.0014			0.033	0.069	<0.001		0.0016	<0.001			<0.003	<0.001	0.00066			<0.001		0.0056	0.0024	0.0038	<0.001
	06/09/16	8260B	<0.001	<0.001	0.022	0.0000067	<0.002	<0.004	<0.004	<0.01		<0.01			<0.001		0.002			0.037	0.066	<0.001		0.00094	<0.001			0.00026	<0.001	0.00042			<0.001		0.0055	0.0024	0.004	<0.001
	02/23/16	8260B	<0.001	<0.001	0.023	<0.001*	<0.002	<0.004	<0.004	<0.01		<0.01			0.0004		0.0016			0.034	0.057	0.0002		0.00084	<0.001			<0.003	<0.001	<0.001			<0.001		0.0056	0.0024	0.0036	0.00026
	11/04/15	8260B	<0.001	<0.001	0.022		<0.002	<0.004	<0.004	<0.01		<0.01					0.0021			0.033	0.057			<0.001	<0.001			<0.003	<0.001	<0.001			<0.001		0.005	0.0021	0.0035	<0.001
	08/21/15	8260B	<0.001	<0.001	0.018		<0.002	<0.004	<0.004	<0.01		<0.01					0.0017			0.028	0.047			<0.001	<0.001			<0.003	<0.001	<0.001			<0.001		0.0048	0.0017	0.0032	<0.001
	06/10/15	8260B	<0.001	<0.001	0.018		<0.002	<0.004	<0.004	<0.01		<0.01					0.0017			0.029	0.053			<0.001	<0.001			<0.003	<0.001	<0.001			<0.001		0.0049	0.0016	0.0031	<0.001
	03/11/15	8260B	<0.001	<0.001	0.014		<0.002	<0.004	<0.004	<0.01		<0.01					0.0016			0.021	0.04			<0.001	<0.001			<0.003	<0.001	<0.001			<0.001		0.0039	0.0015	0.0025	<0.001
	11/17/14	8260B	<0.001	<0.001	0.016		<0.002	<0.004	<0.004	<0.01		<0.01					0.0018			0.029	0.034			<0.001	<0.001			<0.003	<0.001	<0.001			<0.001		0.0039	0.0016	0.0024	0.0019
	09/23/14	8260B	<0.001	<0.001	0.013		<0.002	<0.004	<0.004	<0.01		<0.01					0.0018			0.022	0.041			<0.001	<0.001			<0.003	<0.001	<0.001			<0.001		0.0037	0.0016	0.0024	<0.001
	04/08/14	8260B	<0.001	<0.001	0.021		<0.002	<0.004	<0.004	<0.01		<0.01					0.0016			0.028	0.059			<0.001	<0.001			<0.003	<0.001	<0.001			<0.001		0.0058	0.0018	0.003	<0.001
MKTF-32	10/23/19	8260B/8011/504.1	<0.002	<0.002	0.014	<0.0000094	<0.004	<0.008	<0.008	<0.02		<0.02				<0.006	0.0015			0.012	0.018	<0.002		<0.002	<0.002			<0.006	<0.002	0.00054			<0.002		<0.002	0.0011	<0.002	<0.002*
	08/20/19	8260B/8011/504.1	<0.001	<0.001	0.015	<0.0000094	<0.002	<0.004	<0.004	<0.01		<0.01				<0.003	0.0017			0.014	0.021	<0.001		<0.001	<0.001			<0.003	<0.001	0.00062			<0.001		0.00022	0.0012	0.00028	<0.001
	05/07/19	8260B/8011/504.1	<0.002	<0.002	0.014	<0.0000094	<0.004	<0.008	<0.008	<0.02		<0.02				<0.004	0.0015			0.013	0.024	<0.002		<0.002	<0.002			<0.006	<0.002	0.00056			<0.002		<0.002	0.00086	0.00034	<0.002*
	02/13/19	8260B/8011/504.1	<0.002	<0.002	0.015	<0.0000093	<0.004	<0.008	<0.008	0.005		<0.02				<0.006	0.0021			0.013	0.027	<0.002		<0.002	<0.002			<0.006	<0.002	0.00063			<0.002		<0.002	0.00086	<0.002	<0.002*
	11/15/18	8260B/8011/504.1	<0.002	<0.002	0.015	<0.0000094	<0.004	<0.008	0.00072	<0.02		<0.02				<0.003	0.002			0.015	0.026	<0.002		<0.002	<0.002			<0.006	<0.002	0.00064			<0.001		<0.002	0.00083	<0.002	<0.002*
	08/28/18	8260B/8011/504.1	<0.002	<0.002	0.019	<0.0000093	<0.004	<0.008	<0.008	<0.02		<0.02				<0.004	0.0018			0.017	0.026	<0.002		<0.002	<0.002			<0.006	<0.002	0.00066			<0.002		<0.002	0.0011	<0.002	<0.002*
	05/09/18	8260B/8011/504.1	<0.001	<0.001	0.02	<0.0000094	<0.002	<0.004	<0.004	<0.01		<0.01				<0.003	0.0023			0.018	0.029	<0.001		<0.001	<0.001			<0.003	<0.001	0.00075			<0.001		0.00038	0.0014	0.00028	<0.001
	02/07/18	8260B/8011/504.1	<0.001	<0.001	0.019	<0.0000094	<0.002	<0.004	<0.004	<0.01		<0.001				<0.003	0.002			0.017	0.034	<0.001		0.00013	<0.001			<0.003	<0.001	0.00068			<0.001		0.00051	0.0015	0.00036	<0.001
	11/27/17	8260B	<0.001	<0.001	0.016	<0.001*	<0.002	<0.004	<0.004	<0.01		<0.01				<0.003	0.0016			0.014	0.023	0.00014		<0.001	<0.001			<0.003	<0.001	0.00066			<0.001		0.00029	0.0012	0.00019	<0.001
	09/25/17	8260B	0.00012	<0.001	0.017	<0.001*	0.00098	0.0018	0.0013	0.0049		<0.01				<0.003	0.0017			0.016	0.029	<0.001		0.00012	<0.001			<0.003	<0.001	0.00079			<0.001		0.00047	0.0014	0.0003	<0.001
	06/06/17	8260B/8011/504.1/EDB	<0.001	<0.001	0.019	<0.001*	<0.002	<0.004	<0.004	<0.01		<0.01				<0.003	0.002			0.019	0.038	<0.001		0.00013	<0.001			<0.003	<0.001	0.00063			<0.001		0.00057	0.0014	0.00026	<0.001
	03/07/17	8260B	<0.001	<0.001	0.018	<0.001*	<0.002	<0.004	<0.004	0.0024		<0.01				<0.003	0.0019			0.018	0.035	<0.001		0.00022	<0.001			<0.003	<0.001	0.00081			<0.001		0.00058	0.0014	0.00024	<0.001
	10/31/16	8260B	<0.001	<0.001	0.02	<0.01*	<0.002	<0.004	<0.004	<0.01		<0.01				<0.003	0.0016			0.015	0.03			0.00022	<0.001			<0.003	<0.001	0.00086			<0.001		0.00047	0.0016	<0.001	<0.001
	09/09/16	8260B/8011/504.1/EDB	<0.002	<0.002	0.017	<0.01*	<0.004	<0.008	<0.008	<0.02		<0.02				<0.006	0.0015			0.012	0.026			0.00027	<0.002			<0.006	<0.002	0.0011			<0.002		0.00061	0.0011	<0.002	<0.002*
	06/09/16	8260B	<0.002	<0.002	0.026	<0.01*	<0.004	<0.008	<0.008	<0.02		<0.02				<0.006	0.0021			0.023	0.046			0.00054	<0.002			<0.006	<0.002	0.001			<0.002		0.0012	0.0019	<0.002	<0.002*
	02/24/16	8260B	<0.001	<0.001	0.019	<0.001*	<0.002	<0.004	<0.004	<0.01		<0.01				<0.003	0.0016			0.017	0.028			0.0021	<0.001			0.00017	<0.001	0.00093			<0.001		0.00055	0.0016	<0.001	<0.001
	11/05/15	8260B	<0.001	<0.001	0.027		<0.002	<0.004	<0.004	<0.01		<0.01				<0.003	0.002			0.021	0.039			<0.001	<0.001			<0.003	<0.001	0.0015			<0.001		0.0011	0.0022	<0.001	<0.001
	08/21/15	8260B	<0.002	<0.002	0.022		<0.004	<0.008	<0.008	<0.02		<0.02				<0.006	<0.02			0.019	0.038			<0.002	<0.002			<0.006	<0.002	<0.002			<0.002		<0.002	<0.002	<0.002	<0.002*
	06/09/15	8260B	<0.001	<0.001	0.022		<0.002	<0.004	<0.004	<0.01		<0.01				<0.001	0.0015			0.018	0.036			<0.001	<0.001			<0.003	<0.001	<0.001			<0.001		<0.001	0.0021	<0.001	<0.001
	03/12/15	8260B	<0.001	<0.001	0.025		<0.002	<0.004	<0.004	<0.01		<0.01				<0.001	0.0013			0.019	0.048			<0.001	<0.001			<0.003	<0.001	<0.001			<0.001		0.0011	0.0017	<0.001	<0.001
	11/17/14	8260B	<0.001	<0.001	0.028		<0.002	<0.004	<0.004	<0.01		<0.01				0.013 [1]	0.0012			0.024	0.041			0.0011	<0.001			<0.003	<0.001	<0.001			<0.001		0.0011	0.0025	<0.001	0.002
	09/23/14	8260B	<0.005	<0.005	0.029		<0.01	<0.02*	<0.02	<0.05		<0.05					<0.005			0.023	0.054			<0.005	<0.005			<0.015	<0.005	<0.005			<0.005*		<0.005	<0.005*	<0.005*	<0.005*
	04/09/14	8260B	<0.001	<0.001	0.03		<0.002	<0.004	<0.004	<0.01		<0.01					<0.001			0.022	0.036			0.0025	<0.001			<0.003	<0.001	<0.001			<0.001		0.0015	0.0023	<0.001	<0.001
MKTF-33	10/24/19	8260B/8011/504.1	<0.002	<0.002	<0.002	<0.0000094	<0.004	<0.008	<0.008	<0.02		<0.02					<0.002		<0.002	<0.002	<0.002			<0.002	<0.002			<0.006	<0.002	<0.002	<0.002		<0.002		<0.002	<0.002	<0.002	<0.002*
	08/20/19	8260B/8011/504.1	<0.001	<0.001	<0.001	<0.0000094	<0.002	<0.004	<0.004	<0.01		<0.01					<0.001		<0.001	<0.001	<0.001			<0.001	<0.001			<0.003	<0.001	0.00047	<0.001		<0.001		<0.001	<0.001	<0.001	<0.001
	05/09/19	8260B/8011/504.1	<0.001	<0.001	<0.001	<0.0000093	<0.002	<0.004	<0.004	<0.01		<0.01					<0.001		<0.001	<0.001	<0.001			<0.001	<0.001			<0.001	<0.001	<0.001	<0.001		<0.001		<0.001	<0.001	<0.001	<0.001
	03/26/19	8260B/8011/504.1	<0.005	<0.005	<0.005*	<0.0000093	<0.01	<0.02*	<0.02	<0.05		<0.05					<0.005		<0.005	<0.005	<0.005			<0.005	<0.005			<0.015	<0.005	<0.005	<0.005		<0.005*		<0.005	<0.005*	<0.005*	<0.005*
	11/28/18	8260B/8011/504.1	<0.002	<0.002	<0.002	<0.0000095	<0.004	<0.008	<0.008	<0.02		<0.02					<0.002		<0.002	<0.002	<0.002			<0.002	<0.002			<0.006	<0.002	<0.002	<0.002		<0.002		<0.002	<0.002	<0.002	<0.002*
	08/30/18	8260B/8011/504.1/EDB	<0.001	<0.001	<0.001	<0.0000092	<0.002	<0.004	<0.004	<0.01		<0.01					<0.001		<0.001	<0.001	<0.001			<0.001	<0.001			<0.003	<0.001	<0.001	<0.001		<0.001		<0.001	<0.001	<0.001	<0.001
	05/10/18	8260B	<0.001	<0.001	<0.001	<0.001*	<0.002	<0.004	<0.004	<0.01		<0.01					<0.001		<0.001	<0.001	<0.001			<0.001	<0.001			<0.003	<0.001	<0.001	<0.001		<0.001		<0.001	<0.001	<0.001	<0.001
	02/08/18	8260B	0.00037	0.00015	<0.001	<0.001*	<0.002	0.00049	0.00054	<0.01		<0.01					<0.001		<0.001	<0.001	<0.001			<0.001	<0.001			<0.003	<0.001	0.00012	<0.00		<0.001		<0.001	<0.001	<0.001	<0.001
	11/28/17	8260B	<0.001	<0.001	<0.001	<0.001*	<0.002	<0.004	<0.004	0.0027		<0.01					<0.001		<0.001	<0.001	<0.001			<0.001	<0.001			<0.003	<0.001	0.00021	<0.001		<0.001		<0.001	<0.001	<0.001	<0.001
	09/25/17	8260B	<0.001	<0.001	<0.001	<0.001*	<0.002	<0.004	<0.004	<0.01		<0.01					<0.001		<0.001	<0.001	<0.001			<0.001	<0.001			<0.003	<0.001	0.00029	<0.001		<0.001		<0.001	<0.001	<0.001	<0.001
	06/08/17	8260B	<0.001	<0.001	<0.001	<0.001*	<0.002	<0.004	<0.004	0.0037		<0.01					<0.001		<0.001	<0.001	<0.001			<0.001	<0.001			<0.003	<0.001	0.00033	<0.001		<0.001		<0.001	<0.001	<0.001	<0.001
	03/08/17	8260B	<0.001	<0.001	<0.001	<0.001*	<0.002	<0.004	<0.004	0.0016		<0.01					<0.001		<0.001	<0.001	<0.001			<0.001	<0.001			<0.003	<0.001	0.00047	<0.001		<0.001		<0.001	<0.001	<0.001	<0.001
	11/01/16	8260B	0.0003	0.00015	0.00034	<0.001*	0.00073	0.00069	0.00076	<0.01		<0.01					<0.001		<0.001	<0.001	<0.001			<0.001	0.0002			0.00042	0.00044	0.00095	0.00028		0.00018		<0.001	<0.001	<0.001	<0.001
	09/10/16	8260B	<0.001	<0.001	<0.001	<0.001*	<0.002	<0.004	<0.004	<0.01		<0.01					<0.001		<0.001	<0.001	<0.001			<0.001	<0.001			<0.003	<0.001	0.00081			<0.001		<0.001	<0.001	<0.001	<0.001
	06/10/16	8260B	0.00018	<0.001	<0.001	<0.001*	<0.002	<0.004	<0.004	<0.01		<0.01					<0.001		0.00014	<0.001	<0.001			<0.001	<0.001			<0.003	<0.001	0.0006			<0.001		<0.001	<0.001	<0.001	<0.001
	02/25/16	8260B	<0.001	<0.001	0.0002	<0.001*	<0.002	<0.004	<0.004	<0.01		<0.01					<0.001		0.00037	<0.001	<0.001			<0.001	<0.001			<0.003	<0.001	0.0016			<0.001		<0.001	<0.001	<0.001	<0.001
	11/09/15	8260B	<0.001	<0.001	<0.001		<0.002	<0.004	<0.004	<0.01		<0.01					<0.001			<0.001	<0.001			<0.001	<0.001			<0.001	<0.001	<0.001			<0.001		<0.001	<0.001	<0.001	<0.001
	08/21/15	8260B	<0.001	<0.001	<0.001		<0.002	<0.004	<0.004	<0.01		<0.01					<0.001			<0.001	<0.001			<0.001	<0.001			<0.001	<0.001	<0.001			<0.001		<0.001	<0.001	<0.001	<0.001
	06/09/15	8260B	<0.001	<0.001	<0.001		<0.002	<0.004	<0.004	<0.01		<0.01					<0.001			<0.001	<0.001			<0.001	<0.001			<0.003	<0.001	<0.001			<0.001		<0.001	<0.001	<0.001	<0.001
	03/12/15	8260B	<0.001	<0.001	<0.001		<0.002	<0.004	<0.004	<0.01		<0.01					<0.001			<0.001	<0.001			<0.001	<0.001			<0.003	<0.001	<0.001			<0.001		<0.001	<0.001	<0.001	<0.001
	11/17/14	8260B	<0.001	<0.001	<0.001		<0.002	<0.004	<0.004	<0.01		<0.01					<0.001			<0.001	<0.001			<0.001	<0.001			<0.003	<0.001	<0.001			<0.001		<0.001	<0.001	<0.001	<0.001
	09/23/14	8260B	<0.005	<0.005	<0.005*		<0.01	<0.02*	<0.02	<0.05		<0.05					<0.005			<0.005	<0.005			<0.005	<0.005			<0.015	<0.005	<0.005			<0.005*		<0.005	<0.005*	<0.005*	<0.005*
	04/10/14	8260B	<0.001	<0.001	<0.001		<0.002	<0.004	<0.004	<0.01		<0.01					<0.001			<0.001	<0.001			<0.001	<0.001			<0.003	<0.001	<0.001			<0.001		<0.001	<0.001	<0.001	<0.001

8.17.5 MKTF WELLS

Volatile Organic Compounds Analytical Results

			PARAMETERS																																		
		STANDARDS	1,2,4-Trimethyl benzene (mg/L)	1,3,5-Trimethyl benzene (mg/L)	1,2-Dichloro ethane (EDC) (mg/L)	1,2-Dibro moethane (EDB) (mg/L)	Naphtha-lene (mg/L)	1-Methyl naphtha-lene (mg/L)	2-Methyl naphtha-lene (mg/L)	Acetone (mg/L)	Bromo methane (mg/L)	(Methyl ethyl ketone) 2-Butanone (mg/L)	Chloro benzene (mg/L)	Chloro-ethane (mg/L)	Chloro-form (mg/L)	Chloro-methane (mg/L)	cis-1,2-DCE (mg/L)	1,2-Dichloro benzene (mg/L)	1,4-Dichloro benzene (mg/L)	1,1-Dichloro ethane (mg/L)	1,1-Dichloro ethene (mg/L)	1,2-Dichloro propane (mg/L)	2-Hexanone (mg/L)	Isopropyl benzene (mg/L)	4-Isopropyl toluene (mg/L)	4-Methyl-2-pen-tanone (mg/L)	Methylene Chloride (mg/L)	n-Butyl benzene (mg/L)	n-Propyl benzene (mg/L)	sec-Butyl benzene (mg/L)	Styrene (mg/L)	tert-Butyl benzene (mg/L)	Tetra-chloro ethene (PCE) (mg/L)	1,2,4-Trichloro-benzene (mg/L)	1,1,1-Trichloro ethane (mg/L)	1,1,2-Trichloro ethane (mg/L)	Trichloro ethene (TCE) (mg/L)	Vinyl Chloride (mg/L)
		WQCC 20 NMAC 6.2.3103 (DEC 2018)	NE	NE	**0.005**	**0.00005**	**0.03**	NE	NE	NE	NE	NE	NE	NE	**0.1**	NE	**0.07**	**0.6**	**0.075**	**0.025**	**0.007**	**0.005**	NE	NE	NE	NE	**0.005**	NE	NE	NE	**0.1**	NE	**0.005**	**0.07**	**0.2**	**0.005**	**0.005**	**0.002**
		40 CFR 141.61 MCL	NE	NE	0.005	0.00005	NE	NE	NE	NE	NE	NE	NE	NE	NE	NE	0.07	NE	0.075	NE	0.007	0.005	NE	NE	NE	NE	0.005	NE	NE	NE	0.1	NE	0.005	0.07	0.2	0.005	0.005	0.002
		NMED Tap Water (JUNE 2019)	NE	NE	0.0017	0.0000747	0.00165	**0.0114**	**0.035**	**14.06**	**0.0075**	**5.56**	**0.0776**	**20.86**	0.00229	**0.0203**	0.0365	NE	0.0048	0.0275	0.284	0.00437	NE	**0.447**	NE	**1.24**	0.106	NE	NE	NE	1.21	NE	NE	0.00398	8	0.00042	0.00259	0.00032
		EPA RSL for Tap Water (NOVEMBER 2019)	**0.056**	**0.06**	0.00017	0.0000075	0.00017	0.0011	0.036	14	0.0075	5.6	0.078	21	0.00022	0.19	0.036	0.3	0.00048	0.0028	0.28	0.00085	**0.038**	NE	NE	6.3	0.011	**1**	**0.66**	**2**	1.2	**0.69**	0.011	0.0012	8	0.00028	0.00049	0.000019
Well ID	**DATE SAMPLED**	**METHOD**																																			
MKTF-34	10/29/19	8260B/8011/504.1	<0.001	<0.001	<0.001	<0.0000094	<0.002	<0.004	<0.004	<0.01		<0.01					<0.001		<0.001	<0.001	0.00051	<0.001	<0.01	<0.001	<0.001	<0.01	<0.003	<0.003	<0.001	<0.001	<0.001	<0.001	<0.001	<0.001	<0.001	<0.001	0.001	<0.001
	08/19/19	8260B/8011/504.1	<0.001	<0.001	<0.001	<0.0000093	<0.002	<0.004	<0.004	<0.01		<0.01					<0.001		<0.001	<0.001	0.00043	<0.001	<0.01	<0.001	<0.001	<0.01	<0.003	<0.003	<0.001	<0.001	<0.001	<0.001	<0.001	<0.001	<0.001	<0.001	0.00089	<0.001
	05/09/19	8260B/8011/504.1	0.00022	<0.001	<0.001	<0.0000092	<0.002	<0.004	<0.004	0.0055		<0.01					<0.001		<0.001	<0.001	<0.001	<0.001	<0.01	<0.001	<0.001	<0.01	<0.003	<0.003	<0.001	<0.001	<0.001	<0.001	<0.001	<0.001	<0.001	<0.001	0.00049	<0.001
	03/26/19	8260B/8011/504.1	<0.001	<0.001	<0.001	<0.0000094	<0.002	<0.004	<0.004	0.0036		<0.01					<0.001		<0.001	<0.001	0.0021	<0.001	<0.01	<0.001	<0.001	<0.01	<0.003	<0.003	<0.001	<0.001	<0.001	<0.001	<0.001	<0.001	<0.001	<0.001	0.0002	<0.001
	11/28/18	8260B/8011/504.1	<0.001	<0.001	<0.001	<0.0000094	<0.002	<0.004	<0.004	<0.01		<0.01					<0.001		<0.001	<0.001	0.0021	<0.001	<0.01	<0.001	<0.001	<0.01	<0.003	<0.003	<0.001	<0.001	<0.001	<0.001	<0.001	<0.001	<0.001	<0.001	0.0037	<0.001
	08/24/18	8260B/8011/504.1/EDB	<0.001	<0.01	<0.001	<0.0000092	0.00049	<0.004	<0.004	<0.01		<0.01					<0.001		<0.001	<0.001	0.0024	<0.001	<0.01	<0.001	<0.001	<0.01	<0.003	<0.003	<0.001	<0.001	<0.001	<0.001	0.00022	<0.001	<0.001	<0.001	0.0036	<0.001
	05/04/18	8260B	<0.001	<0.01	<0.001	*<0.001**	<0.002	<0.004	<0.004	<0.01		<0.01					<0.001		<0.001	<0.001	0.0014	<0.001	<0.01	<0.001	<0.001	<0.01	<0.003	<0.003	<0.001	<0.001	<0.001	<0.001	0.00046	<0.001	<0.001	<0.001	0.0027	<0.001
	02/16/18	8260B	<0.001	<0.001	<0.001	*<0.001**	<0.002	<0.004	<0.004	0.0089		<0.01					<0.001		<0.001	0.00047	0.0014	<0.001	<0.01	<0.001	<0.001	<0.01	<0.003	<0.003	<0.001	<0.001	<0.001	<0.001	0.00046	<0.001	<0.001	<0.001	0.0031	<0.001
	12/01/17	8260B	<0.001	<0.001	<0.001	*<0.001**	<0.002	<0.004	<0.004	<0.01		<0.01					<0.001		<0.001	<0.001	0.0012	<0.001	<0.01	<0.001	<0.001	<0.01	<0.003	<0.003	<0.001	<0.001	<0.001	<0.001	0.00014	<0.001	<0.001	<0.001	0.0026	<0.001
	09/26/17	8260B	0.00014	<0.001	<0.001	*<0.001**	0.00059	0.00057	0.0007	0.0048		<0.01					<0.001		<0.001	<0.001	0.00056	<0.001	<0.01	<0.001	<0.001	<0.01	0.00014	<0.003	<0.001	<0.001	<0.001	<0.001	<0.001	<0.001	<0.001	<0.001	0.0019	<0.001
	06/14/17	8260B	<0.001	<0.001	<0.001	*<0.001**	<0.002	<0.004	<0.004	0.0053		<0.01					<0.001		<0.001	<0.001	0.00059	<0.001	<0.01	<0.001	<0.001	<0.01	<0.003	<0.003	<0.001	<0.001	<0.001	<0.001	<0.001	<0.001	<0.001	<0.001	0.002	<0.001
	03/01/17	8260B	<0.001	<0.001	<0.001	*<0.001**	<0.002	<0.004	<0.004	<0.01		<0.01					<0.001		<0.001	0.00047	0.00071	<0.001	<0.01	<0.001	<0.001	<0.01	<0.003	<0.003	<0.001	<0.001	<0.001	<0.001	<0.001	<0.001	<0.001	<0.001	0.0022	<0.001
	11/08/16	8260B	0.00023	<0.001	<0.001	*<0.001**	0.0004	0.00051	0.00048	<0.01		<0.01					0.00026		0.0004	<0.001	0.0028		<0.001	<0.001			<0.003	<0.001	<0.001				0.00022		<0.001	<0.001	0.0048	<0.001
	09/13/16	8260B	<0.001	<0.001	<0.001	*<0.001**	<0.001	<0.001	<0.001	<0.001		<0.001					<0.001			<0.001	0.00089		<0.001	<0.001			<0.003	<0.001	<0.001				<0.001		<0.001	<0.001	0.0019	<0.001
	06/10/16	8260B	0.00059	<0.001	<0.001	*<0.001**	0.0012	0.0015	0.0005	<0.01		<0.01					<0.001			0.00024	0.00078		<0.001	<0.001			<0.003	<0.001	<0.001				<0.001		<0.001	<0.001	0.002	<0.001
	02/25/16	8260B	<0.001	<0.001	0.00015	*<0.001**	0.00021	0.00043	0.00052	<0.01		<0.01					<0.001			0.0003	0.00042		<0.001	<0.001			<0.003	<0.001	<0.001				<0.001		<0.001	<0.001	0.0018	<0.001
	11/03/15	8260B	<0.001	<0.001	<0.001		<0.002	<0.004	<0.004	<0.01		<0.01					<0.001			<0.001	<0.001		<0.001	<0.001			<0.003	<0.001	<0.001				<0.001		<0.001	<0.001	0.0023	<0.001
	08/18/15	8260B	<0.001	<0.001	<0.001		<0.002	<0.004	<0.004	<0.01		<0.01					<0.001			<0.001	<0.001		<0.001	<0.001			<0.003	<0.001	<0.001				<0.001		<0.001	<0.001	0.0019	<0.001
	06/08/15	8260B	<0.001	<0.001	<0.001		<0.002	<0.004	<0.004	<0.01		<0.01					<0.001			<0.001	<0.001		<0.001	<0.001			<0.003	<0.001	<0.001				<0.001		<0.001	<0.001	0.0017	<0.001
	03/12/15	8260B	<0.001	<0.001	<0.001		<0.002	<0.004	<0.004	<0.01		<0.01					<0.001			<0.001	<0.001		<0.001	<0.001			<0.003	<0.001	<0.001				<0.001		<0.001	<0.001	0.0012	<0.001
	11/17/14	8260B	<0.001	<0.001	<0.001		<0.002	<0.004	<0.004	<0.01		<0.01					<0.001			0.0015	<0.001		<0.001	<0.001			<0.003	<0.001	<0.001				<0.001		<0.001	<0.001	0.0014	<0.001
	09/24/14	8260B	<0.001	<0.001	<0.001		<0.002	<0.004	<0.004	<0.01		<0.01					<0.001			<0.001	0.0011		<0.001	<0.001			<0.003	<0.001	<0.001				<0.001		<0.001	<0.001	0.0022	<0.001
	04/09/14	8260B	<0.002	<0.002	<0.002		<0.004	<0.008	<0.008	<0.02		<0.02					<0.002			<0.002	0.0028		<0.002	<0.001			<0.006	<0.002	<0.002				<0.002		<0.002	<0.002	0.0029	*<0.002**
MKTF-35	10/29/19	8260B/8011/504.1/EDB	<0.001	<0.001	<0.001	<0.0000095	<0.002	<0.004	<0.004	<0.01	<0.003	<0.01	<0.001				<0.001		0.0041	0.00068	<0.001		0.00043	<0.001		<0.003	<0.003	0.00029	0.0013	<0.001	<0.001	<0.001		<0.001	<0.001	<0.001	<0.001
	08/19/19	8260B/8011/504.1/EDB	0.00031	<0.001	<0.001	<0.0000095	<0.002	<0.004	<0.004	0.0054	<0.003	<0.01	0.00066				<0.001		0.0059	<0.001	<0.001		0.00081	<0.001		<0.003	<0.003	0.00081	0.0014	<0.001	0.0003	<0.001		<0.001	<0.001	<0.001	<0.001
	05/16/19	8260B/8011/504.1/EDB	0.00025	<0.001	<0.001	<0.0000094	<0.002	0.0005	<0.004	<0.01	<0.003	<0.01	0.00035				<0.001		0.0047	<0.001	<0.001		0.00067	<0.001		<0.003	<0.003	0.00054	0.0013	<0.001	<0.001	<0.001		<0.001	<0.001	<0.001	<0.001
	03/26/19	8260B/8011/504.1/EDB	0.00031	<0.001	0.00034	<0.0000095	<0.002	<0.004	<0.004	<0.01	<0.003	<0.01	0.00041				<0.001		0.0056	0.00052	<0.001		0.00048	<0.001		<0.003	<0.003	0.0005	0.0013	<0.001	<0.001	<0.001		<0.001	<0.001	<0.001	<0.001
	11/28/18	8260B/8011/504.1/EDB	<0.001	<0.001	<0.001	<0.0000094	<0.002	<0.004	<0.004	<0.01	<0.003	<0.01	0.00033				<0.001		0.004	0.00066	<0.001		0.00034	<0.001		<0.003	<0.003	<0.001	0.0012	<0.001	0.00024	<0.001		<0.001	<0.001	<0.001	<0.001
	08/23/18	8260B/8011/504.1/EDB	<0.001	<0.001	<0.001	<0.0000093	<0.002	<0.004	<0.004	<0.01	<0.003	<0.01	0.00045				<0.001		0.0046	0.00074	<0.001		0.00028	0.001		<0.003	<0.003	<0.001	0.0014	<0.001	<0.001	<0.001		<0.001	<0.001	<0.001	<0.001
	05/03/18	8260B/8011/504.1/EDB	<0.001	<0.001	<0.001	<0.0000095	0.00069	0.00087	0.00091	<0.01	<0.003	<0.01	0.00056				<0.001		0.0056	0.00081	<0.001		0.00047	<0.001		<0.003	<0.003	0.00035	0.0019	<0.001	0.00015	<0.001		<0.001	<0.001	<0.001	<0.001
	02/15/18	8260B/8011/504.1/EDB	<0.001	<0.001	<0.001	<0.0000094	<0.002	<0.004	<0.004	0.00086	<0.003	<0.01	0.00049				<0.001		0.0039	0.00094	<0.001		0.00049	<0.001		<0.003	0.0003	0.00044	0.0015	<0.001	<0.001	<0.001		<0.001	<0.001	<0.001	<0.001
	11/30/17	8260B	<0.001	<0.001	<0.001	*<0.001**	<0.002	<0.004	<0.004	<0.01	<0.003	<0.01	0.00052				<0.001		0.0038	0.00086	<0.001		0.00048	<0.001		<0.003	<0.003	0.00026	0.0015	<0.001	0.00024	<0.001		<0.001	<0.001	<0.001	<0.001
	09/27/17	8260B	<0.001	<0.001	<0.001	*<0.001**	<0.002	<0.004	<0.004	0.01	<0.003	<0.01	0.00043				<0.001		0.0028	0.00067	<0.001		0.00037	<0.001		<0.003	<0.003	0.00013	0.0012	<0.001	0.00014	<0.001		<0.001	<0.001	<0.001	<0.001
	06/14/17	8260B/8011/504.1/EDB	<0.001	<0.001	<0.001	*<0.001**	0.00031	<0.004	<0.004	<0.01	<0.003	<0.01	0.0004				<0.001		0.0023	0.00043	<0.001		0.0011	<0.001		0.00011	0.00019	0.0027	0.0014	<0.001	<0.001	<0.001		<0.001	<0.001	<0.001	<0.001
	03/01/17	8260B	<0.001	<0.001	<0.001	*<0.001**	0.00018	0.00044	0.00032	<0.01	<0.003	<0.01	0.00051				<0.001		0.0017	<0.001	<0.001		0.0014	0.00016		0.00066	<0.003	0.0038	0.002	<0.001	<0.001	<0.001		<0.001	<0.001	<0.001	<0.001
	11/06/16	8260B	0.018	0.00032	<0.001	*<0.01**	0.0028	0.0016	<0.004	<0.01	<0.003	<0.01	0.0012				<0.001		0.0028	<0.001	<0.001		0.0039	0.00049			0.00045	0.011	0.0021	<0.001	0.00025	<0.001		<0.001	<0.001	<0.001	<0.001
	09/13/16	8260B/8011/504.1/EDB	0.0036	0.00032	<0.001	*<0.01**	0.0011	0.0026	0.00093	0.0081	0.0011	0.0088	0.0011				<0.001		0.0036	<0.001	<0.001		0.0012	0.00029			0.00032	0.0025	0.0014	0.00025	0.00018	<0.001		<0.001	<0.001	<0.001	<0.001
	06/10/16	8260B	0.0012	0.0002	<0.001	*<0.001**	<0.002	<0.004	<0.004	0.0068		0.002	0.00069				<0.001		0.0056	0.00045	<0.001		0.0018	0.00041			0.00053	0.0045	0.0019		0.00019	<0.001		<0.001	<0.001	<0.001	<0.001
	02/26/16	8260B	0.011	<0.005	*<0.005**	*<0.005**	<0.01	*<0.02**	<0.02	<0.05		<0.05					<0.005		0.0052	<0.005	<0.005		0.0034	<0.005			0.0016	0.012	0.0024		<0.005	*<0.005**		<0.005	*<0.005**	*<0.005**	*<0.005**
	11/03/15	8260B	0.009	<0.001	<0.001		0.002	<0.004	<0.004	<0.01		<0.01					<0.00		0.0031	0.0013	<0.001		0.0055	<0.001			<0.003	0.016	0.0026			<0.001		<0.001	<0.001	<0.001	<0.001
	08/18/15	8260B	0.022	<0.005	*<0.005**		<0.01	*<0.02**	<0.02	<0.05		<0.05					<0.005			<0.005	<0.005		0.01	<0.005			<0.015	0.036	<0.005			*<0.005**		<0.005	*<0.005**	*<0.005**	*<0.005**
	06/04/15	8260B	0.0095	0.0023	<0.001		0.0039	0.0042	<0.004	<0.01		<0.01					<0.001			<0.001	<0.001		0.0084	<0.001			<0.003	0.022	0.0017			<0.001		<0.001	<0.001	<0.001	<0.001
	03/17/15	8260B	0.034	0.046	<0.001		**0.036**	0.0077	0.0063	<0.01		<0.01					<0.001			<0.001	<0.001		0.0082	<0.001			<0.003	0.035	0.0018			<0.001		<0.001	<0.001	<0.001	<0.001
	11/21/14	8260B	**0.12**	0.05	<0.001		**0.04**	**0.038**	**0.059**	<0.01		<0.01					<0.001			<0.001	<0.001		0.0051	<0.001			0.0061	0.028	0.0027			<0.001		<0.001	<0.001	<0.001	<0.001
MKTF-36	11/06/19	--	SPH Detected - No samples were collected.																																		
	08/19/19	--	Well paved over and inaccessible - no samples were collected																																		
	05/14/19	--	Well paved over and inaccessible - no samples were collected																																		
	03/25/19	--	Well paved over and inaccessible - no samples were collected																																		
	11/29/18	--	Well paved over and inaccessible - no samples were collected																																		
	09/05/18	8260B/8011/501.1	0.039	<0.05	*<0.05**	<0.0000093	**0.63**	**0.35**	**0.49**	<0.5		<0.5					<0.05			*<0.05**	*<0.05**		0.036	<0.05			<0.15	0.08	<0.05			*<0.05**		<0.05	*<0.05**	*<0.05**	*<0.05**
	05/03/18	8260B/8011/504.1	0.042	0.0057	*<0.05**	<0.0000096	**0.67**	**0.4**	**0.54**	<0.5		<0.5					<0.05			*<0.05**	*<0.05**		0.043	<0.05			0.013	0.09	0.007			*<0.05**		<0.05	*<0.05**	*<0.05**	*<0.05**
	02/15/18	8260B/8011/504.1	0.039	0.0048	*<0.05**	<0.0000094	**0.6**	**0.34**	**0.46**	<0.5		<0.5					<0.05			*<0.05**	*<0.05**		0.035	<0.05			0.011	0.074	<0.05			*<0.05**		<0.05	*<0.05**	*<0.05**	*<0.05**
	11/30/17	8260B	**0.064**	0.014	*<0.05**	*<0.05**	**0.69**	**0.44**	**0.55**	<0.5		<0.5					<0.05			*<0.05**	*<0.05**		0.04	<0.05			0.018	0.083	0.011			*<0.05**		<0.05	*<0.05**	*<0.05**	*<0.05**
	09/27/17	8260B	0.023	<0.05	*<0.05**	*<0.05**	**0.6**	**0.38**	**0.45**	<0.5		<0.5					<0.05			*<0.05**	*<0.05**		0.032	<0.05			0.011	0.067	0.0064			*<0.05**		<0.05	*<0.05**	*<0.05**	*<0.05**
	06/14/17	8260B	**0.12**	0.024	*<0.05**	*<0.05**	**0.53**	**0.34**	**0.39**	<0.5		<0.5					<0.05			*<0.05**	*<0.05**		0.028	<0.05			0.0076	0.085	<0.05			*<0.05**		<0.05	*<0.05**	*<0.05**	*<0.05**
	03/01/17	8260B	0.019	<0.05	*<0.05**	*<0.05**	**0.62**	**0.36**	**0.48**	<0.5		<0.5					<0.05			*<0.05**	*<0.05**		0.031	<0.05			<0.15	0.078	0.018			*<0.05**		<0.05	*<0.05**	*<0.05**	*<0.05**
	11/08/16	8260B	**0.06**	0.013	*<0.01**	*<0.01**	**0.7**	**0.4**	**0.48**	<0.1		<0.1					<0.01			<0.01	*<0.01**		0.028	<0.01			0.008	0.064	0.0058			*<0.01**		<0.01	*<0.01**	*<0.01**	*<0.01**
	09/13/16	--	SPH Detected - No samples were collected.																																		
	06/10/16	--	SPH Detected - No samples were collected.																																		
	03/17/16	--	SPH Detected - No samples were collected.																																		
	11/03/15	--	SPH Detected - No samples were collected.																																		
	08/18/15	8260B	0.032	<0.01	*<0.01**		**0.82**	**0.38**	**0.65**	<0.1		<0.1					<0.01			<0.01	*<0.01**		0.033	<0.01			<0.03	0.073	<0.01			*<0.01**		<0.01	*<0.01**	*<0.01**	*<0.01**
	06/04/15	8260B	**0.065**	<0.02	*<0.02**		**0.58**	**0.34**	**0.58**	<0.2		<0.2					<0.02			<0.02	*<0.02**		0.044	<0.02			<0.06	0.091	<0.02			*<0.02**		<0.02	*<0.02**	*<0.02**	*<0.02**
	03/17/15	8260B	0.031	<0.01	*<0.01**		**0.43**	**0.26**	**0.51**	<0.1		<0.1					<0.01			<0.01	*<0.01**		0.03	<0.01			<0.03	0.081	<0.01			*<0.01**		<0.01	*<0.01**	*<0.01**	*<0.01**
	11/21/14	8260B	**0.27**	**0.062**	*<0.01**		**0.59**	**0.34**	**0.53**	<0.1		<0.1					*<0.1**			*<0.1**	*<0.1**		0.041	<0.1			<0.03	0.099	<0.01			*<0.01**		<0.01	*<0.01**	*<0.01**	*<0.01**

8.17.5 MKTF WELLS

Volatile Organic Compounds Analytical Results

			PARAMETERS																																		
		STANDARDS	1,2,4-Trimethyl benzene (mg/L)	1,3,5-Trimethyl benzene (mg/L)	1,2-Dichloro ethane (EDC) (mg/L)	1,2-Dibro moethane (EDB) (mg/L)	Naphtha-lene (mg/L)	1-Methyl naphtha-lene (mg/L)	2-Methyl naphtha-lene (mg/L)	Acetone (mg/L)	Bromo methane (mg/L)	(Methyl ethyl ketone) 2-Butanone (mg/L)	Chloro benzene (mg/L)	Chloro-ethane (mg/L)	Chloro-form (mg/L)	Chloro-methane (mg/L)	cis-1,2-DCE (mg/L)	1,2-Dichloro benzene (mg/L)	1,4-Dichloro benzene (mg/L)	1,1-Dichloro ethane (mg/L)	1,1-Dichloro ethene (mg/L)	1,2-Dichloro propane (mg/L)	2-Hexanone (mg/L)	Isopropyl benzene (mg/L)	4-Isopropyl toluene (mg/L)	4-Methyl-2-pen-tanone (mg/L)	Methylene Chloride (mg/L)	n-Butyl benzene (mg/L)	n-Propyl benzene (mg/L)	sec-Butyl benzene (mg/L)	Styrene (mg/L)	tert-Butyl benzene (mg/L)	Tetra-chloro ethene (PCE) (mg/L)	1,2,4-Trichloro-benzene (mg/L)	1,1,1-Trichloro ethane (mg/L)	1,1,2-Trichloro ethane (mg/L)	Trichloro ethene (TCE) (mg/L)	Vinyl Chloride (mg/L)
		WQCC 20 NMAC 6.2.3103 (DEC 2018)	NE	NE	0.005	0.00005	0.03	NE	NE	NE	NE	NE	NE	NE	0.1	NE	0.07	0.6	0.075	0.025	0.007	0.005	NE	NE	NE	NE	0.005	NE	NE	NE	0.1	NE	0.005	0.07	0.2	0.005	0.005	0.002
		40 CFR 141.61 MCL	NE	NE	0.005	0.00005	NE	NE	NE	NE	NE	NE	NE	NE	NE	NE	0.07	NE	0.075	NE	0.007	0.005	NE	NE	NE	NE	0.005	NE	NE	NE	0.1	NE	0.005	0.07	0.2	0.005	0.005	0.002
		NMED Tap Water (JUNE 2019)	NE	NE	0.0017	0.0000747	0.00165	0.0114	0.035	14.06	0.0075	5.56	0.0776	20.86	0.00229	0.0203	0.0365	NE	0.0048	0.0275	0.284	0.00437	NE	0.447	NE	1.24	0.106	NE	NE	NE	1.21	NE	NE	0.00398	8	0.00042	0.00259	0.00032
		EPA RSL for Tap Water (NOVEMBER 2019)	0.056	0.06	0.00017	0.0000075	0.00017	0.0011	0.036	14	0.0075	5.6	0.078	21	0.00022	0.19	0.036	0.3	0.00048	0.0028	0.28	0.00085	0.038	NE	NE	6.3	0.011	1	0.66	2	1.2	0.69	0.011	0.0012	8	0.00028	0.00049	0.000019
Well ID	DATE SAMPLED	METHOD																																			
MKTF-37	10/28/19	--	SPH Detected - No samples were collected.																																		
	08/23/19	--	SPH Detected - No samples were collected.																																		
	05/16/19	--	SPH Detected - No samples were collected.																																		
	03/26/19	8260B/8011/504.1	1.1	0.18	0.02	0.000082	0.86	0.18	0.25										0.015	0.028	0.079		0.084	<0.05			<0.15	0.14	0.022				<0.05		0.19	<0.05*
	08/23/18	8260B/8011/504.1	0.53	0.035	0.014	0.000067	0.31	0.051	0.06										0.0082	0.024	0.076		0.067	0.0063			0.034	0.088	0.013				0.0055		0.2	<0.01*
	05/03/18	8260B/8011/504.1	0.63	0.036	<0.01*	0.00045	0.37	0.075	0.08										0.012	0.018	0.067		0.084	0.0074			0.04	0.1	0.015				0.0044		0.19	<0.01*
	02/15/18	--	SPH Detected - No samples were collected.																																		
	11/30/17	--	SPH Detected - No samples were collected.																																		
	09/27/17	--	SPH Detected - No samples were collected.																																		
	06/14/17	--	SPH Detected - No samples were collected.																																		
	03/01/17	8260B	0.77	0.1	0.0083	<0.005*	0.49	0.15	0.2										<0.005	0.016	0.095		0.082	0.0064			0.049	0.11	0.015				0.024		0.21	<0.005*
	11/03/16	8260B	0.47	0.07	0.0093	<0.01*	0.38	0.066	0.081	<0.1		0.035					<0.01		0.0071	0.026	0.11		0.073	0.0055			0.027	0.078	0.011			<0.01*	0.0081	<0.01*	0.2	<0.01*
	08/19/15	8260B	0.88	0.27	0.013	<0.02*	1.5	0.15	0.3	<0.1		<0.1					<0.01			0.018	0.1		0.2	0.017			0.11	0.18	0.035			<0.02*	1.013	<0.02*	1.27	<0.02*
	06/04/15	8260B	0.95	0.33	0.011	<0.01*	0.72	0.15	0.27	<0.01		<0.1					<0.01			0.015	0.1		0.15	0.021			0.14	0.19	0.045			<0.01*	0.019	<0.01*	0.17	<0.01*
	03/17/15	8260B	0.24	0.11	0.0091	<0.001*	0.088	0.03	0.038	<0.01		<0.01					<0.001			0.018	0.081		0.047	0.0045			0.02	0.056	0.0073			<0.001	0.0087	0.0022	0.12	<0.001
	11/21/14	8260B	0.51	0.14	0.017	0.0015 [1]	0.35	0.047	0.084	<0.01		<0.01					<0.001			0.034	0.21		0.078	0.0048			0.026	0.082	0.011			<0.001	<0.001	0.0017	0.3	<0.001
MKTF-38	12/03/19	8260B	<0.001	<0.001	<0.001	<0.001*	<0.002	<0.004	<0.004	<0.01	<0.003	<0.01			0.00052		<0.001		<0.001	<0.001	<0.001		<0.001	<0.001		<0.003	<0.003	<0.001	<0.001		<0.001	0.00028	<0.001	<0.001	<0.001	<0.001	<0.001
	08/20/19	8290B	<0.001	<0.001	<0.001	<0.001*	<0.002	<0.004	<0.004	<0.01	<0.003	<0.01			0.00036		<0.001		<0.001	<0.001	<0.001		<0.001	<0.001		<0.003	<0.003	<0.001	<0.001		<0.001	0.00044	<0.001	<0.001	<0.001	0.00025	<0.001
	06/27/19	8260B	<0.001	<0.001	<0.001	<0.001*	<0.002	<0.004	<0.004	<0.01	<0.003	<0.01			0.0011		<0.001		<0.001	<0.001	<0.001		<0.001	<0.001		<0.003	<0.003	<0.001	<0.001		<0.001	0.00079	<0.001	<0.001	<0.001	<0.001	<0.001
	05/14/19	8260B	<0.001	<0.001	<0.001	<0.001*	<0.002	<0.004	<0.004	0.0064	<0.003	<0.01			0.00079		<0.001		<0.001	<0.001	<0.001		<0.001	<0.001		<0.003	<0.003	<0.001	<0.001		<0.001	0.00045	<0.001	<0.001	<0.001	<0.001	<0.001
	03/26/19	8260B	<0.001	<0.001	<0.001	<0.001*	<0.002	<0.004	<0.004	0.0033	<0.003	<0.01			0.0015		<0.001		<0.001	<0.001	<0.001		<0.001	<0.001		0.00059	<0.003	<0.001	<0.001		<0.001	0.0006	<0.001	<0.001	<0.001	<0.001	<0.001
	11/20/18	8260B	<0.001	<0.001	<0.001	<0.001*	0.00094	0.003	0.0013	<0.01	<0.003	<0.01			0.00031		<0.001		<0.001	0.00023	<0.001		<0.001	<0.001			<0.003	<0.001	<0.001		0.00016	0.00043	<0.001	<0.001	<0.001	<0.001	<0.001
	08/21/18	8260B	<0.001	<0.001	<0.001	<0.001*	<0.002	<0.004	<0.004	0.0037	<0.003	<0.01			<0.001		<0.001		<0.001	<0.001	<0.001		<0.001	<0.001			<0.003	<0.001	<0.001		<0.001	<0.001	<0.001	<0.001	<0.001	<0.001	<0.001
	05/03/18	8260B	<0.001	<0.001	<0.001	<0.001*	<0.002	<0.004	<0.004	<0.01	<0.003	<0.01			<0.001		<0.001		<0.001	<0.001	<0.001		<0.001	<0.001			<0.001	<0.001	<0.001		<0.001	0.00015	<0.001	<0.001	<0.001	<0.001	<0.001
	02/12/18	8260B	0.00015	<0.001	<0.001	<0.001*	<0.002	0.00053	0.00055	<0.01	<0.003	<0.01			<0.001		<0.001		<0.001	<0.001	<0.001		<0.001	<0.001			<0.001	<0.001	<0.001		<0.001	0.00015	<0.001	<0.001	<0.001	<0.001	<0.001
	11/30/17	8260B	<0.001	<0.001	<0.001	<0.001*	<0.002	<0.004	<0.004	<0.01	<0.003	<0.01			<0.001		<0.001		<0.001	<0.001	<0.001		<0.001	<0.001			<0.003	<0.001	<0.001		0.00016	0.00019	<0.001	<0.001	<0.001	<0.001	<0.001
	09/28/17	8260B	<0.001	<0.001	<0.001	<0.001*	<0.002	<0.004	<0.004	0.0058	<0.003	<0.01			<0.001		<0.001		<0.001	<0.001	<0.001		<0.001	<0.001			<0.003	<0.001	<0.001		<0.001	<0.001	<0.001	<0.001	<0.001	<0.001	<0.001
	06/21/17	8260B	<0.001	<0.001	<0.001	<0.001*	<0.002	<0.004	<0.004	0.0033	<0.003	<0.01			<0.001		<0.001		<0.001	<0.001	<0.001		<0.001	<0.001			<0.003	<0.001	0.00089		0.00022	0.00016	<0.001	<0.001	<0.001	<0.001	<0.001
	03/14/17	8260B	<0.001	<0.001	<0.001	<0.001*	0.00014	<0.004	<0.004	0.0017	<0.003	<0.01			0.00016		0.00088		<0.001	0.001	0.00019		<0.001	<0.001			<0.003	<0.001	<0.001		<0.001	0.00058	<0.001	<0.001	<0.001	<0.001	<0.001
	11/01/16	8260B	0.00012	<0.001	<0.001	<0.001*	<0.002	<0.004	<0.004	<0.01	<0.003	<0.01			0.00013		0.0024		0.00037	0.0029	0.00053		<0.001	<0.001			<0.003	0.00021	<0.001			0.0002	0.0002	<0.001	<0.001	0.00022	<0.001
	09/13/16	8260B	<0.001	<0.001	<0.001	<0.001*	<0.002	0.00079	0.00058	<0.01	0.0011	<0.01					0.0018			0.0021	0.00049		<0.001	<0.001			<0.003	<0.001	<0.001			0.00021		<0.001	<0.001	0.0002	<0.001
	06/08/16	8260B	<0.001	<0.001	<0.001	<0.001*	<0.002	0.0052	0.0043	<0.01		<0.01					0.0023			0.0022	0.00039		<0.001	<0.001			<0.003	<0.001	<0.001			0.0009		<0.001	<0.001	0.00023	0.00067
	02/29/16	8260B	<0.001	<0.001	<0.001	<0.001*	<0.002	<0.004	<0.004	<0.01		<0.01					0.0013			0.00073	0.00011		<0.001	<0.001			<0.003	<0.001	<0.001			0.0011		<0.001	<0.001	<0.001	0.00037
	11/09/15	8260B	<0.001	<0.001	<0.001		<0.002	<0.004	<0.004	<0.01		<0.01					<0.001			<0.001	<0.001		<0.001	<0.001			<0.003	<0.001	<0.001			<0.001		<0.001	<0.001	<0.001	<0.001
	08/24/15	8260B	<0.001	<0.001	<0.001		<0.002	<0.004	<0.004	<0.01		<0.01					<0.001			<0.001	<0.001		<0.001	<0.001			<0.003	<0.001	<0.001			<0.001		<0.001	<0.001	<0.001	<0.001
	06/10/15	8260B	<0.001	<0.001	<0.001		<0.002	<0.004	<0.004	<0.01		<0.01					<0.001			<0.001	<0.001		<0.001	<0.001			<0.003	<0.001	<0.001			<0.001		<0.001	<0.001	<0.001	<0.001
	03/16/15	8260B	<0.001	<0.001	<0.001		<0.002	<0.004	<0.004	<0.01		<0.01					<0.001			<0.001	<0.001		<0.001	<0.001			<0.003	<0.001	<0.001			<0.001		<0.001	<0.001	<0.001	<0.001
	11/21/14	8260B	0.0046	0.0015	<0.001		0.0055	0.0088	0.0098	<0.01		<0.01					<0.001			<0.001	<0.001		<0.001	0.0014			<0.003	<0.001	<0.001			<0.001		<0.001	<0.001	0.0011	<0.001
MKTF-39	11/05/19	8260B	0.0017	0.00026	<0.001	<0.001*	0.020	0.12	0.005	<0.01	<0.003	<0.01			<0.001		<0.001	<0.001		0.00049	<0.001		0.019	0.00098		<0.003	0.0055	0.026	0.013		0.00045	<0.001		<0.001	<0.001	<0.001	<0.001
	08/20/19	8290B	0.0033	<0.005	<0.005*	<0.005*	0.014	0.11	0.0041	<0.05	<0.015*	<0.05			<0.005		<0.005	<0.005		<0.005	<0.005		0.017	<0.005		<0.015*	0.004	0.02	0.0093		<0.005	<0.005*		<0.005	<0.005*	<0.005*	<0.005*
	06/05/19	8260B	0.021	0.0043	<0.001	<0.001*	0.033	0.15	0.085	<0.01	<0.003	<0.01			<0.001		<0.001	<0.001		0.00041	<0.001		0.015	0.002		<0.003	0.0062	0.019	0.0082		0.00021	<0.001		<0.001	<0.001	<0.001	0.00044
	03/28/19	--	Located within barricaded area - not accessible to collect samples																																		
	11/20/18	8260B	0.0014	<0.001	<0.001	<0.001*	0.066	0.11	0.056	<0.01	<0.003	<0.01			<0.001		0.00047	<0.001		0.00063	0.00022		0.014	0.00036		<0.003	0.0048	0.019	0.01		0.00038	<0.001		<0.001	<0.001	<0.001	0.0011
	08/21/18	8260B	0.0042	<0.001	<0.001	<0.001*	0.099	0.2	0.089	<0.01	<0.003	<0.01			<0.001		0.00076	<0.001		0.00091	0.00046		0.022	0.01		<0.003	0.0078	0.028	0.013		0.00039	<0.001		<0.001	<0.001	<0.001	0.0014
	05/06/18	8260B	0.0083	<0.005	<0.005*	<0.005*	0.098	0.19	0.077	<0.05	<0.015*	<0.05			<0.005		<0.005	0.00062		<0.005	<0.005		0.025	0.0025		<0.015*	0.009	0.035	0.018		0.00063	<0.005*		<0.005	<0.005*	<0.005*	<0.005*
	02/08/18	8260B	0.0086	<0.005	<0.005*	<0.005*	0.09	0.17	0.07	<0.05	<0.015*	<0.05			<0.005		<0.005	0.00056		<0.005	<0.005		0.021	0.0022		<0.015*	0.0076	0.027	0.014		0.00067	<0.005*		<0.005	<0.005*	<0.005*	0.00093
	11/28/17	8260B	0.01	<0.005	<0.005*	<0.005*	0.11	0.22	0.093	<0.05	<0.015*	<0.05			<0.005		<0.005			<0.005	<0.005		0.022	0.0033		<0.015*	0.0085	0.031	0.015		0.001	<0.005*		<0.005	<0.005*	<0.005*	0.00096
	09/28/17	8260B	0.008	<0.005	<0.005*	<0.005*	0.11	0.17	0.066	<0.05	<0.015*	<0.05			<0.005		<0.005			0.002	<0.005		0.022	0.003		<0.015*	0.0077	0.03	0.013		<0.005	<0.005*		<0.005	<0.005*	<0.005*	0.0019
	06/08/17	8260B	0.029	<0.005	<0.005*	<0.005*	0.11	0.24	0.098	<0.05	<0.015*	<0.05			<0.005		<0.005			<0.005	<0.005		0.028	0.0082		<0.015*	0.016	0.04	0.025		0.00067	<0.005*		<0.005	<0.005*	<0.005*	<0.005*
	03/14/17	8260B	0.027	<0.005	<0.005*	<0.005*	0.11	0.27	0.1	<0.05	<0.015*	<0.05			<0.005		<0.005			<0.005	<0.005		0.03	0.0087		<0.015*	0.016	0.043	0.027		0.00082	<0.005*		<0.005	<0.005*	<0.005*	<0.005*
	11/01/16	8260B	0.024	<0.005	<0.005*	<0.005*	0.086	0.15	0.049	<0.05	<0.015*	<0.05			<0.005		<0.005			<0.005	<0.005		0.023	0.0054		<0.015*	0.0076	0.028	0.012		0.00072	<0.005*		<0.005	<0.005*	<0.005*	<0.001
	09/13/16	8260B	0.039	<0.005	<0.005*	<0.005*	0.08	0.16	0.056	<0.05	0.0046	<0.05			<0.005		0.0014			<0.005	<0.005		0.025	0.0079		<0.015*	0.01	0.031	0.016		0.00071	<0.005*		<0.005	<0.005*	<0.005*	0.003
	06/08/16	8260B	0.082	0.00021	<0.001	<0.001*	0.097	0.19	0.075	<0.01		<0.01			<0.001		0.00086			0.00099	0.00048		0.024	0.008		<0.003	0.01	0.033	0.015		<0.001	<0.001		<0.001	<0.001	<0.001	0.0021
	03/03/16	8260B	0.066	<0.001	<0.001	<0.001*	73	0.14	0.053	<0.01		<0.01			0.00017		0.00078			0.0011	0.00032		0.024	0.0074		0.00019	0.0074	0.03	0.013		0.00036	<0.001		<0.001	<0.001	<0.001	0.0024
	11/09/15	8260B	0.085	<0.001	<0.001		0.11	0.18	0.063	<0.01		<0.01			<0.001		<0.001			<0.001	<0.001		0.024	0.0084		<0.003	0.0066	0.027	0.012			<0.001		<0.001	<0.001	<0.001	<0.001
	08/23/15	8260B	0.098	<0.001	<0.001		0.1	0.11	0.04	<0.01		<0.01			<0.001		<0.001			<0.001	<0.001		0.02	0.0073		<0.003	0.0038	0.023	0.0097			<0.001		<0.001	<0.001	<0.001	<0.001
	06/10/15	8260B	0.12	<0.002	<0.002		0.096	0.13	0.066	<0.02		<0.02			<0.002		<0.002			<0.002	<0.002		0.02	0.0081		<0.006*	0.0071	0.028	0.012			<0.002		<0.002	<0.002	<0.002	<0.002*
	03/16/15	8260B	0.064	<0.002	<0.002		0.044	0.091	0.013	<0.02		<0.02			0.0022		<0.002			<0.002	<0.002		0.011	0.0052		0.0063	<0.006	0.014	0.0057			<0.002		<0.002	<0.002	<0.002	<0.002*
	11/18/14	8260B	0.043	<0.005	<0.005*		0.12	0.17	0.13	<0.05		<0.05					<0.005			<0.005	<0.005		0.015	<0.005			<0.015	0.019	0.0055			<0.005*		<0.005	<0.005*	<0.005*	<0.005*

8.17.5 MKTF WELLS

Volatile Organic Compounds Analytical Results

			PARAMETERS																																			
		STANDARDS	1,2,4-Trimethylbenzene (mg/L)	1,3,5-Trimethylbenzene (mg/L)	1,2-Dichloroethane (EDC) (mg/L)	1,2-Dibromoethane (EDB) (mg/L)	Naphthalene (mg/L)	1-Methylnaphthalene (mg/L)	2-Methylnaphthalene (mg/L)	Acetone (mg/L)	Bromomethane (mg/L)	(Methyl ethyl ketone) 2-Butanone (mg/L)	Chlorobenzene (mg/L)	Chloroethane (mg/L)	Chloroform (mg/L)	Chloromethane (mg/L)	cis-1,2-DCE (mg/L)	1,2-Dichlorobenzene (mg/L)	1,4-Dichlorobenzene (mg/L)	1,1-Dichloroethane (mg/L)	1,1-Dichloroethene (mg/L)	1,2-Dichloropropane (mg/L)	2-Hexanone (mg/L)	Isopropylbenzene (mg/L)	4-Isopropyltoluene (mg/L)	4-Methyl-2-pentanone (mg/L)	Methylene Chloride (mg/L)	n-Butylbenzene (mg/L)	n-Propylbenzene (mg/L)	sec-Butylbenzene (mg/L)	Styrene (mg/L)	tert-Butylbenzene (mg/L)	Tetrachloroethene (PCE) (mg/L)	1,2,4-Trichlorobenzene (mg/L)	1,1,1-Trichloroethane (mg/L)	1,1,2-Trichloroethane (mg/L)	Trichloroethene (TCE) (mg/L)	Vinyl Chloride (mg/L)
		WQCC 20 NMAC 6.2.3103 (DEC 2018)	NE	NE	0.005	0.00005	0.03	NE	NE	NE	NE	NE	NE	NE	0.1	NE	0.07	0.6	0.075	0.025	0.007	0.005	NE	NE	NE	NE	0.005	NE	NE	NE	0.1	NE	0.005	0.07	0.2	0.005	0.005	0.002
		40 CFR 141.61 MCL	NE	NE	0.005	0.00005	NE	NE	NE	NE	NE	NE	NE	NE	NE	NE	0.07	NE	0.075	NE	0.007	0.005	NE	NE	NE	NE	0.005	NE	NE	NE	0.1	NE	0.005	0.07	0.2	0.005	0.005	0.002
		NMED Tap Water (JUNE 2019)	NE	NE	0.0017	0.0000747	0.00165	0.0114	0.035	14.06	0.0075	5.56	0.0776	20.86	0.00229	0.0203	0.0365	NE	0.0048	0.0275	0.284	0.00437	NE	0.447	NE	1.24	0.106	NE	NE	NE	1.21	NE	NE	0.00398	8	0.00042	0.00259	0.00032
		EPA RSL for Tap Water (NOVEMBER 2019)	0.056	0.06	0.00017	0.0000075	0.00017	0.0011	0.036	14	0.0075	5.6	0.078	21	0.00022	0.19	0.036	0.3	0.00048	0.0028	0.28	0.00085	0.038	NE	NE	6.3	0.011	1	0.66	2	1.2	0.69	NE	0.0012	8	0.00028	0.00049	0.000019
Well ID	DATE SAMPLED	METHOD																																				
MKTF-40	10/22/20	8260B/8011/504.1	<0.001	<0.001	0.00044	*<0.0092**	<0.002	<0.004	<0.004	<0.01		<0.01			0.00019		<0.001			0.00076	<0.001		<0.001	<0.001		<0.003	<0.001	<0.001				<0.001		<0.001	<0.001	<0.001	<0.001
	08/22/19	8260B/8011/504.1	<0.001	<0.001	<0.001	<0.0000094	<0.002	<0.004	<0.004	0.0017		<0.01			<0.001		<0.001			0.00078	<0.001		<0.001	<0.001		<0.003	<0.001	<0.001				<0.001		<0.001	<0.001	<0.001	<0.001
	05/06/19	8260B/8011/504.1	<0.001	<0.001	<0.001	<0.0000093	<0.002	<0.004	<0.004	0.0053		<0.01			<0.001		<0.001			0.00066	<0.001		<0.001	<0.001		<0.003	<0.001	<0.001				<0.001		<0.001	<0.001	<0.001	<0.001
	02/20/19	8260B/8011/504.1	<0.001	<0.001	0.00028	<0.0000094	<0.002	<0.004	<0.004	<0.01		<0.01			<0.001		<0.001			0.001	<0.001		<0.001	<0.001		<0.003	<0.001	<0.001				<0.001		<0.001	<0.001	<0.001	<0.001
	11/15/18	8260B/8011/504.1	<0.001	<0.001	0.00024	<0.0000094	<0.002	<0.004	<0.004	<0.01		<0.01			<0.001		<0.001			0.00067	<0.001		<0.001	<0.001		<0.003	<0.001	<0.001				<0.001		<0.001	<0.001	<0.001	<0.001
	08/17/18	8260B/8011/504.1	<0.001	<0.001	<0.001	*<0.000096**	<0.002	<0.004	<0.004	<0.01		<0.01			<0.001		<0.001			0.00082	<0.001		<0.001	<0.001		<0.003	<0.001	<0.001				<0.001		<0.001	<0.001	<0.001	<0.001
	05/06/18	8260B	<0.001	<0.001	<0.001		<0.002	<0.004	<0.004	<0.01		<0.01			<0.001		<0.001			0.00077	<0.001		<0.001	<0.001		<0.001	<0.001	<0.001				<0.001		<0.001	<0.001	<0.001	<0.001
	02/05/18	8260B	<0.001	<0.001	<0.001		<0.002	<0.004	<0.004	0.0027		<0.01			<0.001		<0.001			0.0008	<0.001		<0.001	<0.001		<0.001	<0.001	<0.001				<0.001		<0.001	<0.001	<0.001	<0.001
	11/21/17	8260B	<0.001	<0.001	<0.001		<0.002	<0.004	<0.004	0.0027		<0.01			<0.001		<0.001			0.00059	<0.001		<0.001	<0.001		<0.003	<0.001	<0.001				<0.001		<0.001	<0.001	<0.001	<0.001
	09/25/17	8260B	<0.001	<0.001	<0.001		<0.002	<0.004	<0.004	0.0055		<0.01			<0.001		<0.001			0.00081	<0.001		<0.001	<0.001		<0.003	<0.001	<0.001				<0.001		<0.001	<0.001	<0.001	<0.001
	06/05/17	8260B	<0.001	<0.001	<0.001		<0.002	<0.004	<0.004	0.0046		<0.01			<0.001		<0.001			0.00066	<0.001		<0.001	<0.001		<0.003	<0.001	<0.001				<0.001		<0.001	<0.001	<0.001	<0.001
	03/07/17	8260B	<0.001	<0.001	<0.001		<0.002	<0.004	<0.004	0.0023		<0.01			<0.001		<0.001			0.00062	<0.001		<0.001	<0.001		<0.003	<0.001	<0.001				<0.001		<0.001	<0.001	<0.001	<0.001
	10/31/16	8260B	<0.001	<0.001	0.00037		<0.002	<0.004	<0.004	<0.01		<0.01			0.0002		<0.001			0.00064	<0.001		<0.001	<0.001		<0.003	<0.001	<0.001				<0.001		<0.001	<0.001	<0.001	<0.001
	09/08/16	8260B	<0.001	<0.001	<0.001		<0.002	<0.004	<0.004	<0.01		<0.01			<0.001		<0.001			0.0065	<0.001		<0.001	<0.001		<0.003	<0.001	<0.001				<0.001		<0.001	<0.001	<0.001	<0.001
	06/09/16	8260B	<0.001	<0.001	<0.001		<0.002	<0.004	<0.004	<0.01		<0.01			<0.001		<0.001			0.00062	<0.001		<0.001	<0.001		<0.003	<0.001	<0.001				<0.001		<0.001	<0.001	<0.001	<0.001
	02/23/16	8260B	<0.001	<0.001	0.00037		<0.002	<0.004	<0.004	<0.01		<0.01			0.00019		<0.001			0.00082	<0.001		<0.001	<0.001		<0.003	<0.001	<0.001				<0.001		<0.001	<0.001	<0.001	<0.001
	11/04/15	8260B	<0.001	<0.001	<0.001		<0.002	<0.004	<0.004	<0.01		<0.01					<0.001			<0.001	<0.001		<0.001	<0.001		<0.003	<0.001	<0.001				<0.001		<0.001	<0.001	<0.001	<0.001
	08/21/15	8260B	<0.001	<0.001	<0.001		<0.002	<0.004	<0.004	<0.01		<0.01					<0.001			<0.001	<0.001		<0.001	<0.001		<0.003	<0.001	<0.001				<0.001		<0.001	<0.001	<0.001	<0.001
	06/10/15	8260B	<0.001	<0.001	<0.001		<0.002	<0.004	<0.004	<0.01		<0.01					<0.001			<0.001	<0.001		<0.001	<0.001		<0.003	<0.001	<0.001				<0.001		<0.001	<0.001	<0.001	<0.001
	03/11/15	8260B	<0.001	<0.001	<0.001		<0.002	<0.004	<0.004	<0.01		<0.01					<0.001			<0.001	<0.001		<0.001	<0.001		<0.003	<0.001	<0.001				<0.001		<0.001	<0.001	<0.001	<0.001
	11/21/14	8260B	<0.001	<0.001	<0.001		<0.002	<0.004	<0.004	<0.01		<0.01					<0.001			<0.001	<0.001		<0.001	<0.001		<0.003	<0.001	<0.001				<0.001		<0.001	<0.001	<0.001	<0.001
MKTF-41	10/23/19	8260B/8011/504.1	0.00036	<0.001	0.003	<0.0000093	0.00033	0.00035	<0.004	<0.01		<0.01			0.0002		<0.001			0.0031	0.0038		<0.001	<0.001		<0.003	<0.001	<0.001				<0.001		<0.001	0.00063	<0.001	<0.001
	08/22/19	8260B/8011/504.1	0.00051	<0.001	0.0033	<0.0000095	0.00063	0.00064	0.0007	0.0022		<0.01			<0.001		<0.001			0.0039	0.0053		<0.001	<0.001		<0.003	<0.001	<0.001				<0.001		<0.001	0.00069	<0.001	<0.001
	05/07/19	8260B/8011/504.1	0.00025	<0.001	0.0025	<0.0000094	<0.002	<0.004	<0.004	0.0048		<0.01			<0.001		<0.001			0.003	0.004		<0.001	<0.001		<0.003	<0.001	<0.001				<0.001		<0.001	0.00051	<0.001	<0.001
	02/13/19	8260B/8011/504.1	0.00053	<0.001	0.0037	<0.0000094	0.00092	0.0008	0.00081	0.0012		<0.01			<0.001		<0.001			0.0043	**0.0073**		<0.001	<0.001		<0.003	<0.001	<0.001				<0.001		<0.001	0.00057	<0.001	<0.001
	11/15/18	8260B/8011/504.1	0.00049	<0.001	0.0037	<0.0000094	0.00084	0.00082	0.00078	<0.01		<0.01			<0.001		<0.001			0.0043	0.007		<0.001	<0.001		<0.003	<0.001	<0.001				<0.001		<0.001	0.00061	<0.001	<0.001
	08/29/18	8260B/8011/504.1	0.00032	<0.001	0.00032	<0.0000094	0.00073	0.00075	0.00074	<0.01		<0.01			<0.001		<0.001			0.005	0.0069		<0.001	<0.001		<0.003	<0.001	<0.001				<0.001		<0.001	0.00062	<0.001	<0.001
	05/09/18	8260B/8011/504.1	<0.001	<0.001	0.004	<0.0000094	<0.002	0.00057	0.00051	<0.01		<0.01			<0.001		<0.001			0.0048	**0.0073**		<0.001	<0.001		<0.003	<0.001	<0.001				<0.001		<0.001	0.00079	<0.001	<0.001
	02/07/18	8260B/8011/504.1	0.00012	<0.001	**0.034**	<0.0000095	<0.002	<0.004	<0.004	<0.01		<0.01			<0.001		<0.001			0.0041	0.006		<0.001	<0.001		<0.003	<0.001	<0.001				<0.001		<0.001	0.00071	<0.001	<0.001
	11/27/17	8260B	<0.001	<0.001	0.0028	*<0.001**	<0.002	<0.004	<0.004	0.0017		<0.01			<0.001		<0.001			0.0034	0.0053		<0.001	<0.001		<0.003	<0.001	<0.001				<0.001		<0.001	0.00057	<0.001	<0.001
	09/25/17	8260B	<0.001	<0.001	0.0027	*<0.001**	0.0003	0.0004	0.00039	0.0034		<0.01			<0.001		<0.001			0.0034	0.0043		<0.001	<0.001		<0.003	<0.001	<0.001				<0.001		<0.001	0.00063	<0.001	<0.001
	06/06/17	8260B	<0.001	<0.001	0.0027	*<0.001**	<0.002	<0.004	<0.004	0.0039		<0.01			<0.001		<0.001			0.0034	0.0048		<0.001	<0.001		<0.003	<0.001	<0.001				<0.001		<0.001	0.00047	<0.001	<0.001
	03/07/17	8260B	<0.001	<0.001	0.0026	*<0.001**	<0.002	<0.004	<0.004	0.001		<0.01			<0.001		<0.001			0.0036	0.0053		<0.001	<0.001		<0.003	<0.001	<0.001				<0.001		<0.001	0.00052	<0.001	<0.001
	10/31/16	8260B	<0.001	<0.001	0.0024	*<0.01**	<0.002	<0.004	<0.004	<0.01		<0.01			0.00014		<0.001			0.0027	0.0054		<0.001	<0.001		<0.003	<0.001	<0.001				<0.001		<0.001	0.00055	<0.001	<0.001
	09/09/16	8260B	<0.001	<0.001	0.0024	*<0.01**	<0.002	<0.004	<0.004	<0.01		<0.01					<0.001			0.0025	0.0061		<0.001	<0.001		<0.003	<0.001	<0.001				<0.001		<0.001	0.00053	<0.001	<0.001
	06/09/16	8260B	<0.001	<0.001	0.0022	<0.00001	<0.002	<0.004	<0.004	<0.01		<0.01					<0.001			0.0027	0.0034		<0.001	<0.001		<0.003	<0.001	<0.001				<0.001		<0.001	0.00054	<0.001	<0.001
	02/24/16	8260B	<0.001	<0.001	0.0019	*<0.001**	<0.002	<0.004	<0.004	<0.01		<0.01					<0.001			0.0026	0.0041		<0.001	<0.001		<0.003	<0.001	<0.001				<0.001		<0.001	0.00028	<0.001	<0.001
	11/05/15	8260B	<0.001	<0.001	0.0023		<0.002	<0.004	<0.004	<0.01		<0.01					<0.001			0.0031	0.0038		<0.001	<0.001		<0.003	<0.001	<0.001				<0.001		<0.001	<0.001	<0.001	<0.001
	08/21/15	8260B	<0.001	<0.001	0.0013		<0.002	<0.004	<0.004	<0.01		<0.01					<0.001			0.0018	0.0021		<0.001	<0.001		<0.003	<0.001	<0.001				<0.001		<0.001	<0.001	<0.001	<0.001
	06/09/15	8260B	<0.001	<0.001	0.0013		<0.002	<0.004	<0.004	<0.01		<0.01					<0.001			0.0017	0.0019		<0.001	<0.001		<0.003	<0.001	<0.001				<0.001		<0.001	<0.001	<0.001	<0.001
	03/12/15	8260B	<0.001	<0.001	0.0013		<0.002	<0.004	<0.004	<0.01		<0.01					<0.001			0.0018	0.0016		<0.001	<0.001		<0.003	<0.001	<0.001				<0.001		<0.001	<0.001	<0.001	<0.001
	11/18/14	8260B	<0.001	<0.001	0.002		<0.002	<0.004	<0.004	<0.01		<0.01					<0.001			0.0036	0.0038		<0.001	<0.001		<0.003	<0.001	<0.001				<0.001		<0.001	<0.001	<0.001	<0.001
MKTF-42	10/23/19	8260B/8011/504.1	0.0063	0.0025	0.0023	**0.00026**	0.018	0.007	0.0064	0.015	<0.006	<0.02					<0.002			0.0011	0.0009		<0.02	0.00043	0.00097	<0.02		<0.006	0.0007	<0.002			<0.002		<0.002	<0.002	<0.002	*<0.002**
	08/22/19	8260B/8011/504.1	0.0083	0.003	0.0019	**0.00015**	0.026	**0.013**	0.01	0.019	<0.006	0.0095					<0.002			<0.002	<0.002		<0.02	0.00046	0.0021	<0.02		<0.006	0.00083	<0.002			<0.002		<0.002	<0.002	<0.002	*<0.002**
	05/07/19	8260B/8011/504.1	0.0034	0.0015	0.0016	**0.00022**	0.0096	0.0067	0.0036	0.017	<0.006	0.0049					<0.002			<0.002	<0.002		<0.02	<0.002	0.0019	<0.02		<0.006	<0.002	<0.002			<0.002		<0.002	<0.002	<0.002	*<0.002**
	02/13/19	8260B/8011/504.1	0.022	0.0081	**0.023**	**0.00029**	**0.057**	0.011	0.015	0.014	<0.003	0.0032					<0.001			0.00069	0.0005		<0.01	0.0011	0.00078	0.0066		<0.003	0.0011	<0.001			<0.001		<0.001	<0.001	<0.001	<0.001
	11/15/18	8260B/8011/504.1	**0.068**	0.021	0.0039	**0.0004**	**0.16**	**0.094**	**0.11**	0.015	<0.006	<0.02					<0.002			0.00056	**0.1**		<0.02	0.0036	0.0021	0.0098		0.0016	0.0047	0.0013			<0.002		<0.002	<0.002	<0.002	*<0.002**
	08/29/18	8260B	0.011	0.0046	0.0026	*<0.001**	**0.03**	**0.017**	0.012	0.046	<0.003	0.012					<0.001			<0.001	<0.001		<0.01	0.00071	0.0037	0.0029		<0.003	0.00093	0.00032			<0.001		<0.001	<0.001	<0.001	<0.001
	05/09/18	8260B	0.0086	0.004	0.0022	*<0.001**	0.029	**0.019**	0.01	0.037	<0.003	0.0088					<0.001			<0.001	0.00026		<0.01	0.00055	0.0036	0.0023		<0.003	0.00056	0.00028			<0.001		<0.001	<0.001	<0.001	<0.001
	02/07/18	8260B	0.0065	0.0039	0.002	*<0.001**	0.025	**0.016**	0.0091	0.036	<0.003	0.012					<0.001			<0.001	0.00026		<0.01	0.00051	0.0044	0.0036		0.00043	0.00042	0.0003			<0.001		<0.001	<0.001	<0.001	<0.001
	11/27/17	8260B	0.011	0.0052	0.0013	*<0.001**	**0.037**	**0.016**	0.014	0.03	<0.003	0.0071					<0.001			<0.001	0.00023		0.0026	0.00073	0.0037	0.0034		0.00037	0.00083	0.00026			<0.001		<0.001	<0.001	<0.001	<0.001
	09/25/17	8260B	0.018	0.0065	0.0017	*<0.001**	**0.062**	**0.035**	0.026	0.037	<0.003	0.01					<0.001			<0.001	0.00019		<0.01	0.0011	0.002	<0.01		0.00059	0.0017	0.00046			<0.001		<0.001	<0.001	<0.001	<0.001
	06/06/17	8260B	0.0047	0.0024	0.0015	*<0.001**	0.016	**0.016**	0.0052	0.035	<0.003	0.0099					<0.001			<0.001	<0.001		<0.01	0.00034	0.0032	0.0018		<0.003	0.00037	0.00017			<0.001		<0.001	<0.001	<0.001	<0.001
	03/07/17	8260B	0.004	0.0034	0.0013	*<0.001**	0.024	**0.019**	0.0073	0.028	<0.003	0.009					<0.001			<0.001	<0.001		<0.01	0.00034	0.0031	0.0022		<0.003	0.00028	0.0002			<0.001		<0.001	<0.001	<0.001	<0.001
	10/31/16	8260B	0.0083	0.005	0.0011	*<0.001**	**0.032**	**0.028**	0.013	0.014	<0.003	<0.01					<0.001			<0.001	<0.001		<0.001	<0.001	0.0011	<0.001		<0.003	<0.001	<0.001			<0.001		<0.001	<0.001	<0.001	<0.001
	09/09/16	8260B	0.0066	0.0029	0.00098	*<0.001**	0.026	**0.013**	0.0083	0.031	<0.003	0.0083					<0.001			<0.001	<0.001		0.0022	0.00058	0.0018	0.0032		<0.003	0.00072	0.00041			<0.001		<0.001	<0.001	<0.001	<0.001
	06/09/16	8260B	<0.001	<0.001	<0.001	**0.00012**	<0.002	<0.004	<0.004	<0.01	<0.003	<0.01					<0.001			<0.001	<0.001		<0.01	<0.001	<0.001	<0.01		<0.003	<0.001	<0.001			<0.001		<0.001	<0.001	<0.001	<0.001
	02/24/16	8260B	0.0066	0.0038	0.00079	*<0.001**	0.028	**0.016**	0.011	0.023	0.0016	0.0056					<0.001			<0.001	<0.001		0.0016	0.00031	0.0011	0.0018		<0.003	0.00039	0.00017			<0.001		<0.001	<0.001	<0.001	<0.001
	11/05/15	8260B	0.0083	0.005	0.0011		**0.032**	**0.028**	0.013	0.014		<0.01					<0.001			<0.001	<0.001			<0.001	0.0011	<0.01		<0.003	<0.001	<0.001			<0.001		<0.001	<0.001	<0.001	<0.001
	08/21/15	8260B	0.006	0.0041	<0.001		0.021	**0.016**	0.0079	0.014		<0.01					<0.001			<0.001	<0.001			<0.001	<0.001	<0.01		<0.003	<0.001	<0.001			<0.001		<0.001	<0.001	<0.001	<0.001
	06/09/15	8260B	0.0034	0.0028	<0.001		0.009	0.0075	0.0042	<0.01		<0.01					<0.001			<0.001	<0.001			<0.001	<0.001	<0.01		<0.003	<0.001	<0.001			<0.001		<0.001	<0.001	<0.001	<0.001
	03/11/15	8260B	0.0039	0.0026	<0.001		0.014	0.0075	0.0061	0.01		<0.01					<0.001			<0.001	<0.001			<0.001	<0.001	<0.01		<0.003	<0.001	<0.001			<0.001		<0.001	<0.001	<0.001	<0.001
	11/18/14	8260B	0.027	<0.01	*<0.01**		**0.035**	**0.073**	**0.058**	<0.1		<0.1					<0.01			<0.01	*<0.01**			<0.01	<0.01	<0.01		<0.03	<0.01	<0.01			*<0.01**		<0.01	*<0.01**	*<0.01**	*<0.01**

8.17.5 MKTF WELLS
Volatile Organic Compounds Analytical Results

			PARAMETERS																																			
		STANDARDS	1,2,4-Trimethyl benzene (mg/L)	1,3,5-Trimethyl benzene (mg/L)	1,2-Dichloro ethane (EDC) (mg/L)	1,2-Dibro moethane (EDB) (mg/L)	Naphtha-lene (mg/L)	1-Methyl naphtha-lene (mg/L)	2-Methyl naphtha-lene (mg/L)	Acetone (mg/L)	Bromo methane (mg/L)	(Methyl ethyl ketone) 2-Butanone (mg/L)	Chloro benzene (mg/L)	Chloro-ethane (mg/L)	Chloro-form (mg/L)	Chloro-methane (mg/L)	cis-1,2-DCE (mg/L)	1,2-Dichloro benzene (mg/L)	1,4-Dichloro benzene (mg/L)	1,1-Dichloro ethane (mg/L)	1,1-Dichloro ethene (mg/L)	1,2-Dichloro propane (mg/L)	2-Hexanone (mg/L)	Isopropyl benzene (mg/L)	4-Isopropyl toluene (mg/L)	4-Methyl-2-pen-tanone (mg/L)	Methylene Chloride (mg/L)	n-Butyl benzene (mg/L)	n-Propyl benzene (mg/L)	sec-Butyl benzene (mg/L)	Styrene (mg/L)	tert-Butyl benzene (mg/L)	Tetra-chloro ethene (PCE) (mg/L)	1,2,4-Trichloro-benzene (mg/L)	1,1,1-Trichloro ethane (mg/L)	1,1,2-Trichloro ethane (mg/L)	Trichloro ethene (TCE) (mg/L)	Vinyl Chloride (mg/L)
		WQCC 20 NMAC 6.2.3103 (DEC 2018)	NE	NE	**0.005**	**0.00005**	**0.03**	NE	NE	NE	NE	NE	NE	NE	**0.1**	NE	**0.07**	**0.6**	**0.075**	**0.025**	**0.007**	**0.005**	NE	NE	NE	NE	**0.005**	NE	NE	NE	**0.1**	NE	**0.005**	**0.07**	**0.2**	**0.005**	**0.005**	**0.002**
		40 CFR 141.61 MCL	NE	NE	0.005	0.00005	NE	NE	NE	NE	NE	NE	NE	NE	NE	NE	0.07	NE	0.075	NE	0.007	0.005	NE	NE	NE	NE	0.005	NE	NE	NE	0.1	NE	0.005	0.07	0.2	0.005	0.005	0.002
		NMED Tap Water (JUNE 2019)	NE	NE	0.0017	0.0000747	0.00165	**0.0114**	**0.035**	**14.06**	**0.0075**	**5.56**	**0.0776**	**20.86**	0.00229	**0.0203**	0.0365	NE	0.0048	0.0275	0.284	0.00437	NE	**0.447**	NE	**1.24**	0.106	NE	NE	NE	1.21	NE	NE	0.00398	8	0.00042	0.00259	0.00032
		EPA RSL for Tap Water (NOVEMBER 2019)	**0.056**	**0.06**	0.00017	0.0000075	0.00017	0.0011	0.036	14	0.0075	5.6	0.078	21	0.00022	0.19	0.036	0.3	0.00048	0.0028	0.28	0.00085	**0.038**	NE	NE	6.3	0.011	**1**	**0.66**	**2**	1.2	**0.69**	NE	0.0012	8	0.00028	0.00049	0.000019
Well ID	**DATE SAMPLED**	**METHOD**																																				
MKTF-43	10/24/19	8260B/8011/504.1	<0.001	<0.001	<0.001	*<0.0092**	<0.002	<0.004	<0.004	<0.01		<0.01			0.0006		<0.001			<0.001	<0.001		<0.01	<0.001	<0.001	<0.01		<0.003	<0.001	<0.001			<0.001					
	08/22/19	8260B	<0.001	<0.001	<0.001	*<0.001**	<0.002	0.00082	0.0011	<0.01		<0.01			0.0006		<0.001			<0.001	<0.001		<0.01	<0.001	<0.001	<0.01		<0.003	<0.001	<0.001			<0.001					
	05/08/19	8260B	<0.001	<0.001	<0.001	*<0.001**	<0.002	<0.004	<0.004	<0.01		<0.01			0.00047		<0.001			<0.001	<0.001		<0.01	<0.001	<0.001	<0.01		<0.003	<0.001	<0.001			<0.001					
	02/13/19	8260B	<0.001	<0.001	<0.001	*<0.001**	<0.002	<0.001	<0.001	0.0021		<0.01			0.00078		<0.001			<0.001	<0.001		<0.01	<0.001	<0.001	<0.01		<0.003	<0.001	<0.001			<0.001					
	11/15/18	8260B	0.00061	<0.001	<0.001	*<0.001**	<0.002	<0.004	<0.004	0.0036		<0.01			0.00095		<0.001			<0.001	<0.001		<0.01	<0.001	<0.001	<0.01		<0.003	<0.001	<0.001			<0.001					
	08/30/18	8260B	<0.001	<0.001	<0.001	*<0.001**	<0.002	<0.001	<0.001	0.012		<0.01			<0.001		<0.001			<0.001	<0.001		<0.01	<0.001	<0.001	<0.01		<0.003	<0.001	<0.001			<0.001					
	05/09/18	8260B	<0.001	<0.001	<0.001	*<0.001**	<0.002	<0.001	<0.001	<0.01		<0.01			0.00072		<0.001			<0.001	<0.001		<0.01	<0.001	<0.001	<0.01		<0.003	<0.001	<0.001			<0.001					
	02/07/18	8260B	<0.001	<0.001	<0.001	*<0.001**	<0.002	<0.004	<0.004	<0.01		<0.01			<0.001		<0.001			<0.001	<0.001		<0.01	<0.001	<0.001	<0.01		<0.003	<0.001	<0.001			<0.001					
	11/27/17	8260B	<0.001	<0.001	<0.001	*<0.001**	<0.002	<0.004	<0.004	0.0036		<0.01			<0.001		<0.001			<0.001	<0.001		<0.01	<0.001	<0.001	<0.01		<0.003	<0.001	<0.001			<0.001					
	09/25/17	8260B	<0.001	<0.001	<0.001	*<0.001**	<0.002	<0.004	<0.004	0.0091		<0.01			<0.001		<0.001			<0.001	<0.001		<0.01	<0.001	<0.001	<0.01		<0.003	<0.001	<0.001			<0.001					
	06/06/17	8260B	<0.001	<0.001	<0.001	*<0.001**	<0.002	<0.004	<0.004	0.0054		<0.01			<0.001		<0.001			<0.001	<0.001		<0.01	<0.001	<0.001	<0.01		<0.003	<0.001	<0.001			<0.001					
	03/08/17	8260B	<0.001	<0.001	<0.001	*<0.001**	<0.002	<0.004	<0.004	0.0037		<0.01			0.00016		<0.001			<0.001	<0.001		<0.01	<0.001	<0.001	<0.01		<0.003	<0.001	<0.001			<0.001					
	10/31/16	8260B	0.0053	0.0027	0.0011	*<0.001**	0.024	**0.013**	0.0072	0.03		0.01			<0.001		<0.001			<0.001	<0.001		0.0042	0.00054	0.0023	0.0037		<0.003	0.00068	0.00034			<0.001					
	09/09/16	8260B	<0.001	<0.001	<0.001	*<0.001**	<0.002	<0.004	<0.004	<0.01		<0.01			<0.001		<0.001			<0.001	<0.001			<0.001	<0.001			<0.001	<0.001	<0.001			<0.001					
	06/09/16	8260B	<0.001	<0.001	<0.001	*<0.001**	<0.002	<0.004	<0.004	<0.01		<0.01			<0.001		<0.001			<0.001	<0.001			<0.001	<0.001			<0.001	<0.001	<0.001			<0.001					
	02/24/16	8260B	<0.001	<0.001	<0.001	*<0.001**	<0.002	<0.004	<0.004	0.0023		<0.01			0.00018		<0.001			<0.001	<0.001			<0.001	<0.001			<0.003	<0.001	<0.001			<0.001					
	11/05/15	8260B	<0.001	<0.001	<0.001		<0.002	<0.004	<0.004	<0.01		<0.01					<0.001			<0.001	<0.001			<0.001	<0.001			<0.003	<0.001	<0.001			<0.001					
	08/21/15	8260B	<0.001	<0.001	<0.001		<0.002	0.0059	<0.004	<0.01		<0.01					<0.001			<0.001	<0.001			<0.001	<0.001			<0.003	<0.001	<0.001			<0.001					
	06/10/15	8260B	<0.001	<0.001	<0.001		<0.002	<0.004	<0.004	<0.01		<0.01					<0.001			<0.001	<0.001			<0.001	<0.001			<0.003	<0.001	<0.001			<0.001					
	03/11/15	8260B	<0.001	<0.001	<0.001		<0.002	<0.004	<0.004	<0.01		<0.01					<0.001			<0.001	<0.001			<0.001	<0.001			<0.003	<0.001	<0.001			<0.001					
	11/18/14	8260B	<0.001	<0.001	<0.001		<0.002	<0.004	<0.004	<0.01		<0.01					<0.001			<0.001	<0.001			<0.001	0.0036			<0.003	<0.001	<0.001			<0.001					
MKTF-44	10/24/19	8260B	<0.001	<0.001	<0.001	*<0.001**	<0.002	<0.004	<0.004	<0.01		<0.01					<0.001			<0.001	<0.001			<0.001	<0.001			<0.003	<0.001	<0.001			<0.001		<0.001	<0.001	<0.001	<0.001
	08/22/19	8260B	<0.001	<0.001	<0.001	*<0.001**	<0.002	<0.004	<0.004	<0.01		<0.01					<0.001			<0.001	<0.001			<0.001	<0.001			<0.003	<0.001	<0.001			<0.001		<0.001	<0.001	<0.001	<0.001
	05/08/19	8260B	<0.001	<0.001	<0.001	*<0.001**	<0.002	<0.004	<0.004	<0.01		<0.01					<0.001			<0.001	<0.001			<0.001	<0.001			<0.003	<0.001	<0.001			<0.001		<0.001	<0.001	<0.001	<0.001
	02/13/19	8260B	<0.001	<0.001	<0.001	*<0.001**	<0.002	<0.004	<0.004	0.0014		<0.01					<0.001			<0.001	<0.001			<0.001	<0.001			<0.003	<0.001	<0.001			<0.001		<0.001	<0.001	<0.001	<0.001
	11/28/18	8260B	0.0005	0.00023	<0.001	*<0.001**	<0.002	<0.004	<0.004	<0.01		<0.01					<0.001			<0.001	<0.001			<0.001	<0.001			<0.003	<0.001	<0.001			<0.001		<0.001	<0.001	<0.001	<0.001
	08/30/18	8260B	<0.001	<0.0001	<0.001	*<0.001**	<0.002	<0.004	<0.004	0.0081		<0.01					<0.001			<0.001	<0.001			<0.001	<0.001			<0.003	<0.001	<0.001			<0.001		<0.001	<0.001	<0.001	<0.001
	05/10/18	8260B	<0.001	<0.0001	<0.001	*<0.001**	<0.002	<0.004	<0.004	<0.01		<0.01					<0.001			<0.001	<0.001			<0.001	0.00016			<0.003	<0.001	<0.001			<0.001		<0.001	<0.001	<0.001	<0.001
	02/08/18	8260B	0.0012	<0.001	<0.001	*<0.001**	<0.002	<0.004	<0.004	<0.01		<0.01					<0.001			<0.001	<0.001			<0.001	<0.001			<0.003	<0.001	<0.001			<0.001		<0.001	<0.001	<0.001	<0.001
	11/28/17	8260B	<0.001	<0.001	<0.001	*<0.001**	<0.002	<0.004	<0.004	0.0021		<0.01					<0.001			<0.001	<0.001			<0.001	<0.001			<0.003	<0.001	<0.001			<0.001		<0.001	<0.001	<0.001	<0.001
	09/25/17	8260B	<0.001	<0.001	<0.001	*<0.001**	<0.002	<0.004	<0.004	0.0026		<0.01					<0.001			<0.001	<0.001			<0.001	<0.001			<0.003	<0.001	<0.001			<0.001		<0.001	<0.001	<0.001	<0.001
	06/05/17	8260B	<0.001	<0.001	<0.001	*<0.001**	<0.002	<0.004	<0.004	0.0038		<0.01					<0.001			<0.001	<0.001			<0.001	<0.001			<0.003	<0.001	<0.001			<0.001		<0.001	<0.001	<0.001	<0.001
	03/08/17	8260B	<0.001	<0.001	<0.001	*<0.001**	<0.002	<0.004	<0.004	0.0017		<0.01					<0.001			<0.001	<0.001			<0.001	<0.001			<0.003	<0.001	<0.001			<0.001		<0.001	<0.001	<0.001	<0.001
	11/01/16	8260B	<0.001	<0.001	<0.001	*<0.001**	<0.002	<0.004	<0.004	<0.01		<0.01					<0.001			0.00035	<0.001			<0.001	<0.001			<0.003	<0.001	<0.001			<0.001		<0.001	<0.001	<0.001	<0.001
	09/09/16	8260B	<0.001	<0.001	<0.001	*<0.001**	<0.002	<0.004	<0.004	<0.01		<0.01					<0.001			<0.001	<0.001			<0.001	<0.001			<0.003	<0.001	<0.001			<0.001		<0.001	<0.001	<0.001	<0.001
	06/09/16	8260B	<0.001	<0.001	<0.001	*<0.001**	<0.002	<0.004	<0.004	<0.01		<0.01					<0.001			<0.001	<0.001			<0.001	<0.001			<0.003	<0.001	<0.001			<0.001		<0.001	<0.001	<0.001	<0.001
	02/24/16	8260B	<0.001	<0.001	<0.001	*<0.001**	<0.002	<0.004	<0.004	<0.01		<0.01					<0.001			<0.001	<0.001			<0.001	<0.001			<0.003	<0.001	<0.001			<0.001		<0.001	<0.001	<0.001	<0.001
	11/09/15	8260B	<0.001	<0.001	<0.001		<0.002	<0.004	<0.004	<0.01		<0.01					<0.001			<0.001	<0.001			<0.001	<0.001			<0.003	<0.001	<0.001			<0.001		<0.001	<0.001	<0.001	<0.001
	08/17/15	8260B	<0.001	<0.001	<0.001		<0.002	<0.004	<0.004	<0.01		<0.01					<0.001			<0.001	<0.001			<0.001	<0.001			<0.003	<0.001	<0.001			<0.001		<0.001	<0.001	<0.001	<0.001
	06/10/15	8260B	<0.002	<0.002	<0.002		<0.004	<0.008	<0.008	<0.02		<0.02					<0.002			<0.002	<0.002			<0.002	<0.002			<0.006	<0.002	<0.002			<0.002		<0.002	<0.002	<0.002	*<0.002**
	03/12/15	8260B	<0.002	<0.002	<0.002		<0.004	<0.008	<0.008	<0.02		<0.02					<0.002			<0.002	<0.002			<0.002	<0.002			<0.006	<0.002	<0.002			<0.002		<0.002	<0.002	<0.002	*<0.002**
	11/21/14	8260B	<0.002	<0.002	<0.002		<0.004	<0.008	<0.008	<0.02		<0.02					<0.002			<0.002	<0.002			<0.002	<0.002			<0.006	<0.002	<0.002			<0.002		<0.002	<0.002	0.0029	*<0.002**
	11/21/14	8260B	<0.002	<0.002	<0.002		<0.004	<0.008	<0.008	<0.02		<0.02					<0.002			<0.002	<0.002			<0.002	<0.002			<0.006	<0.002	<0.002			<0.002		<0.002	<0.002	<0.002	*<0.002**
MKTF-45			SPH Detected - No samples were collected.																																			
MKTF-46	12/03/19	8260B	<0.001	<0.001	<0.001	*<0.001**	<0.002	<0.004	<0.004	<0.01	<0.003	<0.01	<0.001	<0.002	<0.001	<0.003	0.00069	<0.001	<0.001	0.0011	<0.001	<0.001	<0.01	<0.001	<0.001	<0.01	<0.003	<0.003	<0.001	<0.001	<0.001	<0.001	<0.001	<0.001	<0.001	<0.001	<0.001	<0.001
MKTF-47	12/03/19	8260B	<0.001	<0.001	<0.001	*<0.001**	<0.002	<0.004	<0.004	0.0028	<0.003	<0.01	<0.001	<0.002	0.00058	<0.003	<0.001	<0.001	<0.001	<0.001	<0.001	<0.001	<0.01	<0.001	<0.001	<0.01	<0.003	<0.003	<0.001	<0.001	<0.001	<0.001	<0.001	<0.001	<0.001	<0.001	<0.001	<0.001
MKTF-48	12/03/19	8260B	0.0007	0.00023	<0.001	*<0.001**	0.03	0.051	0.04	0.0034	<0.003	<0.01	<0.001	<0.002	<0.001	<0.003	<0.001	<0.001	<0.001	<0.001	<0.001	<0.001	<0.01	0.0021	0.00029	<0.01	<0.003	0.00093	0.0025	0.0019	<0.001	0.00027	<0.001	<0.001	<0.001	<0.001	<0.001	<0.001
MKTF-49	12/03/19	8260B	**0.73**	**0.22**	*<0.02**	*<0.02**	**0.048**	0.0088	0.0092	<0.2	*<0.06**	<0.2	<0.02	<0.04	<0.02	*<0.06**	<0.02	<0.02	<0.02	<0.02	*<0.02**	*<0.02**	*<0.2**	0.12	0.017	<0.2	*<0.06**	0.015	0.14	0.02	<0.02	<0.02	*<0.02**	<0.02	<0.02	*<0.02**	*<0.02**	*<0.02**
MKTF-50	12/03/19	8260B	**0.11**	**0.16**	<0.001	*<0.001**	**0.13**	**0.05**	**0.051**	<0.01	<0.003	<0.01	<0.001	<0.002	<0.001	<0.003	<0.001	<0.001	<0.001	<0.001	<0.001	<0.001	<0.01	0.074	0.0039	<0.01	<0.003	0.015	0.15	0.013	0.0013	0.00049	<0.001	<0.001	<0.001	<0.001	<0.001	<0.001

DEFINITIONS
NE = Not established
NA = Not analyzed
Bold and highlighted values represent values above the applicable standards

STANDARDS
WQCC 20 NMAC 6.2.3103 - Standards for Ground Water of 10,000 mg/l TDS Concentration or Less.
a) Human Health Standards; b) Other Standards for Domestic Water
40 CFR 141.62 Detection Limits for Inorganic Contaminants
EPA Regional Screening Level (RSL) Summary Table
NMED Risk Assessment Guidance for Investigations and Remediations Table A-1

NOTES
Wells marked in red were not sampled because of SPH, well was dry, or well was inaccessible.

Items notes with a * and italics have a detection limit greater than or equal to the applicable standard.

TABLE 9.1
5-YEAR HISTORICAL DTB/DTW MEASUREMENTS - NON MKTF WELLS

Date of Installation	Well ID Number	Inspection or Sample Date	Casing Diameter (Inch)	Ground Level Elevation (ft)	Well Casing Rim Elevation (ft)	Stick-up length (ft)	Well Casing Bottom Elevation (ft)	Total Well Depth (ft)	Depth to SPH (ft)	SPH Column Thickness (ft)	Depth to Water (ft)	Ground water Elevation (ft)	Corrected Water Table [1] Elevation (ft)	Screened Interval Depth Top to Bottom (ft)	Stratigraphic unit in which screen exists
11/10/03	BW-1A	08/10/15	2.00	6,883.17	6,885.12	1.95	6,847.50	46.06	ND	NA	DRY	DRY	NA	30 - 35	Upper Sand
		09/08/16	2.00	6,883.17	6,885.12	1.95	6,847.50	46.06	ND	NA	DRY	DRY	NA	30 - 35	Upper Sand
		09/13/17	2.00	6,883.17	6,885.12	1.95	6,847.50	46.06	ND	NA	DRY	DRY	NA	30 - 35	Upper Sand
		08/15/18	2.00	6,883.17	6,885.12	1.95	6,847.50	42.61	ND	NA	DRY	DRY	NA	30 - 35	Upper Sand
		08/14/19	2.00	6,883.17	6,885.12	1.95	6,847.50	42.61	ND	NA	DRY	DRY	NA	30 - 35	Upper Sand
10/28/03	BW-1B	08/10/15	2.00	6,883.17	6,885.78	2.61	6,818.33	76.29	ND	NA	DRY	DRY	NA	54.6 - 64.6	Chinle/Alluvial Interface
		09/08/16	2.00	6,883.17	6,885.78	2.61	6,818.33	76.29	ND	NA	DRY	DRY	NA	54.6 - 64.6	Chinle/Alluvial Interface
		09/13/17	2.00	6,883.17	6,885.78	2.61	6,818.33	76.29	ND	NA	DRY	DRY	NA	54.6 - 64.6	Chinle/Alluvial Interface
		08/15/18	2.00	6,883.17	6,885.78	2.61	6,818.33	73.55	ND	NA	DRY	DRY	NA	54.6 - 64.6	Chinle/Alluvial Interface
		08/14/19	2.00	6,883.17	6,885.78	2.61	6,818.33	73.55	ND	NA	72.22	6,813.56	NA	54.6 - 64.6	Chinle/Alluvial Interface
11/10/03	BW-1C	08/10/15	2.00	6,883.17	6,885.68	2.51	6,749.29	145.29	ND	NA	12.33	6,873.35	NA	125 -135	Sonsela Sandstone
		09/08/16	2.00	6,883.17	6,885.68	2.51	6,749.29	145.29	ND	NA	12.55	6,873.13	NA	125 -135	Sonsela Sandstone
		09/13/17	2.00	6,883.17	6,885.68	2.51	6,749.29	145.29	ND	NA	12.60	6,873.08	NA	125 -135	Sonsela Sandstone
		08/15/18	2.00	6,883.17	6,885.68	2.51	6,749.29	145.29	ND	NA	12.90	6,872.78	NA	125 -135	Sonsela Sandstone
		08/14/19	2.00	6,883.17	6,885.68	2.51	6,749.29	145.29	ND	NA	12.39	6,873.29	NA	125 -135	Sonsela Sandstone
11/10/03	BW-2A	08/10/15	2.00	6,871.88	6,874.69	2.81	6,807.12	67.57	ND	NA	32.00	6,842.69	NA	55 - 65	Upper Sand
		09/08/16	2.00	6,871.88	6,874.69	2.81	6,807.12	67.57	ND	NA	32.29	6,842.40	NA	55 - 65	Upper Sand
		09/13/17	2.00	6,871.88	6,874.69	2.81	6,807.12	67.57	ND	NA	32.44	6,842.25	NA	55 - 65	Upper Sand
		08/15/18	2.00	6,871.88	6,874.69	2.81	6,807.12	67.57	ND	NA	32.34	6,842.35	NA	55 - 65	Upper Sand
		08/14/19	2.00	6,871.88	6,874.69	2.81	6,807.12	67.57	ND	NA	32.26	6,842.43	NA	55 - 65	Upper Sand
10/28/03	BW-2B	08/10/15	2.00	6,871.66	6,874.50	2.84	6,782.24	92.26	ND	NA	28.00	6,846.50	NA	80 - 90	Chinle/Alluvial Interface
		09/08/16	2.00	6,871.66	6,874.50	2.84	6,782.24	92.26	ND	NA	27.84	6,846.66	NA	80 - 90	Chinle/Alluvial Interface
		09/13/17	2.00	6,871.66	6,874.50	2.84	6,782.24	92.26	ND	NA	28.28	6,846.22	NA	80 - 90	Chinle/Alluvial Interface
		08/15/18	2.00	6,871.66	6,874.50	2.84	6,782.24	92.26	ND	NA	28.25	6,846.25	NA	80 - 90	Chinle/Alluvial Interface
		08/14/19	2.00	6,871.66	6,874.50	2.84	6,782.24	92.26	ND	NA	28.45	6,846.05	NA	80 - 90	Chinle/Alluvial Interface
10/28/03	BW-2C	08/10/15	2.00	6,872.90	6,875.30	2.40	6,722.46	152.84	ND	NA	20.56	6,854.74	NA	139.5 - 149.5	Sonsela Sandstone
		09/08/16	2.00	6,872.90	6,875.30	2.40	6,722.46	152.84	ND	NA	20.63	6,854.67	NA	139.5 - 149.5	Sonsela Sandstone
		09/13/17	2.00	6,872.90	6,875.30	2.40	6,722.46	152.84	ND	NA	20.90	6,854.40	NA	139.5 - 149.5	Sonsela Sandstone
		08/15/18	2.00	6,872.90	6,875.30	2.40	6,722.46	152.84	ND	NA	20.85	6,854.45	NA	139.5 - 149.5	Sonsela Sandstone
		08/14/19	2.00	6,872.90	6,875.30	2.40	6,722.46	152.84	ND	NA	21.20	6,854.10	NA	139.5 - 149.5	Sonsela Sandstone

TABLE 9.1
5-YEAR HISTORICAL DTB/DTW MEASUREMENTS - NON MKTF WELLS

Date of Installation	Well ID Number	Inspection or Sample Date	Casing Diameter (Inch)	Ground Level Elevation (ft)	Well Casing Rim Elevation (ft)	Stick-up length (ft)	Well Casing Bottom Elevation (ft)	Total Well Depth (ft)	Depth to SPH (ft)	SPH Column Thickness (ft)	Depth to Water (ft)	Ground water Elevation (ft)	Corrected Water Table [1] Elevation (ft)	Screened Interval Depth Top to Bottom (ft)	Stratigraphic unit in which screen exists
06/15/04	BW-3A	08/10/15	2.00	6,875.94	6,878.39	2.45	6,826.04	52.35	ND	NA	DRY	DRY	NA	39.5 - 49.5	Upper Sand
		09/08/16	2.00	6,875.94	6,878.39	2.45	6,826.04	52.35	ND	NA	DRY	DRY	NA	39.5 - 49.5	Upper Sand
		09/13/17	2.00	6,875.94	6,878.39	2.45	6,826.04	52.35	ND	NA	DRY	DRY	NA	39.5 - 49.5	Upper Sand
		08/15/18	2.00	6,875.94	6,878.39	2.45	6,826.04	52.38	ND	NA	DRY	DRY	NA	39.5 - 49.5	Upper Sand
		08/14/19	2.00	6,875.94	6,878.39	2.45	6,826.04	52.38	ND	NA	DRY	DRY	NA	39.5 - 49.5	Upper Sand
10/15/03	BW-3B	08/10/15	2.00	6,876.16	6,878.59	2.43	6,809.19	69.40	ND	NA	33.00	6,845.59	NA	63 - 73	Chinle/Alluvial Interface
		09/08/16	2.00	6,876.16	6,878.59	2.43	6,809.19	69.40	ND	NA	33.42	6,845.17	NA	63 - 73	Chinle/Alluvial Interface
		09/13/17	2.00	6,876.16	6,878.59	2.43	6,809.19	69.40	ND	NA	33.38	6,845.21	NA	63 - 73	Chinle/Alluvial Interface
		08/15/18	2.00	6,876.16	6,878.59	2.43	6,809.19	69.40	ND	NA	33.35	6,845.24	NA	63 - 73	Chinle/Alluvial Interface
		08/14/19	2.00	6,876.16	6,878.59	2.43	6,809.19	69.40	ND	NA	33.31	6,845.28	NA	63 - 73	Chinle/Alluvial Interface
07/20/04	BW-3C	08/10/15	2.00	6,875.72	6,877.95	2.23	6,723.40	154.55	ND	NA	7.75	6,870.20	NA	144.5 - 154.5	Sonsela Sandstone
		09/08/16	2.00	6,875.72	6,877.95	2.23	6,723.40	154.55	ND	NA	8.30	6,869.65	NA	144.5 - 154.5	Sonsela Sandstone
		09/13/17	2.00	6,875.72	6,877.95	2.23	6,723.40	154.55	ND	NA	7.80	6,870.15	NA	144.5 - 154.5	Sonsela Sandstone
		08/15/18	2.00	6,875.72	6,877.95	2.23	6,723.40	154.55	ND	NA	8.18	6,869.77	NA	144.5 - 154.5	Sonsela Sandstone
		08/14/19	2.00	6,875.72	6,877.95	2.23	6,723.40	154.55	ND	NA	7.86	6,870.09	NA	144.5 - 154.5	Sonsela Sandstone
06/29/17	BW-4A	09/21/17	2.00	6,870.67	6,873.18	2.51	6,723.40	38.80	ND	NA	DRY	DRY	NA	21 - 36	Upper Sand
		12/08/17	2.00	6,870.67	6,873.18	2.51	6,723.40	38.30	ND	NA	DRY	DRY	NA	21 - 36	Upper Sand
		02/26/18	2.00	6,870.67	6,873.18	2.51	6,723.40	38.80	ND	NA	DRY	DRY	NA	21 - 36	Upper Sand
		04/25/18	2.00	6,870.67	6,873.18	2.51	6,723.40	38.80	ND	NA	DRY	DRY	NA	21 - 36	Upper Sand
		08/15/18	2.00	6,870.67	6,873.18	2.51	6,723.40	38.80	ND	NA	DRY	DRY	NA	21 - 36	Upper Sand
		11/07/18	2.00	6,870.67	6,873.18	2.51	6,723.40	38.30	ND	NA	DRY	DRY	NA	21 - 36	Upper Sand
		03/27/19	2.00	6,869.28	6,872.20	2.92	6,907.60	38.32	ND	NA	DRY	DRY	NA	21 - 36	Upper Sand
		05/21/19	2.00	6,869.28	6,872.20	2.92	6,907.60	38.32	ND	NA	DRY	DRY	NA	21 - 36	Upper Sand
		08/23/19	2.00	6,869.28	6,872.20	2.92	6,907.60	38.32	ND	NA	DRY	DRY	NA	21 - 36	Upper Sand
		10/16/19	2.00	6,869.28	6,872.20	2.92	6,907.60	38.32	ND	NA	DRY	DRY	NA	21 - 36	Upper Sand

TABLE 9.1
5-YEAR HISTORICAL DTB/DTW MEASUREMENTS - NON MKTF WELLS

Date of Installation	Well ID Number	Inspection or Sample Date	Casing Diameter (Inch)	Ground Level Elevation (ft)	Well Casing Rim Elevation (ft)	Stick-up length (ft)	Well Casing Bottom Elevation (ft)	Total Well Depth (ft)	Depth to SPH (ft)	SPH Column Thickness (ft)	Depth to Water (ft)	Ground water Elevation (ft)	Corrected Water Table [1] Elevation (ft)	Screened Interval Depth Top to Bottom (ft)	Stratigraphic unit in which screen exists
06/29/17	BW-4B	09/21/17	2.00	6,870.62	6,873.23	2.61	6,723.40	63.50	ND	NA	31.58	6,841.65	NA	41 - 61	Chinle/Alluvial Interface
		12/08/17	2.00	6,870.62	6,873.23	2.61	6,723.40	63.50	ND	NA	37.95	6,835.28	NA	41 - 61	Chinle/Alluvial Interface
		02/26/18	2.00	6,870.62	6,873.23	2.61	6,723.40	63.50	ND	NA	38.43	6,834.80	NA	41 - 61	Chinle/Alluvial Interface
		04/25/18	2.00	6,870.62	6,873.23	2.61	6,723.40	63.50	ND	NA	43.60	6,829.63	NA	41 - 61	Chinle/Alluvial Interface
		08/15/18	2.00	6,870.62	6,873.23	2.61	6,723.40	63.50	ND	NA	39.05	6,834.18	NA	41 - 61	Chinle/Alluvial Interface
		11/13/18	2.00	6,870.62	6,873.23	2.61	6,723.40	63.50	ND	NA	44.87	6,828.36	NA	41 - 61	Chinle/Alluvial Interface
		03/27/19	2.00	6,869.45	6,872.24	2.79	6,932.95	63.50	ND	NA	39.30	6,832.94	NA	41 - 61	Chinle/Alluvial Interface
		05/21/19	2.00	6,869.45	6,872.24	2.79	6,932.95	63.50	ND	NA	46.01	6,826.23	NA	41 - 61	Chinle/Alluvial Interface
		08/23/19	2.00	6,869.45	6,872.24	2.79	6,932.95	63.50	ND	NA	46.00	6,826.24	NA	41 - 61	Chinle/Alluvial Interface
		10/16/19	2.00	6,869.45	6,872.24	2.79	6,932.95	63.50	ND	NA	47.50	6,824.74	NA	41 - 61	Chinle/Alluvial Interface
06/29/17	BW-5A	09/21/17	2.00	6,874.39	6,877.00	2.61	6,723.40	23.00	ND	NA	DRY	DRY	NA	10 - 20	Upper Sand
		12/08/17	2.00	6,874.39	6,877.00	2.61	6,723.40	23.02	ND	NA	DRY	DRY	NA	10 - 20	Upper Sand
		02/26/18	2.00	6,874.39	6,877.00	2.61	6,723.40	23.02	ND	NA	DRY	DRY	NA	10 - 20	Upper Sand
		04/25/18	2.00	6,874.39	6,877.00	2.61	6,723.40	23.02	ND	NA	DRY	DRY	NA	10 - 20	Upper Sand
		08/15/18	2.00	6,874.39	6,877.00	2.61	6,723.40	23.02	ND	NA	DRY	DRY	NA	10 - 20	Upper Sand
		11/13/18	2.00	6,874.39	6,877.00	2.61	6,723.40	23.02	ND	NA	DRY	DRY	NA	10 - 20	Upper Sand
		03/27/19	2.00	6,873.18	6,876.06	2.88	6,896.18	23.00	ND	NA	23.25	6,852.81	NA	10 - 20	Upper Sand
		05/21/19	2.00	6,873.18	6,876.06	2.88	6,896.18	23.00	ND	NA	23.30	6,852.76	NA	10 - 20	Upper Sand
		08/15/19	2.00	6,873.18	6,876.06	2.88	6,896.20	23.02	ND	NA	21.26	6,854.80	NA	10 - 20	Upper Sand
		10/16/19	2.00	6,873.18	6,876.06	2.88	6,896.48	23.30	ND	NA	23.25	6,852.81	NA	10 - 20	Upper Sand
06/29/17	BW-5B	09/21/17	2.00	6,874.32	6,876.82	2.50	6,723.40	61.45	ND	NA	8.65	6,868.17	NA	48 - 58	Chinle/Alluvial Interface
		12/08/17	2.00	6,874.32	6,876.82	2.50	6,723.40	61.45	ND	NA	9.00	6,867.82	NA	48 - 58	Chinle/Alluvial Interface
		02/26/18	2.00	6,874.32	6,876.82	2.50	6,723.40	61.45	ND	NA	10.28	6,866.54	NA	48 - 58	Chinle/Alluvial Interface
		04/25/18	2.00	6,874.32	6,876.82	2.50	6,723.40	61.45	ND	NA	9.75	6,867.07	NA	48 - 58	Chinle/Alluvial Interface
		08/15/18	2.00	6,874.32	6,876.82	2.50	6,723.40	61.45	ND	NA	10.04	6,866.78	NA	48 - 58	Chinle/Alluvial Interface
		11/13/18	2.00	6,874.32	6,876.82	2.50	6,723.40	61.45	ND	NA	10.57	6,866.25	NA	48 - 58	Chinle/Alluvial Interface
		03/27/19	2.00	6,873.30	6,875.84	2.54	6,934.75	61.45	ND	NA	9.38	6,866.46	NA	48 - 58	Chinle/Alluvial Interface
		05/21/19	2.00	6,873.30	6,875.84	2.54	6,934.75	61.45	ND	NA	9.20	6,866.64	NA	48 - 58	Chinle/Alluvial Interface
		08/15/19	2.00	6,873.30	6,875.84	2.54	6,934.75	61.45	ND	NA	9.67	6,866.17	NA	48 - 58	Chinle/Alluvial Interface
		10/16/19	2.00	6,873.30	6,875.84	2.54	6,934.75	61.45	ND	NA	10.27	6,865.57	NA	48 - 58	Chinle/Alluvial Interface

TABLE 9.1
5-YEAR HISTORICAL DTB/DTW MEASUREMENTS - NON MKTF WELLS

Date of Installation	Well ID Number	Inspection or Sample Date	Casing Diameter (Inch)	Ground Level Elevation (ft)	Well Casing Rim Elevation (ft)	Stick-up length (ft)	Well Casing Bottom Elevation (ft)	Total Well Depth (ft)	Depth to SPH (ft)	SPH Column Thickness (ft)	Depth to Water (ft)	Ground water Elevation (ft)	Corrected Water Table [1] Elevation (ft)	Screened Interval Depth Top to Bottom (ft)	Stratigraphic unit in which screen exists
06/29/17	BW-5C	09/21/17	2.00	6,874.22	6,876.85	2.63	6,950.57	76.35	ND	NA	2.99	6,873.86	NA	64.3-74.30	Sonsela Sandstone
		12/08/17	2.00	6,874.22	6,876.85	2.63	6,950.57	76.35	ND	NA	2.80	6,874.05	NA	64.3-74.30	Sonsela Sandstone
		02/26/18	2.00	6,874.22	6,876.85	2.63	6,950.57	76.35	ND	NA	2.63	6,874.22	NA	64.3-74.30	Sonsela Sandstone
		04/25/18	2.00	6,874.22	6,876.85	2.63	6,950.57	76.35	ND	NA	2.55	6,874.30	NA	64.3-74.30	Sonsela Sandstone
		08/15/18	2.00	6,874.22	6,876.85	2.63	6,950.57	76.35	ND	NA	3.32	6,873.53	NA	64.3-74.30	Sonsela Sandstone
		11/13/18	2.00	6,874.22	6,876.85	2.63	6,950.57	76.35	ND	NA	3.49	6,873.36	NA	64.3-74.30	Sonsela Sandstone
		03/27/19	2.00	6,872.92	6,875.93	3.01	6,949.27	76.35	ND	NA	1.99	6,873.94	NA	64.3-74.30	Sonsela Sandstone
		05/21/19	2.00	6,872.92	6,875.93	3.01	6,949.27	76.35	ND	NA	1.60	6,874.33	NA	64.3-74.30	Sonsela Sandstone
		08/15/19	2.00	6,872.92	6,875.93	3.01	6,949.27	76.35	ND	NA	2.69	6,873.24	NA	64.3-74.30	Sonsela Sandstone
		10/16/19	2.00	6,872.92	6,875.93	3.01	6,949.27	76.35	ND	NA	3.50	6,872.43	NA	64.3-74.30	Sonsela Sandstone
07/08/04	GWM-1	03/10/15	2.00	6,910.22	6,912.61	2.39	6,886.41	26.20	ND	NA	20.99	6,891.62	NA	17.5 - 23.5	Chinle/Alluvial Interface
		06/02/15	2.00	6,910.22	6,912.61	2.39	6,886.41	26.20	ND	NA	20.92	6,891.69	NA	17.5 - 23.5	Chinle/Alluvial Interface
		08/11/15	2.00	6,910.22	6,912.61	2.39	6,886.41	26.20	21.40	NA	NA	NA	NA	17.5 - 23.5	Chinle/Alluvial Interface
		08/24/15	2.00	6,910.22	6,912.61	2.39	6,886.41	26.20	21.00	0.45	21.45	6,891.16	6891.52	17.5 - 23.5	Chinle/Alluvial Interface
		10/29/15	2.00	6,910.22	6,912.61	2.39	6,886.41	26.20	21.13	0.34	21.47	6,891.14	6891.41	17.5 - 23.5	Chinle/Alluvial Interface
		03/01/16	2.00	6,910.22	6,912.61	2.39	6,886.41	26.20	22.84	0.04	22.88	6,889.73	6889.76	17.5 - 23.5	Chinle/Alluvial Interface
		06/07/16	2.00	6,910.22	6,912.61	2.39	6,886.41	26.20	21.36	0.03	21.39	6,891.22	6891.24	17.5 - 23.5	Chinle/Alluvial Interface
		09/13/16	2.00	6,910.22	6,912.61	2.39	6,886.41	26.20	21.29	NA	NA	NA	NA	17.5 - 23.5	Chinle/Alluvial Interface
		11/14/16	2.00	6,910.22	6,912.61	2.39	6,886.41	26.20	21.50	0.02	21.52	6,891.09	6,891.11	17.5 - 23.5	Chinle/Alluvial Interface
		03/16/17	2.00	6,910.22	6,912.61	2.39	6,886.41	26.20	21.74	0.30	22.04	6,890.57	6890.81	17.5 - 23.5	Chinle/Alluvial Interface
		06/02/17	2.00	6,910.22	6,912.61	2.39	6,886.41	26.20	21.54	0.44	21.98	6,890.63	6890.98	17.5 - 23.5	Chinle/Alluvial Interface
		09/08/17	2.00	6,910.22	6,912.61	2.39	6,886.41	26.20	21.49	0.22	21.71	6,890.90	6891.08	17.5 - 23.5	Chinle/Alluvial Interface
		12/04/17	2.00	6,910.22	6,912.61	2.39	6,886.41	26.20	19.70	1.00	20.70	6,891.91	6892.71	17.5 - 23.5	Chinle/Alluvial Interface
		02/12/18	2.00	6,910.22	6,912.61	2.39	6,886.41	26.20	21.83	0.37	22.20	6,890.41	6890.71	17.5 - 23.5	Chinle/Alluvial Interface
		04/26/18	2.00	6,910.22	6,912.61	2.39	6,886.41	26.38	21.85	0.40	22.25	6,890.36	6890.68	17.5 - 23.5	Chinle/Alluvial Interface
		08/15/18	2.00	6,910.22	6,912.61	2.39	6,886.41	26.42	21.50	0.04	21.54	6,891.07	6891.10	17.5 - 23.5	Chinle/Alluvial Interface
		11/19/18	2.00	6,910.22	6,912.61	2.39	6,886.41	26.20	21.42	0.13	21.55	6,891.06	6891.16	17.5 - 23.5	Chinle/Alluvial Interface
		03/28/19	2.00	6,910.22	6,912.61	2.39	6,886.41	26.20	21.59	0.48	22.07	6,890.54	6890.92	17.5 - 23.5	Chinle/Alluvial Interface
		05/08/19	2.00	6,910.22	6,912.61	2.39	6,886.41	26.20	21.32	0.29	21.61	6,891.00	6891.23	17.5 - 23.5	Chinle/Alluvial Interface
		08/06/19	2.00	6,910.22	6,912.61	2.39	6,886.41	26.42	20.77	0.13	20.90	6,891.71	6891.81	17.5 - 23.5	Chinle/Alluvial Interface
		10/21/19	2.00	6,910.22	6,912.61	2.39	6,886.41	26.20	20.64	0.19	20.83	6,891.78	6891.93	17.5 - 23.5	Chinle/Alluvial Interface

TABLE 9.1
5-YEAR HISTORICAL DTB/DTW MEASUREMENTS - NON MKTF WELLS

Date of Installation	Well ID Number	Inspection or Sample Date	Casing Diameter (Inch)	Ground Level Elevation (ft)	Well Casing Rim Elevation (ft)	Stick-up length (ft)	Well Casing Bottom Elevation (ft)	Total Well Depth (ft)	Depth to SPH (ft)	SPH Column Thickness (ft)	Depth to Water (ft)	Ground water Elevation (ft)	Corrected Water Table [1] Elevation (ft)	Screened Interval Depth Top to Bottom (ft)	Stratigraphic unit in which screen exists
09/25/05	GWM-2	03/10/15	2.00	6,910.32	6,913.09	2.77	6,894.28	18.81	ND	NA	DRY	NA	NA	3.2 - 16.2	Chinle/Alluvial Interface
		06/02/15	2.00	6,910.32	6,913.09	2.77	6,894.28	18.81	ND	NA	DRY	NA	NA	3.2 - 16.2	Chinle/Alluvial Interface
		08/11/15	2.00	6,910.32	6,913.09	2.77	6,894.28	18.81	ND	NA	DRY	NA	NA	3.2 - 16.2	Chinle/Alluvial Interface
		10/29/15	2.00	6,910.32	6,913.09	2.77	6,894.28	18.81	ND	NA	DRY	NA	NA	3.2 - 16.2	Chinle/Alluvial Interface
		10/29/15	2.00	6,910.32	6,913.09	2.77	6,894.28	18.81	ND	NA	DRY	NA	NA	3.2 - 16.2	Chinle/Alluvial Interface
		03/01/16	2.00	6,910.32	6,913.09	2.77	6,894.28	18.81	ND	NA	DRY	NA	NA	3.2 - 16.2	Chinle/Alluvial Interface
		06/07/16	2.00	6,910.32	6,913.09	2.77	6,894.28	18.81	ND	NA	DRY	NA	NA	3.2 - 16.2	Chinle/Alluvial Interface
		09/13/16	2.00	6,910.32	6,913.09	2.77	6,894.28	18.81	ND	NA	DRY	NA	NA	3.2 - 16.2	Chinle/Alluvial Interface
		11/14/16	2.00	6,910.32	6,913.09	2.77	6,894.28	18.81	ND	NA	DRY	NA	NA	3.2 - 16.2	Chinle/Alluvial Interface
		03/16/17	2.00	6,910.32	6,913.09	2.77	6,894.28	18.81	ND	NA	DRY	NA	NA	3.2 - 16.2	Chinle/Alluvial Interface
		06/02/17	2.00	6,910.32	6,913.09	2.77	6,894.28	18.81	ND	NA	DRY	NA	NA	3.2 - 16.2	Chinle/Alluvial Interface
		09/05/17	2.00	6,910.32	6,913.09	2.77	6,894.28	18.81	ND	NA	DRY	NA	NA	3.2 - 16.2	Chinle/Alluvial Interface
		12/04/17	2.00	6,910.32	6,913.09	2.77	6,894.28	18.81	ND	NA	DRY	NA	NA	3.2 - 16.2	Chinle/Alluvial Interface
		02/12/18	2.00	6,910.32	6,913.09	2.77	6,894.28	19.05	ND	NA	DRY	NA	NA	3.2 - 16.2	Chinle/Alluvial Interface
		04/26/18	2.00	6,910.32	6,913.09	2.77	6,894.28	19.01	ND	NA	DRY	NA	NA	3.2 - 16.2	Chinle/Alluvial Interface
		08/15/18	2.00	6,910.32	6,913.09	2.77	6,894.28	19.04	ND	NA	DRY	NA	NA	3.2 - 16.2	Chinle/Alluvial Interface
		11/19/18	2.00	6,910.32	6,913.09	2.77	6,894.28	18.81	ND	NA	DRY	NA	NA	3.2 - 16.2	Chinle/Alluvial Interface
		03/28/19	2.00	6,910.32	6,913.09	2.77	6,894.28	19.09	ND	NA	DRY	NA	NA	3.2 - 16.2	Chinle/Alluvial Interface
		05/08/19	2.00	6,910.32	6,913.09	2.77	6,894.28	19.09	ND	NA	DRY	NA	NA	3.2 - 16.2	Chinle/Alluvial Interface
		08/06/19	2.00	6,910.32	6,913.09	2.77	6,894.28	19.04	ND	NA	DRY	NA	NA	3.2 - 16.2	Chinle/Alluvial Interface
		10/19/19	2.00	6,910.32	6,913.09	2.77	6,894.28	18.81	ND	NA	DRY	NA	NA	3.2 - 16.2	Chinle/Alluvial Interface

TABLE 9.1
5-YEAR HISTORICAL DTB/DTW MEASUREMENTS - NON MKTF WELLS

Date of Installation	Well ID Number	Inspection or Sample Date	Casing Diameter (Inch)	Ground Level Elevation (ft)	Well Casing Rim Elevation (ft)	Stick-up length (ft)	Well Casing Bottom Elevation (ft)	Total Well Depth (ft)	Depth to SPH (ft)	SPH Column Thickness (ft)	Depth to Water (ft)	Ground water Elevation (ft)	Corrected Water Table [1] Elevation (ft)	Screened Interval Depth Top to Bottom (ft)	Stratigraphic unit in which screen exists
09/25/05	GWM-3	03/10/15	2.00	6,907.35	6,910.25	2.90	6,892.45	17.80	ND	NA	DRY	NA	NA	3 - 15	Chinle/Alluvial Interface
		06/02/15	2.00	6,907.35	6,910.25	2.90	6,892.45	17.80	ND	NA	DRY	NA	NA	3 - 15	Chinle/Alluvial Interface
		08/11/15	2.00	6,907.35	6,910.25	2.90	6,892.45	17.80	ND	NA	DRY	NA	NA	3 - 15	Chinle/Alluvial Interface
		10/29/15	2.00	6,907.35	6,910.25	2.90	6,892.45	17.80	ND	NA	DRY	NA	NA	3 - 15	Chinle/Alluvial Interface
		03/01/16	2.00	6,907.35	6,910.25	2.90	6,892.45	17.80	ND	NA	DRY	NA	NA	3 - 15	Chinle/Alluvial Interface
		06/07/16	2.00	6,907.35	6,910.25	2.90	6,892.45	17.80	ND	NA	DRY	NA	NA	3 - 15	Chinle/Alluvial Interface
		09/13/16	2.00	6,907.35	6,910.25	2.90	6,892.45	17.80	ND	NA	DRY	NA	NA	3 - 15	Chinle/Alluvial Interface
		11/14/16	2.00	6,907.35	6,910.25	2.90	6,892.45	17.80	ND	NA	DRY	NA	NA	3 - 15	Chinle/Alluvial Interface
		03/16/17	2.00	6,907.35	6,910.25	2.90	6,892.45	17.80	ND	NA	DRY	NA	NA	3 - 15	Chinle/Alluvial Interface
		06/02/17	2.00	6,907.35	6,910.25	2.90	6,892.45	17.80	ND	NA	DRY	NA	NA	3 - 15	Chinle/Alluvial Interface
		09/05/17	2.00	6,907.35	6,910.25	2.90	6,892.45	17.80	ND	NA	DRY	NA	NA	3 - 15	Chinle/Alluvial Interface
		12/04/17	2.00	6,907.35	6,910.25	2.90	6,892.45	17.80	ND	NA	DRY	NA	NA	3 - 15	Chinle/Alluvial Interface
		02/12/18	2.00	6,907.35	6,910.25	2.90	6,892.45	18.05	ND	NA	DRY	NA	NA	3 - 15	Chinle/Alluvial Interface
		04/26/18	2.00	6,907.35	6,910.25	2.90	6,892.45	18.02	ND	NA	DRY	NA	NA	3 - 15	Chinle/Alluvial Interface
		08/15/18	2.00	6,907.35	6,910.25	2.90	6,892.45	18.04	ND	NA	DRY	NA	NA	3 - 15	Chinle/Alluvial Interface
		11/19/18	2.00	6,907.35	6,910.25	2.90	6,892.45	17.80	ND	NA	DRY	NA	NA	3 - 15	Chinle/Alluvial Interface
		03/28/19	2.00	6,907.35	6,910.25	2.90	6,892.45	18.06	ND	NA	DRY	DRY	NA	3 - 15	Chinle/Alluvial Interface
		05/08/19	2.00	6,907.35	6,910.25	2.90	6,892.45	18.06	ND	NA	DRY	DRY	NA	3 - 15	Chinle/Alluvial Interface
		08/06/19	2.00	6,907.35	6,910.25	2.90	6,892.45	18.04	ND	NA	DRY	DRY	NA	3 - 15	Chinle/Alluvial Interface
		10/19/19	2.00	6,907.35	6,910.25	2.90	6,892.45	17.80	ND	NA	DRY	DRY	NA	3 - 15	Chinle/Alluvial Interface

TABLE 9.1
5-YEAR HISTORICAL DTB/DTW MEASUREMENTS - NON MKTF WELLS

Date of Installation	Well ID Number	Inspection or Sample Date	Casing Diameter (Inch)	Ground Level Elevation (ft)	Well Casing Rim Elevation (ft)	Stick-up length (ft)	Well Casing Bottom Elevation (ft)	Total Well Depth (ft)	Depth to SPH (ft)	SPH Column Thickness (ft)	Depth to Water (ft)	Ground water Elevation (ft)	Corrected Water Table [1] Elevation (ft)	Screened Interval Depth Top to Bottom (ft)	Stratigraphic unit in which screen exists
06/11/07	KA-3	03/10/15	2.00	6,913.29	6,912.52	-0.77	6,889.32	23.20	ND	NA	8.24	6,904.28	NA	15 - 25	Chinle/Alluvial Interface
		06/02/15	2.00	6,913.29	6,912.52	-0.77	6,889.32	23.20	ND	NA	8.59	6,903.93	NA	15 - 25	Chinle/Alluvial Interface
		08/10/15	2.00	6,913.29	6,912.52	-0.77	6,889.32	23.20	ND	NA	8.78	6,903.74	NA	15 - 25	Chinle/Alluvial Interface
		10/28/15	2.00	6,913.29	6,912.52	-0.77	6,889.32	23.20	ND	NA	8.20	6,904.32	NA	15 - 25	Chinle/Alluvial Interface
		03/03/16	2.00	6,913.29	6,912.52	-0.77	6,889.32	23.20	ND	NA	7.68	6,904.84	NA	15 - 25	Chinle/Alluvial Interface
		06/06/16	2.00	6,913.29	6,912.52	-0.77	6,889.32	23.20	ND	NA	7.42	6,905.10	NA	15 - 25	Chinle/Alluvial Interface
		09/01/16	2.00	6,913.29	6,912.52	-0.77	6,889.32	23.20	ND	NA	8.13	6,904.39	NA	15 - 25	Chinle/Alluvial Interface
		11/14/16	2.00	6,913.29	6,912.52	-0.77	6,889.32	23.20	ND	NA	8.28	6,904.24	NA	15 - 25	Chinle/Alluvial Interface
		02/21/17	2.00	6,913.29	6,912.52	-0.77	6,889.32	23.20	ND	NA	7.37	6,905.15	NA	15 - 25	Chinle/Alluvial Interface
		06/01/17	2.00	6,913.29	6,912.52	-0.77	6,889.32	23.20	ND	NA	8.22	6,904.30	NA	15 - 25	Chinle/Alluvial Interface
		09/05/17	2.00	6,913.29	6,912.52	-0.77	6,889.32	23.20	ND	NA	8.21	6,904.31	NA	15 - 25	Chinle/Alluvial Interface
		12/04/17	2.00	6,913.29	6,912.52	-0.77	6,889.32	24.28	ND	NA	8.00	6,904.52	NA	15 - 25	Chinle/Alluvial Interface
		02/09/18	2.00	6,913.29	6,912.52	-0.77	6,889.32	24.30	ND	NA	8.40	6,904.12	NA	15 - 25	Chinle/Alluvial Interface
		04/26/18	2.00	6,913.29	6,912.52	-0.77	6,889.32	24.24	ND	NA	8.50	6,904.02	NA	15 - 25	Chinle/Alluvial Interface
		08/15/18	2.00	6,913.29	6,912.52	-0.77	6,889.32	NM	NM	NA	NM	NA	NA	15 - 25	Chinle/Alluvial Interface
		11/08/18	2.00	6,913.29	6,912.52	-0.77	6,889.32	NM	NM	NA	NM	NA	NA	15 - 25	Chinle/Alluvial Interface
		03/28/19	2.00	6,913.29	6,912.52	-0.77	6,889.32	NM	NM	NA	NM	NA	NA	15 - 25	Chinle/Alluvial Interface
		05/28/19	2.00	6,913.29	6,912.52	-0.77	6,889.32	23.20	ND	NA	9.95	6,902.57	NA	15 - 25	Chinle/Alluvial Interface
		08/22/19	2.00	6,913.29	6,912.52	-0.77	6,889.32	23.20	ND	NA	9.05	6,903.47	NA	15 - 25	Chinle/Alluvial Interface
		10/21/19	2.00	6,913.29	6,912.52	-0.77	6,889.32	23.20	ND	NA	9.16	6,903.36	NA	15 - 25	Chinle/Alluvial Interface
10/14/81	MW-1	08/10/15	5.00	6,876.63	6,878.12	1.49	6,747.29	130.83	ND	NA	6.90	6,871.22	NA	117.72 - 127.72	Sonsela Sandstone
		09/07/16	5.00	6,876.63	6,878.12	1.49	6,747.29	130.83	ND	NA	7.01	6,871.11	NA	117.72 - 127.72	Sonsela Sandstone
		09/20/17	5.00	6,876.63	6,878.12	1.49	6,747.29	130.83	ND	NA	7.02	6,871.10	NA	117.72 - 127.72	Sonsela Sandstone
		08/15/18	5.00	6,876.63	6,878.12	1.49	6,747.29	130.83	ND	NA	7.75	6,870.37	NA	117.72 - 127.72	Sonsela Sandstone
		12/05/18	5.00	6,876.63	6,878.12	1.49	6,747.29	130.83	ND	NA	7.36	6,870.76	NA	117.72 - 127.72	Sonsela Sandstone
		08/12/19	5.00	6,876.63	6,878.12	1.49	6,747.29	130.83	ND	NA	6.94	6,871.18	NA	117.72 - 127.72	Sonsela Sandstone
10/15/81	MW-2	08/10/15	5.00	6,878.39	6,880.30	1.91	6,742.82	137.48	ND	NA	9.13	6,871.17	NA	112 - 122	Sonsela Sandstone
		09/07/16	5.00	6,878.39	6,880.30	1.91	6,742.82	137.48	ND	NA	14.10	6,866.20	NA	112 - 122	Sonsela Sandstone
		09/20/17	5.00	6,878.39	6,880.30	1.91	6,742.82	137.48	ND	NA	15.64	6,864.66	NA	112 - 122	Sonsela Sandstone
		08/15/18	5.00	6,878.39	6,880.30	1.91	6,742.82	137.48	ND	NA	9.35	6,870.95	NA	112 - 122	Sonsela Sandstone
		12/05/18	5.00	6,878.39	6,880.30	1.91	6,742.82	137.48	ND	NA	16.63	6,863.67	NA	112 - 122	Sonsela Sandstone
		08/13/19	5.00	6,878.39	6,880.30	1.91	6,742.82	137.48	ND	NA	9.00	6,871.30	NA	112 - 122	Sonsela Sandstone

TABLE 9.1
5-YEAR HISTORICAL DTB/DTW MEASUREMENTS - NON MKTF WELLS

Date of Installation	Well ID Number	Inspection or Sample Date	Casing Diameter (Inch)	Ground Level Elevation (ft)	Well Casing Rim Elevation (ft)	Stick-up length (ft)	Well Casing Bottom Elevation (ft)	Total Well Depth (ft)	Depth to SPH (ft)	SPH Column Thickness (ft)	Depth to Water (ft)	Ground water Elevation (ft)	Corrected Water Table [1] Elevation (ft)	Screened Interval Depth Top to Bottom (ft)	Stratigraphic unit in which screen exists
10/16/81	MW-4	08/10/15	5.00	6,879.89	6,881.63	1.74	6,759.91	121.72	ND	NA	7.30	6,874.33	NA	101 - 121	Sonsela Sandstone
		09/07/16	5.00	6,879.89	6,881.63	1.74	6,759.91	121.72	ND	NA	7.38	6,874.25	NA	101 - 121	Sonsela Sandstone
		09/21/17	5.00	6,879.89	6,881.63	1.74	6,759.91	121.72	ND	NA	7.56	6,874.07	NA	101 - 121	Sonsela Sandstone
		08/15/18	5.00	6,879.89	6,881.63	1.74	6,759.91	121.72	ND	NA	7.71	6,873.92	NA	101 - 121	Sonsela Sandstone
		12/05/18	5.00	6,879.89	6,881.63	1.74	6,759.91	121.72	ND	NA	7.83	6,873.80	NA	101 - 121	Sonsela Sandstone
		08/13/19	5.00	6,879.89	6,881.63	1.74	6,759.91	121.72	ND	NA	7.00	6,874.63	NA	101 - 121	Sonsela Sandstone
07/21/86	MW-5	08/10/15	4.00	6,880.20	6,882.83	2.63	6,752.00	130.83	ND	NA	11.20	6,871.63	NA	115 - 125	Sonsela Sandstone
		09/07/16	4.00	6,880.20	6,882.83	2.63	6,752.00	130.83	ND	NA	13.50	6,869.33	NA	115 - 125	Sonsela Sandstone
		09/11/17	4.00	6,880.20	6,882.83	2.63	6,752.00	130.83	ND	NA	11.22	6,871.61	NA	115 - 125	Sonsela Sandstone
		08/15/18	4.00	6,880.20	6,882.83	2.63	6,752.00	130.83	ND	NA	11.51	6,871.32	NA	115 - 125	Sonsela Sandstone
		12/06/18	4.00	6,880.20	6,882.83	2.63	6,752.00	130.83	ND	NA	16.80	6,866.03	NA	115 - 125	Sonsela Sandstone
		08/14/19	4.00	6,880.20	6,882.83	2.63	6,752.00	130.83	ND	NA	11.05	6,871.78	NA	115 - 125	Sonsela Sandstone
03/14/08	NAPIS-1	03/10/15	2.00	6,913.62	6,913.86	0.24	6,900.33	13.53	ND	NA	6.90	6,906.96	NA	3.7 - 13.7	Chinle/Alluvial Interface
		06/02/15	2.00	6,913.62	6,913.86	0.24	6,900.33	13.53	ND	NA	7.00	6,906.86	NA	3.7 - 13.7	Chinle/Alluvial Interface
		08/10/15	2.00	6,913.62	6,913.86	0.24	6,900.33	13.53	ND	NA	7.00	6,906.86	NA	3.7 - 13.7	Chinle/Alluvial Interface
		10/28/15	2.00	6,913.62	6,913.86	0.24	6,900.33	13.53	ND	NA	7.20	6,906.66	NA	3.7 - 13.7	Chinle/Alluvial Interface
		03/01/16	2.00	6,913.62	6,913.86	0.24	6,900.33	13.53	ND	NA	6.65	6,907.21	NA	3.7 - 13.7	Chinle/Alluvial Interface
		06/07/16	2.00	6,913.62	6,913.86	0.24	6,900.33	13.53	ND	NA	6.64	6,907.22	NA	3.7 - 13.7	Chinle/Alluvial Interface
		09/01/16	2.00	6,913.62	6,913.86	0.24	6,900.33	13.53	ND	NA	6.99	6,906.87	NA	3.7 - 13.7	Chinle/Alluvial Interface
		11/14/16	2.00	6,913.62	6,913.86	0.24	6,900.33	13.53	ND	NA	6.82	6,907.04	NA	3.7 - 13.7	Chinle/Alluvial Interface
		02/21/17	2.00	6,913.62	6,913.86	0.24	6,900.33	13.53	ND	NA	6.70	6,907.16	NA	3.7 - 13.7	Chinle/Alluvial Interface
		06/02/17	2.00	6,913.62	6,913.86	0.24	6,900.33	13.53	ND	NA	6.85	6,907.01	NA	3.7 - 13.7	Chinle/Alluvial Interface
		09/05/17	2.00	6,913.62	6,913.86	0.24	6,900.33	13.53	6.32	0.86	7.18	6,906.68	6907.37	3.7 - 13.7	Chinle/Alluvial Interface
		12/04/17	2.00	6,913.62	6,913.86	0.24	6,900.33	13.75	6.20	0.65	6.85	6,907.01	6907.53	3.7 - 13.7	Chinle/Alluvial Interface
		02/12/18	2.00	6,913.62	6,913.86	0.24	6,900.33	13.53	6.15	1.95	8.10	6,905.76	6907.32	3.7 - 13.7	Chinle/Alluvial Interface
		04/25/18	2.00	6,913.62	6,913.86	0.24	6,900.33	13.76	6.58	1.24	7.82	6,906.04	6907.03	3.7 - 13.7	Chinle/Alluvial Interface
		08/15/18	2.00	6,913.62	6,913.86	0.24	6,900.33	NM	NM	NA	NM	NA	NA	3.7 - 13.7	Chinle/Alluvial Interface
		11/08/18	2.00	6,913.62	6,913.86	0.24	6,900.33	NM	NM	NA	NM	NA	NA	3.7 - 13.7	Chinle/Alluvial Interface
		03/28/19	2.00	6,913.62	6,913.86	0.24	6,900.33	NM	NM	NA	NM	NA	NA	3.7 - 13.7	Chinle/Alluvial Interface
		05/28/19	2.00	6,913.62	6,913.86	0.24	6,900.33	13.53	7.72	0.16	7.88	6,905.98	6906.11	3.7 - 13.7	Chinle/Alluvial Interface
		08/22/19	2.00	6,913.62	6,913.86	0.24	6,900.33	13.53	7.45	0.08	7.53	6,906.33	6906.39	3.7 - 13.7	Chinle/Alluvial Interface
		10/21/19	2.00	6,913.62	6,913.86	0.24	6,900.33	13.53	7.66	0.20	7.86	6,906.00	6906.16	3.7 - 13.7	Chinle/Alluvial Interface

TABLE 9.1
5-YEAR HISTORICAL DTB/DTW MEASUREMENTS - NON MKTF WELLS

Date of Installation	Well ID Number	Inspection or Sample Date	Casing Diameter (Inch)	Ground Level Elevation (ft)	Well Casing Rim Elevation (ft)	Stick-up length (ft)	Well Casing Bottom Elevation (ft)	Total Well Depth (ft)	Depth to SPH (ft)	SPH Column Thickness (ft)	Depth to Water (ft)	Ground water Elevation (ft)	Corrected Water Table [1] Elevation (ft)	Screened Interval Depth Top to Bottom (ft)	Stratigraphic unit in which screen exists
03/14/08	NAPIS-2	03/10/15	2.00	6,913.40	6,912.65	-0.75	6,899.04	13.61	ND	NA	8.44	6,904.21	NA	4.2 - 14.2	Chinle/Alluvial Interface
		06/02/15	2.00	6,913.40	6,912.65	-0.75	6,899.04	13.61	ND	NA	8.54	6,904.11	NA	4.2 - 14.2	Chinle/Alluvial Interface
		08/10/15	2.00	6,913.40	6,912.65	-0.75	6,899.04	13.61	ND	NA	8.40	6,904.25	NA	4.2 - 14.2	Chinle/Alluvial Interface
		10/28/15	2.00	6,913.40	6,912.65	-0.75	6,899.04	13.61	ND	NA	8.32	6,904.33	NA	4.2 - 14.2	Chinle/Alluvial Interface
		03/01/16	2.00	6,913.40	6,912.65	-0.75	6,899.04	13.61	ND	NA	7.65	6,905.00	NA	4.2 - 14.2	Chinle/Alluvial Interface
		06/07/16	2.00	6,913.40	6,912.65	-0.75	6,899.04	13.61	ND	NA	6.40	6,906.25	NA	4.2 - 14.2	Chinle/Alluvial Interface
		09/01/16	2.00	6,913.40	6,912.65	-0.75	6,899.04	13.61	ND	NA	8.84	6,903.81	NA	4.2 - 14.2	Chinle/Alluvial Interface
		11/14/16	2.00	6,913.40	6,912.65	-0.75	6,899.04	13.61	ND	NA	8.20	6,904.45	NA	4.2 - 14.2	Chinle/Alluvial Interface
		02/21/17	2.00	6,913.40	6,912.65	-0.75	6,899.04	13.61	ND	NA	7.89	6,904.76	NA	4.2 - 14.2	Chinle/Alluvial Interface
		06/01/17	2.00	6,913.40	6,912.65	-0.75	6,899.04	13.61	ND	NA	8.35	6,904.30	NA	4.2 - 14.2	Chinle/Alluvial Interface
		09/05/17	2.00	6,913.40	6,912.65	-0.75	6,899.04	13.61	ND	NA	8.32	6,904.33	NA	4.2 - 14.2	Chinle/Alluvial Interface
		12/04/17	2.00	6,913.40	6,912.65	-0.75	6,899.04	14.60	ND	NA	7.98	6,904.67	NA	4.2 - 14.2	Chinle/Alluvial Interface
		02/09/18	2.00	6,913.40	6,912.65	-0.75	6,899.04	14.60	ND	NA	8.25	6,904.40	NA	4.2 - 14.2	Chinle/Alluvial Interface
		04/26/18	2.00	6,913.40	6,912.65	-0.75	6,899.04	14.52	ND	NA	8.58	6,904.07	NA	4.2 - 14.2	Chinle/Alluvial Interface
		08/15/18	2.00	6,913.40	6,912.65	-0.75	6,899.04	NM	NM	NA	NM	NA	NA	4.2 - 14.2	Chinle/Alluvial Interface
		11/08/18	2.00	6,913.40	6,912.65	-0.75	6,899.04	NM	NM	NA	NM	NA	NA	4.2 - 14.2	Chinle/Alluvial Interface
		03/28/19	2.00	6,913.40	6,912.65	-0.75	6,899.04	NM	NM	NA	NM	NA	NA	4.2 - 14.2	Chinle/Alluvial Interface
		05/28/19	2.00	6,913.40	6,912.65	-0.75	6,899.04	13.61	ND	NA	9.54	6,903.11	NA	4.2 - 14.2	Chinle/Alluvial Interface
		08/22/19	2.00	6,913.40	6,912.65	-0.75	6,899.04	13.61	ND	NA	9.15	6,903.50	NA	4.2 - 14.2	Chinle/Alluvial Interface
		10/21/19	2.00	6,913.40	6,912.65	-0.75	6,899.04	13.61	ND	NA	9.40	6,903.25	NA	4.2 - 14.2	Chinle/Alluvial Interface

TABLE 9.1
5-YEAR HISTORICAL DTB/DTW MEASUREMENTS - NON MKTF WELLS

Date of Installation	Well ID Number	Inspection or Sample Date	Casing Diameter (Inch)	Ground Level Elevation (ft)	Well Casing Rim Elevation (ft)	Stick-up length (ft)	Well Casing Bottom Elevation (ft)	Total Well Depth (ft)	Depth to SPH (ft)	SPH Column Thickness (ft)	Depth to Water (ft)	Ground water Elevation (ft)	Corrected Water Table [1] Elevation (ft)	Screened Interval Depth Top to Bottom (ft)	Stratigraphic unit in which screen exists
03/14/08	NAPIS-3	03/10/15	2.00	6,913.38	6,912.76	-0.62	6,882.34	30.42	ND	NA	9.59	6,903.17	NA	25.4 - 30-4	Chinle/Alluvial Interface
		06/02/15	2.00	6,913.38	6,912.76	-0.62	6,882.34	30.42	ND	NA	9.10	6,903.66	NA	25.4 - 30-4	Chinle/Alluvial Interface
		08/10/15	2.00	6,913.38	6,912.76	-0.62	6,882.34	30.42	ND	NA	8.49	6,904.27	NA	25.4 - 30-4	Chinle/Alluvial Interface
		10/28/15	2.00	6,913.38	6,912.76	-0.62	6,882.34	30.42	ND	NA	9.22	6,903.54	NA	25.4 - 30-4	Chinle/Alluvial Interface
		03/01/16	2.00	6,913.38	6,912.76	-0.62	6,882.34	30.42	ND	NA	8.55	6,904.21	NA	25.4 - 30-4	Chinle/Alluvial Interface
		06/07/16	2.00	6,913.38	6,912.76	-0.62	6,882.34	30.42	ND	NA	7.72	6,905.04	NA	25.4 - 30-4	Chinle/Alluvial Interface
		09/01/16	2.00	6,913.38	6,912.76	-0.62	6,882.34	30.42	ND	NA	9.10	6,903.66	NA	25.4 - 30-4	Chinle/Alluvial Interface
		11/14/16	2.00	6,913.38	6,912.76	-0.62	6,882.34	30.42	ND	NA	9.11	6,903.65	NA	25.4 - 30-4	Chinle/Alluvial Interface
		02/21/17	2.00	6,913.38	6,912.76	-0.62	6,882.34	30.42	ND	NA	9.20	6,903.56	NA	25.4 - 30-4	Chinle/Alluvial Interface
		06/01/17	2.00	6,913.38	6,912.76	-0.62	6,882.34	30.42	ND	NA	10.20	6,902.56	NA	25.4 - 30-4	Chinle/Alluvial Interface
		09/08/17	2.00	6,913.38	6,912.76	-0.62	6,882.34	30.42	ND	NA	9.10	6,903.66	NA	25.4 - 30-4	Chinle/Alluvial Interface
		12/14/17	2.00	6,913.38	6,912.76	-0.62	6,882.34	31.58	ND	NA	9.00	6,903.76	NA	25.4 - 30-4	Chinle/Alluvial Interface
		02/09/18	2.00	6,913.38	6,912.76	-0.62	6,882.34	31.60	ND	NA	9.70	6,903.06	NA	25.4 - 30-4	Chinle/Alluvial Interface
		04/26/18	2.00	6,913.38	6,912.76	-0.62	6,882.34	31.51	ND	NA	9.60	6,903.16	NA	25.4 - 30-4	Chinle/Alluvial Interface
		08/15/18	2.00	6,913.38	6,912.76	-0.62	6,882.34	NM	NM	NA	NM	NA	NA	25.4 - 30-4	Chinle/Alluvial Interface
		11/08/18	2.00	6,913.38	6,912.76	-0.62	6,882.34	NM	NM	NA	NM	NA	NA	25.4 - 30-4	Chinle/Alluvial Interface
		03/28/19	2.00	6,913.38	6,912.76	-0.62	6,882.34	NM	NM	NA	NM	NA	NA	25.4 - 30-4	Chinle/Alluvial Interface
		05/28/19	2.00	6,913.38	6,912.76	-0.62	6,882.34	30.42	ND	NA	10.57	6,902.19	NA	25.4 - 30-4	Chinle/Alluvial Interface
		08/22/19	2.00	6,913.38	6,912.76	-0.62	6,882.34	30.42	ND	NA	10.18	6,902.58	NA	25.4 - 30-4	Chinle/Alluvial Interface
		10/21/19	2.00	6,913.38	6,912.76	-0.62	6,882.34	30.42	ND	NA	10.02	6,902.74	NA	25.4 - 30-4	Chinle/Alluvial Interface

TABLE 9.1
5-YEAR HISTORICAL DTB/DTW MEASUREMENTS - NON MKTF WELLS

Date of Installation	Well ID Number	Inspection or Sample Date	Casing Diameter (Inch)	Ground Level Elevation (ft)	Well Casing Rim Elevation (ft)	Stick-up length (ft)	Well Casing Bottom Elevation (ft)	Total Well Depth (ft)	Depth to SPH (ft)	SPH Column Thickness (ft)	Depth to Water (ft)	Ground water Elevation (ft)	Corrected Water Table [1] Elevation (ft)	Screened Interval Depth Top to Bottom (ft)	Stratigraphic unit in which screen exists
07/17/12	OAPIS-1	03/10/15	2.00	6,914.37	6,916.73	2.36	6,888.37	28.30	ND	NA	11.84	6,904.89	NA	16 - 26	Chinle/Alluvial Interface
		06/02/15	2.00	6,914.37	6,916.73	2.36	6,888.37	28.30	ND	NA	12.01	6,904.72	NA	16 - 26	Chinle/Alluvial Interface
		08/10/15	2.00	6,914.37	6,916.73	2.36	6,888.37	28.30	ND	NA	11.33	6,905.40	NA	16 - 26	Chinle/Alluvial Interface
		10/29/15	2.00	6,914.37	6,916.73	2.36	6,888.37	28.30	ND	NA	11.02	6,905.71	NA	16 - 26	Chinle/Alluvial Interface
		03/01/16	2.00	6,914.37	6,916.73	2.36	6,888.37	28.30	ND	NA	11.86	6,904.87	NA	16 - 26	Chinle/Alluvial Interface
		06/07/16	2.00	6,914.37	6,916.73	2.36	6,888.37	28.30	ND	NA	11.50	6,905.23	NA	16 - 26	Chinle/Alluvial Interface
		09/01/16	2.00	6,914.37	6,916.73	2.36	6,888.37	28.30	ND	NA	11.32	6,905.41	NA	16 - 26	Chinle/Alluvial Interface
		11/14/16	2.00	6,914.37	6,916.73	2.36	6,888.37	28.30	ND	NA	11.44	6,905.29	NA	16 - 26	Chinle/Alluvial Interface
		02/21/17	2.00	6,914.37	6,916.73	2.36	6,888.37	28.30	ND	NA	11.60	6,905.13	NA	16 - 26	Chinle/Alluvial Interface
		06/01/17	2.00	6,914.37	6,916.73	2.36	6,888.37	28.30	ND	NA	11.46	6,905.27	NA	16 - 26	Chinle/Alluvial Interface
		09/05/17	2.00	6,914.37	6,916.73	2.36	6,888.37	28.30	ND	NA	11.09	6,905.64	NA	16 - 26	Chinle/Alluvial Interface
		12/04/17	2.00	6,914.37	6,916.73	2.36	6,888.37	27.78	ND	NA	11.88	6,904.85	NA	16 - 26	Chinle/Alluvial Interface
		02/09/18	2.00	6,914.37	6,916.73	2.36	6,888.37	27.78	ND	NA	12.60	6,904.13	NA	16 - 26	Chinle/Alluvial Interface
		04/26/18	2.00	6,914.37	6,916.73	2.36	6,888.37	27.75	ND	NA	12.42	6,904.31	NA	16 - 26	Chinle/Alluvial Interface
		08/15/18	2.00	6,914.37	6,916.73	2.36	6,888.37	27.86	ND	NA	11.60	6,905.13	NA	16 - 26	Chinle/Alluvial Interface
		11/19/18	2.00	6,914.37	6,916.73	2.36	6,888.37	27.78	ND	NA	11.89	6,904.84	NA	16 - 26	Chinle/Alluvial Interface
		03/28/19	2.00	6,914.37	6,916.73	2.36	6,888.37	26.00	ND	NA	11.43	6,905.30	NA	16 - 26	Chinle/Alluvial Interface
		05/08/19	2.00	6,914.37	6,916.73	2.36	6,888.37	26.00	ND	NA	12.09	6,904.64	NA	16 - 26	Chinle/Alluvial Interface
		08/22/19	2.00	6,914.37	6,916.73	2.36	6,888.37	27.86	ND	NA	11.09	6,905.64	NA	16 - 26	Chinle/Alluvial Interface
		10/21/19	2.00	6,914.37	6,916.73	2.36	6,888.37	27.78	ND	NA	11.44	6,905.29	NA	16 - 26	Chinle/Alluvial Interface

TABLE 9.1
5-YEAR HISTORICAL DTB/DTW MEASUREMENTS - NON MKTF WELLS

Date of Installation	Well ID Number	Inspection or Sample Date	Casing Diameter (Inch)	Ground Level Elevation (ft)	Well Casing Rim Elevation (ft)	Stick-up length (ft)	Well Casing Bottom Elevation (ft)	Total Well Depth (ft)	Depth to SPH (ft)	SPH Column Thickness (ft)	Depth to Water (ft)	Ground water Elevation (ft)	Corrected Water Table [1] Elevation (ft)	Screened Interval Depth Top to Bottom (ft)	Stratigraphic unit in which screen exists
01/05/81	OW-1	03/09/15	4.00	6,866.32	6,866.62	0.30	6,772.07	94.55	ND	NA	0.00	6,866.62	NA	89.3 - 99.3	Sonsela Sandstone
		06/03/15	4.00	6,866.32	6,866.62	0.30	6,772.07	94.55	ND	NA	0.00	6,866.62	NA	89.3 - 99.3	Sonsela Sandstone
		08/12/15	4.00	6,866.32	6,866.62	0.30	6,772.07	94.55	ND	NA	0.00	6,866.62	NA	89.3 - 99.3	Sonsela Sandstone
		10/28/15	4.00	6,866.32	6,866.62	0.30	6,772.07	94.55	ND	NA	0.00	6,866.62	NA	89.3 - 99.3	Sonsela Sandstone
		03/03/16	4.00	6,866.32	6,866.62	0.30	6,772.07	94.55	ND	NA	0.00	6,866.62	NA	89.3 - 99.3	Sonsela Sandstone
		06/06/16	4.00	6,866.32	6,866.62	0.30	6,772.07	94.55	ND	NA	0.00	6,866.62	NA	89.3 - 99.3	Sonsela Sandstone
		09/06/16	4.00	6,866.32	6,866.62	0.30	6,772.07	94.55	ND	NA	0.00	6,866.62	NA	89.3 - 99.3	Sonsela Sandstone
		11/15/16	4.00	6,866.32	6,866.62	0.30	6,772.07	94.55	ND	NA	1.72	6,864.90	NA	89.3 - 99.3	Sonsela Sandstone
		02/27/17	4.00	6,866.32	6,866.62	0.30	6,772.07	94.55	ND	NA	1.71	6,864.91	NA	89.3 - 99.3	Sonsela Sandstone
		05/31/17	4.00	6,866.32	6,866.62	0.30	6,772.07	94.55	ND	NA	1.77	6,864.85	NA	89.3 - 99.3	Sonsela Sandstone
		09/06/17	4.00	6,866.32	6,866.62	0.30	6,772.07	94.55	ND	NA	1.70	6,864.92	NA	89.3 - 99.3	Sonsela Sandstone
		12/08/17	4.00	6,866.32	6,866.62	0.30	6,772.07	94.55	ND	NA	1.71	6,864.91	NA	89.3 - 99.3	Sonsela Sandstone
		02/27/18	4.00	6,866.32	6,866.62	0.30	6,772.07	94.55	ND	NA	1.45	6,865.17	NA	89.3 - 99.3	Sonsela Sandstone
		04/25/18	4.00	6,866.32	6,866.62	0.30	6,772.07	94.54	ND	NA	1.80	6,864.82	NA	89.3 - 99.3	Sonsela Sandstone
		08/14/18	4.00	6,866.32	6,866.62	0.30	6,772.07	94.55	ND	NA	1.80	6,864.82	NA	89.3 - 99.3	Sonsela Sandstone
		11/07/18	4.00	6,866.32	6,866.62	0.30	6,772.07	94.55	ND	NA	1.33	6,865.29	NA	89.3 - 99.3	Sonsela Sandstone
		03/27/19	4.00	6,866.32	6,866.62	0.30	6,772.07	94.55	ND	NA	1.69	6,864.93	NA	89.3 - 99.3	Sonsela Sandstone
		05/21/19	4.00	6,866.32	6,866.62	0.30	6,772.07	94.55	ND	NA	1.73	6,864.89	NA	89.3 - 99.3	Sonsela Sandstone
		08/15/19	4.00	6,866.32	6,866.62	0.30	6,772.07	94.55	ND	NA	1.37	6,865.25	NA	89.3 - 99.3	Sonsela Sandstone
		10/16/19	4.00	6,866.32	6,866.62	0.30	6,772.07	94.55	ND	NA	1.45	6,865.17	NA	89.3 - 99.3	Sonsela Sandstone

TABLE 9.1
5-YEAR HISTORICAL DTB/DTW MEASUREMENTS - NON MKTF WELLS

Date of Installation	Well ID Number	Inspection or Sample Date	Casing Diameter (Inch)	Ground Level Elevation (ft)	Well Casing Rim Elevation (ft)	Stick-up length (ft)	Well Casing Bottom Elevation (ft)	Total Well Depth (ft)	Depth to SPH (ft)	SPH Column Thickness (ft)	Depth to Water (ft)	Ground water Elevation (ft)	Corrected Water Table [1] Elevation (ft)	Screened Interval Depth Top to Bottom (ft)	Stratigraphic unit in which screen exists
11/25/80	OW-10	03/09/15	4.00	6,873.67	6,874.91	1.24	6,814.58	60.33	ND	NA	0.96	6,873.95	NA	40 - 60	Sonsela Sandstone
		06/03/15	4.00	6,873.67	6,874.91	1.24	6,814.58	60.33	ND	NA	1.00	6,873.91	NA	40 - 60	Sonsela Sandstone
		08/12/15	4.00	6,873.67	6,874.91	1.24	6,814.58	60.33	ND	NA	0.38	6,874.53	NA	40 - 60	Sonsela Sandstone
		10/28/15	4.00	6,873.67	6,874.91	1.24	6,814.58	60.33	ND	NA	1.47	6,873.44	NA	40 - 60	Sonsela Sandstone
		03/03/16	4.00	6,873.67	6,874.91	1.24	6,814.58	60.33	ND	NA	1.42	6,873.49	NA	40 - 60	Sonsela Sandstone
		06/06/16	4.00	6,873.67	6,874.91	1.24	6,814.58	60.33	ND	NA	1.22	6,873.69	NA	40 - 60	Sonsela Sandstone
		09/06/16	4.00	6,873.67	6,874.91	1.24	6,814.58	60.33	ND	NA	1.70	6,873.21	NA	40 - 60	Sonsela Sandstone
		11/15/16	4.00	6,873.67	6,874.91	1.24	6,814.58	60.33	ND	NA	0.54	6,874.37	NA	40 - 60	Sonsela Sandstone
		02/27/17	4.00	6,873.67	6,874.91	1.24	6,814.58	60.33	ND	NA	0.56	6,874.35	NA	40 - 60	Sonsela Sandstone
		05/31/17	4.00	6,873.67	6,874.91	1.24	6,814.58	60.33	ND	NA	1.07	6,873.84	NA	40 - 60	Sonsela Sandstone
		09/07/17	4.00	6,873.67	6,874.91	1.24	6,814.58	60.33	ND	NA	1.88	6,873.03	NA	40 - 60	Sonsela Sandstone
		12/07/17	4.00	6,873.67	6,874.91	1.24	6,814.58	60.33	ND	NA	2.25	6,872.66	NA	40 - 60	Sonsela Sandstone
		02/27/18	4.00	6,873.67	6,874.91	1.24	6,814.58	60.33	ND	NA	1.98	6,872.93	NA	40 - 60	Sonsela Sandstone
		04/25/18	4.00	6,873.67	6,874.91	1.24	6,814.58	60.13	ND	NA	1.86	6,873.05	NA	40 - 60	Sonsela Sandstone
		08/15/18	4.00	6,873.67	6,874.91	1.24	6,814.58	60.13	ND	NA	2.41	6,872.50	NA	40 - 60	Sonsela Sandstone
		11/08/18	4.00	6,873.67	6,874.91	1.24	6,814.58	60.33	ND	NA	2.50	6,872.41	NA	40 - 60	Sonsela Sandstone
		03/27/19	4.00	6,873.67	6,874.91	1.24	6,814.58	60.33	ND	NA	0.00	6,874.91	NA	40 - 60	Sonsela Sandstone
		05/22/19	4.00	6,873.67	6,874.91	1.24	6,814.58	60.33	ND	NA	0.00	6,874.91	NA	40 - 60	Sonsela Sandstone
		08/15/19	4.00	6,873.67	6,874.91	1.24	6,814.58	60.13	ND	NA	1.02	6,873.89	NA	40 - 60	Sonsela Sandstone
		10/17/19	4.00	6,873.67	6,874.91	1.24	6,814.58	60.33	ND	NA	2.33	6,872.58	NA	40 - 60	Sonsela Sandstone
09/25/81	OW-11	08/10/15	4.00	6,922.05	6,923.51	1.46	6,857.72	65.79	ND	NA	19.30	6,904.21	NA	43 - 65	Sonsela Sandstone
		09/09/16	4.00	6,922.05	6,923.51	1.46	6,857.72	65.79	ND	NA	18.79	6,904.72	NA	43 - 65	Sonsela Sandstone
		09/18/17	4.00	6,922.05	6,923.51	1.46	6,857.72	65.79	ND	NA	18.08	6,905.43	NA	43 - 65	Sonsela Sandstone
		08/15/18	4.00	6,922.05	6,923.51	1.46	6,857.72	65.79	ND	NA	19.20	6,904.31	NA	43 - 65	Sonsela Sandstone
		08/20/19	4.00	6,922.05	6,923.51	1.46	6,857.72	65.79	ND	NA	17.70	6,905.81	NA	43 - 65	Sonsela Sandstone
12/15/80	OW-12	08/13/15	4.00	6,939.57	6,940.69	1.12	6,811.84	128.85	ND	NA	47.42	6,893.27	NA	117.8 - 137.8	Sonsela Sandstone
		09/08/16	4.00	6,939.57	6,940.69	1.12	6,811.84	128.85	ND	NA	47.23	6,893.46	NA	117.8 - 137.8	Sonsela Sandstone
		09/19/17	4.00	6,939.57	6,940.69	1.12	6,811.84	128.85	ND	NA	46.74	6,893.95	NA	117.8 - 137.8	Sonsela Sandstone
		08/15/18	4.00	6,939.57	6,940.69	1.12	6,811.84	128.85	ND	NA	46.50	6,894.19	NA	117.8 - 137.8	Sonsela Sandstone
		08/21/19	4.00	6,939.57	6,940.69	1.12	6,811.84	128.85	ND	NA	45.92	6,894.77	NA	117.8 - 137.8	Sonsela Sandstone
		12/03/19	4.00	6,939.57	6,940.69	1.12	6,811.84	128.85	ND	NA	45.10	6,895.59	NA	117.8 - 137.8	Sonsela Sandstone

Released to Imaging: 11/23/2022 9:27:32 AM

TABLE 9.1
5-YEAR HISTORICAL DTB/DTW MEASUREMENTS - NON MKTF WELLS

Date of Installation	Well ID Number	Inspection or Sample Date	Casing Diameter (Inch)	Ground Level Elevation (ft)	Well Casing Rim Elevation (ft)	Stick-up length (ft)	Well Casing Bottom Elevation (ft)	Total Well Depth (ft)	Depth to SPH (ft)	SPH Column Thickness (ft)	Depth to Water (ft)	Ground water Elevation (ft)	Corrected Water Table [1] Elevation (ft)	Screened Interval Depth Top to Bottom (ft)	Stratigraphic unit in which screen exists
12/10/80	OW-13	03/09/15	4.00	6,918.95	6,920.07	1.12	6,820.92	99.15	ND	NA	21.92	6,898.15	NA	78.2 - 98.2	Sonsela Sandstone
		06/01/15	4.00	6,918.95	6,920.07	1.12	6,820.92	99.15	ND	NA	21.76	6,898.31	NA	78.2 - 98.2	Sonsela Sandstone
		08/10/15	4.00	6,918.95	6,920.07	1.12	6,820.92	99.15	ND	NA	22.14	6,897.93	NA	78.2 - 98.2	Sonsela Sandstone
		10/27/15	4.00	6,918.95	6,920.07	1.12	6,820.92	99.15	ND	NA	22.10	6,897.97	NA	78.2 - 98.2	Sonsela Sandstone
		03/04/16	4.00	6,918.95	6,920.07	1.12	6,820.92	99.15	ND	NA	21.43	6,898.64	NA	78.2 - 98.2	Sonsela Sandstone
		06/06/16	4.00	6,918.95	6,920.07	1.12	6,820.92	99.15	ND	NA	21.45	6,898.62	NA	78.2 - 98.2	Sonsela Sandstone
		08/31/16	4.00	6,918.95	6,920.07	1.12	6,820.92	99.15	ND	NA	21.94	6,898.13	NA	78.2 - 98.2	Sonsela Sandstone
		11/15/16	4.00	6,918.95	6,920.07	1.12	6,820.92	99.15	ND	NA	21.68	6,898.39	NA	78.2 - 98.2	Sonsela Sandstone
		02/27/17	4.00	6,918.95	6,920.07	1.12	6,820.92	99.15	ND	NA	21.11	6,898.96	NA	78.2 - 98.2	Sonsela Sandstone
		05/31/17	4.00	6,918.95	6,920.07	1.12	6,820.92	99.15	ND	NA	21.45	6,898.62	NA	78.2 - 98.2	Sonsela Sandstone
		09/06/17	4.00	6,918.95	6,920.07	1.12	6,820.92	99.15	ND	NA	21.41	6,898.66	NA	78.2 - 98.2	Sonsela Sandstone
		12/11/17	4.00	6,918.95	6,920.07	1.12	6,820.92	99.15	ND	NA	21.00	6,899.07	NA	78.2 - 98.2	Sonsela Sandstone
		02/28/18	4.00	6,918.95	6,920.07	1.12	6,820.92	99.15	ND	NA	20.50	6,899.57	NA	78.2 - 98.2	Sonsela Sandstone
		04/26/18	4.00	6,918.95	6,920.07	1.12	6,820.92	99.00	ND	NA	20.41	6,899.66	NA	78.2 - 98.2	Sonsela Sandstone
		08/14/18	4.00	6,918.95	6,920.07	1.12	6,820.92	102.00	ND	NA	20.70	6,899.37	NA	78.2 - 98.2	Sonsela Sandstone
		11/06/18	4.00	6,918.95	6,920.07	1.12	6,820.92	99.15	ND	NA	20.70	6,899.37	NA	78.2 - 98.2	Sonsela Sandstone
		02/05/19	4.00	6,918.95	6,920.07	1.12	6,820.92	99.15	ND	NA	20.38	6,899.69	NA	78.2 - 98.2	Sonsela Sandstone
		05/01/19	4.00	6,918.95	6,920.07	1.12	6,820.92	99.15	ND	NA	20.00	6,900.07	NA	78.2 - 98.2	Sonsela Sandstone
		08/12/19	4.00	6,918.95	6,920.07	1.12	6,820.92	102.00	ND	NA	20.50	6,899.57	NA	78.2 - 98.2	Sonsela Sandstone
		10/14/19	4.00	6,918.95	6,920.07	1.12	6,820.92	99.15	ND	NA	20.74	6,899.33	NA	78.2 - 98.2	Sonsela Sandstone

TABLE 9.1
5-YEAR HISTORICAL DTB/DTW MEASUREMENTS - NON MKTF WELLS

Date of Installation	Well ID Number	Inspection or Sample Date	Casing Diameter (Inch)	Ground Level Elevation (ft)	Well Casing Rim Elevation (ft)	Stick-up length (ft)	Well Casing Bottom Elevation (ft)	Total Well Depth (ft)	Depth to SPH (ft)	SPH Column Thickness (ft)	Depth to Water (ft)	Ground water Elevation (ft)	Corrected Water Table [1] Elevation (ft)	Screened Interval Depth Top to Bottom (ft)	Stratigraphic unit in which screen exists
12/17/80	OW-14	03/09/15	4.00	6,924.55	6,926.65	2.10	6,880.13	46.52	ND	NA	23.95	6,902.70	NA	35 - 45	Chinle/Alluvial Interface
		06/01/15	4.00	6,924.55	6,926.65	2.10	6,880.13	46.52	ND	NA	23.88	6,902.77	NA	35 - 45	Chinle/Alluvial Interface
		08/10/15	4.00	6,924.55	6,926.65	2.10	6,880.13	46.52	ND	NA	23.96	6,902.69	NA	35 - 45	Chinle/Alluvial Interface
		10/27/15	4.00	6,924.55	6,926.65	2.10	6,880.13	46.52	ND	NA	23.69	6,902.96	NA	35 - 45	Chinle/Alluvial Interface
		03/04/16	4.00	6,924.55	6,926.65	2.10	6,880.13	46.52	ND	NA	23.20	6,903.45	NA	35 - 45	Chinle/Alluvial Interface
		06/06/16	4.00	6,924.55	6,926.65	2.10	6,880.13	46.52	ND	NA	23.18	6,903.47	NA	35 - 45	Chinle/Alluvial Interface
		08/31/16	4.00	6,924.55	6,926.65	2.10	6,880.13	46.52	ND	NA	23.50	6,903.15	NA	35 - 45	Chinle/Alluvial Interface
		11/15/16	4.00	6,924.55	6,926.65	2.10	6,880.13	46.52	ND	NA	23.28	6,903.37	NA	35 - 45	Chinle/Alluvial Interface
		02/27/17	4.00	6,924.55	6,926.65	2.10	6,880.13	46.52	ND	NA	22.83	6,903.82	NA	35 - 45	Chinle/Alluvial Interface
		05/30/17	4.00	6,924.55	6,926.65	2.10	6,880.13	46.52	ND	NA	23.18	6,903.47	NA	35 - 45	Chinle/Alluvial Interface
		09/06/17	4.00	6,924.55	6,926.65	2.10	6,880.13	46.52	ND	NA	22.56	6,904.09	NA	35 - 45	Chinle/Alluvial Interface
		12/11/17	4.00	6,924.55	6,926.65	2.10	6,880.13	46.52	ND	NA	22.20	6,904.45	NA	35 - 45	Chinle/Alluvial Interface
		02/27/18	4.00	6,924.55	6,926.65	2.10	6,880.13	46.52	ND	NA	21.80	6,904.85	NA	35 - 45	Chinle/Alluvial Interface
		04/26/18	4.00	6,924.55	6,926.65	2.10	6,880.13	46.75	ND	NA	21.75	6,904.90	NA	35 - 45	Chinle/Alluvial Interface
		08/14/18	4.00	6,924.55	6,926.65	2.10	6,880.13	46.78	ND	NA	21.95	6,904.70	NA	35 - 45	Chinle/Alluvial Interface
		11/06/18	4.00	6,924.55	6,926.65	2.10	6,880.13	46.52	ND	NA	21.82	6,904.83	NA	35 - 45	Chinle/Alluvial Interface
		02/05/19	4.00	6,924.55	6,926.65	2.10	6,880.13	46.52	ND	NA	21.64	6,905.01	NA	35 - 45	Chinle/Alluvial Interface
		05/01/19	4.00	6,924.55	6,926.65	2.10	6,880.13	46.52	ND	NA	21.45	6,905.20	NA	35 - 45	Chinle/Alluvial Interface
		08/12/19	4.00	6,924.55	6,926.65	2.10	6,880.13	46.78	NM	NA	NM	NA	NA	35 - 45	Chinle/Alluvial Interface
		11/01/19	4.00	6,924.55	6,926.65	2.10	6,880.13	46.52	NM	NA	NM	NA	NA	35 - 45	Chinle/Alluvial Interface

TABLE 9.1
5-YEAR HISTORICAL DTB/DTW MEASUREMENTS - NON MKTF WELLS

Date of Installation	Well ID Number	Inspection or Sample Date	Casing Diameter (Inch)	Ground Level Elevation (ft)	Well Casing Rim Elevation (ft)	Stick-up length (ft)	Well Casing Bottom Elevation (ft)	Total Well Depth (ft)	Depth to SPH (ft)	SPH Column Thickness (ft)	Depth to Water (ft)	Ground water Elevation (ft)	Corrected Water Table [1] Elevation (ft)	Screened Interval Depth Top to Bottom (ft)	Stratigraphic unit in which screen exists
08/23/96	OW-29	03/09/15	4.00	6,913.89	6,917.00	3.11	6,865.92	51.08	ND	NA	18.67	6,898.33	NA	37.5 - 47.5	Chinle/Alluvial Interface
		06/01/15	4.00	6,913.89	6,917.00	3.11	6,865.92	51.08	ND	NA	18.67	6,898.33	NA	37.5 - 47.5	Chinle/Alluvial Interface
		08/10/15	4.00	6,913.89	6,917.00	3.11	6,865.92	51.08	ND	NA	18.94	6,898.06	NA	37.5 - 47.5	Chinle/Alluvial Interface
		10/27/15	4.00	6,913.89	6,917.00	3.11	6,865.92	51.08	ND	NA	18.72	6,898.28	NA	37.5 - 47.5	Chinle/Alluvial Interface
		03/04/16	4.00	6,913.89	6,917.00	3.11	6,865.92	51.08	ND	NA	18.15	6,898.85	NA	37.5 - 47.5	Chinle/Alluvial Interface
		06/06/16	4.00	6,913.89	6,917.00	3.11	6,865.92	51.08	ND	NA	18.16	6,898.84	NA	37.5 - 47.5	Chinle/Alluvial Interface
		08/31/16	4.00	6,913.89	6,917.00	3.11	6,865.92	51.08	ND	NA	18.60	6,898.40	NA	37.5 - 47.5	Chinle/Alluvial Interface
		11/15/16	4.00	6,913.89	6,917.00	3.11	6,865.92	51.08	ND	NA	18.23	6,898.77	NA	37.5 - 47.5	Chinle/Alluvial Interface
		02/27/17	4.00	6,913.89	6,917.00	3.11	6,865.92	51.08	ND	NA	17.82	6,899.18	NA	37.5 - 47.5	Chinle/Alluvial Interface
		05/30/17	4.00	6,913.89	6,917.00	3.11	6,865.92	51.08	ND	NA	18.16	6,898.84	NA	37.5 - 47.5	Chinle/Alluvial Interface
		09/06/17	4.00	6,913.89	6,917.00	3.11	6,865.92	51.08	ND	NA	18.05	6,898.95	NA	37.5 - 47.5	Chinle/Alluvial Interface
		12/11/17	4.00	6,913.89	6,917.00	3.11	6,865.92	51.08	ND	NA	17.50	6,899.50	NA	37.5 - 47.5	Chinle/Alluvial Interface
		02/27/18	4.00	6,913.89	6,917.00	3.11	6,865.92	51.08	ND	NA	17.12	6,899.88	NA	37.5 - 47.5	Chinle/Alluvial Interface
		04/26/18	4.00	6,913.89	6,917.00	3.11	6,865.92	51.90	ND	NA	16.98	6,900.02	NA	37.5 - 47.5	Chinle/Alluvial Interface
		08/14/18	4.00	6,913.89	6,917.00	3.11	6,865.92	52.40	ND	NA	17.52	6,899.48	NA	37.5 - 47.5	Chinle/Alluvial Interface
		11/06/18	4.00	6,913.89	6,917.00	3.11	6,865.92	51.08	ND	NA	17.22	6,899.78	NA	37.5 - 47.5	Chinle/Alluvial Interface
		02/05/19	4.00	6,913.89	6,917.00	3.11	6,865.92	51.08	ND	NA	16.92	6,900.08	NA	37.5 - 47.5	Chinle/Alluvial Interface
		05/01/19	4.00	6,913.89	6,917.00	3.11	6,865.92	51.08	ND	NA	16.71	6,900.29	NA	37.5 - 47.5	Chinle/Alluvial Interface
		08/12/19	4.00	6,913.89	6,917.00	3.11	6,865.92	52.40	ND	NA	17.16	6,899.84	NA	37.5 - 47.5	Chinle/Alluvial Interface
		10/14/19	4.00	6,913.89	6,917.00	3.11	6,865.92	51.08	ND	NA	17.24	6,899.76	NA	37.5 - 47.5	Chinle/Alluvial Interface

TABLE 9.1
5-YEAR HISTORICAL DTB/DTW MEASUREMENTS - NON MKTF WELLS

Date of Installation	Well ID Number	Inspection or Sample Date	Casing Diameter (Inch)	Ground Level Elevation (ft)	Well Casing Rim Elevation (ft)	Stick-up length (ft)	Well Casing Bottom Elevation (ft)	Total Well Depth (ft)	Depth to SPH (ft)	SPH Column Thickness (ft)	Depth to Water (ft)	Ground water Elevation (ft)	Corrected Water Table [1] Elevation (ft)	Screened Interval Depth Top to Bottom (ft)	Stratigraphic unit in which screen exists
08/28/96	OW-30	03/09/15	4.00	6,921.81	6,924.69	2.88	6,874.79	49.90	ND	NA	23.25	6,901.44	NA	37.9 - 47.9	Chinle/Alluvial Interface
		06/01/15	4.00	6,921.81	6,924.69	2.88	6,874.79	49.90	ND	NA	23.20	6,901.49	NA	37.9 - 47.9	Chinle/Alluvial Interface
		08/10/15	4.00	6,921.81	6,924.69	2.88	6,874.79	49.90	ND	NA	23.42	6,901.27	NA	37.9 - 47.9	Chinle/Alluvial Interface
		10/27/15	4.00	6,921.81	6,924.69	2.88	6,874.79	49.90	ND	NA	23.14	6,901.55	NA	37.9 - 47.9	Chinle/Alluvial Interface
		03/08/16	4.00	6,921.81	6,924.69	2.88	6,874.79	49.90	ND	NA	22.55	6,902.14	NA	37.9 - 47.9	Chinle/Alluvial Interface
		06/06/16	4.00	6,921.81	6,924.69	2.88	6,874.79	49.90	ND	NA	22.64	6,902.05	NA	37.9 - 47.9	Chinle/Alluvial Interface
		08/31/16	4.00	6,921.81	6,924.69	2.88	6,874.79	49.90	ND	NA	23.30	6,901.39	NA	37.9 - 47.9	Chinle/Alluvial Interface
		11/14/16	4.00	6,921.81	6,924.69	2.88	6,874.79	49.90	ND	NA	22.75	6,901.94	NA	37.9 - 47.9	Chinle/Alluvial Interface
		02/27/17	4.00	6,921.81	6,924.69	2.88	6,874.79	49.90	ND	NA	22.24	6,902.45	NA	37.9 - 47.9	Chinle/Alluvial Interface
		05/31/17	4.00	6,921.81	6,924.69	2.88	6,874.79	49.90	ND	NA	22.64	6,902.05	NA	37.9 - 47.9	Chinle/Alluvial Interface
		09/06/17	4.00	6,921.81	6,924.69	2.88	6,874.79	49.90	ND	NA	22.28	6,902.41	NA	37.9 - 47.9	Chinle/Alluvial Interface
		12/12/17	4.00	6,921.81	6,924.69	2.88	6,874.79	49.90	ND	NA	21.75	6,902.94	NA	37.9 - 47.9	Chinle/Alluvial Interface
		02/28/18	4.00	6,921.81	6,924.69	2.88	6,874.79	49.90	ND	NA	21.33	6,903.36	NA	37.9 - 47.9	Chinle/Alluvial Interface
		04/26/18	4.00	6,921.81	6,924.69	2.88	6,874.79	50.20	ND	NA	21.28	6,903.41	NA	37.9 - 47.9	Chinle/Alluvial Interface
		08/15/18	4.00	6,921.81	6,924.69	2.88	6,874.79	51.40	ND	NA	21.70	6,902.99	NA	37.9 - 47.9	Chinle/Alluvial Interface
		12/03/18	4.00	6,921.81	6,924.69	2.88	6,874.79	49.90	ND	NA	21.30	6,903.39	NA	37.9 - 47.9	Chinle/Alluvial Interface
		03/27/19	4.00	6,921.81	6,924.69	2.88	6,874.79	49.90	ND	NA	21.13	6,903.56	NA	37.9 - 47.9	Chinle/Alluvial Interface
		06/05/19	4.00	6,921.81	6,924.69	2.88	6,874.79	49.90	ND	NA	21.14	6,903.55	NA	37.9 - 47.9	Chinle/Alluvial Interface
		08/12/19	4.00	6,921.81	6,924.69	2.88	6,874.79	51.40	NM	NA	NM	NA	NA	37.9 - 47.9	Chinle/Alluvial Interface
		11/01/19	4.00	6,921.81	6,924.69	2.88	6,874.79	49.90	ND	NA	NM	NA	NA	37.9 - 47.9	Chinle/Alluvial Interface
10/05/09	OW-50	08/10/15	2.00	6,912.63	6,914.21	1.58	6,850.21	64.00	ND	NA	16.47	6,897.74	NA	48 - 63	Chinle/Alluvial Interface
		09/09/16	2.00	6,912.63	6,914.21	1.58	6,850.21	64.00	ND	NA	16.19	6,898.02	NA	48 - 63	Chinle/Alluvial Interface
		09/11/17	2.00	6,912.63	6,914.21	1.58	6,850.21	64.00	ND	NA	15.60	6,898.61	NA	48 - 63	Chinle/Alluvial Interface
		08/14/18	2.00	6,912.63	6,914.21	1.58	6,850.21	65.25	ND	NA	15.12	6,899.09	NA	48 - 63	Chinle/Alluvial Interface
		11/07/18	2.00	6,912.63	6,914.21	1.58	6,850.21	64.00	ND	NA	15.20	6,899.01	NA	48 - 63	Chinle/Alluvial Interface
		03/27/19	2.00	6,912.63	6,914.21	1.58	6,850.21	64.00	ND	NA	14.40	6,899.81	NA	48 - 63	Chinle/Alluvial Interface
		05/01/19	2.00	6,912.63	6,914.21	1.58	6,850.21	64.00	ND	NA	14.39	6,899.82	NA	49 - 63	Chinle/Alluvial Interface
		08/16/19	2.00	6,912.63	6,914.21	1.58	6,850.21	64.00	ND	NA	14.74	6,899.47	NA	50 - 63	Chinle/Alluvial Interface
		10/15/19	2.00	6,912.63	6,914.21	1.58	6,850.21	64.00	ND	NA	14.92	6,899.29	NA	48 - 63	Chinle/Alluvial Interface

TABLE 9.1
5-YEAR HISTORICAL DTB/DTW MEASUREMENTS - NON MKTF WELLS

Date of Installation	Well ID Number	Inspection or Sample Date	Casing Diameter (Inch)	Ground Level Elevation (ft)	Well Casing Rim Elevation (ft)	Stick-up length (ft)	Well Casing Bottom Elevation (ft)	Total Well Depth (ft)	Depth to SPH (ft)	SPH Column Thickness (ft)	Depth to Water (ft)	Ground water Elevation (ft)	Corrected Water Table [1] Elevation (ft)	Screened Interval Depth Top to Bottom (ft)	Stratigraphic unit in which screen exists
10/06/09	OW-52	08/10/15	2.00	6,906.53	6,907.68	1.15	6,829.94	77.74	ND	NA	15.49	6,892.19	NA	64 - 79	Chinle/Alluvial Interface
		09/09/16	2.00	6,906.53	6,907.68	1.15	6,829.94	77.74	ND	NA	15.28	6,892.40	NA	64 - 79	Chinle/Alluvial Interface
		09/11/17	2.00	6,906.53	6,907.68	1.15	6,829.94	77.74	ND	NA	14.85	6,892.83	NA	64 - 79	Chinle/Alluvial Interface
		08/15/18	2.00	6,906.53	6,907.68	1.15	6,829.94	79.00	ND	NA	14.52	6,893.16	NA	64 - 79	Chinle/Alluvial Interface
		11/07/18	2.00	6,906.53	6,907.68	1.15	6,829.94	77.74	ND	NA	14.44	6,893.24	NA	64 - 79	Chinle/Alluvial Interface
		03/27/19	2.00	6,906.53	6,907.68	1.15	6,829.94	77.74	ND	NA	13.97	6,893.71	NA	64 - 79	Chinle/Alluvial Interface
		05/01/19	2.00	6,906.53	6,907.68	1.15	6,829.94	77.74	ND	NA	13.74	6,893.94	NA	65 - 79	Chinle/Alluvial Interface
		08/16/19	2.00	6,906.53	6,907.68	1.15	6,829.94	77.74	ND	NA	14.21	6,893.47	NA	66 - 79	Chinle/Alluvial Interface
		10/15/19	2.00	6,906.53	6,907.68	1.15	6,829.94	77.74	ND	NA	14.40	6,893.28	NA	64 - 79	Chinle/Alluvial Interface
05/31/16	OW-53	03/29/17	2.00	6,911.93	6,914.38	2.45	6,945.83	33.90	ND	NA	DRY	NA	NA	16 - 31	Chinle/Alluvial Interface
		06/21/17	2.00	6,911.93	6,914.38	2.45	6,945.83	33.90	ND	NA	DRY	NA	NA	16 - 31	Chinle/Alluvial Interface
		09/11/17	2.00	6,911.93	6,914.38	2.45	6,945.83	33.90	ND	NA	DRY	NA	NA	16 - 31	Chinle/Alluvial Interface
		12/05/17	2.00	6,911.93	6,914.38	2.45	6,945.83	33.90	ND	NA	DRY	NA	NA	16 - 31	Chinle/Alluvial Interface
		02/21/18	2.00	6,911.93	6,914.38	2.45	6,945.83	33.90	ND	NA	DRY	NA	NA	16 - 31	Chinle/Alluvial Interface
		04/26/18	2.00	6,911.93	6,914.38	2.45	6,945.83	33.90	ND	NA	DRY	NA	NA	16 - 31	Chinle/Alluvial Interface
		08/15/18	2.00	6,911.93	6,914.38	2.45	6,945.84	33.91	ND	NA	DRY	NA	NA	16 - 31	Chinle/Alluvial Interface
		11/06/18	2.00	6,911.93	6,914.38	2.45	6,945.83	33.90	ND	NA	DRY	NA	NA	16 - 31	Chinle/Alluvial Interface
		02/06/19	2.00	6,911.71	6,914.38	2.67	6,945.62	33.91	ND	NA	DRY	NA	NA	16 - 31	Chinle/Alluvial Interface
		05/02/19	2.00	6,911.71	6,914.38	2.67	6,945.62	33.91	ND	NA	DRY	NA	NA	16 - 31	Chinle/Alluvial Interface
		08/21/19	2.00	6,911.71	6,914.38	2.67	6,945.62	33.91	ND	NA	DRY	NA	NA	16 - 31	Chinle/Alluvial Interface
		10/15/19	2.00	6,911.71	6,914.38	2.67	6,945.62	33.91	ND	NA	DRY	NA	NA	16 - 31	Chinle/Alluvial Interface
06/01/16	OW-54	03/29/17	2.00	6,916.36	6,918.92	2.56	6,947.40	31.04	ND	NA	18.44	6,900.48	NA	13 - 28	Chinle/Alluvial Interface
		06/21/17	2.00	6,916.36	6,918.92	2.56	6,947.40	31.04	ND	NA	18.63	6,900.29	NA	13 - 28	Chinle/Alluvial Interface
		09/11/17	2.00	6,916.36	6,918.92	2.56	6,947.40	31.04	ND	NA	18.70	6,900.22	NA	13 - 28	Chinle/Alluvial Interface
		12/05/17	2.00	6,916.36	6,918.92	2.56	6,947.42	31.06	ND	NA	18.27	6,900.65	NA	13 - 28	Chinle/Alluvial Interface
		02/21/18	2.00	6,916.36	6,918.92	2.56	6,947.23	30.87	ND	NA	18.05	6,900.87	NA	13 - 28	Chinle/Alluvial Interface
		04/26/18	2.00	6,916.36	6,918.92	2.56	6,946.06	29.70	ND	NA	17.83	6,901.09	NA	13 - 28	Chinle/Alluvial Interface
		08/14/18	2.00	6,916.36	6,918.92	2.56	6,945.98	29.62	ND	NA	18.23	6,900.69	NA	13 - 28	Chinle/Alluvial Interface
		11/06/18	2.00	6,916.36	6,918.92	2.56	6,947.42	31.06	ND	NA	17.90	6,901.02	NA	13 - 28	Chinle/Alluvial Interface
		02/06/19	2.00	6,916.27	6,918.92	2.65	6,947.31	31.04	ND	NA	17.58	6,901.34	NA	13 - 28	Chinle/Alluvial Interface
		05/02/19	2.00	6,916.27	6,918.92	2.65	6,947.31	31.04	ND	NA	17.52	6,901.40	NA	13 - 28	Chinle/Alluvial Interface
		08/21/19	2.00	6,916.27	6,918.92	2.65	6,945.89	29.62	ND	NA	18.00	6,900.92	NA	13 - 28	Chinle/Alluvial Interface
		10/15/19	2.00	6,916.27	6,918.92	2.65	6,947.33	31.06	ND	NA	18.09	6,900.83	NA	13 - 28	Chinle/Alluvial Interface

TABLE 9.1
5-YEAR HISTORICAL DTB/DTW MEASUREMENTS - NON MKTF WELLS

Date of Installation	Well ID Number	Inspection or Sample Date	Casing Diameter (Inch)	Ground Level Elevation (ft)	Well Casing Rim Elevation (ft)	Stick-up length (ft)	Well Casing Bottom Elevation (ft)	Total Well Depth (ft)	Depth to SPH (ft)	SPH Column Thickness (ft)	Depth to Water (ft)	Ground water Elevation (ft)	Corrected Water Table [1] Elevation (ft)	Screened Interval Depth Top to Bottom (ft)	Stratigraphic unit in which screen exists
06/01/16	OW-55	03/29/17	2.00	6,921.01	6,923.25	2.24	6,951.71	30.70	ND	NA	18.39	6,904.86	NA	13 - 28	Chinle/Alluvial Interface
		06/21/17	2.00	6,921.01	6,923.25	2.24	6,951.71	30.70	ND	NA	18.47	6,904.78	NA	13 - 28	Chinle/Alluvial Interface
		09/11/17	2.00	6,921.01	6,923.25	2.24	6,951.71	30.70	ND	NA	18.49	6,904.76	NA	13 - 28	Chinle/Alluvial Interface
		12/05/17	2.00	6,921.01	6,923.25	2.24	6,951.91	30.90	ND	NA	18.05	6,905.20	NA	13 - 28	Chinle/Alluvial Interface
		02/21/18	2.00	6,921.01	6,923.25	2.24	6,951.96	30.95	ND	NA	17.80	6,905.45	NA	13 - 28	Chinle/Alluvial Interface
		04/26/18	2.00	6,921.01	6,923.25	2.24	6,951.93	30.92	ND	NA	17.61	6,905.64	NA	13 - 28	Chinle/Alluvial Interface
		08/14/18	2.00	6,921.01	6,923.25	2.24	6,951.71	30.70	ND	NA	17.94	6,905.31	NA	13 - 28	Chinle/Alluvial Interface
		11/06/18	2.00	6,921.01	6,923.25	2.24	6,951.91	30.90	ND	NA	17.72	6,905.53	NA	13 - 28	Chinle/Alluvial Interface
		02/06/19	2.00	6,921.02	6,923.25	2.23	6,951.72	30.70	ND	NA	17.37	6,905.88	NA	13 - 28	Chinle/Alluvial Interface
		05/02/19	2.00	6,921.02	6,923.25	2.23	6,951.72	30.70	ND	NA	17.38	6,905.87	NA	13 - 28	Chinle/Alluvial Interface
		08/21/19	2.00	6,921.02	6,923.25	2.23	6,951.72	30.70	ND	NA	17.70	6,905.55	NA	13 - 28	Chinle/Alluvial Interface
		10/15/19	2.00	6,921.02	6,923.25	2.23	6,951.92	30.90	ND	NA	17.73	6,905.52	NA	13 - 28	Chinle/Alluvial Interface
06/01/16	OW-56	03/29/17	2.00	6,917.79	6,920.18	2.39	6,936.38	18.59	ND	NA	12.29	6,907.89	NA	6 - 16	Chinle/Alluvial Interface
		06/21/17	2.00	6,917.79	6,920.18	2.39	6,936.38	18.59	ND	NA	13.53	6,906.65	NA	6 - 16	Chinle/Alluvial Interface
		09/11/17	2.00	6,917.79	6,920.18	2.39	6,936.38	18.59	ND	NA	14.50	6,905.68	NA	6 - 16	Chinle/Alluvial Interface
		12/05/17	2.00	6,917.79	6,920.18	2.39	6,936.37	18.58	ND	NA	13.43	6,906.75	NA	6 - 16	Chinle/Alluvial Interface
		02/21/18	2.00	6,917.79	6,920.18	2.39	6,936.38	18.59	ND	NA	12.84	6,907.34	NA	6 - 16	Chinle/Alluvial Interface
		04/26/18	2.00	6,917.79	6,920.18	2.39	6,936.38	18.59	ND	NA	12.62	6,907.56	NA	6 - 16	Chinle/Alluvial Interface
		08/14/18	2.00	6,917.79	6,920.18	2.39	6,936.38	18.59	ND	NA	13.82	6,906.36	NA	6 - 16	Chinle/Alluvial Interface
		11/06/18	2.00	6,917.79	6,920.18	2.39	6,936.37	18.58	ND	NA	14.05	6,906.13	NA	6 - 16	Chinle/Alluvial Interface
		02/06/19	2.00	6,917.61	6,920.18	2.57	6,936.20	18.59	ND	NA	13.00	6,907.18	NA	6 - 16	Chinle/Alluvial Interface
		05/02/19	2.00	6,917.61	6,920.18	2.57	6,936.20	18.59	ND	NA	12.50	6,907.68	NA	6 - 16	Chinle/Alluvial Interface
		08/21/19	2.00	6,917.61	6,920.18	2.57	6,936.20	18.59	ND	NA	13.66	6,906.52	NA	6 - 16	Chinle/Alluvial Interface
		10/15/19	2.00	6,917.61	6,920.18	2.57	6,936.19	18.58	ND	NA	14.38	6,905.80	NA	6 - 16	Chinle/Alluvial Interface

TABLE 9.1
5-YEAR HISTORICAL DTB/DTW MEASUREMENTS - NON MKTF WELLS

Date of Installation	Well ID Number	Inspection or Sample Date	Casing Diameter (Inch)	Ground Level Elevation (ft)	Well Casing Rim Elevation (ft)	Stick-up length (ft)	Well Casing Bottom Elevation (ft)	Total Well Depth (ft)	Depth to SPH (ft)	SPH Column Thickness (ft)	Depth to Water (ft)	Ground water Elevation (ft)	Corrected Water Table [1] Elevation (ft)	Screened Interval Depth Top to Bottom (ft)	Stratigraphic unit in which screen exists
10/05/16	OW-57	03/30/17	2.00	6,930.64	6,933.10	2.46	6,958.99	28.35	NM	NA	NM	NA	NA	15 - 25	Chinle/Alluvial Interface
		06/20/17	2.00	6,930.64	6,933.10	2.46	6,958.99	28.35	ND	NA	20.52	6,912.58	NA	15 - 25	Chinle/Alluvial Interface
		09/19/17	2.00	6,930.64	6,933.10	2.46	6,958.99	28.35	ND	NA	20.15	6,912.95	NA	15 - 25	Chinle/Alluvial Interface
		12/05/17	2.00	6,930.64	6,933.10	2.46	6,958.99	28.35	ND	NA	20.11	6,912.99	NA	15 - 25	Chinle/Alluvial Interface
		02/19/18	2.00	6,930.64	6,933.10	2.46	6,958.99	28.35	ND	NA	19.88	6,913.22	NA	15 - 25	Chinle/Alluvial Interface
		04/25/18	2.00	6,930.64	6,933.10	2.46	6,958.70	28.06	ND	NA	20.02	6,913.08	NA	15 - 25	Chinle/Alluvial Interface
		08/15/18	2.00	6,930.64	6,933.10	2.46	6,958.71	28.07	ND	NA	20.16	6,912.94	NA	15 - 25	Chinle/Alluvial Interface
		11/29/18	2.00	6,930.64	6,933.10	2.46	6,958.99	28.35	ND	NA	20.30	6,912.80	NA	15 - 25	Chinle/Alluvial Interface
		02/19/19	2.00	6,930.64	6,933.10	2.46	6,958.74	28.10	ND	NA	20.29	6,912.81	NA	15 - 25	Chinle/Alluvial Interface
		05/15/19	2.00	6,930.64	6,933.10	2.46	6,958.74	28.10	ND	NA	20.02	6,913.08	NA	15 - 25	Chinle/Alluvial Interface
		08/20/19	2.00	6,930.64	6,933.10	2.46	6,958.71	28.07	ND	NA	19.78	6,913.32	NA	15 - 25	Chinle/Alluvial Interface
		11/04/19	2.00	6,930.64	6,933.10	2.46	6,958.99	28.35	ND	NA	19.97	6,913.13	NA	15 - 25	Chinle/Alluvial Interface
10/03/16	OW-58	03/29/17	2.00	6,934.71	6,934.50	-0.21	6,982.26	47.55	ND	NA	26.00	6,908.50	NA	38 - 48	Chinle/Alluvial Interface
		06/21/17	2.00	6,934.71	6,934.50	-0.21	6,982.26	47.55	ND	NA	25.14	6,909.36	NA	38 - 48	Chinle/Alluvial Interface
		09/19/17	2.00	6,934.71	6,934.50	-0.21	6,982.26	47.55	ND	NA	25.04	6,909.46	NA	38 - 48	Chinle/Alluvial Interface
		12/06/17	2.00	6,934.71	6,934.50	-0.21	6,982.21	47.50	ND	NA	24.67	6,909.83	NA	38 - 48	Chinle/Alluvial Interface
		02/20/18	2.00	6,934.71	6,934.50	-0.21	6,982.33	47.62	ND	NA	24.52	6,909.98	NA	38 - 48	Chinle/Alluvial Interface
		04/25/18	2.00	6,934.71	6,934.50	-0.21	6,982.21	47.50	ND	NA	24.25	6,910.25	NA	38 - 48	Chinle/Alluvial Interface
		08/16/18	2.00	6,934.71	6,934.50	-0.21	6,982.20	47.49	ND	NA	24.48	6,910.02	NA	38 - 48	Chinle/Alluvial Interface
		11/29/18	2.00	6,934.71	6,934.50	-0.21	6,982.21	47.50	ND	NA	24.27	6,910.23	NA	38 - 48	Chinle/Alluvial Interface
		03/28/19	2.00	6,934.71	6,934.50	-0.21	6,982.01	47.30	ND	NA	24.28	6,910.22	NA	38 - 48	Chinle/Alluvial Interface
		06/05/19	2.00	6,934.71	6,934.50	-0.21	6,982.01	47.30	ND	NA	24.09	6,910.41	NA	38 - 48	Chinle/Alluvial Interface
		08/20/19	2.00	6,934.71	6,934.50	-0.21	6,982.20	47.49	ND	NA	24.00	6,910.50	NA	38 - 48	Chinle/Alluvial Interface
		11/18/19	2.00	6,934.71	6,934.50	-0.21	6,982.21	47.50	ND	NA	23.99	6,910.51	NA	38 - 48	Chinle/Alluvial Interface
10/17/19	OW-58A	10/17/19	4.00	6,932.98	6,935.88	2.90	6,968.98	36.00	ND	NA	28.00	6,907.88	NA	13 - 33	Chinle/Alluvial Interface

TABLE 9.1
5-YEAR HISTORICAL DTB/DTW MEASUREMENTS - NON MKTF WELLS

Date of Installation	Well ID Number	Inspection or Sample Date	Casing Diameter (Inch)	Ground Level Elevation (ft)	Well Casing Rim Elevation (ft)	Stick-up length (ft)	Well Casing Bottom Elevation (ft)	Total Well Depth (ft)	Depth to SPH (ft)	SPH Column Thickness (ft)	Depth to Water (ft)	Ground water Elevation (ft)	Corrected Water Table [1] Elevation (ft)	Screened Interval Depth Top to Bottom (ft)	Stratigraphic unit in which screen exists
06/29/17	OW-59	09/21/17	2.00	6,887.63	6,889.73	2.10	6,925.93	38.30	ND	NA	24.30	6,865.43	NA	20 - 35	Chinle/Alluvial Interface
		12/05/17	2.00	6,887.63	6,889.73	2.10	6,926.13	38.50	ND	NA	24.30	6,865.43	NA	20 - 35	Chinle/Alluvial Interface
		02/21/18	2.00	6,887.63	6,889.73	2.10	6,926.18	38.55	ND	NA	24.00	6,865.73	NA	20 - 35	Chinle/Alluvial Interface
		04/26/18	2.00	6,887.63	6,889.73	2.10	6,926.11	38.48	ND	NA	24.05	6,865.68	NA	20 - 35	Chinle/Alluvial Interface
		08/14/18	2.00	6,887.63	6,889.73	2.10	6,926.15	38.52	ND	NA	24.13	6,865.60	NA	20 - 35	Chinle/Alluvial Interface
		11/06/18	2.00	6,887.63	6,889.73	2.10	6,926.13	38.50	ND	NA	23.90	6,865.83	NA	20 - 35	Chinle/Alluvial Interface
		02/13/19	2.00	6,886.40	6,888.66	2.26	6,924.70	38.30	ND	NA	23.90	6,864.76	NA	20 - 35	Chinle/Alluvial Interface
		05/02/19	2.00	6,886.40	6,888.66	2.26	6,924.70	38.30	ND	NA	23.80	6,864.86	NA	20 - 35	Chinle/Alluvial Interface
		08/21/19	2.00	6,886.40	6,888.66	2.26	6,924.92	38.52	ND	NA	24.02	6,864.64	NA	20 - 35	Chinle/Alluvial Interface
		10/15/19	2.00	6,886.40	6,888.66	2.26	6,924.90	38.50	ND	NA	24.11	6,864.55	NA	20 - 35	Chinle/Alluvial Interface
06/29/17	OW-60	09/21/17	2.00	6,891.06	6,893.51	2.45	6,936.61	45.55	ND	NA	16.45	6,877.06	NA	25 - 45	Chinle/Alluvial Interface
		12/05/17	2.00	6,891.06	6,893.51	2.45	6,936.76	45.70	ND	NA	16.40	6,877.11	NA	25 - 45	Chinle/Alluvial Interface
		02/21/18	2.00	6,891.06	6,893.51	2.45	6,937.12	46.06	ND	NA	16.26	6,877.25	NA	25 - 45	Chinle/Alluvial Interface
		04/26/18	2.00	6,891.06	6,893.51	2.45	6,937.21	46.15	ND	NA	16.52	6,876.99	NA	25 - 45	Chinle/Alluvial Interface
		08/14/18	2.00	6,891.06	6,893.51	2.45	6,937.48	46.42	ND	NA	16.52	6,876.99	NA	25 - 45	Chinle/Alluvial Interface
		11/06/18	2.00	6,891.06	6,893.51	2.45	6,936.76	45.70	ND	NA	16.25	6,877.26	NA	25 - 45	Chinle/Alluvial Interface
		02/13/19	2.00	6,889.93	6,892.50	2.57	6,935.43	45.50	ND	NA	16.43	6,876.07	NA	25 - 45	Chinle/Alluvial Interface
		05/02/19	2.00	6,889.93	6,892.50	2.57	6,935.43	45.50	ND	NA	16.55	6,875.95	NA	25 - 45	Chinle/Alluvial Interface
		08/21/19	2.00	6,889.93	6,892.50	2.57	6,936.35	46.42	ND	NA	16.53	6,875.97	NA	25 - 45	Chinle/Alluvial Interface
		10/15/19	2.00	6,889.93	6,892.50	2.57	6,935.63	45.70	ND	NA	16.41	6,876.09	NA	25 - 45	Chinle/Alluvial Interface
03/14/18	OW-61	03/21/18	4.00	6,960.91	6,963.57	2.66	6,992.59	31.68	16.71	0.09	16.80	6,946.77	6,946.84	8 - 28	Chinle/Alluvial Interface
		04/24/18	4.00	6,960.91	6,963.57	2.66	6,992.58	31.67	17.22	0.82	18.04	6,945.53	6,946.19	8 - 28	Chinle/Alluvial Interface
		08/16/18	4.00	6,960.91	6,963.57	2.66	6,992.61	31.70	17.40	4.70	22.10	6,941.47	6,945.23	8 - 28	Chinle/Alluvial Interface
		11/29/18	4.00	6,960.91	6,963.57	2.66	6,992.91	32.00	17.95	4.05	22.00	6,941.57	6,944.81	8 - 28	Chinle/Alluvial Interface
		02/19/19	4.00	6,959.29	6,961.88	2.59	6,991.29	32.00	18.00	4.09	22.09	6,939.79	6943.06	8 - 28	Chinle/Alluvial Interface
		05/15/19	4.00	6,959.29	6,961.88	2.59	6,991.29	32.00	17.62	3.51	21.13	6,940.75	6943.56	8 - 28	Chinle/Alluvial Interface
		08/20/19	4.00	6,959.29	6,961.88	2.59	6,990.99	31.70	17.42	2.73	20.15	6,941.73	6943.91	8 - 28	Chinle/Alluvial Interface
		11/04/19	4.00	6,959.29	6,961.88	2.59	6,991.29	32.00	17.54	3.09	20.63	6,941.25	6943.722	8 - 28	Chinle/Alluvial Interface

TABLE 9.1
5-YEAR HISTORICAL DTB/DTW MEASUREMENTS - NON MKTF WELLS

Date of Installation	Well ID Number	Inspection or Sample Date	Casing Diameter (Inch)	Ground Level Elevation (ft)	Well Casing Rim Elevation (ft)	Stick-up length (ft)	Well Casing Bottom Elevation (ft)	Total Well Depth (ft)	Depth to SPH (ft)	SPH Column Thickness (ft)	Depth to Water (ft)	Ground water Elevation (ft)	Corrected Water Table [1] Elevation (ft)	Screened Interval Depth Top to Bottom (ft)	Stratigraphic unit in which screen exists
03/15/18	OW-62	03/21/18	4.00	6,934.73	6,937.36	2.63	6,966.30	31.57	ND	NA	22.93	6,914.43	NA	8 - 28	Chinle/Alluvial Interface
		04/24/18	4.00	6,934.73	6,937.36	2.63	6,966.31	31.58	ND	NA	23.14	6,914.22	NA	8 - 28	Chinle/Alluvial Interface
		08/15/18	4.00	6,934.73	6,937.36	2.63	6,966.32	31.59	ND	NA	23.70	6,913.66	NA	8 - 28	Chinle/Alluvial Interface
		11/29/18	4.00	6,934.73	6,937.36	2.63	6,966.32	31.59	ND	NA	23.99	6,913.37	NA	8 - 28	Chinle/Alluvial Interface
		02/19/19	4.00	6,933.21	6,936.09	2.88	6,964.68	31.47	23.75	1.20	24.95	6,911.14	6912.10	8 - 28	Chinle/Alluvial Interface
		05/15/19	4.00	6,933.21	6,936.09	2.88	6,964.68	31.47	23.40	0.60	24.00	6,912.09	6912.57	8 - 28	Chinle/Alluvial Interface
		08/20/19	4.00	6,933.21	6,936.09	2.88	6,964.68	31.47	23.86	0.43	24.29	6,911.80	6912.14	8 - 28	Chinle/Alluvial Interface
		11/18/19	4.00	6,933.21	6,936.09	2.88	6,964.68	31.47	23.72	0.62	24.34	6,911.75	6912.25	8 - 28	Chinle/Alluvial Interface
03/14/18	OW-63	03/21/18	4.00	6,932.34	6,935.06	2.72	6,964.52	32.18	ND	NA	20.19	6,914.87	NA	9 - 29	Chinle/Alluvial Interface
		04/24/18	4.00	6,932.34	6,935.06	2.72	6,964.52	32.18	ND	NA	20.33	6,914.73	NA	9 - 29	Chinle/Alluvial Interface
		08/16/18	4.00	6,932.34	6,935.06	2.72	6,964.54	32.20	ND	NA	20.60	6,914.46	NA	9 - 29	Chinle/Alluvial Interface
		11/29/18	4.00	6,932.34	6,935.06	2.72	6,964.34	32.00	ND	NA	20.95	6,914.11	NA	9 - 29	Chinle/Alluvial Interface
		02/19/19	4.00	6,930.87	6,933.87	3.00	6,962.87	32.00	ND	NA	20.74	6,913.13	NA	9 - 29	Chinle/Alluvial Interface
		05/15/19	4.00	6,930.87	6,933.87	3.00	6,962.87	32.00	ND	NA	20.35	6,913.52	NA	9 - 29	Chinle/Alluvial Interface
		08/19/19	4.00	6,930.87	6,933.87	3.00	6,963.07	32.20	ND	NA	20.12	6,913.75	NA	9 - 29	Chinle/Alluvial Interface
		11/18/19	4.00	6,930.87	6,933.87	3.00	6,962.87	32.00	ND	NA	20.30	6,913.57	NA	9 - 29	Chinle/Alluvial Interface
03/16/18	OW-64	03/21/18	4.00	6,945.07	6,947.40	2.33	6,972.69	27.62	ND	NA	7.72	6,939.68	NA	4 - 24	Chinle/Alluvial Interface
		04/24/18	4.00	6,945.07	6,947.40	2.33	6,972.70	27.63	ND	NA	7.85	6,939.55	NA	4 - 24	Chinle/Alluvial Interface
		08/16/18	4.00	6,945.07	6,947.40	2.33	6,972.42	27.35	ND	NA	7.51	6,939.89	NA	4 - 24	Chinle/Alluvial Interface
		11/29/18	4.00	6,945.07	6,947.40	2.33	6,972.42	27.35	8.06	0.05	8.11	6,939.29	6,939.33	4 - 24	Chinle/Alluvial Interface
		02/19/19	4.00	6,943.32	6,946.09	2.77	6,970.95	27.63	7.00	0.02	7.02	6,939.07	6939.09	4 - 24	Chinle/Alluvial Interface
		05/15/19	4.00	6,943.32	6,946.09	2.77	6,970.95	27.63	ND	NA	6.83	6,939.26	NA	4 - 24	Chinle/Alluvial Interface
		08/19/19	4.00	6,943.32	6,946.09	2.77	6,970.67	27.35	ND	NA	7.10	6,938.99	NA	4 - 24	Chinle/Alluvial Interface
		11/18/19	4.00	6,943.32	6,946.09	2.77	6,970.67	27.35	ND	NA	8.40	6,937.69	NA	4 - 24	Chinle/Alluvial Interface
03/12/18	OW-65	03/21/18	4.00	6,951.62	6,954.05	2.43	6,993.28	41.66	23.40	0.20	23.60	6,930.45	6,930.61	17 - 37	Chinle/Alluvial Interface
		04/24/18	4.00	6,951.62	6,954.05	2.43	6,993.27	41.65	23.61	2.74	26.35	6,927.70	6,929.89	17 - 37	Chinle/Alluvial Interface
		08/16/18	4.00	6,951.62	6,954.05	2.43	6,993.28	41.66	24.96	1.68	26.64	6,927.41	6,928.75	17 - 37	Chinle/Alluvial Interface
		11/29/18	4.00	6,951.62	6,954.05	2.43	6,991.62	40.00	24.05	7.75	31.80	6,922.25	6,928.45	17 - 37	Chinle/Alluvial Interface
		02/19/19	4.00	6,949.95	6,952.83	2.88	6,989.95	40.00	22.24	9.27	31.51	6,921.32	6928.74	17 - 37	Chinle/Alluvial Interface
		05/15/19	4.00	6,949.95	6,952.83	2.88	6,989.95	40.00	23.47	8.74	32.21	6,920.62	6927.61	17 - 37	Chinle/Alluvial Interface
		08/20/19	4.00	6,949.95	6,952.83	2.88	6,991.61	41.66	21.97	9.18	31.15	6,921.68	6929.02	17 - 37	Chinle/Alluvial Interface
		11/04/19	4.00	6,949.95	6,952.83	2.88	6,989.95	40.00	22.30	8.55	30.85	6,921.98	6928.82	17 - 37	Chinle/Alluvial Interface

TABLE 9.1
5-YEAR HISTORICAL DTB/DTW MEASUREMENTS - NON MKTF WELLS

Date of Installation	Well ID Number	Inspection or Sample Date	Casing Diameter (Inch)	Ground Level Elevation (ft)	Well Casing Rim Elevation (ft)	Stick-up length (ft)	Well Casing Bottom Elevation (ft)	Total Well Depth (ft)	Depth to SPH (ft)	SPH Column Thickness (ft)	Depth to Water (ft)	Ground water Elevation (ft)	Corrected Water Table [1] Elevation (ft)	Screened Interval Depth Top to Bottom (ft)	Stratigraphic unit in which screen exists
03/28/95	RW-1	03/23/15	4.00	6,942.86	6,946.06	3.20	6,903.02	43.04	28.10	4.70	32.80	6,913.26	6,917.02	25 - 40	Chinle/Alluvial Interface
		06/09/15	4.00	6,942.86	6,946.06	3.20	6,903.02	43.04	27.70	4.40	32.10	6,913.96	6,917.48	25 - 40	Chinle/Alluvial Interface
		08/23/15	4.00	6,942.86	6,946.06	3.20	6,903.02	43.04	28.08	1.94	30.02	6,916.04	6,917.59	25 - 40	Chinle/Alluvial Interface
		10/29/15	4.00	6,942.86	6,946.06	3.20	6,903.02	43.04	27.65	2.45	30.10	6,915.96	6,917.92	25 - 40	Chinle/Alluvial Interface
		03/04/16	4.00	6,942.86	6,946.06	3.20	6,903.02	43.04	28.05	2.50	30.55	6,915.51	6,917.51	25 - 40	Chinle/Alluvial Interface
		06/08/16	4.00	6,942.86	6,946.06	3.20	6,903.02	43.04	27.98	3.82	31.80	6,914.26	6,917.32	25 - 40	Chinle/Alluvial Interface
		09/13/16	4.00	6,942.86	6,946.06	3.20	6,903.02	43.04	27.90	4.14	32.04	6,914.02	6,917.33	25 - 40	Chinle/Alluvial Interface
		11/16/16	4.00	6,942.86	6,946.06	3.20	6,903.02	43.04	27.80	3.10	30.90	6,915.16	6,917.64	25 - 40	Chinle/Alluvial Interface
		03/16/17	4.00	6,942.86	6,946.06	3.20	6,903.02	43.04	27.05	3.50	30.55	6,915.51	6,918.31	25 - 40	Chinle/Alluvial Interface
		06/20/17	4.00	6,942.86	6,946.06	3.20	6,903.02	43.04	26.77	1.65	28.42	6,917.64	6,918.96	25 - 40	Chinle/Alluvial Interface
		09/19/17	4.00	6,942.86	6,946.06	3.20	6,903.02	43.04	26.52	1.08	27.60	6,918.46	6,919.32	25 - 40	Chinle/Alluvial Interface
		12/12/17	4.00	6,942.86	6,946.06	3.20	6,903.02	43.04	26.50	1.00	27.50	6,918.56	6,919.36	25 - 40	Chinle/Alluvial Interface
		02/13/18	4.00	6,942.86	6,946.06	3.20	6,903.02	43.04	26.94	0.28	27.22	6,918.84	6,919.06	25 - 40	Chinle/Alluvial Interface
		04/25/18	4.00	6,942.86	6,946.06	3.20	6,903.02	43.35	26.94	0.27	27.21	6,918.85	6,919.07	25 - 40	Chinle/Alluvial Interface
		08/16/18	4.00	6,942.86	6,946.06	3.20	6,903.02	43.45	27.44	0.26	27.70	6,918.36	6,918.57	25 - 40	Chinle/Alluvial Interface
		11/07/18	4.00	6,942.86	6,946.06	3.20	6,903.02	NM	NM	NA	NM	NA	NA	25 - 40	Chinle/Alluvial Interface
		03/28/19	4.00	6,942.86	6,946.06	3.20	6,903.02	NM	NM	NA	NA	NA	NA	25 - 40	Chinle/Alluvial Interface
		05/08/19	4.00	6,942.86	6,946.06	3.20	6,903.02	NM	NM	NA	NA	NA	NA	25 - 40	Chinle/Alluvial Interface
		08/16/19	4.00	6,942.86	6,946.06	3.20	6,903.02	NM	NM	NA	NA	NA	NA	25 - 40	Chinle/Alluvial Interface
		11/01/19	4.00	6,942.86	6,946.06	3.20	6,903.02	NM	NM	NA	NM	NA	NA	25 - 40	Chinle/Alluvial Interface

TABLE 9.1
5-YEAR HISTORICAL DTB/DTW MEASUREMENTS - NON MKTF WELLS

Date of Installation	Well ID Number	Inspection or Sample Date	Casing Diameter (Inch)	Ground Level Elevation (ft)	Well Casing Rim Elevation (ft)	Stick-up length (ft)	Well Casing Bottom Elevation (ft)	Total Well Depth (ft)	Depth to SPH (ft)	SPH Column Thickness (ft)	Depth to Water (ft)	Ground water Elevation (ft)	Corrected Water Table [1] Elevation (ft)	Screened Interval Depth Top to Bottom (ft)	Stratigraphic unit in which screen exists
03/29/95	RW-2	03/23/15	4.00	6,926.40	6,928.53	2.13	6,888.73	39.80	ND	NA	23.52	6,905.01	NA	26.1 - 36.1	Chinle/Alluvial Interface
		06/09/15	4.00	6,926.40	6,928.53	2.13	6,888.73	39.80	ND	NA	23.02	6,905.51	NA	26.1 - 36.1	Chinle/Alluvial Interface
		08/23/15	4.00	6,926.40	6,928.53	2.13	6,888.73	39.80	ND	NA	23.37	6,905.16	NA	26.1 - 36.1	Chinle/Alluvial Interface
		10/29/15	4.00	6,926.40	6,928.53	2.13	6,888.73	39.80	ND	NA	22.80	6,905.73	NA	26.1 - 36.1	Chinle/Alluvial Interface
		03/04/16	4.00	6,926.40	6,928.53	2.13	6,888.73	39.80	ND	NA	22.45	6,906.08	NA	26.1 - 36.1	Chinle/Alluvial Interface
		06/08/16	4.00	6,926.40	6,928.53	2.13	6,888.73	39.80	ND	NA	22.31	6,906.22	NA	26.1 - 36.1	Chinle/Alluvial Interface
		09/13/16	4.00	6,926.40	6,928.53	2.13	6,888.73	39.80	ND	NA	22.47	6,906.06	NA	26.1 - 36.1	Chinle/Alluvial Interface
		11/16/16	4.00	6,926.40	6,928.53	2.13	6,888.73	39.80	ND	NA	22.22	6,906.31	NA	26.1 - 36.1	Chinle/Alluvial Interface
		03/16/17	4.00	6,926.40	6,928.53	2.13	6,888.73	39.80	ND	NA	21.65	6,906.88	NA	26.1 - 36.1	Chinle/Alluvial Interface
		06/20/17	4.00	6,926.40	6,928.53	2.13	6,888.73	39.80	ND	NA	21.19	6,907.34	NA	26.1 - 36.1	Chinle/Alluvial Interface
		09/19/17	4.00	6,926.40	6,928.53	2.13	6,888.73	39.80	ND	NA	20.71	6,907.82	NA	26.1 - 36.1	Chinle/Alluvial Interface
		12/05/17	4.00	6,926.40	6,928.53	2.13	6,888.73	40.00	ND	NA	20.34	6,908.19	NA	26.1 - 36.1	Chinle/Alluvial Interface
		02/19/18	4.00	6,926.40	6,928.53	2.13	6,888.73	40.00	ND	NA	20.00	6,908.53	NA	26.1 - 36.1	Chinle/Alluvial Interface
		04/25/18	4.00	6,926.40	6,928.53	2.13	6,888.73	39.99	ND	NA	20.03	6,908.50	NA	26.1 - 36.1	Chinle/Alluvial Interface
		08/16/18	4.00	6,926.40	6,928.53	2.13	6,888.73	40.00	ND	NA	20.10	6,908.43	NA	26.1 - 36.1	Chinle/Alluvial Interface
		11/07/18	4.00	6,926.40	6,928.53	2.13	6,888.73	NM	NM	NA	NM	NA	NA	26.1 - 36.1	Chinle/Alluvial Interface
		03/28/19	4.00	6,926.40	6,928.53	2.13	6,888.73	NM	NM	NA	NM	NA	NA	26.1 - 36.1	Chinle/Alluvial Interface
		05/08/19	4.00	6,926.40	6,928.53	2.13	6,888.73	NM	NM	NA	NM	NA	NA	26.1 - 36.1	Chinle/Alluvial Interface
		08/16/19	4.00	6,926.40	6,928.53	2.13	6,888.73	NM	NM	NA	NM	NA	NA	26.1 - 36.1	Chinle/Alluvial Interface
		11/01/19	4.00	6,926.40	6,928.53	2.13	6,888.73	NM	NM	NA	NM	NA	NA	26.1 - 36.1	Chinle/Alluvial Interface

TABLE 9.1
5-YEAR HISTORICAL DTB/DTW MEASUREMENTS - NON MKTF WELLS

Date of Installation	Well ID Number	Inspection or Sample Date	Casing Diameter (Inch)	Ground Level Elevation (ft)	Well Casing Rim Elevation (ft)	Stick-up length (ft)	Well Casing Bottom Elevation (ft)	Total Well Depth (ft)	Depth to SPH (ft)	SPH Column Thickness (ft)	Depth to Water (ft)	Ground water Elevation (ft)	Corrected Water Table [1] Elevation (ft)	Screened Interval Depth Top to Bottom (ft)	Stratigraphic unit in which screen exists
08/27/97	RW-5	03/23/15	4.00	6,941.53	6,943.57	2.04	6,903.98	39.59	ND	NA	29.10	6,914.47	NA	29.5 - 39.5	Chinle/Alluvial Interface
		06/09/15	4.00	6,941.53	6,943.57	2.04	6,903.98	39.59	ND	NA	28.80	6,914.77	NA	29.5 - 39.5	Chinle/Alluvial Interface
		08/23/15	4.00	6,941.53	6,943.57	2.04	6,903.98	39.59	ND	NA	29.08	6,914.49	NA	29.5 - 39.5	Chinle/Alluvial Interface
		10/29/15	4.00	6,941.53	6,943.57	2.04	6,903.98	39.59	ND	NA	27.97	6,915.60	NA	29.5 - 39.5	Chinle/Alluvial Interface
		03/04/16	4.00	6,941.53	6,943.57	2.04	6,903.98	39.59	ND	NA	28.22	6,915.35	NA	29.5 - 39.5	Chinle/Alluvial Interface
		06/07/16	4.00	6,941.53	6,943.57	2.04	6,903.98	39.59	ND	NA	28.22	6,915.35	NA	29.5 - 39.5	Chinle/Alluvial Interface
		09/13/16	4.00	6,941.53	6,943.57	2.04	6,903.98	39.59	ND	NA	27.70	6,915.87	NA	29.5 - 39.5	Chinle/Alluvial Interface
		11/16/16	4.00	6,941.53	6,943.57	2.04	6,903.98	39.59	ND	NA	27.40	6,916.17	NA	29.5 - 39.5	Chinle/Alluvial Interface
		03/16/17	4.00	6,941.53	6,943.57	2.04	6,903.98	39.59	ND	NA	27.53	6,916.04	NA	29.5 - 39.5	Chinle/Alluvial Interface
		06/20/17	4.00	6,941.53	6,943.57	2.04	6,903.98	39.59	25.30	8.00	33.30	6,910.27	6,916.67	29.5 - 39.5	Chinle/Alluvial Interface
		09/19/17	4.00	6,941.53	6,943.57	2.04	6,903.98	39.59	25.46	6.19	31.65	6,911.92	6,916.87	29.5 - 39.5	Chinle/Alluvial Interface
		12/12/17	4.00	6,941.53	6,943.57	2.04	6,903.98	39.59	24.75	9.25	34.00	6,909.57	6,916.97	29.5 - 39.5	Chinle/Alluvial Interface
		02/09/18	4.00	6,941.53	6,943.57	2.04	6,903.98	39.59	25.50	8.10	33.60	6,909.97	6,916.45	29.5 - 39.5	Chinle/Alluvial Interface
		04/25/18	4.00	6,941.53	6,943.57	2.04	6,903.98	39.59	26.62	5.72	32.34	6,911.23	6,915.81	29.5 - 39.5	Chinle/Alluvial Interface
		08/16/18	4.00	6,941.53	6,943.57	2.04	6,903.98	39.51	27.20	5.38	32.58	6,910.99	6,915.29	29.5 - 39.5	Chinle/Alluvial Interface
		11/07/18	4.00	6,941.53	6,943.57	2.04	6,903.98	NM	NM	NA	NM	NA	NA	29.5 - 39.5	Chinle/Alluvial Interface
		03/28/19	4.00	6,941.53	6,943.57	2.04	6,903.98	NM	NM	NA	NM	NA	NA	29.5 - 39.5	Chinle/Alluvial Interface
		05/08/19	4.00	6,941.53	6,943.57	2.04	6,903.98	NM	NM	NA	NM	NA	NA	29.5 - 39.5	Chinle/Alluvial Interface
		08/16/19	4.00	6,941.53	6,943.57	2.04	6,903.98	NM	NM	NA	NM	NA	NA	29.5 - 39.5	Chinle/Alluvial Interface
		11/01/19	4.00	6,941.53	6,943.57	2.04	6,903.98	NM	NM	NA	NM	NA	NA	29.5 - 39.5	Chinle/Alluvial Interface

TABLE 9.1
5-YEAR HISTORICAL DTB/DTW MEASUREMENTS - NON MKTF WELLS

Date of Installation	Well ID Number	Inspection or Sample Date	Casing Diameter (Inch)	Ground Level Elevation (ft)	Well Casing Rim Elevation (ft)	Stick-up length (ft)	Well Casing Bottom Elevation (ft)	Total Well Depth (ft)	Depth to SPH (ft)	SPH Column Thickness (ft)	Depth to Water (ft)	Ground water Elevation (ft)	Corrected Water Table [1] Elevation (ft)	Screened Interval Depth Top to Bottom (ft)	Stratigraphic unit in which screen exists
08/27/97	RW-6	03/23/15	4.00	6,941.96	6,944.01	2.05	6,903.11	40.90	ND	NA	29.18	6,914.83	NA	28.5 - 38.5	Chinle/Alluvial Interface
		06/09/15	4.00	6,941.96	6,944.01	2.05	6,903.11	40.90	ND	NA	28.68	6,915.33	NA	28.5 - 38.5	Chinle/Alluvial Interface
		08/23/15	4.00	6,941.96	6,944.01	2.05	6,903.11	40.90	ND	NA	29.06	6,914.95	NA	28.5 - 38.5	Chinle/Alluvial Interface
		10/29/15	4.00	6,941.96	6,944.01	2.05	6,903.11	40.90	ND	NA	27.97	6,916.04	NA	28.5 - 38.5	Chinle/Alluvial Interface
		03/04/16	4.00	6,941.96	6,944.01	2.05	6,903.11	40.90	ND	NA	28.25	6,915.76	NA	28.5 - 38.5	Chinle/Alluvial Interface
		06/07/16	4.00	6,941.96	6,944.01	2.05	6,903.11	40.90	ND	NA	28.24	6,915.77	NA	28.5 - 38.5	Chinle/Alluvial Interface
		09/13/16	4.00	6,941.96	6,944.01	2.05	6,903.11	40.90	ND	NA	27.99	6,916.02	NA	28.5 - 38.5	Chinle/Alluvial Interface
		11/16/16	4.00	6,941.96	6,944.01	2.05	6,903.11	40.90	ND	NA	27.72	6,916.29	NA	28.5 - 38.5	Chinle/Alluvial Interface
		03/16/17	4.00	6,941.96	6,944.01	2.05	6,903.11	40.90	ND	NA	27.57	6,916.44	NA	28.5 - 38.5	Chinle/Alluvial Interface
		06/20/17	4.00	6,941.96	6,944.01	2.05	6,903.11	40.90	25.50	8.12	33.62	6,910.39	6,916.89	28.5 - 38.5	Chinle/Alluvial Interface
		09/19/17	4.00	6,941.96	6,944.01	2.05	6,903.11	40.90	25.89	5.08	30.97	6,913.04	6,917.10	28.5 - 38.5	Chinle/Alluvial Interface
		12/12/17	4.00	6,941.96	6,944.01	2.05	6,903.11	40.90	24.83	9.02	33.85	6,910.16	6,917.38	28.5 - 38.5	Chinle/Alluvial Interface
		02/09/18	4.00	6,941.96	6,944.01	2.05	6,903.11	40.90	25.65	7.40	33.05	6,910.96	6,916.88	28.5 - 38.5	Chinle/Alluvial Interface
		04/25/18	4.00	6,941.96	6,944.01	2.05	6,903.11	40.83	26.93	4.76	31.69	6,912.32	6,916.13	28.5 - 38.5	Chinle/Alluvial Interface
		08/16/18	4.00	6,941.96	6,944.01	2.05	6,903.11	40.85	27.43	4.35	31.78	6,912.23	6,915.71	28.5 - 38.5	Chinle/Alluvial Interface
		11/07/18	4.00	6,941.96	6,944.01	2.05	6,903.11	NM	NM	NA	NM	NA	NA	28.5 - 38.5	Chinle/Alluvial Interface
		03/28/19	4.00	6,941.96	6,944.01	2.05	6,903.11	NM	NM	NA	NM	NA	NA	28.5 - 38.5	Chinle/Alluvial Interface
		05/08/19	4.00	6,941.96	6,944.01	2.05	6,903.11	NM	NM	NA	NM	NA	NA	28.5 - 38.5	Chinle/Alluvial Interface
		08/16/19	4.00	6,941.96	6,944.01	2.05	6,903.11	NM	NM	NA	NM	NA	NA	28.5 - 38.5	Chinle/Alluvial Interface
		11/01/19	4.00	6,941.96	6,944.01	2.05	6,903.11	NM	NM	NA	NM	NA	NA	28.5 - 38.5	Chinle/Alluvial Interface
09/26/85	SMW-2	08/10/15	2.00	6,881.63	6,883.97	2.34	6,831.17	52.80	ND	NA	24.88	6,859.09	NA	34.31 - 54.31	Chinle/Alluvial Interface and Upper Sand Well
		09/09/16	2.00	6,881.63	6,883.97	2.34	6,831.17	52.80	ND	NA	24.84	6,859.13	NA	34.31 - 54.31	Chinle/Alluvial Interface and Upper Sand Well
		09/11/17	2.00	6,881.63	6,883.97	2.34	6,831.17	52.80	ND	NA	24.79	6,859.18	NA	34.31 - 54.31	Chinle/Alluvial Interface and Upper Sand Well
		08/15/18	2.00	6,881.63	6,883.97	2.34	6,831.17	52.80	ND	NA	24.49	6,859.48	NA	34.31 - 54.31	Chinle/Alluvial Interface and Upper Sand Well
		08/19/19	2.00	6,881.63	6,883.97	2.34	6,831.17	52.80	ND	NA	25.30	6,858.67	NA	34.31 - 54.31	Chinle/Alluvial Interface and Upper Sand Well

TABLE 9.1
5-YEAR HISTORICAL DTB/DTW MEASUREMENTS - NON MKTF WELLS

Date of Installation	Well ID Number	Inspection or Sample Date	Casing Diameter (Inch)	Ground Level Elevation (ft)	Well Casing Rim Elevation (ft)	Stick-up length (ft)	Well Casing Bottom Elevation (ft)	Total Well Depth (ft)	Depth to SPH (ft)	SPH Column Thickness (ft)	Depth to Water (ft)	Ground water Elevation (ft)	Corrected Water Table [1] Elevation (ft)	Screened Interval Depth Top to Bottom (ft)	Stratigraphic unit in which screen exists
09/25/85	SMW-4	08/10/15	2.00	6,877.63	6,879.52	1.89	6,809.84	69.68	ND	NA	29.32	6,850.20	NA	51.7 - 71.7	Chinle/Alluvial Interface
		09/06/16	2.00	6,877.63	6,879.52	1.89	6,809.84	69.68	ND	NA	29.00	6,850.52	NA	51.7 - 71.7	Chinle/Alluvial Interface
		09/11/17	2.00	6,877.63	6,879.52	1.89	6,809.84	69.68	ND	NA	29.33	6,850.19	NA	51.7 - 71.7	Chinle/Alluvial Interface
		08/15/18	2.00	6,877.63	6,879.52	1.89	6,809.84	69.68	ND	NA	29.04	6,850.48	NA	51.7 - 71.7	Chinle/Alluvial Interface
		12/06/18	2.00	6,877.63	6,879.52	1.89	6,809.84	69.68	ND	NA	29.25	6,850.27	NA	51.7 - 71.7	Chinle/Alluvial Interface
		08/13/19	2.00	6,877.63	6,879.52	1.89	6,809.84	69.68	ND	NA	29.10	6,850.42	NA	51.7 - 71.7	Chinle/Alluvial Interface
05/06/14	STP1-NW	03/10/15	2.00	6,904.50	6,904.47	-0.03	6,854.47	50.00	ND	NA	20.74	6,883.73	NA	20 - 50	Chinle/Alluvial Interface
		06/02/15	2.00	6,904.50	6,904.47	-0.03	6,854.47	50.00	ND	NA	20.72	6,883.75	NA	20 - 50	Chinle/Alluvial Interface
		08/11/15	2.00	6,904.50	6,904.47	-0.03	6,854.47	50.00	ND	NA	20.79	6,883.68	NA	20 - 50	Chinle/Alluvial Interface
		10/29/15	2.00	6,904.50	6,904.47	-0.03	6,854.47	50.00	ND	NA	20.60	6,883.87	NA	20 - 50	Chinle/Alluvial Interface
		03/01/16	2.00	6,904.50	6,904.47	-0.03	6,854.47	50.00	ND	NA	20.55	6,883.92	NA	20 - 50	Chinle/Alluvial Interface
		06/07/16	2.00	6,904.50	6,904.47	-0.03	6,854.47	50.00	ND	NA	20.89	6,883.58	NA	20 - 50	Chinle/Alluvial Interface
		09/09/16	2.00	6,904.50	6,904.47	-0.03	6,854.47	50.00	ND	NA	21.20	6,883.27	NA	20 - 50	Chinle/Alluvial Interface
		11/14/16	2.00	6,904.50	6,904.47	-0.03	6,854.47	50.00	ND	NA	21.02	6,883.45	NA	20 - 50	Chinle/Alluvial Interface
		02/21/17	2.00	6,904.50	6,904.47	-0.03	6,854.47	50.00	ND	NA	20.47	6,884.00	NA	20 - 50	Chinle/Alluvial Interface
		06/02/17	2.00	6,904.50	6,904.47	-0.03	6,854.47	50.00	ND	NA	20.66	6,883.81	NA	20 - 50	Chinle/Alluvial Interface
		09/05/17	2.00	6,904.50	6,904.47	-0.03	6,854.47	50.00	ND	NA	20.81	6,883.66	NA	20 - 50	Chinle/Alluvial Interface
		12/04/17	2.00	6,904.50	6,904.47	-0.03	6,854.47	49.74	ND	NA	20.55	6,883.92	NA	20 - 50	Chinle/Alluvial Interface
		02/09/18	2.00	6,904.50	6,904.47	-0.03	6,854.47	49.73	ND	NA	20.55	6,883.92	NA	20 - 50	Chinle/Alluvial Interface
		04/26/18	2.00	6,904.50	6,904.47	-0.03	6,854.47	49.65	ND	NA	20.64	6,883.83	NA	20 - 50	Chinle/Alluvial Interface
		08/15/18	2.00	6,904.50	6,904.47	-0.03	6,854.47	49.78	ND	NA	20.92	6,883.55	NA	20 - 50	Chinle/Alluvial Interface
		11/19/18	2.00	6,904.50	6,904.47	-0.03	6,854.47	NM	NM	NA	NM	NA	NA	20 - 50	Chinle/Alluvial Interface
		02/13/19	2.00	6,904.50	6,904.47	-0.03	6,854.47	50.00	ND	NA	20.35	6,884.12	NA	20 - 50	Chinle/Alluvial Interface
		05/08/19	2.00	6,904.50	6,904.47	-0.03	6,854.47	50.00	ND	NA	19.54	6,884.93	NA	20 - 50	Chinle/Alluvial Interface
		08/21/19	2.00	6,904.50	6,904.47	-0.03	6,854.47	50.00	ND	NA	20.79	6,883.68	NA	20 - 50	Chinle/Alluvial Interface
		10/22/19	2.00	6,904.50	6,904.47	-0.03	6,854.47	50.00	ND	NA	20.76	6,883.71	NA	20 - 50	Chinle/Alluvial Interface

TABLE 9.1
5-YEAR HISTORICAL DTB/DTW MEASUREMENTS - NON MKTF WELLS

Date of Installation	Well ID Number	Inspection or Sample Date	Casing Diameter (Inch)	Ground Level Elevation (ft)	Well Casing Rim Elevation (ft)	Stick-up length (ft)	Well Casing Bottom Elevation (ft)	Total Well Depth (ft)	Depth to SPH (ft)	SPH Column Thickness (ft)	Depth to Water (ft)	Ground water Elevation (ft)	Corrected Water Table [1] Elevation (ft)	Screened Interval Depth Top to Bottom (ft)	Stratigraphic unit in which screen exists
05/06/14	STP1-SW	03/10/15	2.00	6,912.40	6,912.38	-0.02	6,880.38	29.10	ND	NA	DRY	DRY	NA	15 - 30	Chinle/Alluvial Interface
		06/02/15	2.00	6,912.40	6,912.38	-0.02	6,880.38	29.10	ND	NA	DRY	DRY	NA	15 - 30	Chinle/Alluvial Interface
		08/11/15	2.00	6,912.40	6,912.38	-0.02	6,880.38	29.10	ND	NA	DRY	DRY	NA	15 - 30	Chinle/Alluvial Interface
		10/29/15	2.00	6,912.40	6,912.38	-0.02	6,880.38	29.10	ND	NA	DRY	DRY	NA	15 - 30	Chinle/Alluvial Interface
		03/08/16	2.00	6,912.40	6,912.38	-0.02	6,880.38	29.10	ND	NA	DRY	DRY	NA	15 - 30	Chinle/Alluvial Interface
		06/07/16	2.00	6,912.40	6,912.38	-0.02	6,880.38	29.10	ND	NA	DRY	DRY	NA	15 - 30	Chinle/Alluvial Interface
		09/09/16	2.00	6,912.40	6,912.38	-0.02	6,880.38	29.10	ND	NA	DRY	DRY	NA	15 - 30	Chinle/Alluvial Interface
		11/14/16	2.00	6,912.40	6,912.38	-0.02	6,880.38	29.10	ND	NA	DRY	DRY	NA	15 - 30	Chinle/Alluvial Interface
		02/21/17	2.00	6,912.40	6,912.38	-0.02	6,880.38	29.10	NM	NA	NM	NA	NA	15 - 30	Chinle/Alluvial Interface
		06/02/17	2.00	6,912.40	6,912.38	-0.02	6,880.38	29.10	NM	NA	NM	NA	NA	15 - 30	Chinle/Alluvial Interface
		09/05/17	2.00	6,912.40	6,912.38	-0.02	6,880.38	29.10	NM	NA	NM	NA	NA	15 - 30	Chinle/Alluvial Interface
		12/04/17	2.00	6,912.40	6,912.38	-0.02	6,880.38	29.10	NM	NA	NM	NA	NA	15 - 30	Chinle/Alluvial Interface
		02/09/18	2.00	6,912.40	6,912.38	-0.02	6,854.47	NM	NM	NA	NM	NA	NA	15 - 30	Chinle/Alluvial Interface
		04/26/18	2.00	6,912.40	6,912.38	-0.02	6,854.47	NM	NM	NA	NM	NA	NA	15 - 30	Chinle/Alluvial Interface
		08/15/18	2.00	6,912.40	6,912.38	-0.02	6,854.47	NM	NM	NA	NM	NA	NA	15 - 30	Chinle/Alluvial Interface
		11/19/18	2.00	6,912.40	6,912.38	-0.02	6,854.47	NM	NM	NA	NM	NA	NA	15 - 30	Chinle/Alluvial Interface
		02/13/19	2.00	6,912.40	6,912.38	-0.02	6,854.47	NM	NM	NA	NM	NA	NA	15 - 30	Chinle/Alluvial Interface
		05/08/19	2.00	6,912.40	6,912.38	-0.02	6,854.47	NM	NM	NA	NM	NA	NA	15 - 30	Chinle/Alluvial Interface
		08/21/19	2.00	6,912.40	6,912.38	-0.02	6,854.47	NM	NM	NA	NM	NA	NA	15 - 30	Chinle/Alluvial Interface
		10/22/19	2.00	6,912.40	6,912.38	-0.02	6,854.47	NM	NM	NA	NM	NA	NA	15 - 30	Chinle/Alluvial Interface

DEFINITIONS:

DTB - Depth to Bottom
DTW - Depth to Water
SPH = Separate Phase Hydrocarbons
* Wells also checked for Artesian flow conditions.

NA = Not Applicable NS = Not Surveyed NM = Not Measured
Negative number in Stick up Length column indicates well is flushmount and located at or below ground level.
Depth to Water Column - if 0.00 is indicated - means water is at top of casing (full) under artesian flow conditions.
Dry indicates no water was detected.

NOTES:

1. Corrected Water Table Elevation applies only if SPH thickness column measurement exists. (0.8 X SPH thickness + Groundwater Elevation)

12/06/18	- 10-Year Post Closure Sampling Event for the LTU (Land Treatment Unit)
02/09/18	- Was not able to gauge or sample wells around the NAPIS Unit due to elevated H_2S readings in the ambient air.
11/07/18	- Did not gauge or sample wells due to recovery apparatus installed on all the RW wells.

TABLE 9.2
5-YEAR HISTORICAL DTB/DTW MEASUREMENTS FOR WELLS MKTF-01 THRU MKTF-50

Date of Installation	Well ID Number	Inspection or Sample Date	Casing Diameter (Inch)	Ground Level Elevation (ft)	Well Casing Rim Elevation (ft)	Stick-up length (ft)	Well Casing Bottom Elevation (ft)	Total Well Depth (ft)	Depth to SPH (ft)	SPH Column Thickness (ft)	Depth to Water (ft)	Ground-water Elevation (ft)	Corrected Water Table[1] Elevation (ft)	Screened Interval Depth Top to Bottom (ft)
11/14/13	MKTF-01	03/11/15	4.00	6,918.28	6,920.67	2.39	6,903.25	17.42	ND	NA	5.85	6,914.82	NA	5 - 15
		06/09/15	4.00	6,918.28	6,920.67	2.39	6,903.25	17.42	ND	NA	7.15	6,913.52	NA	5 - 15
		08/21/15	4.00	6,918.28	6,920.67	2.39	6,903.25	17.42	ND	NA	6.23	6,914.44	NA	5 - 15
		11/04/15	4.00	6,918.28	6,920.67	2.39	6,903.25	17.42	ND	NA	5.87	6,914.80	NA	5 - 15
		02/24/16	4.00	6,918.28	6,920.67	2.39	6,903.25	17.42	ND	NA	5.84	6,914.83	NA	5 - 15
		06/10/16	4.00	6,918.28	6,920.67	2.39	6,903.25	17.42	ND	NA	7.02	6,913.65	NA	5 - 15
		09/07/16	4.00	6,918.28	6,920.67	2.39	6,903.25	17.42	7.12	1.50	8.62	6,912.05	6,913.25	5 - 15
		11/04/16	4.00	6,918.28	6,920.67	2.39	6,903.25	17.42	ND	NA	5.87	6,914.80	NA	5 - 15
		03/14/17	4.00	6,918.28	6,920.67	2.39	6,903.25	17.42	4.65	0.16	4.81	6,915.86	6,915.99	5 - 15
		06/07/17	4.00	6,918.28	6,920.67	2.39	6,903.25	17.42	4.89	0.53	5.42	6,915.25	6,915.67	5 - 15
		10/03/17	4.00	6,918.28	6,920.67	2.39	6,903.25	17.42	6.20	0.36	6.56	6,914.11	6,914.40	5 - 15
		11/20/17	4.00	6,918.28	6,920.67	2.39	6,903.25	17.42	4.62	0.33	4.95	6,915.72	6,915.98	5 - 15
		02/07/18	4.00	6,918.28	6,920.67	2.39	6,903.25	17.42	5.05	0.35	5.40	6,915.27	6,915.55	5 - 15
		04/25/18	4.00	6,918.28	6,920.67	2.39	6,903.32	17.35	6.22	0.30	6.52	6,914.15	6,914.39	5 - 15
		08/15/18	4.00	6,918.28	6,920.67	2.39	6,903.40	17.27	6.40	0.31	6.71	6,913.96	6,914.21	5 - 15
		11/27/18	4.00	6,918.28	6,920.67	2.39	6,903.25	17.42	5.50	0.37	5.87	6,914.80	6,915.10	5 - 15
		02/19/19	4.00	6,918.28	6,920.67	2.39	6,903.25	17.42	4.40	0.34	4.74	6,915.93	6916.20	5 - 15
		05/06/19	4.00	6,918.28	6,920.67	2.39	6,903.25	17.42	4.39	0.35	4.74	6,915.93	6916.21	5 - 15
		08/30/19	4.00	6,918.28	6,920.67	2.39	6,903.25	17.42	4.58	0.37	4.95	6,915.72	6916.02	5 - 15
		11/19/19	4.00	6,918.28	6,920.67	2.39	6,903.25	17.42	5.14	0.31	5.45	6,915.22	6915.47	5 - 15

TABLE 9.2
5-YEAR HISTORICAL DTB/DTW MEASUREMENTS FOR WELLS MKTF-01 THRU MKTF-50

Date of Installation	Well ID Number	Inspection or Sample Date	Casing Diameter (Inch)	Ground Level Elevation (ft)	Well Casing Rim Elevation (ft)	Stick-up length (ft)	Well Casing Bottom Elevation (ft)	Total Well Depth (ft)	Depth to SPH (ft)	SPH Column Thickness (ft)	Depth to Water (ft)	Ground-water Elevation (ft)	Corrected Water Table[1] Elevation (ft)	Screened Interval Depth Top to Bottom (ft)
11/14/13	MKTF-02	03/11/15	4.00	6,915.00	6,917.45	2.45	6,896.97	20.48	ND	NA	6.88	6,910.57	NA	7 - 17
		06/09/15	4.00	6,915.00	6,917.45	2.45	6,896.97	20.48	ND	NA	7.55	6,909.90	NA	7 - 17
		08/21/15	4.00	6,915.00	6,917.45	2.45	6,896.97	20.48	ND	NA	7.30	6,910.15	NA	7 - 17
		11/04/15	4.00	6,915.00	6,917.45	2.45	6,896.97	20.48	ND	NA	7.25	6,910.20	NA	7 - 17
		02/24/16	4.00	6,915.00	6,917.45	2.45	6,896.97	20.48	ND	NA	7.22	6,910.23	NA	7 - 17
		06/10/16	4.00	6,915.00	6,917.45	2.45	6,896.97	20.48	ND	NA	8.09	6,909.36	NA	7 - 17
		09/07/16	4.00	6,915.00	6,917.45	2.45	6,896.97	20.48	ND	NA	8.28	6,909.17	NA	7 - 17
		11/04/16	4.00	6,915.00	6,917.45	2.45	6,896.97	20.48	ND	NA	7.25	6,910.20	NA	7 - 17
		03/16/17	4.00	6,915.00	6,917.45	2.45	6,896.97	20.48	ND	NA	7.34	6,910.11	NA	7 - 17
		06/07/17	4.00	6,915.00	6,917.45	2.45	6,896.97	20.48	7.10	0.01	7.11	6,910.34	6,910.35	7 - 17
		10/03/17	4.00	6,915.00	6,917.45	2.45	6,896.97	20.48	ND	NA	6.67	6,910.78	NA	7 - 17
		11/20/17	4.00	6,915.00	6,917.45	2.45	6,897.10	20.35	ND	NA	7.00	6,910.45	NA	7 - 17
		02/06/18	4.00	6,915.00	6,917.45	2.45	6,897.11	20.34	ND	NA	7.44	6,910.01	NA	7 - 17
		04/25/18	4.00	6,915.00	6,917.45	2.45	6,897.09	20.36	ND	NA	7.95	6,909.50	NA	7 - 17
		08/15/18	4.00	6,915.00	6,917.45	2.45	6,897.02	20.43	ND	NA	8.40	6,909.05	NA	7 - 17
		11/27/18	4.00	6,915.00	6,917.45	2.45	6,897.10	20.35	ND	NA	8.40	6,909.05	NA	7 - 17
		03/28/19	4.00	6,915.00	6,917.45	2.45	6,896.97	20.48	ND	NA	6.34	6,911.11	NA	7 - 17
		05/06/19	4.00	6,915.00	6,917.45	2.45	6,896.97	20.48	ND	NA	6.24	6,911.21	NA	7 - 17
		08/23/19	4.00	6,915.00	6,917.45	2.45	6,897.02	20.43	ND	NA	7.05	6,910.40	NA	7 - 17
		11/19/19	4.00	6,915.00	6,917.45	2.45	6,897.10	20.35	ND	NA	7.14	6,910.31	NA	7 - 17

TABLE 9.2
5-YEAR HISTORICAL DTB/DTW MEASUREMENTS FOR WELLS MKTF-01 THRU MKTF-50

Date of Installation	Well ID Number	Inspection or Sample Date	Casing Diameter (Inch)	Ground Level Elevation (ft)	Well Casing Rim Elevation (ft)	Stick-up length (ft)	Well Casing Bottom Elevation (ft)	Total Well Depth (ft)	Depth to SPH (ft)	SPH Column Thickness (ft)	Depth to Water (ft)	Ground-water Elevation (ft)	Corrected Water Table[1] Elevation (ft)	Screened Interval Depth Top to Bottom (ft)
11/07/13	MKTF-03	03/17/15	4.00	6,931.73	6,931.69	-0.04	6,913.24	18.45	8.46	0.80	9.26	6,922.43	6,923.07	3 - 18
		06/04/15	4.00	6,931.73	6,931.69	-0.04	6,913.24	18.45	8.70	0.62	9.32	6,922.37	6,922.87	3 - 18
		08/18/15	4.00	6,931.73	6,931.69	-0.04	6,913.24	18.45	8.09	0.82	8.91	6,922.78	6,923.44	3 - 18
		11/03/15	4.00	6,931.73	6,931.69	-0.04	6,913.24	18.45	8.30	1.10	9.40	6,922.29	6,923.17	3 - 18
		03/17/16	4.00	6,931.73	6,931.69	-0.04	6,913.24	18.45	8.46	0.80	9.26	6,922.43	6,923.07	3 - 18
		06/09/16	4.00	6,931.73	6,931.69	-0.04	6,913.24	18.45	7.55	4.28	11.83	6,919.86	6,923.28	3 - 18
		09/12/16	4.00	6,931.73	6,931.69	-0.04	6,913.24	18.45	7.92	2.40	10.32	6,921.37	6,923.29	3 - 18
		11/03/16	4.00	6,931.73	6,931.69	-0.04	6,913.24	18.45	8.30	1.10	9.40	6,922.29	6,923.17	3 - 18
		03/02/17	4.00	6,931.73	6,931.69	-0.04	6,913.24	18.45	6.42	1.17	7.59	6,924.10	6,925.04	3 - 18
		06/07/17	4.00	6,931.73	6,931.69	-0.04	6,913.24	18.45	6.95	1.30	8.25	6,923.44	6,924.48	3 - 18
		09/26/17	4.00	6,931.73	6,931.69	-0.04	6,913.24	18.45	6.35	0.80	7.15	6,924.54	6,925.18	3 - 18
		11/28/17	4.00	6,931.73	6,931.69	-0.04	6,913.24	18.45	7.00	0.95	7.95	6,923.74	6,924.50	3 - 18
		02/08/18	4.00	6,931.73	6,931.69	-0.04	6,913.24	18.45	7.40	0.85	8.25	6,923.44	6,924.12	3 - 18
		04/25/18	4.00	6,931.73	6,931.69	-0.04	6,913.24	18.45	7.30	0.92	8.22	6,923.47	6,924.21	3 - 18
		08/16/18	4.00	6,931.73	6,931.69	-0.04	6,913.16	18.53	7.30	0.95	8.25	6,923.44	6,924.20	3 - 18
		11/19/18	4.00	6,931.73	6,931.69	-0.04	6,913.24	18.45	6.85	1.00	7.85	6,923.84	6,924.64	3 - 18
		03/25/19	4.00	6,931.73	6,931.69	-0.04	6,913.24	18.45	4.50	1.10	5.60	6,926.09	6,926.97	3 - 18
		05/13/19	4.00	6,931.73	6,931.69	-0.04	6,913.24	18.45	4.55	1.11	5.66	6,926.03	6,926.92	3 - 18
		08/21/19	4.00	6,931.73	6,931.69	-0.04	6,913.16	18.53	6.04	1.23	7.27	6,924.42	6,925.40	3 - 18
		10/30/19	4.00	6,931.73	6,931.69	-0.04	6,913.24	18.45	6.70	1.30	8.00	6,923.69	6,924.73	3 - 18

TABLE 9.2
5-YEAR HISTORICAL DTB/DTW MEASUREMENTS FOR WELLS MKTF-01 THRU MKTF-50

Date of Installation	Well ID Number	Inspection or Sample Date	Casing Diameter (Inch)	Ground Level Elevation (ft)	Well Casing Rim Elevation (ft)	Stick-up length (ft)	Well Casing Bottom Elevation (ft)	Total Well Depth (ft)	Depth to SPH (ft)	SPH Column Thickness (ft)	Depth to Water (ft)	Ground-water Elevation (ft)	Corrected Water Table[1] Elevation (ft)	Screened Interval Depth Top to Bottom (ft)
11/12/13	MKTF-04	03/16/15	4.00	6,933.90	6,933.57	-0.33	6,911.42	22.15	ND	NA	10.25	6,923.32	NA	10 - 22
		06/04/15	4.00	6,933.90	6,933.57	-0.33	6,911.42	22.15	ND	NA	11.00	6,922.57	NA	10 - 22
		08/18/15	4.00	6,933.90	6,933.57	-0.33	6,911.42	22.15	ND	NA	10.64	6,922.93	NA	10 - 22
		11/03/15	4.00	6,933.90	6,933.57	-0.33	6,911.42	22.15	ND	NA	4.23	6,929.34	NA	10 - 22
		02/29/16	4.00	6,933.90	6,933.57	-0.33	6,911.42	22.15	ND	NA	10.68	6,922.89	NA	10 - 22
		06/09/16	4.00	6,933.90	6,933.57	-0.33	6,911.42	22.15	ND	NA	10.30	6,923.27	NA	10 - 22
		09/11/16	4.00	6,933.90	6,933.57	-0.33	6,911.42	22.15	ND	NA	10.23	6,923.34	NA	10 - 22
		11/03/16	4.00	6,933.90	6,933.57	-0.33	6,911.42	22.15	ND	NA	10.40	6,923.17	NA	10 - 22
		03/02/17	4.00	6,933.90	6,933.57	-0.33	6,911.42	22.15	ND	NA	8.31	6,925.26	NA	10 - 22
		06/07/17	4.00	6,933.90	6,933.57	-0.33	6,911.42	22.15	ND	NA	9.28	6,924.29	NA	10 - 22
		09/26/17	4.00	6,933.90	6,933.57	-0.33	6,911.42	22.15	ND	NA	8.80	6,924.77	NA	10 - 22
		11/29/17	4.00	6,933.90	6,933.57	-0.33	6,911.27	22.30	ND	NA	9.30	6,924.27	NA	10 - 22
		02/14/18	4.00	6,933.90	6,933.57	-0.33	6,911.20	22.37	ND	NA	9.85	6,923.72	NA	10 - 22
		04/25/18	4.00	6,933.90	6,933.57	-0.33	6,911.28	22.29	ND	NA	9.70	6,923.87	NA	10 - 22
		08/16/18	4.00	6,933.90	6,933.57	-0.33	6,911.18	22.39	ND	NA	9.70	6,923.87	NA	10 - 22
		11/19/18	4.00	6,933.90	6,933.57	-0.33	6,911.27	22.30	ND	NA	8.39	6,925.18	NA	10 - 22
		03/25/19	4.00	6,933.90	6,933.57	-0.33	6,911.42	22.15	ND	NA	6.45	6,927.12	NA	10 - 22
		05/13/19	4.00	6,933.90	6,933.57	-0.33	6,911.42	22.15	ND	NA	6.55	6,927.02	NA	10 - 22
		08/21/19	4.00	6,933.90	6,933.57	-0.33	6,911.18	22.39	ND	NA	8.27	6,925.30	NA	10 - 22
		10/30/19	4.00	6,933.90	6,933.57	-0.33	6,911.27	22.30	ND	NA	8.93	6,924.64	NA	10 - 22

TABLE 9.2
5-YEAR HISTORICAL DTB/DTW MEASUREMENTS FOR WELLS MKTF-01 THRU MKTF-50

Date of Installation	Well ID Number	Inspection or Sample Date	Casing Diameter (Inch)	Ground Level Elevation (ft)	Well Casing Rim Elevation (ft)	Stick-up length (ft)	Well Casing Bottom Elevation (ft)	Total Well Depth (ft)	Depth to SPH (ft)	SPH Column Thickness (ft)	Depth to Water (ft)	Ground-water Elevation (ft)	Corrected Water Table[1] Elevation (ft)	Screened Interval Depth Top to Bottom (ft)
11/20/13	MKTF-05	03/16/15	4.00	6,939.49	6,942.22	2.73	6,924.47	17.75	15.72	0.36	16.08	6,926.14	6,926.43	4 - 14
		06/04/15	4.00	6,939.49	6,942.22	2.73	6,924.47	17.75	15.77	0.63	16.40	6,925.82	6,926.32	4 - 14
		08/18/15	4.00	6,939.49	6,942.22	2.73	6,924.47	17.75	15.44	0.19	15.63	6,926.59	6,926.74	4 - 14
		11/03/15	4.00	6,939.49	6,942.22	2.73	6,924.47	17.75	15.47	0.84	16.31	6,925.91	6,926.58	4 - 14
		03/16/16	4.00	6,939.49	6,942.22	2.73	6,924.47	17.75	15.72	0.36	16.08	6,926.14	6,926.43	4 - 14
		06/09/16	4.00	6,939.49	6,942.22	2.73	6,924.47	17.75	15.34	0.53	15.87	6,926.35	6,926.77	4 - 14
		09/11/16	4.00	6,939.49	6,942.22	2.73	6,924.47	17.75	14.74	3.04	17.78	6,924.44	6,926.87	4 - 14
		11/03/16	4.00	6,939.49	6,942.22	2.73	6,924.47	17.75	15.47	0.84	16.31	6,925.91	6,926.58	4 - 14
		03/02/17	4.00	6,939.49	6,942.22	2.73	6,924.47	17.75	13.33	0.29	13.62	6,928.60	6,928.83	4 - 14
		06/07/17	4.00	6,939.49	6,942.22	2.73	6,924.47	17.75	13.79	0.46	14.25	6,927.97	6,928.34	4 - 14
		09/26/17	4.00	6,939.49	6,942.22	2.73	6,924.47	17.75	13.01	0.49	13.50	6,928.72	6,929.11	4 - 14
		11/28/17	4.00	6,939.49	6,942.22	2.73	6,924.47	17.75	13.98	0.77	14.75	6,927.47	6,928.09	4 - 14
		02/08/18	4.00	6,939.49	6,942.22	2.73	6,924.47	17.75	14.78	0.42	15.20	6,927.02	6,927.36	4 - 14
		04/25/18	4.00	6,939.49	6,942.22	2.73	6,924.52	17.70	14.96	0.23	15.19	6,927.03	6,927.21	4 - 14
		08/16/18	4.00	6,939.49	6,942.22	2.73	6,924.47	17.75	14.61	0.19	14.80	6,927.42	6,927.57	4 - 14
		11/19/18	4.00	6,939.49	6,942.22	2.73	6,924.47	17.75	14.62	0.21	14.83	6,927.39	6,927.56	4 - 14
		02/19/19	4.00	6,939.49	6,942.22	2.73	6,924.47	17.75	13.87	0.10	13.97	6,928.25	6,928.33	4 - 14
		05/13/19	4.00	6,939.49	6,942.22	2.73	6,924.47	17.75	12.95	0.17	13.12	6,929.10	6,929.24	4 - 14
		08/30/19	4.00	6,939.49	6,942.22	2.73	6,924.47	17.75	13.40	0.20	13.60	6,928.62	6,928.78	4 - 14
		10/30/19	4.00	6,939.49	6,942.22	2.73	6,924.47	17.75	13.90	0.30	14.20	6,928.02	6,928.26	4 - 14
		11/12/19	4.00	6,939.49	6,942.22	2.73	6,924.47	17.75	11.64	5.09	16.73	6,925.49	6929.56	4 - 14
		11/13/19	4.00	6,939.49	6,942.22	2.73	6,924.47	17.75	10.96	6.19	17.15	6,925.07	6930.02	4 - 14
		11/14/19	4.00	6,939.49	6,942.22	2.73	6,924.47	17.75	10.78	6.39	17.17	6,925.05	6930.16	4 - 14
		11/15/19	4.00	6,939.49	6,942.22	2.73	6,924.47	17.75	10.54	6.62	17.16	6,925.06	6930.36	4 - 14
		11/19/19	4.00	6,939.49	6,942.22	2.73	6,924.47	17.75	10.04	7.14	17.18	6,925.04	6930.75	4 - 14
		11/21/19	4.00	6,939.49	6,942.22	2.73	6,924.47	17.75	9.97	7.21	17.18	6,925.04	6930.81	4 - 14
		12/02/19	4.00	6,939.49	6,942.22	2.73	6,924.47	17.75	10.64	6.53	17.17	6,925.05	6930.27	4 - 14

TABLE 9.2
5-YEAR HISTORICAL DTB/DTW MEASUREMENTS FOR WELLS MKTF-01 THRU MKTF-50

Date of Installation	Well ID Number	Inspection or Sample Date	Casing Diameter (Inch)	Ground Level Elevation (ft)	Well Casing Rim Elevation (ft)	Stick-up length (ft)	Well Casing Bottom Elevation (ft)	Total Well Depth (ft)	Depth to SPH (ft)	SPH Column Thickness (ft)	Depth to Water (ft)	Ground-water Elevation (ft)	Corrected Water Table[1] Elevation (ft)	Screened Interval Depth Top to Bottom (ft)
11/11/13	MKTF-06	03/16/15	4.00	6,944.24	6,946.81	2.57	6,923.04	23.77	18.24	1.70	19.94	6,926.87	6,928.23	8 - 20
		06/04/15	4.00	6,944.24	6,946.81	2.57	6,923.04	23.77	18.56	0.84	19.40	6,927.41	6,928.08	8 - 20
		08/15/15	4.00	6,944.24	6,946.81	2.57	6,923.04	23.77	17.53	0.86	18.39	6,928.42	6,929.11	8 - 20
		11/03/15	4.00	6,944.24	6,946.81	2.57	6,923.04	23.77	18.04	0.74	18.78	6,928.03	6,928.62	8 - 20
		03/16/16	4.00	6,944.24	6,946.81	2.57	6,923.04	23.77	18.24	1.70	19.94	6,926.87	6,928.23	8 - 20
		06/09/16	4.00	6,944.24	6,946.81	2.57	6,923.04	23.77	18.02	0.94	18.96	6,927.85	6,928.60	8 - 20
		09/11/16	4.00	6,944.24	6,946.81	2.57	6,923.04	23.77	17.40	1.08	18.48	6,928.33	6,929.19	8 - 20
		11/03/16	4.00	6,944.24	6,946.81	2.57	6,923.04	23.77	18.04	0.74	18.78	6,928.03	6,928.62	8 - 20
		03/15/17	4.00	6,944.24	6,946.81	2.57	6,923.04	23.77	15.95	0.10	16.05	6,930.76	6,930.84	8 - 20
		06/12/17	4.00	6,944.24	6,946.81	2.57	6,923.04	23.77	16.60	0.64	17.24	6,929.57	6,930.08	8 - 20
		09/26/17	4.00	6,944.24	6,946.81	2.57	6,923.04	23.77	16.01	0.71	16.72	6,930.09	6,930.66	8 - 20
		11/28/17	4.00	6,944.24	6,946.81	2.57	6,923.04	23.77	16.55	1.15	17.70	6,929.11	6,930.03	8 - 20
		02/08/18	4.00	6,944.24	6,946.81	2.57	6,923.04	23.77	17.14	1.38	18.52	6,928.29	6,929.39	8 - 20
		04/25/18	4.00	6,944.24	6,946.81	2.57	6,923.09	23.72	17.29	1.32	18.61	6,928.20	6,929.26	8 - 20
		08/16/18	4.00	6,944.24	6,946.81	2.57	6,923.02	23.79	16.83	1.17	18.00	6,928.81	6,929.75	8 - 20
		11/19/18	4.00	6,944.24	6,946.81	2.57	6,923.04	23.77	16.85	1.16	18.01	6,928.80	6,929.73	8 - 20
		02/19/19	4.00	6,944.24	6,946.81	2.57	6,923.04	23.77	15.79	0.76	16.55	6,930.26	6,930.87	8 - 20
		05/13/19	4.00	6,944.24	6,946.81	2.57	6,923.04	23.77	15.55	0.84	16.39	6,930.42	6,931.09	8 - 20
		08/30/19	4.00	6,944.24	6,946.81	2.57	6,923.02	23.79	15.82	0.78	16.60	6,930.21	6,930.83	8 - 20
		10/30/19	4.00	6,944.24	6,946.81	2.57	6,923.04	23.77	16.80	1.11	17.91	6,928.90	6,929.79	8 - 20
		11/12/19	4.00	6,944.24	6,946.81	2.57	6,923.04	23.77	16.52	0.96	17.48	6,929.33	6930.10	8 - 20
		11/13/19	4.00	6,944.24	6,946.81	2.57	6,923.04	23.77	16.33	0.85	17.18	6,929.63	6930.31	8 - 20
		11/14/19	4.00	6,944.24	6,946.81	2.57	6,923.04	23.77	16.42	0.89	17.31	6,929.50	6930.21	8 - 20
		11/15/19	4.00	6,944.24	6,946.81	2.57	6,923.04	23.77	16.35	0.85	17.20	6,929.61	6930.29	8 - 20
		11/19/19	4.00	6,944.24	6,946.81	2.57	6,923.04	23.77	16.08	0.75	16.83	6,929.98	6930.58	8 - 20
		11/21/19	4.00	6,944.24	6,946.81	2.57	6,923.04	23.77	15.93	1.31	17.24	6,929.57	6930.62	8 - 20
		12/02/19	4.00	6,944.24	6,946.81	2.57	6,923.04	23.77	14.75	6.61	21.36	6,925.45	6930.74	8 - 20

TABLE 9.2
5-YEAR HISTORICAL DTB/DTW MEASUREMENTS FOR WELLS MKTF-01 THRU MKTF-50

Date of Installation	Well ID Number	Inspection or Sample Date	Casing Diameter (Inch)	Ground Level Elevation (ft)	Well Casing Rim Elevation (ft)	Stick-up length (ft)	Well Casing Bottom Elevation (ft)	Total Well Depth (ft)	Depth to SPH (ft)	SPH Column Thickness (ft)	Depth to Water (ft)	Ground-water Elevation (ft)	Corrected Water Table[1] Elevation (ft)	Screened Interval Depth Top to Bottom (ft)
11/11/13	MKTF-07	03/16/15	4.00	6,944.40	6,947.18	2.78	6,929.56	17.62	13.10	1.13	14.23	6,932.95	6,933.85	4 - 14
		06/04/15	4.00	6,944.40	6,947.18	2.78	6,929.56	17.62	12.95	1.65	14.60	6,932.58	6,933.90	4 - 14
		08/18/15	4.00	6,944.40	6,947.18	2.78	6,929.56	17.62	12.71	1.13	13.84	6,933.34	6,934.24	4 - 14
		11/03/15	4.00	6,944.40	6,947.18	2.78	6,929.56	17.62	12.90	1.98	14.88	6,932.30	6,933.88	4 - 14
		03/16/16	4.00	6,944.40	6,947.18	2.78	6,929.56	17.62	13.10	1.13	14.23	6,932.95	6,933.85	4 - 14
		06/09/16	4.00	6,944.40	6,947.18	2.78	6,929.56	17.62	12.01	2.59	14.60	6,932.58	6,934.65	4 - 14
		09/11/16	4.00	6,944.40	6,947.18	2.78	6,929.56	17.62	12.20	2.41	14.61	6,932.57	6,934.50	4 - 14
		11/03/16	4.00	6,944.40	6,947.18	2.78	6,929.56	17.62	12.90	1.98	14.88	6,932.30	6,933.88	4 - 14
		03/15/17	4.00	6,944.40	6,947.18	2.78	6,929.56	17.62	10.63	1.97	12.60	6,934.58	6,936.16	4 - 14
		06/12/17	4.00	6,944.40	6,947.18	2.78	6,929.56	17.62	10.20	1.30	11.50	6,935.68	6,936.72	4 - 14
		09/26/17	4.00	6,944.40	6,947.18	2.78	6,929.56	17.62	9.80	1.30	11.10	6,936.08	6,937.12	4 - 14
		11/28/17	4.00	6,944.40	6,947.18	2.78	6,929.56	17.62	10.40	1.40	11.80	6,935.38	6,936.50	4 - 14
		02/08/18	4.00	6,944.40	6,947.18	2.78	6,929.56	17.62	11.33	1.22	12.55	6,934.63	6,935.61	4 - 14
		04/25/18	4.00	6,944.40	6,947.18	2.78	6,929.60	17.58	10.84	1.18	12.02	6,935.16	6,936.10	4 - 14
		08/16/18	4.00	6,944.40	6,947.18	2.78	6,929.71	17.47	11.42	1.08	12.50	6,934.68	6,935.54	4 - 14
		11/27/18	4.00	6,944.40	6,947.18	2.78	6,929.56	17.62	12.35	1.17	13.52	6,933.66	6,934.60	4 - 14
		02/19/19	4.00	6,944.40	6,947.18	2.78	6,929.56	17.62	10.39	1.21	11.60	6,935.58	6,936.55	4 - 14
		05/13/19	4.00	6,944.40	6,947.18	2.78	6,929.56	17.62	10.72	0.10	10.82	6,936.36	6,936.44	4 - 14
		08/30/19	4.00	6,944.40	6,947.18	2.78	6,929.71	17.47	11.18	1.11	12.29	6,934.89	6,935.78	4 - 14
		10/30/19	4.00	6,944.40	6,947.18	2.78	6,929.56	17.62	12.20	1.19	13.39	6,933.79	6,934.74	4 - 14
		11/12/19	4.00	6,944.40	6,947.18	2.78	6,929.56	17.62	12.03	1.16	13.19	6,933.99	6934.92	4 - 14
		11/13/19	4.00	6,944.40	6,947.18	2.78	6,929.56	17.62	11.81	1.08	12.89	6,934.29	6935.15	4 - 14
		11/14/19	4.00	6,944.40	6,947.18	2.78	6,929.56	17.62	11.98	1.16	13.14	6,934.04	6934.97	4 - 14
		11/15/19	4.00	6,944.40	6,947.18	2.78	6,929.56	17.62	12.00	1.16	13.16	6,934.02	6934.95	4 - 14
		11/19/19	4.00	6,944.40	6,947.18	2.78	6,929.56	17.62	11.40	2.77	14.17	6,933.01	6935.23	4 - 14
		11/21/19	4.00	6,944.40	6,947.18	2.78	6,929.56	17.62	10.83	5.72	16.55	6,930.63	6935.21	4 - 14
		12/02/19	4.00	6,944.40	6,947.18	2.78	6,929.56	17.62	11.38	5.74	17.12	6,930.06	6934.65	4 - 14

TABLE 9.2
5-YEAR HISTORICAL DTB/DTW MEASUREMENTS FOR WELLS MKTF-01 THRU MKTF-50

Date of Installation	Well ID Number	Inspection or Sample Date	Casing Diameter (Inch)	Ground Level Elevation (ft)	Well Casing Rim Elevation (ft)	Stick-up length (ft)	Well Casing Bottom Elevation (ft)	Total Well Depth (ft)	Depth to SPH (ft)	SPH Column Thickness (ft)	Depth to Water (ft)	Ground-water Elevation (ft)	Corrected Water Table[1] Elevation (ft)	Screened Interval Depth Top to Bottom (ft)
11/11/13	MKTF-08	03/16/15	4.00	6,944.02	6,947.09	3.07	6,925.11	21.98	14.25	0.25	14.50	6,932.59	6,932.79	8 - 18
		06/04/15	4.00	6,944.02	6,947.09	3.07	6,925.11	21.98	14.35	0.56	14.91	6,932.18	6,932.63	8 - 18
		08/18/15	4.00	6,944.02	6,947.09	3.07	6,925.11	21.98	13.79	0.96	14.75	6,932.34	6,933.11	8 - 18
		11/08/15	4.00	6,944.02	6,947.09	3.07	6,925.11	21.98	13.84	1.48	15.32	6,931.77	6,932.95	8 - 18
		03/16/16	4.00	6,944.02	6,947.09	3.07	6,925.11	21.98	14.25	0.25	14.50	6,932.59	6,932.79	8 - 18
		06/09/16	4.00	6,944.02	6,947.09	3.07	6,925.11	21.98	13.48	0.70	14.18	6,932.91	6,933.47	8 - 18
		09/11/16	4.00	6,944.02	6,947.09	3.07	6,925.11	21.98	13.63	0.66	14.29	6,932.80	6,933.33	8 - 18
		11/08/16	4.00	6,944.02	6,947.09	3.07	6,925.11	21.98	13.84	1.48	15.32	6,931.77	6,932.95	8 - 18
		03/15/17	4.00	6,944.02	6,947.09	3.07	6,925.11	21.98	11.99	0.61	12.60	6,934.49	6,934.98	8 - 18
		06/12/17	4.00	6,944.02	6,947.09	3.07	6,925.11	21.98	11.98	0.42	12.40	6,934.69	6,935.03	8 - 18
		09/26/17	4.00	6,944.02	6,947.09	3.07	6,925.11	21.98	12.15	0.45	12.60	6,934.49	6,934.85	8 - 18
		11/28/17	4.00	6,944.02	6,947.09	3.07	6,925.11	21.98	12.68	0.52	13.20	6,933.89	6,934.31	8 - 18
		02/08/18	4.00	6,944.02	6,947.09	3.07	6,925.11	21.98	13.29	0.34	13.63	6,933.46	6,933.73	8 - 18
		04/25/18	4.00	6,944.02	6,947.09	3.07	6,925.15	21.94	13.00	0.33	13.33	6,933.76	6,934.02	8 - 18
		08/16/18	4.00	6,944.02	6,947.09	3.07	6,925.11	21.98	12.96	0.39	13.35	6,933.74	6,934.05	8 - 18
		11/27/18	4.00	6,944.02	6,947.09	3.07	6,925.11	21.98	13.41	0.39	13.80	6,933.29	6,933.60	8 - 18
		02/19/19	4.00	6,944.02	6,947.09	3.07	6,925.11	21.98	11.35	0.65	12.00	6,935.09	6,935.61	8 - 18
		05/13/19	4.00	6,944.02	6,947.09	3.07	6,925.11	21.98	11.95	0.48	12.43	6,934.66	6,935.04	8 - 18
		08/30/19	4.00	6,944.02	6,947.09	3.07	6,925.11	21.98	12.50	0.40	12.90	6,934.19	6,934.51	8 - 18
		10/30/19	4.00	6,944.02	6,947.09	3.07	6,925.11	21.98	13.54	0.45	13.99	6,933.10	6,933.46	8 - 18
		11/21/19	4.00	6,944.02	6,947.09	3.07	6,925.11	21.98	13.47	0.38	13.85	6,933.24	6933.54	8 - 18
		12/02/19	4.00	6,944.02	6,947.09	3.07	6,925.11	21.98	13.72	0.41	14.13	6,932.96	6933.29	8 - 18

TABLE 9.2
5-YEAR HISTORICAL DTB/DTW MEASUREMENTS FOR WELLS MKTF-01 THRU MKTF-50

Date of Installation	Well ID Number	Inspection or Sample Date	Casing Diameter (Inch)	Ground Level Elevation (ft)	Well Casing Rim Elevation (ft)	Stick-up length (ft)	Well Casing Bottom Elevation (ft)	Total Well Depth (ft)	Depth to SPH (ft)	SPH Column Thickness (ft)	Depth to Water (ft)	Ground-water Elevation (ft)	Corrected Water Table[1] Elevation (ft)	Screened Interval Depth Top to Bottom (ft)
11/11/13	MKTF-09	03/16/15	4.00	6,943.57	6,946.50	2.93	6,923.80	22.70	ND	NA	14.48	6,932.02	NA	7 - 19
		06/04/15	4.00	6,943.57	6,946.50	2.93	6,923.80	22.70	ND	NA	14.68	6,931.82	NA	7 - 19
		08/18/15	4.00	6,943.57	6,946.50	2.93	6,923.80	22.70	ND	NA	14.49	6,932.01	NA	7 - 19
		11/03/15	4.00	6,943.57	6,946.50	2.93	6,923.80	22.70	ND	NA	14.29	6,932.21	NA	7 - 19
		02/29/16	4.00	6,943.57	6,946.50	2.93	6,923.80	22.70	ND	NA	14.15	6,932.35	NA	7 - 19
		06/09/16	4.00	6,943.57	6,946.50	2.93	6,923.80	22.70	ND	NA	13.92	6,932.58	NA	7 - 19
		09/11/16	4.00	6,943.57	6,946.50	2.93	6,923.80	22.70	ND	NA	14.20	6,932.30	NA	7 - 19
		11/03/16	4.00	6,943.57	6,946.50	2.93	6,923.80	22.70	ND	NA	14.29	6,932.21	NA	7 - 19
		03/15/17	4.00	6,943.57	6,946.50	2.93	6,923.80	22.70	ND	NA	12.64	6,933.86	NA	7 - 19
		06/12/17	4.00	6,943.57	6,946.50	2.93	6,923.80	22.70	ND	NA	12.64	6,933.86	NA	7 - 19
		09/28/17	4.00	6,943.57	6,946.50	2.93	6,923.80	22.70	ND	NA	12.69	6,933.81	NA	7 - 19
		11/29/17	4.00	6,943.57	6,946.50	2.93	6,923.75	22.75	ND	NA	13.15	6,933.35	NA	7 - 19
		02/14/18	4.00	6,943.57	6,946.50	2.93	6,923.76	22.74	ND	NA	13.76	6,932.74	NA	7 - 19
		04/25/18	4.00	6,943.57	6,946.50	2.93	6,923.81	22.69	ND	NA	13.42	6,933.08	NA	7 - 19
		08/16/18	4.00	6,943.57	6,946.50	2.93	6,923.76	22.74	ND	NA	13.49	6,933.01	NA	7 - 19
		11/27/18	4.00	6,943.57	6,946.50	2.93	6,923.75	22.75	ND	NA	13.81	6,932.69	NA	7 - 19
		03/25/19	4.00	6,943.57	6,946.50	2.93	6,923.80	22.70	ND	NA	11.10	6,935.40	NA	7 - 19
		05/13/19	4.00	6,943.57	6,946.50	2.93	6,923.80	22.70	ND	NA	12.27	6,934.23	NA	7 - 19
		08/28/19	4.00	6,943.57	6,946.50	2.93	6,923.76	22.74	ND	NA	13.28	6,933.22	NA	7 - 19
		11/18/19	4.00	6,943.57	6,946.50	2.93	6,923.75	22.75	ND	NA	13.97	6,932.53	NA	7 - 19

TABLE 9.2
5-YEAR HISTORICAL DTB/DTW MEASUREMENTS FOR WELLS MKTF-01 THRU MKTF-50

Date of Installation	Well ID Number	Inspection or Sample Date	Casing Diameter (Inch)	Ground Level Elevation (ft)	Well Casing Rim Elevation (ft)	Stick-up length (ft)	Well Casing Bottom Elevation (ft)	Total Well Depth (ft)	Depth to SPH (ft)	SPH Column Thickness (ft)	Depth to Water (ft)	Ground-water Elevation (ft)	Corrected Water Table[1] Elevation (ft)	Screened Interval Depth Top to Bottom (ft)
10/31/13	MKTF-10	03/16/15	4.00	6,937.51	6,937.16	-0.35	6,921.17	15.99	ND	NA	8.96	6,928.20	NA	7 - 17
		06/04/15	4.00	6,937.51	6,937.16	-0.35	6,921.17	15.99	ND	NA	8.82	6,928.34	NA	7 - 17
		08/18/15	4.00	6,937.51	6,937.16	-0.35	6,921.17	15.99	ND	NA	8.72	6,928.44	NA	7 - 17
		11/03/15	4.00	6,937.51	6,937.16	-0.35	6,921.17	15.99	ND	NA	8.84	6,928.32	NA	7 - 17
		02/29/16	4.00	6,937.51	6,937.16	-0.35	6,921.17	15.99	ND	NA	8.60	6,928.56	NA	7 - 17
		06/09/16	4.00	6,937.51	6,937.16	-0.35	6,921.17	15.99	ND	NA	8.20	6,928.96	NA	7 - 17
		09/11/16	4.00	6,937.51	6,937.16	-0.35	6,921.17	15.99	ND	NA	8.45	6,928.71	NA	7 - 17
		11/03/16	4.00	6,937.51	6,937.16	-0.35	6,921.17	15.99	ND	NA	8.84	6,928.32	NA	7 - 17
		03/02/17	4.00	6,937.51	6,937.16	-0.35	6,921.17	15.99	ND	NA	7.47	6,929.69	NA	7 - 17
		06/07/17	4.00	6,937.51	6,937.16	-0.35	6,921.17	15.99	ND	NA	7.02	6,930.14	NA	7 - 17
		09/27/17	4.00	6,937.51	6,937.16	-0.35	6,921.17	15.99	ND	NA	6.78	6,930.38	NA	7 - 17
		11/29/17	4.00	6,937.51	6,937.16	-0.35	6,921.17	15.99	ND	NA	7.00	6,930.16	NA	7 - 17
		02/14/18	4.00	6,937.51	6,937.16	-0.35	6,921.06	16.10	ND	NA	7.30	6,929.86	NA	7 - 17
		04/25/18	4.00	6,937.51	6,937.16	-0.35	6,921.11	16.05	ND	NA	7.05	6,930.11	NA	7 - 17
		08/16/18	4.00	6,937.51	6,937.16	-0.35	6,920.88	16.28	ND	NA	7.08	6,930.08	NA	7 - 17
		11/19/18	4.00	6,937.51	6,937.16	-0.35	6,921.17	15.99	ND	NA	7.25	6,929.91	NA	7 - 17
		03/25/19	4.00	6,937.51	6,937.16	-0.35	6,921.17	15.99	ND	NA	5.70	6,931.46	NA	7 - 17
		05/13/19	4.00	6,937.51	6,937.16	-0.35	6,921.17	15.99	ND	NA	6.23	6,930.93	NA	7 - 17
		08/21/19	4.00	6,937.51	6,937.16	-0.35	6,920.88	16.28	ND	NA	7.65	6,929.51	NA	7 - 17
		10/30/19	4.00	6,937.51	6,937.16	-0.35	6,921.17	15.99	ND	NA	7.28	6,929.88	NA	7 - 17

TABLE 9.2
5-YEAR HISTORICAL DTB/DTW MEASUREMENTS FOR WELLS MKTF-01 THRU MKTF-50

Date of Installation	Well ID Number	Inspection or Sample Date	Casing Diameter (Inch)	Ground Level Elevation (ft)	Well Casing Rim Elevation (ft)	Stick-up length (ft)	Well Casing Bottom Elevation (ft)	Total Well Depth (ft)	Depth to SPH (ft)	SPH Column Thickness (ft)	Depth to Water (ft)	Ground-water Elevation (ft)	Corrected Water Table[1] Elevation (ft)	Screened Interval Depth Top to Bottom (ft)
10/31/13	MKTF-11	03/16/15	4.00	6,931.61	6,931.34	-0.27	6,913.20	18.14	ND	NA	8.80	6,922.54	NA	8 - 18
		06/04/15	4.00	6,931.61	6,931.34	-0.27	6,913.20	18.14	ND	NA	9.00	6,922.34	NA	8 - 18
		08/18/15	4.00	6,931.61	6,931.34	-0.27	6,913.20	18.14	ND	NA	8.45	6,922.89	NA	8 - 18
		11/03/15	4.00	6,931.61	6,931.34	-0.27	6,913.20	18.14	ND	NA	8.63	6,922.71	NA	8 - 18
		02/29/16	4.00	6,931.61	6,931.34	-0.27	6,913.20	18.14	ND	NA	8.80	6,922.54	NA	8 - 18
		06/09/16	4.00	6,931.61	6,931.34	-0.27	6,913.20	18.14	ND	NA	8.66	6,922.68	NA	8 - 18
		09/11/16	4.00	6,931.61	6,931.34	-0.27	6,913.20	18.14	ND	NA	8.70	6,922.64	NA	8 - 18
		11/03/16	4.00	6,931.61	6,931.34	-0.27	6,913.20	18.14	ND	NA	8.63	6,922.71	NA	8 - 18
		03/02/17	4.00	6,931.61	6,931.34	-0.27	6,913.20	18.14	ND	NA	6.96	6,924.38	NA	8 - 18
		06/07/17	4.00	6,931.61	6,931.34	-0.27	6,913.20	18.14	ND	NA	7.39	6,923.95	NA	8 - 18
		09/26/17	4.00	6,931.61	6,931.34	-0.27	6,913.20	18.14	ND	NA	6.70	6,924.64	NA	8 - 18
		11/29/17	4.00	6,931.61	6,931.34	-0.27	6,913.20	18.14	ND	NA	8.00	6,923.34	NA	8 - 18
		02/08/18	4.00	6,931.61	6,931.34	-0.27	6,913.03	18.31	ND	NA	7.87	6,923.47	NA	8 - 18
		04/25/18	4.00	6,931.61	6,931.34	-0.27	6,912.95	18.39	ND	NA	7.85	6,923.49	NA	8 - 18
		08/16/18	4.00	6,931.61	6,931.34	-0.27	6,912.86	18.48	ND	NA	7.48	6,923.86	NA	8 - 18
		11/19/18	4.00	6,931.61	6,931.34	-0.27	6,913.20	18.14	ND	NA	7.20	6,924.14	NA	8 - 18
		03/25/19	4.00	6,931.61	6,931.34	-0.27	6,913.20	18.14	ND	NA	4.96	6,926.38	NA	8 - 18
		05/13/19	4.00	6,931.61	6,931.34	-0.27	6,913.20	18.14	ND	NA	5.24	6,926.10	NA	8 - 18
		08/21/19	4.00	6,931.61	6,931.34	-0.27	6,912.86	18.48	ND	NA	6.22	6,925.12	NA	8 - 18
		10/30/19	4.00	6,931.61	6,931.34	-0.27	6,913.20	18.14	ND	NA	7.06	6,924.28	NA	8 - 18

TABLE 9.2
5-YEAR HISTORICAL DTB/DTW MEASUREMENTS FOR WELLS MKTF-01 THRU MKTF-50

Date of Installation	Well ID Number	Inspection or Sample Date	Casing Diameter (Inch)	Ground Level Elevation (ft)	Well Casing Rim Elevation (ft)	Stick-up length (ft)	Well Casing Bottom Elevation (ft)	Total Well Depth (ft)	Depth to SPH (ft)	SPH Column Thickness (ft)	Depth to Water (ft)	Ground-water Elevation (ft)	Corrected Water Table[1] Elevation (ft)	Screened Interval Depth Top to Bottom (ft)
11/07/13	MKTF-12	03/12/15	4.00	6,939.70	6,942.11	2.41	6,916.51	25.60	19.13	1.81	20.94	6,921.17	6,922.62	12 - 22
		06/09/15	4.00	6,939.70	6,942.11	2.41	6,916.51	25.60	19.47	2.18	21.65	6,920.46	6,922.20	12 - 22
		08/18/15	4.00	6,939.70	6,942.11	2.41	6,916.51	25.60	19.46	0.53	19.99	6,922.12	6,922.54	12 - 22
		11/03/15	4.00	6,939.70	6,942.11	2.41	6,916.51	25.60	19.66	0.61	20.27	6,921.84	6,922.33	12 - 22
		03/12/16	4.00	6,939.70	6,942.11	2.41	6,916.51	25.60	19.13	1.81	20.94	6,921.17	6,922.62	12 - 22
		06/10/16	4.00	6,939.70	6,942.11	2.41	6,916.51	25.60	18.23	1.32	19.55	6,922.56	6,923.62	12 - 22
		09/10/16	4.00	6,939.70	6,942.11	2.41	6,916.51	25.60	19.23	0.32	19.55	6,922.56	6,922.82	12 - 22
		11/03/16	4.00	6,939.70	6,942.11	2.41	6,916.51	25.60	19.66	0.61	20.27	6,921.84	6,922.33	12 - 22
		03/15/17	4.00	6,939.70	6,942.11	2.41	6,916.51	25.60	17.75	0.06	17.81	6,924.30	6,924.35	12 - 22
		06/07/17	4.00	6,939.70	6,942.11	2.41	6,916.51	25.60	18.60	0.19	18.79	6,923.32	6,923.47	12 - 22
		10/03/17	4.00	6,939.70	6,942.11	2.41	6,916.51	25.60	17.30	0.13	17.43	6,924.68	6,924.78	12 - 22
		11/27/17	4.00	6,939.70	6,942.11	2.41	6,916.51	25.60	18.43	0.13	18.56	6,923.55	6,923.65	12 - 22
		02/07/18	4.00	6,939.70	6,942.11	2.41	6,916.51	25.60	19.11	0.17	19.28	6,922.83	6,922.97	12 - 22
		04/26/18	4.00	6,939.70	6,942.11	2.41	6,916.53	25.58	19.11	0.12	19.23	6,922.88	6,922.98	12 - 22
		08/15/18	4.00	6,939.70	6,942.11	2.41	6,916.51	25.60	19.01	0.19	19.20	6,922.91	6,923.06	12 - 22
		11/27/18	4.00	6,939.70	6,942.11	2.41	6,916.51	25.60	18.40	0.14	18.54	6,923.57	6,923.68	12 - 22
		03/26/19	4.00	6,939.70	6,942.11	2.41	6,916.51	25.60	16.65	0.35	17.00	6,925.11	6,925.39	12 - 22
		05/09/19	4.00	6,939.70	6,942.11	2.41	6,916.51	25.60	17.25	0.10	17.35	6,924.76	6,924.84	12 - 22
		08/20/19	4.00	6,939.70	6,942.11	2.41	6,916.51	25.60	17.92	0.09	18.01	6,924.10	6,924.17	12 - 22
		10/28/19	4.00	6,939.70	6,942.11	2.41	6,916.51	25.60	18.35	0.12	18.47	6,923.64	6,923.74	12 - 22
		11/12/19	4.00	6,939.70	6,942.11	2.41	6,916.51	25.60	18.14	0.08	18.22	6,923.89	6923.95	12 - 22
		11/13/19	4.00	6,939.70	6,942.11	2.41	6,916.51	25.60	18.02	0.10	18.12	6,923.99	6924.07	12 - 22
		11/14/19	4.00	6,939.70	6,942.11	2.41	6,916.51	25.60	18.11	0.08	18.19	6,923.92	6923.98	12 - 22
		11/15/19	4.00	6,939.70	6,942.11	2.41	6,916.51	25.60	18.10	0.08	18.18	6,923.93	6923.99	12 - 22
		11/19/19	4.00	6,939.70	6,942.11	2.41	6,916.51	25.60	18.00	0.09	18.09	6,924.02	6924.09	12 - 22
		11/21/19	4.00	6,939.70	6,942.11	2.41	6,916.51	25.60	18.04	0.16	18.20	6,923.91	6924.04	12 - 22
		12/02/19	4.00	6,939.70	6,942.11	2.41	6,916.51	25.60	17.70	0.05	17.75	6,924.36	6924.40	12 - 22

TABLE 9.2
5-YEAR HISTORICAL DTB/DTW MEASUREMENTS FOR WELLS MKTF-01 THRU MKTF-50

Date of Installation	Well ID Number	Inspection or Sample Date	Casing Diameter (Inch)	Ground Level Elevation (ft)	Well Casing Rim Elevation (ft)	Stick-up length (ft)	Well Casing Bottom Elevation (ft)	Total Well Depth (ft)	Depth to SPH (ft)	SPH Column Thickness (ft)	Depth to Water (ft)	Ground-water Elevation (ft)	Corrected Water Table[1] Elevation (ft)	Screened Interval Depth Top to Bottom (ft)
11/12/13	MKTF-13	03/12/15	4.00	6,933.67	6,935.18	1.51	6,913.93	21.25	13.75	2.07	15.82	6,919.36	6,921.02	8 - 18
		06/09/15	4.00	6,933.67	6,935.18	1.51	6,913.93	21.25	14.22	1.65	15.87	6,919.31	6,920.63	8 - 18
		08/21/15	4.00	6,933.67	6,935.18	1.51	6,913.93	21.25	13.94	1.68	15.62	6,919.56	6,920.90	8 - 18
		11/03/15	4.00	6,933.67	6,935.18	1.51	6,913.93	21.25	14.22	1.33	15.55	6,919.63	6,920.69	8 - 18
		03/12/16	4.00	6,933.67	6,935.18	1.51	6,913.93	21.25	13.75	2.07	15.82	6,919.36	6,921.02	8 - 18
		06/10/16	4.00	6,933.67	6,935.18	1.51	6,913.93	21.25	12.99	1.20	14.19	6,920.99	6,921.95	8 - 18
		09/10/16	4.00	6,933.67	6,935.18	1.51	6,913.93	21.25	13.88	0.98	14.86	6,920.32	6,921.10	8 - 18
		11/03/16	4.00	6,933.67	6,935.18	1.51	6,913.93	21.25	14.22	1.33	15.55	6,919.63	6,920.69	8 - 18
		03/15/17	4.00	6,933.67	6,935.18	1.51	6,913.93	21.25	ND	NA	12.60	6,922.58	NA	8 - 18
		06/07/17	4.00	6,933.67	6,935.18	1.51	6,913.93	21.25	13.35	0.06	13.41	6,921.77	6,921.82	8 - 18
		10/03/17	4.00	6,933.67	6,935.18	1.51	6,913.93	21.25	11.91	0.03	11.94	6,923.24	6,923.26	8 - 18
		11/27/17	4.00	6,933.67	6,935.18	1.51	6,913.93	21.25	13.14	0.01	13.15	6,922.03	6,922.04	8 - 18
		02/07/18	4.00	6,933.67	6,935.18	1.51	6,913.93	21.25	13.77	0.01	13.78	6,921.40	6,921.41	8 - 18
		04/26/18	4.00	6,933.67	6,935.18	1.51	6,913.52	21.66	ND	NA	13.75	6,921.43	NA	8 - 18
		08/15/18	4.00	6,933.67	6,935.18	1.51	6,913.63	21.55	ND	NA	13.68	6,921.50	NA	8 - 18
		11/27/18	4.00	6,933.67	6,935.18	1.51	6,913.93	21.25	ND	NA	12.72	6,922.46	NA	8 - 18
		03/26/19	4.00	6,933.67	6,935.18	1.51	6,913.93	21.25	ND	NA	10.90	6,924.28	NA	8 - 18
		05/09/19	4.00	6,933.67	6,935.18	1.51	6,913.93	21.25	ND	NA	11.60	6,923.58	NA	8 - 18
		08/20/19	4.00	6,933.67	6,935.18	1.51	6,913.63	21.55	ND	NA	12.45	6,922.73	NA	8 - 18
		10/28/19	4.00	6,933.67	6,935.18	1.51	6,913.93	21.25	ND	NA	12.95	6,922.23	NA	8 - 18
		11/12/19	4.00	6,933.67	6,935.18	1.51	6,913.93	21.25	ND	NA	12.82	6,922.36	NA	8 - 18
		11/13/19	4.00	6,933.67	6,935.18	1.51	6,913.93	21.25	ND	NA	12.75	6,922.43	NA	8 - 18
		11/14/19	4.00	6,933.67	6,935.18	1.51	6,913.93	21.25	ND	NA	12.85	6,922.33	NA	8 - 18
		11/15/19	4.00	6,933.67	6,935.18	1.51	6,913.93	21.25	ND	NA	12.80	6,922.38	NA	8 - 18
		11/19/19	4.00	6,933.67	6,935.18	1.51	6,913.93	21.25	ND	NA	12.71	6,922.47	NA	8 - 18
		11/21/19	4.00	6,933.67	6,935.18	1.51	6,913.93	21.25	ND	NA	12.75	6,922.43	NA	8 - 18
		12/02/19	4.00	6,933.67	6,935.18	1.51	6,913.93	21.25	ND	NA	12.40	6,922.78	NA	8 - 18

TABLE 9.2
5-YEAR HISTORICAL DTB/DTW MEASUREMENTS FOR WELLS MKTF-01 THRU MKTF-50

Date of Installation	Well ID Number	Inspection or Sample Date	Casing Diameter (Inch)	Ground Level Elevation (ft)	Well Casing Rim Elevation (ft)	Stick-up length (ft)	Well Casing Bottom Elevation (ft)	Total Well Depth (ft)	Depth to SPH (ft)	SPH Column Thickness (ft)	Depth to Water (ft)	Ground-water Elevation (ft)	Corrected Water Table[1] Elevation (ft)	Screened Interval Depth Top to Bottom (ft)
11/12/13	MKTF-14	03/12/15	4.00	6,925.65	6,928.02	2.37	6,910.56	17.46	7.60	0.55	8.15	6,919.87	6,920.31	4 - 14
		06/09/15	4.00	6,925.65	6,928.02	2.37	6,910.56	17.46	8.00	0.37	8.37	6,919.65	6,919.95	4 - 14
		08/21/15	4.00	6,925.65	6,928.02	2.37	6,910.56	17.46	7.61	0.42	8.03	6,919.99	6,920.33	4 - 14
		11/03/15	4.00	6,925.65	6,928.02	2.37	6,910.56	17.46	7.71	0.39	8.10	6,919.92	6,920.23	4 - 14
		03/12/16	4.00	6,925.65	6,928.02	2.37	6,910.56	17.46	7.60	0.55	8.15	6,919.87	6,920.31	4 - 14
		06/10/16	4.00	6,925.65	6,928.02	2.37	6,910.56	17.46	7.13	2.33	9.46	6,918.56	6,920.42	4 - 14
		09/10/16	4.00	6,925.65	6,928.02	2.37	6,910.56	17.46	7.31	1.69	9.00	6,919.02	6,920.37	4 - 14
		11/03/16	4.00	6,925.65	6,928.02	2.37	6,910.56	17.46	7.71	0.39	8.10	6,919.92	6,920.23	4 - 14
		03/08/17	4.00	6,925.65	6,928.02	2.37	6,910.56	17.46	5.77	0.98	6.75	6,921.27	6,922.05	4 - 14
		06/07/17	4.00	6,925.65	6,928.02	2.37	6,910.56	17.46	6.68	0.84	7.52	6,920.50	6,921.17	4 - 14
		10/03/17	4.00	6,925.65	6,928.02	2.37	6,910.56	17.46	5.70	0.41	6.11	6,921.91	6,922.24	4 - 14
		11/27/17	4.00	6,925.65	6,928.02	2.37	6,910.56	17.46	6.56	0.37	6.93	6,921.09	6,921.39	4 - 14
		02/07/18	4.00	6,925.65	6,928.02	2.37	6,910.56	17.46	6.98	0.41	7.39	6,920.63	6,920.96	4 - 14
		04/26/18	4.00	6,925.65	6,928.02	2.37	6,910.59	17.43	7.01	0.38	7.39	6,920.63	6,920.93	4 - 14
		08/15/18	4.00	6,925.65	6,928.02	2.37	6,910.57	17.45	6.95	0.35	7.30	6,920.72	6,921.00	4 - 14
		11/27/18	4.00	6,925.65	6,928.02	2.37	6,910.56	17.46	6.26	0.39	6.65	6,921.37	6,921.68	4 - 14
		03/25/19	4.00	6,925.65	6,928.02	2.37	6,910.56	17.46	3.89	0.36	4.25	6,923.77	6,924.06	4 - 14
		05/09/19	4.00	6,925.65	6,928.02	2.37	6,910.56	17.46	4.65	0.39	5.04	6,922.98	6,923.29	4 - 14
		08/20/19	4.00	6,925.65	6,928.02	2.37	6,910.57	17.45	5.64	0.28	5.92	6,922.10	6,922.32	4 - 14
		10/28/19	4.00	6,925.65	6,928.02	2.37	6,910.56	17.46	6.02	0.37	6.39	6,921.63	6,921.93	4 - 14

TABLE 9.2
5-YEAR HISTORICAL DTB/DTW MEASUREMENTS FOR WELLS MKTF-01 THRU MKTF-50

Date of Installation	Well ID Number	Inspection or Sample Date	Casing Diameter (Inch)	Ground Level Elevation (ft)	Well Casing Rim Elevation (ft)	Stick-up length (ft)	Well Casing Bottom Elevation (ft)	Total Well Depth (ft)	Depth to SPH (ft)	SPH Column Thickness (ft)	Depth to Water (ft)	Ground-water Elevation (ft)	Corrected Water Table[1] Elevation (ft)	Screened Interval Depth Top to Bottom (ft)
10/29/13	MKTF-15	03/16/15	2.00	6,943.74	6,943.48	-0.26	6,924.00	19.48	13.17	0.75	13.92	6,929.56	6,930.16	9 - 19
		06/04/15	2.00	6,943.74	6,943.48	-0.26	6,924.00	19.48	13.20	0.58	13.78	6,929.70	6,930.16	9 - 19
		08/18/15	2.00	6,943.74	6,943.48	-0.26	6,924.00	19.48	13.09	0.25	13.34	6,930.14	6,930.34	9 - 19
		11/03/15	2.00	6,943.74	6,943.48	-0.26	6,924.00	19.48	12.90	0.65	13.55	6,929.93	6,930.45	9 - 19
		03/16/16	2.00	6,943.74	6,943.48	-0.26	6,924.00	19.48	13.17	0.75	13.92	6,929.56	6,930.16	9 - 19
		06/09/16	2.00	6,943.74	6,943.48	-0.26	6,924.00	19.48	12.60	0.22	12.82	6,930.66	6,930.84	9 - 19
		09/11/16	2.00	6,943.74	6,943.48	-0.26	6,924.00	19.48	ND	NA	13.00	6,930.48	NA	9 - 19
		11/03/16	2.00	6,943.74	6,943.48	-0.26	6,924.00	19.48	12.90	0.65	13.55	6,929.93	6,930.45	9 - 19
		03/02/17	2.00	6,943.74	6,943.48	-0.26	6,924.00	19.48	ND	NA	12.15	6,931.33	NA	9 - 19
		06/07/17	2.00	6,943.74	6,943.48	-0.26	6,924.00	19.48	ND	NA	11.93	6,931.55	NA	9 - 19
		09/26/17	2.00	6,943.74	6,943.48	-0.26	6,924.00	19.48	12.00	0.10	12.10	6,931.38	6,931.46	9 - 19
		11/29/17	2.00	6,943.74	6,943.48	-0.26	6,924.00	19.48	ND	NA	12.13	6,931.35	NA	9 - 19
		02/08/18	2.00	6,943.74	6,943.48	-0.26	6,924.00	19.48	12.40	0.07	12.47	6,931.01	6,931.07	9 - 19
		04/25/18	2.00	6,943.74	6,943.48	-0.26	6,924.08	19.40	ND	NA	12.20	6,931.28	NA	9 - 19
		08/16/18	2.00	6,943.74	6,943.48	-0.26	6,923.98	19.50	ND	NA	12.40	6,931.08	NA	9 - 19
		11/19/18	2.00	6,943.74	6,943.48	-0.26	6,924.00	19.48	12.57	0.13	12.70	6,930.78	6,930.88	9 - 19
		03/25/19	2.00	6,943.74	6,943.48	-0.26	6,924.00	19.48	10.98	0.02	11.00	6,932.48	6,932.50	9 - 19
		05/13/19	2.00	6,943.74	6,943.48	-0.26	6,924.00	19.48	ND	NA	11.59	6,931.89	NA	9 - 19
		08/21/19	2.00	6,943.74	6,943.48	-0.26	6,923.98	19.50	12.02	0.01	12.03	6,931.45	NA	9 - 19
		10/30/19	2.00	6,943.74	6,943.48	-0.26	6,924.00	19.48	12.65	0.05	12.70	6,930.78	6,930.82	9 - 19

TABLE 9.2
5-YEAR HISTORICAL DTB/DTW MEASUREMENTS FOR WELLS MKTF-01 THRU MKTF-50

Date of Installation	Well ID Number	Inspection or Sample Date	Casing Diameter (Inch)	Ground Level Elevation (ft)	Well Casing Rim Elevation (ft)	Stick-up length (ft)	Well Casing Bottom Elevation (ft)	Total Well Depth (ft)	Depth to SPH (ft)	SPH Column Thickness (ft)	Depth to Water (ft)	Ground-water Elevation (ft)	Corrected Water Table[1] Elevation (ft)	Screened Interval Depth Top to Bottom (ft)
11/07/13	MKTF-16	03/16/15	2.00	6,951.00	6,950.58	-0.42	6,936.48	14.10	ND	NA	10.93	6,939.65	NA	4 - 14
		06/08/15	2.00	6,951.00	6,950.58	-0.42	6,936.48	14.10	ND	NA	8.86	6,941.72	NA	4 - 14
		08/23/15	2.00	6,951.00	6,950.58	-0.42	6,936.48	14.10	ND	NA	9.79	6,940.79	NA	4 - 14
		11/03/15	2.00	6,951.00	6,950.58	-0.42	6,936.48	14.10	ND	NA	9.49	6,941.09	NA	4 - 14
		02/29/16	2.00	6,951.00	6,950.58	-0.42	6,936.48	14.10	ND	NA	9.90	6,940.68	NA	4 - 14
		06/08/16	2.00	6,951.00	6,950.58	-0.42	6,936.48	14.10	ND	NA	9.58	6,941.00	NA	4 - 14
		09/11/16	2.00	6,951.00	6,950.58	-0.42	6,936.48	14.10	ND	NA	9.65	6,940.93	NA	4 - 14
		11/03/16	2.00	6,951.00	6,950.58	-0.42	6,936.48	14.10	ND	NA	9.49	6,941.09	NA	4 - 14
		03/14/17	2.00	6,951.00	6,950.58	-0.42	6,936.48	14.10	ND	NA	7.45	6,943.13	NA	4 - 14
		06/07/17	2.00	6,951.00	6,950.58	-0.42	6,936.48	14.10	ND	NA	7.66	6,942.92	NA	4 - 14
		09/26/17	2.00	6,951.00	6,950.58	-0.42	6,936.48	14.10	ND	NA	8.00	6,942.58	NA	4 - 14
		11/28/17	2.00	6,951.00	6,950.58	-0.42	6,936.48	14.10	ND	NA	8.22	6,942.36	NA	4 - 14
		02/14/18	2.00	6,951.00	6,950.58	-0.42	6,936.48	14.10	ND	NA	8.80	6,941.78	NA	4 - 14
		04/25/18	2.00	6,951.00	6,950.58	-0.42	6,936.62	13.96	ND	NA	8.35	6,942.23	NA	4 - 14
		08/16/18	2.00	6,951.00	6,950.58	-0.42	6,936.50	14.08	ND	NA	8.55	6,942.03	NA	4 - 14
		11/29/18	2.00	6,951.00	6,950.58	-0.42	6,936.48	14.10	ND	NA	9.54	6,941.04	NA	4 - 14
		02/20/19	2.00	6,951.00	6,950.58	-0.42	6,936.48	14.10	ND	NA	7.05	6,943.53	NA	4 - 14
		05/13/19	2.00	6,951.00	6,950.58	-0.42	6,936.48	14.10	ND	NA	8.35	6,942.23	NA	4 - 14
		08/21/19	2.00	6,951.00	6,950.58	-0.42	6,936.50	14.08	ND	NA	9.22	6,941.36	NA	4 - 14
		10/30/19	2.00	6,951.00	6,950.58	-0.42	6,936.48	14.10	ND	NA	9.89	6,940.69	NA	4 - 14

TABLE 9.2
5-YEAR HISTORICAL DTB/DTW MEASUREMENTS FOR WELLS MKTF-01 THRU MKTF-50

Date of Installation	Well ID Number	Inspection or Sample Date	Casing Diameter (Inch)	Ground Level Elevation (ft)	Well Casing Rim Elevation (ft)	Stick-up length (ft)	Well Casing Bottom Elevation (ft)	Total Well Depth (ft)	Depth to SPH (ft)	SPH Column Thickness (ft)	Depth to Water (ft)	Ground-water Elevation (ft)	Corrected Water Table[1] Elevation (ft)	Screened Interval Depth Top to Bottom (ft)
11/14/13	MKTF-17	03/12/15	2.00	6,945.79	6,945.76	-0.03	6,921.65	24.11	ND	NA	12.81	6,932.95	NA	14 - 24
		06/08/15	2.00	6,945.79	6,945.76	-0.03	6,921.65	24.11	ND	NA	13.40	6,932.36	NA	14 - 24
		08/18/15	2.00	6,945.79	6,945.76	-0.03	6,921.65	24.11	ND	NA	11.98	6,933.78	NA	14 - 24
		11/03/15	2.00	6,945.79	6,945.76	-0.03	6,921.65	24.11	ND	NA	12.34	6,933.42	NA	14 - 24
		02/25/16	2.00	6,945.79	6,945.76	-0.03	6,921.65	24.11	ND	NA	11.82	6,933.94	NA	14 - 24
		06/10/16	2.00	6,945.79	6,945.76	-0.03	6,921.65	24.11	ND	NA	11.30	6,934.46	NA	14 - 24
		09/12/16	2.00	6,945.79	6,945.76	-0.03	6,921.65	24.11	ND	NA	12.40	6,933.36	NA	14 - 24
		11/03/16	2.00	6,945.79	6,945.76	-0.03	6,921.65	24.11	ND	NA	12.34	6,933.42	NA	14 - 24
		03/08/17	2.00	6,945.79	6,945.76	-0.03	6,921.65	24.11	ND	NA	8.20	6,937.56	NA	14 - 24
		06/14/17	2.00	6,945.79	6,945.76	-0.03	6,921.65	24.11	ND	NA	9.98	6,935.78	NA	14 - 24
		09/26/17	2.00	6,945.79	6,945.76	-0.03	6,921.65	24.11	ND	NA	9.33	6,936.43	NA	14 - 24
		11/30/17	2.00	6,945.79	6,945.76	-0.03	6,921.11	24.65	ND	NA	13.68	6,932.08	NA	14 - 24
		02/15/18	2.00	6,945.79	6,945.76	-0.03	6,921.08	24.68	ND	NA	11.65	6,934.11	NA	14 - 24
		04/26/18	2.00	6,945.79	6,945.76	-0.03	6,921.21	24.55	ND	NA	12.28	6,933.48	NA	14 - 24
		08/15/18	2.00	6,945.79	6,945.76	-0.03	6,921.08	24.68	ND	NA	12.50	6,933.26	NA	14 - 24
		11/27/18	2.00	6,945.79	6,945.76	-0.03	6,921.11	24.65	ND	NA	13.65	6,932.11	NA	14 - 24
		03/25/19	2.00	6,945.79	6,945.76	-0.03	6,921.65	24.11	ND	NA	10.70	6,935.06	NA	14 - 24
		05/09/19	2.00	6,945.79	6,945.76	-0.03	6,921.65	24.11	ND	NA	14.05	6,931.71	NA	14 - 24
		08/19/19	2.00	6,945.79	6,945.76	-0.03	6,921.08	24.68	ND	NA	10.79	6,934.97	NA	14 - 24
		10/28/19	2.00	6,945.79	6,945.76	-0.03	6,921.11	24.65	ND	NA	9.00	6,936.76	NA	14 - 24
		10/29/19	2.00	6,945.79	6,945.76	-0.03	6,921.11	24.65	ND	NA	15.20	6,930.56	NA	14 - 24
		11/12/19	2.00	6,945.79	6,945.76	-0.03	6,921.11	24.65	ND	NA	11.86	6,933.90	NA	14 - 24
		11/19/19	2.00	6,945.79	6,945.76	-0.03	6,921.11	24.65	12.35	1.60	13.95	6,931.81	6,933.09	14 - 24
		11/21/19	2.00	6,945.79	6,945.76	-0.03	6,921.11	24.65	12.42	2.88	15.30	6,930.46	6,932.76	14 - 24
		12/02/19	2.00	6,945.79	6,945.76	-0.03	6,921.11	24.65	13.17	4.88	18.05	6,927.71	6,931.61	14 - 24

TABLE 9.2
5-YEAR HISTORICAL DTB/DTW MEASUREMENTS FOR WELLS MKTF-01 THRU MKTF-50

Date of Installation	Well ID Number	Inspection or Sample Date	Casing Diameter (Inch)	Ground Level Elevation (ft)	Well Casing Rim Elevation (ft)	Stick-up length (ft)	Well Casing Bottom Elevation (ft)	Total Well Depth (ft)	Depth to SPH (ft)	SPH Column Thickness (ft)	Depth to Water (ft)	Ground-water Elevation (ft)	Corrected Water Table[1] Elevation (ft)	Screened Interval Depth Top to Bottom (ft)
11/15/13	MKTF-18	03/17/15	2.00	6,950.97	6,950.65	-0.32	6,925.27	25.38	ND	NA	8.92	6,941.73	NA	17 - 27
		06/08/15	2.00	6,950.97	6,950.65	-0.32	6,925.27	25.38	ND	NA	8.86	6,941.79	NA	17 - 27
		08/18/15	2.00	6,950.97	6,950.65	-0.32	6,925.27	25.38	ND	NA	8.83	6,941.82	NA	17 - 27
		11/03/15	2.00	6,950.97	6,950.65	-0.32	6,925.27	25.38	ND	NA	8.52	6,942.13	NA	17 - 27
		02/26/16	2.00	6,950.97	6,950.65	-0.32	6,925.27	25.38	ND	NA	8.34	6,942.31	NA	17 - 27
		06/10/16	2.00	6,950.97	6,950.65	-0.32	6,925.27	25.38	ND	NA	11.85	6,938.80	NA	17 - 27
		09/12/16	2.00	6,950.97	6,950.65	-0.32	6,925.27	25.38	ND	NA	7.75	6,942.90	NA	17 - 27
		11/03/16	2.00	6,950.97	6,950.65	-0.32	6,925.27	25.38	ND	NA	8.52	6,942.13	NA	17 - 27
		03/01/17	2.00	6,950.97	6,950.65	-0.32	6,925.27	25.38	ND	NA	7.81	6,942.84	NA	17 - 27
		06/14/17	2.00	6,950.97	6,950.65	-0.32	6,925.27	25.38	ND	NA	6.30	6,944.35	NA	17 - 27
		09/27/17	2.00	6,950.97	6,950.65	-0.32	6,925.27	25.38	6.35	0.02	6.37	6,944.28	6,944.30	17 - 27
		11/30/17	2.00	6,950.97	6,950.65	-0.32	6,925.27	25.38	6.29	0.01	6.30	6,944.35	6,944.36	17 - 27
		02/15/18	2.00	6,950.97	6,950.65	-0.32	6,923.85	26.80	ND	NA	6.47	6,944.18	NA	17 - 27
		04/26/18	2.00	6,950.97	6,950.65	-0.32	6,923.95	26.70	ND	NA	8.22	6,942.43	NA	17 - 27
		08/16/18	2.00	6,950.97	6,950.65	-0.32	6,923.20	27.45	ND	NA	7.12	6,943.53	NA	17 - 27
		11/27/18	2.00	6,950.97	6,950.65	-0.32	6,925.27	25.38	ND	NA	7.94	6,942.71	NA	17 - 27
		03/25/19	2.00	6,950.97	6,950.65	-0.32	6,925.27	25.38	ND	NA	7.32	6,943.33	NA	17 - 27
		05/16/19	2.00	6,950.97	6,950.65	-0.32	6,925.27	25.38	ND	NA	7.54	6,943.11	NA	17 - 27
		08/19/19	2.00	6,950.97	6,950.65	-0.32	6,923.20	27.45	7.71	0.01	7.72	6,942.93	6,942.94	17 - 27
		10/28/19	2.00	6,950.97	6,950.65	-0.32	6,925.27	25.38	ND	NA	7.79	6,942.86	NA	17 - 27
		10/29/19	2.00	6,950.97	6,950.65	-0.32	6,925.27	25.38	ND	NA	8.30	6,942.35	NA	17 - 27
		11/12/19	2.00	6,950.97	6,950.65	-0.32	6,925.27	25.38	ND	NA	8.19	6,942.46	NA	17 - 27

TABLE 9.2
5-YEAR HISTORICAL DTB/DTW MEASUREMENTS FOR WELLS MKTF-01 THRU MKTF-50

Date of Installation	Well ID Number	Inspection or Sample Date	Casing Diameter (Inch)	Ground Level Elevation (ft)	Well Casing Rim Elevation (ft)	Stick-up length (ft)	Well Casing Bottom Elevation (ft)	Total Well Depth (ft)	Depth to SPH (ft)	SPH Column Thickness (ft)	Depth to Water (ft)	Ground-water Elevation (ft)	Corrected Water Table[1] Elevation (ft)	Screened Interval Depth Top to Bottom (ft)
11/05/13	MKTF-19	03/12/15	2.00	6,944.89	6,944.67	-0.22	6,927.20	17.47	ND	NA	11.91	6,932.76	NA	10 - 20
		06/08/15	2.00	6,944.89	6,944.67	-0.22	6,927.20	17.47	ND	NA	12.47	6,932.20	NA	10 - 20
		08/18/15	2.00	6,944.89	6,944.67	-0.22	6,927.20	17.47	ND	NA	13.76	6,930.91	NA	10 - 20
		11/03/15	2.00	6,944.89	6,944.67	-0.22	6,927.20	17.47	ND	NA	12.95	6,931.72	NA	10 - 20
		02/25/16	2.00	6,944.89	6,944.67	-0.22	6,927.20	17.47	ND	NA	12.62	6,932.05	NA	10 - 20
		06/10/16	2.00	6,944.89	6,944.67	-0.22	6,927.20	17.47	ND	NA	11.90	6,932.77	NA	10 - 20
		09/12/16	2.00	6,944.89	6,944.67	-0.22	6,927.20	17.47	ND	NA	11.25	6,933.42	NA	10 - 20
		11/03/16	2.00	6,944.89	6,944.67	-0.22	6,927.20	17.47	ND	NA	12.84	6,931.83	NA	10 - 20
		03/08/17	2.00	6,944.89	6,944.67	-0.22	6,927.20	17.47	ND	NA	9.82	6,934.85	NA	10 - 20
		06/14/17	2.00	6,944.89	6,944.67	-0.22	6,927.20	17.47	ND	NA	10.58	6,934.09	NA	10 - 20
		09/26/17	2.00	6,944.89	6,944.67	-0.22	6,927.20	17.47	ND	NA	11.00	6,933.67	NA	10 - 20
		11/30/17	2.00	6,944.89	6,944.67	-0.22	6,926.47	18.20	ND	NA	11.70	6,932.97	NA	10 - 20
		02/15/18	2.00	6,944.89	6,944.67	-0.22	6,926.22	18.45	ND	NA	12.00	6,932.67	NA	10 - 20
		04/26/18	2.00	6,944.89	6,944.67	-0.22	6,926.48	18.19	ND	NA	12.05	6,932.62	NA	10 - 20
		08/15/18	2.00	6,944.89	6,944.67	-0.22	6,925.37	19.30	ND	NA	12.20	6,932.47	NA	10 - 20
		11/27/18	2.00	6,944.89	6,944.67	-0.22	6,926.47	18.20	ND	NA	12.37	6,932.30	NA	10 - 20
		03/25/19	2.00	6,944.89	6,944.67	-0.22	6,927.20	17.47	ND	NA	11.40	6,933.27	NA	10 - 20
		05/09/19	2.00	6,944.89	6,944.67	-0.22	6,927.20	17.47	ND	NA	11.31	6,933.36	NA	10 - 20
		08/19/19	2.00	6,944.89	6,944.67	-0.22	6,925.37	19.30	ND	NA	11.06	6,933.61	NA	10 - 20
		10/28/19	2.00	6,944.89	6,944.67	-0.22	6,926.47	18.20	ND	NA	10.91	6,933.76	NA	10 - 20
		10/29/19	2.00	6,944.89	6,944.67	-0.22	6,926.47	18.20	ND	NA	15.76	6,928.91	NA	10 - 20
		11/12/19	2.00	6,944.89	6,944.67	-0.22	6,926.47	18.20	ND	NA	10.85	6,933.82	NA	10 - 20
		11/19/19	2.00	6,944.89	6,944.67	-0.22	6,926.47	18.20	ND	NA	10.90	6,933.77	NA	10 - 20
		11/21/19	2.00	6,944.89	6,944.67	-0.22	6,926.47	18.20	ND	NA	11.05	6,933.62	NA	10 - 20
		12/02/19	2.00	6,944.89	6,944.67	-0.22	6,926.47	18.20	11.63	0.87	12.50	6,932.17	6,932.87	10 - 20

TABLE 9.2
5-YEAR HISTORICAL DTB/DTW MEASUREMENTS FOR WELLS MKTF-01 THRU MKTF-50

Date of Installation	Well ID Number	Inspection or Sample Date	Casing Diameter (Inch)	Ground Level Elevation (ft)	Well Casing Rim Elevation (ft)	Stick-up length (ft)	Well Casing Bottom Elevation (ft)	Total Well Depth (ft)	Depth to SPH (ft)	SPH Column Thickness (ft)	Depth to Water (ft)	Ground-water Elevation (ft)	Corrected Water Table[1] Elevation (ft)	Screened Interval Depth Top to Bottom (ft)
02/10/14	MKTF-20	03/16/15	4.00	6,951.89	6,951.78	-0.11	6,941.89	9.89	ND	NA	7.26	6,944.52	NA	2 - 10
		06/08/15	4.00	6,951.89	6,951.78	-0.11	6,941.89	9.89	ND	NA	7.89	6,943.89	NA	2 - 10
		08/23/15	4.00	6,951.89	6,951.78	-0.11	6,941.89	9.89	ND	NA	7.79	6,943.99	NA	2 - 10
		11/09/15	4.00	6,951.89	6,951.78	-0.11	6,941.89	9.89	ND	NA	7.78	6,944.00	NA	2 - 10
		02/29/16	4.00	6,951.89	6,951.78	-0.11	6,941.89	9.89	ND	NA	7.81	6,943.97	NA	2 - 10
		06/08/16	4.00	6,951.89	6,951.78	-0.11	6,941.89	9.89	ND	NA	7.23	6,944.55	NA	2 - 10
		09/11/16	4.00	6,951.89	6,951.78	-0.11	6,941.89	9.89	ND	NA	7.65	6,944.13	NA	2 - 10
		11/09/16	4.00	6,951.89	6,951.78	-0.11	6,941.89	9.89	ND	NA	7.78	6,944.00	NA	2 - 10
		03/14/17	4.00	6,951.89	6,951.78	-0.11	6,941.89	9.89	ND	NA	5.70	6,946.08	NA	2 - 10
		06/12/17	4.00	6,951.89	6,951.78	-0.11	6,941.89	9.89	ND	NA	5.57	6,946.21	NA	2 - 10
		09/26/17	4.00	6,951.89	6,951.78	-0.11	6,941.89	9.89	ND	NA	6.23	6,945.55	NA	2 - 10
		11/28/17	4.00	6,951.89	6,951.78	-0.11	6,942.20	9.58	ND	NA	6.53	6,945.25	NA	2 - 10
		02/14/18	4.00	6,951.89	6,951.78	-0.11	6,942.23	9.55	ND	NA	7.45	6,944.33	NA	2 - 10
		04/25/18	4.00	6,951.89	6,951.78	-0.11	6,942.28	9.50	ND	NA	6.90	6,944.88	NA	2 - 10
		08/16/18	4.00	6,951.89	6,951.78	-0.11	6,942.22	9.56	ND	NA	7.20	6,944.58	NA	2 - 10
		11/29/18	4.00	6,951.89	6,951.78	-0.11	6,942.20	9.58	ND	NA	7.52	6,944.26	NA	2 - 10
		02/20/19	4.00	6,951.89	6,951.78	-0.11	6,942.95	8.83	ND	NA	6.29	6,945.49	NA	2 - 10
		05/13/19	4.00	6,951.89	6,951.78	-0.11	6,942.95	8.83	ND	NA	7.14	6,944.64	NA	2 - 10
		08/20/19	4.00	6,951.89	6,951.78	-0.11	6,942.95	8.83	ND	NA	8.03	6,943.75	NA	2 - 10
		11/04/19	4.00	6,951.89	6,951.78	-0.11	6,942.95	8.83	ND	NA	7.68	6,944.10	NA	2 - 10

TABLE 9.2
5-YEAR HISTORICAL DTB/DTW MEASUREMENTS FOR WELLS MKTF-01 THRU MKTF-50

Date of Installation	Well ID Number	Inspection or Sample Date	Casing Diameter (Inch)	Ground Level Elevation (ft)	Well Casing Rim Elevation (ft)	Stick-up length (ft)	Well Casing Bottom Elevation (ft)	Total Well Depth (ft)	Depth to SPH (ft)	SPH Column Thickness (ft)	Depth to Water (ft)	Ground-water Elevation (ft)	Corrected Water Table[1] Elevation (ft)	Screened Interval Depth Top to Bottom (ft)
02/10/14	MKTF-21	03/16/15	4.00	6,952.68	6,952.57	-0.11	6,942.68	9.89	ND	NA	7.62	6,944.95	NA	2 - 10
		06/10/15	4.00	6,952.68	6,952.57	-0.11	6,942.68	9.89	ND	NA	7.96	6,944.61	NA	2 - 10
		08/23/15	4.00	6,952.68	6,952.57	-0.11	6,942.68	9.89	ND	NA	7.62	6,944.95	NA	2 - 10
		11/09/15	4.00	6,952.68	6,952.57	-0.11	6,942.68	9.89	ND	NA	7.46	6,945.11	NA	2 - 10
		02/29/16	4.00	6,952.68	6,952.57	-0.11	6,942.68	9.89	ND	NA	7.24	6,945.33	NA	2 - 10
		06/08/16	4.00	6,952.68	6,952.57	-0.11	6,942.68	9.89	ND	NA	6.98	6,945.59	NA	2 - 10
		09/11/16	4.00	6,952.68	6,952.57	-0.11	6,942.68	9.89	ND	NA	7.62	6,944.95	NA	2 - 10
		11/09/16	4.00	6,952.68	6,952.57	-0.11	6,942.68	9.89	ND	NA	7.46	6,945.11	NA	2 - 10
		03/14/17	4.00	6,952.68	6,952.57	-0.11	6,942.68	9.89	ND	NA	5.50	6,947.07	NA	2 - 10
		06/21/17	4.00	6,952.68	6,952.57	-0.11	6,942.68	9.89	ND	NA	5.09	6,947.48	NA	2 - 10
		09/26/17	4.00	6,952.68	6,952.57	-0.11	6,942.68	9.89	ND	NA	5.69	6,946.88	NA	2 - 10
		11/28/17	4.00	6,952.68	6,952.57	-0.11	6,943.76	8.81	ND	NA	6.25	6,946.32	NA	2 - 10
		02/14/18	4.00	6,952.68	6,952.57	-0.11	6,943.77	8.80	ND	NA	6.88	6,945.69	NA	2 - 10
		04/25/18	4.00	6,952.68	6,952.57	-0.11	6,943.82	8.75	ND	NA	6.32	6,946.25	NA	2 - 10
		08/16/18	4.00	6,952.68	6,952.57	-0.11	6,943.77	8.80	ND	NA	6.05	6,946.52	NA	2 - 10
		11/29/18	4.00	6,952.68	6,952.57	-0.11	6,943.76	8.81	ND	NA	7.52	6,945.05	NA	2 - 10
		02/20/19	4.00	6,952.68	6,952.57	-0.11	6,943.76	8.81	ND	NA	5.62	6,946.95	NA	2 - 10
		05/13/19	4.00	6,952.68	6,952.57	-0.11	6,943.76	8.81	ND	NA	6.70	6,945.87	NA	2 - 10
		08/20/19	4.00	6,952.68	6,952.57	-0.11	6,943.76	8.81	ND	NA	7.22	6,945.35	NA	2 - 10
		11/04/19	4.00	6,952.68	6,952.57	-0.11	6,943.76	8.81	ND	NA	8.32	6,944.25	NA	2 - 10

TABLE 9.2
5-YEAR HISTORICAL DTB/DTW MEASUREMENTS FOR WELLS MKTF-01 THRU MKTF-50

Date of Installation	Well ID Number	Inspection or Sample Date	Casing Diameter (Inch)	Ground Level Elevation (ft)	Well Casing Rim Elevation (ft)	Stick-up length (ft)	Well Casing Bottom Elevation (ft)	Total Well Depth (ft)	Depth to SPH (ft)	SPH Column Thickness (ft)	Depth to Water (ft)	Ground-water Elevation (ft)	Corrected Water Table[1] Elevation (ft)	Screened Interval Depth Top to Bottom (ft)
11/08/13	MKTF-22	03/12/15	2.00	6,939.76	6,942.31	2.55	6,907.06	35.25	ND	NA	26.07	6,916.24	NA	22 - 32
		06/09/15	2.00	6,939.76	6,942.31	2.55	6,907.06	35.25	ND	NA	26.18	6,916.13	NA	22 - 32
		08/20/15	2.00	6,939.76	6,942.31	2.55	6,906.06	36.25	ND	NA	26.20	6,916.11	NA	22 - 32
		11/09/15	2.00	6,939.76	6,942.31	2.55	6,907.06	35.25	ND	NA	26.05	6,916.26	NA	22 - 32
		02/25/16	2.00	6,939.76	6,942.31	2.55	6,907.06	35.25	ND	NA	26.13	6,916.18	NA	22 - 32
		06/10/16	2.00	6,939.76	6,942.31	2.55	6,907.06	35.25	ND	NA	26.06	6,916.25	NA	22 - 32
		09/10/16	2.00	6,939.76	6,942.31	2.55	6,906.06	36.25	ND	NA	26.13	6,916.18	NA	22 - 32
		11/09/16	2.00	6,939.76	6,942.31	2.55	6,907.06	35.25	ND	NA	26.05	6,916.26	NA	22 - 32
		03/08/17	2.00	6,939.76	6,942.31	2.55	6,907.06	35.25	ND	NA	25.10	6,917.21	NA	22 - 32
		06/07/17	2.00	6,939.76	6,942.31	2.55	6,907.06	35.25	ND	NA	25.31	6,917.00	NA	22 - 32
		10/03/17	2.00	6,939.76	6,942.31	2.55	6,907.06	35.25	ND	NA	25.19	6,917.12	NA	22 - 32
		11/27/17	2.00	6,939.76	6,942.31	2.55	6,906.71	35.60	ND	NA	25.18	6,917.13	NA	22 - 32
		02/07/18	2.00	6,939.76	6,942.31	2.55	6,906.71	35.60	ND	NA	25.50	6,916.81	NA	22 - 32
		04/26/18	2.00	6,939.76	6,942.31	2.55	6,906.80	35.51	ND	NA	25.40	6,916.91	NA	22 - 32
		08/15/18	2.00	6,939.76	6,942.31	2.55	6,906.69	35.62	ND	NA	25.80	6,916.51	NA	22 - 32
		11/27/18	2.00	6,939.76	6,942.31	2.55	6,906.71	35.60	ND	NA	25.57	6,916.74	NA	22 - 32
		03/25/19	2.00	6,939.76	6,942.31	2.55	6,907.06	35.25	ND	NA	24.43	6,917.88	NA	22 - 32
		05/09/19	2.00	6,939.76	6,942.31	2.55	6,907.06	35.25	ND	NA	24.64	6,917.67	NA	22 - 32
		08/20/19	2.00	6,939.76	6,942.31	2.55	6,906.69	35.62	ND	NA	24.95	6,917.36	NA	22 - 32
		10/24/19	2.00	6,939.76	6,942.31	2.55	6,906.71	35.60	ND	NA	25.40	6,916.91	NA	22 - 32

TABLE 9.2
5-YEAR HISTORICAL DTB/DTW MEASUREMENTS FOR WELLS MKTF-01 THRU MKTF-50

Date of Installation	Well ID Number	Inspection or Sample Date	Casing Diameter (Inch)	Ground Level Elevation (ft)	Well Casing Rim Elevation (ft)	Stick-up length (ft)	Well Casing Bottom Elevation (ft)	Total Well Depth (ft)	Depth to SPH (ft)	SPH Column Thickness (ft)	Depth to Water (ft)	Ground-water Elevation (ft)	Corrected Water Table[1] Elevation (ft)	Screened Interval Depth Top to Bottom (ft)
11/04/13	MKTF-23	03/12/15	2.00	6,927.23	6,929.98	2.75	6,909.62	20.36	ND	NA	14.79	6,915.19	NA	7 - 17
		06/09/15	2.00	6,927.23	6,929.98	2.75	6,909.62	20.36	ND	NA	13.82	6,916.16	NA	7 - 17
		08/21/15	2.00	6,927.23	6,929.98	2.75	6,908.62	21.36	ND	NA	14.76	6,915.22	NA	7 - 17
		11/09/15	2.00	6,927.23	6,929.98	2.75	6,909.62	20.36	ND	NA	14.61	6,915.37	NA	7 - 17
		02/25/16	2.00	6,927.23	6,929.98	2.75	6,909.62	20.36	ND	NA	14.67	6,915.31	NA	7 - 17
		06/10/16	2.00	6,927.23	6,929.98	2.75	6,909.62	20.36	ND	NA	14.64	6,915.34	NA	7 - 17
		09/10/16	2.00	6,927.23	6,929.98	2.75	6,908.62	21.36	15.04	0.11	15.15	6,914.83	6,914.92	7 - 17
		11/09/16	2.00	6,927.23	6,929.98	2.75	6,909.62	20.36	ND	NA	14.61	6,915.37	NA	7 - 17
		03/08/17	2.00	6,927.23	6,929.98	2.75	6,909.62	20.36	ND	NA	14.20	6,915.78	NA	7 - 17
		06/07/17	2.00	6,927.23	6,929.98	2.75	6,909.62	20.36	14.20	0.70	14.90	6,915.08	6,915.64	7 - 17
		10/03/17	2.00	6,927.23	6,929.98	2.75	6,909.62	20.36	14.19	0.06	14.25	6,915.73	6,915.78	7 - 17
		11/27/17	2.00	6,927.23	6,929.98	2.75	6,909.62	20.36	13.93	0.01	13.94	6,916.04	6,916.05	7 - 17
		02/07/18	2.00	6,927.23	6,929.98	2.75	6,909.62	20.36	14.11	0.09	14.20	6,915.78	6,915.85	7 - 17
		04/26/18	2.00	6,927.23	6,929.98	2.75	6,909.71	20.27	14.07	0.02	14.09	6,915.89	6,915.91	7 - 17
		08/15/18	2.00	6,927.23	6,929.98	2.75	6,909.60	20.38	15.48	0.10	15.58	6,914.40	6,914.48	7 - 17
		11/27/18	2.00	6,927.23	6,929.98	2.75	6,909.62	20.36	14.20	0.04	14.24	6,915.74	6,915.77	7 - 17
		03/25/19	2.00	6,927.23	6,929.98	2.75	6,909.62	20.36	ND	ND	12.55	6,917.43	NA	7 - 17
		05/09/19	2.00	6,927.23	6,929.98	2.75	6,909.62	20.36	12.95	0.07	13.02	6,916.96	6,917.02	7 - 17
		08/20/19	2.00	6,927.23	6,929.98	2.75	6,909.60	20.38	13.47	0.03	13.50	6,916.48	6,916.50	7 - 17
		10/28/19	2.00	6,927.23	6,929.98	2.75	6,909.62	20.36	ND	NA	13.95	6,916.03	NA	7 - 17

TABLE 9.2
5-YEAR HISTORICAL DTB/DTW MEASUREMENTS FOR WELLS MKTF-01 THRU MKTF-50

Date of Installation	Well ID Number	Inspection or Sample Date	Casing Diameter (Inch)	Ground Level Elevation (ft)	Well Casing Rim Elevation (ft)	Stick-up length (ft)	Well Casing Bottom Elevation (ft)	Total Well Depth (ft)	Depth to SPH (ft)	SPH Column Thickness (ft)	Depth to Water (ft)	Ground-water Elevation (ft)	Corrected Water Table[1] Elevation (ft)	Screened Interval Depth Top to Bottom (ft)
10/29/13	MKTF-24	03/11/15	2.00	6,926.07	6,928.72	2.65	6,898.25	30.47	ND	NA	21.54	6,907.18	NA	18 - 28
		06/10/15	2.00	6,926.07	6,928.72	2.65	6,898.25	30.47	ND	NA	21.65	6,907.07	NA	18 - 28
		08/20/15	2.00	6,926.07	6,928.72	2.65	6,897.25	31.47	ND	NA	21.53	6,907.19	NA	18 - 28
		11/04/15	2.00	6,926.07	6,928.72	2.65	6,898.25	30.47	ND	NA	21.72	6,907.00	NA	18 - 28
		02/22/16	2.00	6,926.07	6,928.72	2.65	6,898.25	30.47	ND	NA	21.34	6,907.38	NA	18 - 28
		06/08/16	2.00	6,926.07	6,928.72	2.65	6,898.25	30.47	ND	NA	21.23	6,907.49	NA	18 - 28
		09/07/16	2.00	6,926.07	6,928.72	2.65	6,897.25	31.47	ND	NA	22.69	6,906.03	NA	18 - 28
		11/04/16	2.00	6,926.07	6,928.72	2.65	6,898.25	30.47	ND	NA	21.72	6,907.00	NA	18 - 28
		03/06/17	2.00	6,926.07	6,928.72	2.65	6,898.25	30.47	ND	NA	20.61	6,908.11	NA	18 - 28
		06/05/17	2.00	6,926.07	6,928.72	2.65	6,898.25	30.47	ND	NA	21.07	6,907.65	NA	18 - 28
		10/03/17	2.00	6,926.07	6,928.72	2.65	6,898.25	30.47	ND	NA	21.52	6,907.20	NA	18 - 28
		11/20/17	2.00	6,926.07	6,928.72	2.65	6,897.90	30.82	ND	NA	21.53	6,907.19	NA	18 - 28
		02/06/18	2.00	6,926.07	6,928.72	2.65	6,897.89	30.83	ND	NA	21.60	6,907.12	NA	18 - 28
		04/25/18	2.00	6,926.07	6,928.72	2.65	6,897.94	30.78	ND	NA	21.76	6,906.96	NA	18 - 28
		08/15/18	2.00	6,926.07	6,928.72	2.65	6,897.87	30.85	ND	NA	22.65	6,906.07	NA	18 - 28
		11/14/18	2.00	6,926.07	6,928.72	2.65	6,897.90	30.82	ND	NA	23.30	6,905.42	NA	18 - 28
		02/25/19	2.00	6,926.07	6,928.72	2.65	6,898.25	30.47	ND	NA	22.43	6,906.29	NA	18 - 28
		05/06/19	2.00	6,926.07	6,928.72	2.65	6,898.25	30.47	ND	NA	21.53	6,907.19	NA	18 - 28
		08/23/19	2.00	6,926.07	6,928.72	2.65	6,897.87	30.85	ND	NA	22.05	6,906.67	NA	18 - 28
		10/22/19	2.00	6,926.07	6,928.72	2.65	6,897.90	30.82	ND	NA	23.21	6,905.51	NA	18 - 28

TABLE 9.2
5-YEAR HISTORICAL DTB/DTW MEASUREMENTS FOR WELLS MKTF-01 THRU MKTF-50

Date of Installation	Well ID Number	Inspection or Sample Date	Casing Diameter (Inch)	Ground Level Elevation (ft)	Well Casing Rim Elevation (ft)	Stick-up length (ft)	Well Casing Bottom Elevation (ft)	Total Well Depth (ft)	Depth to SPH (ft)	SPH Column Thickness (ft)	Depth to Water (ft)	Ground-water Elevation (ft)	Corrected Water Table[1] Elevation (ft)	Screened Interval Depth Top to Bottom (ft)
10/30/13	MKTF-25	03/11/15	2.00	6,913.35	6,916.19	2.84	6,896.76	19.43	ND	NA	10.85	6,905.34	NA	6 - 16
		06/10/15	2.00	6,913.35	6,916.19	2.84	6,896.76	19.43	ND	NA	11.04	6,905.15	NA	6 - 16
		08/21/15	2.00	6,913.35	6,916.19	2.84	6,895.76	20.43	ND	NA	10.60	6,905.59	NA	6 - 16
		11/05/15	2.00	6,913.35	6,916.19	2.84	6,896.76	19.43	ND	NA	11.20	6,904.99	NA	6 - 16
		02/23/16	2.00	6,913.35	6,916.19	2.84	6,896.76	19.43	ND	NA	10.83	6,905.36	NA	6 - 16
		06/09/16	2.00	6,913.35	6,916.19	2.84	6,896.76	19.43	ND	NA	11.22	6,904.97	NA	6 - 16
		09/08/16	2.00	6,913.35	6,916.19	2.84	6,895.76	20.43	ND	NA	12.17	6,904.02	NA	6 - 16
		11/05/16	2.00	6,913.35	6,916.19	2.84	6,896.76	19.43	ND	NA	11.20	6,904.99	NA	6 - 16
		03/06/17	2.00	6,913.35	6,916.19	2.84	6,896.76	19.43	ND	NA	9.52	6,906.67	NA	6 - 16
		06/05/17	2.00	6,913.35	6,916.19	2.84	6,896.76	19.43	ND	NA	10.23	6,905.96	NA	6 - 16
		09/25/17	2.00	6,913.35	6,916.19	2.84	6,896.76	19.43	ND	NA	11.04	6,905.15	NA	6 - 16
		11/21/17	2.00	6,913.35	6,916.19	2.84	6,896.39	19.80	ND	NA	11.11	6,905.08	NA	6 - 16
		02/05/18	2.00	6,913.35	6,916.19	2.84	6,896.64	19.55	ND	NA	11.20	6,904.99	NA	6 - 16
		04/25/18	2.00	6,913.35	6,916.19	2.84	6,896.69	19.50	ND	NA	11.18	6,905.01	NA	6 - 16
		08/15/18	2.00	6,913.35	6,916.19	2.84	6,896.41	19.78	ND	NA	12.36	6,903.83	NA	6 - 16
		11/14/18	2.00	6,913.35	6,916.19	2.84	6,896.39	19.80	ND	NA	13.35	6,902.84	NA	6 - 16
		02/14/19	2.00	6,913.35	6,916.19	2.84	6,896.76	19.43	ND	NA	13.13	6,903.06	NA	6 - 16
		05/06/19	2.00	6,913.35	6,916.19	2.84	6,896.76	19.43	ND	NA	12.00	6,904.19	NA	6 - 16
		08/23/19	2.00	6,913.35	6,916.19	2.84	6,896.41	19.78	ND	NA	13.12	6,903.07	NA	6 - 16
		08/27/19	2.00	6,913.35	6,916.19	2.84	6,895.41	20.78	ND	NA	13.23	6,902.96	NA	7 - 16
		10/22/19	2.00	6,913.35	6,916.19	2.84	6,896.39	19.80	ND	NA	13.72	6,902.47	NA	6 - 16

TABLE 9.2
5-YEAR HISTORICAL DTB/DTW MEASUREMENTS FOR WELLS MKTF-01 THRU MKTF-50

Date of Installation	Well ID Number	Inspection or Sample Date	Casing Diameter (Inch)	Ground Level Elevation (ft)	Well Casing Rim Elevation (ft)	Stick-up length (ft)	Well Casing Bottom Elevation (ft)	Total Well Depth (ft)	Depth to SPH (ft)	SPH Column Thickness (ft)	Depth to Water (ft)	Ground-water Elevation (ft)	Corrected Water Table[1] Elevation (ft)	Screened Interval Depth Top to Bottom (ft)
10/30/13	MKTF-26	03/11/15	2.00	6,912.55	6,915.31	2.76	6,898.16	17.15	ND	NA	8.00	6,907.31	NA	4 - 14
		06/10/15	2.00	6,912.55	6,915.31	2.76	6,898.16	17.15	ND	NA	8.57	6,906.74	NA	4 - 14
		08/20/15	2.00	6,912.55	6,915.31	2.76	6,897.16	18.15	ND	NA	8.54	6,906.77	NA	4 - 14
		11/04/15	2.00	6,912.55	6,915.31	2.76	6,898.16	17.15	ND	NA	8.40	6,906.91	NA	4 - 14
		02/22/16	2.00	6,912.55	6,915.31	2.76	6,898.16	17.15	ND	NA	8.17	6,907.14	NA	4 - 14
		06/09/16	2.00	6,912.55	6,915.31	2.76	6,898.16	17.15	ND	NA	9.60	6,905.71	NA	4 - 14
		09/07/16	2.00	6,912.55	6,915.31	2.76	6,897.16	18.15	9.44	1.37	10.81	6,904.50	6,905.60	4 - 14
		11/04/16	2.00	6,912.55	6,915.31	2.76	6,898.16	17.15	ND	NA	8.40	6,906.91	NA	4 - 14
		03/06/17	2.00	6,912.55	6,915.31	2.76	6,898.16	17.15	7.44	0.75	8.19	6,907.12	6,907.72	4 - 14
		06/05/17	2.00	6,912.55	6,915.31	2.76	6,898.16	17.15	8.03	0.96	8.99	6,906.32	6,907.09	4 - 14
		10/03/17	2.00	6,912.55	6,915.31	2.76	6,898.16	17.15	7.77	0.83	8.60	6,906.71	6,907.37	4 - 14
		11/20/17	2.00	6,912.55	6,915.31	2.76	6,898.16	17.15	8.09	0.84	8.93	6,906.38	6,907.05	4 - 14
		02/07/18	2.00	6,912.55	6,915.31	2.76	6,898.16	17.15	8.53	0.83	9.36	6,905.95	6,906.61	4 - 14
		04/25/18	2.00	6,912.55	6,915.31	2.76	6,898.26	17.05	8.56	0.81	9.37	6,905.94	6,906.59	4 - 14
		08/15/18	2.00	6,912.55	6,915.31	2.76	6,898.14	17.17	8.73	0.84	9.57	6,905.74	6,906.41	4 - 14
		11/14/18	2.00	6,912.55	6,915.31	2.76	6,898.16	17.15	8.45	1.45	9.90	6,905.41	6,906.57	4 - 14
		02/14/19	2.00	6,912.55	6,915.31	2.76	6,898.16	17.15	8.38	0.77	9.15	6,906.16	6,906.78	4 - 14
		05/06/19	2.00	6,912.55	6,915.31	2.76	6,898.16	17.15	7.80	0.85	8.65	6,906.66	6,907.34	4 - 14
		08/23/19	2.00	6,912.55	6,915.31	2.76	6,898.14	17.17	8.22	0.83	9.05	6,906.26	6,906.92	4 - 14
		10/22/19	2.00	6,912.55	6,915.31	2.76	6,898.16	17.15	8.63	0.73	9.36	6,905.95	6,906.53	4 - 14

TABLE 9.2
5-YEAR HISTORICAL DTB/DTW MEASUREMENTS FOR WELLS MKTF-01 THRU MKTF-50

Date of Installation	Well ID Number	Inspection or Sample Date	Casing Diameter (Inch)	Ground Level Elevation (ft)	Well Casing Rim Elevation (ft)	Stick-up length (ft)	Well Casing Bottom Elevation (ft)	Total Well Depth (ft)	Depth to SPH (ft)	SPH Column Thickness (ft)	Depth to Water (ft)	Ground-water Elevation (ft)	Corrected Water Table[1] Elevation (ft)	Screened Interval Depth Top to Bottom (ft)
10/30/13	MKTF-27	03/11/15	2.00	6,915.36	6,917.90	2.54	6,903.18	14.72	ND	NA	7.10	6,910.80	NA	1 - 12
		06/09/15	2.00	6,915.36	6,917.90	2.54	6,903.18	14.72	ND	NA	7.44	6,910.46	NA	1 - 12
		08/20/15	2.00	6,915.36	6,917.90	2.54	6,902.18	15.72	ND	NA	7.85	6,910.05	NA	1 - 12
		11/04/15	2.00	6,915.36	6,917.90	2.54	6,903.18	14.72	ND	NA	7.53	6,910.37	NA	1 - 12
		02/22/16	2.00	6,915.36	6,917.90	2.54	6,903.18	14.72	ND	NA	7.20	6,910.70	NA	1 - 12
		06/08/16	2.00	6,915.36	6,917.90	2.54	6,903.18	14.72	ND	NA	7.51	6,910.39	NA	1 - 12
		09/07/16	2.00	6,915.36	6,917.90	2.54	6,902.18	15.72	ND	NA	8.06	6,909.84	NA	1 - 12
		11/04/16	2.00	6,915.36	6,917.90	2.54	6,903.18	14.72	ND	NA	7.53	6,910.37	NA	1 - 12
		03/06/17	2.00	6,915.36	6,917.90	2.54	6,903.18	14.72	ND	NA	6.02	6,911.88	NA	1 - 12
		06/05/17	2.00	6,915.36	6,917.90	2.54	6,903.18	14.72	ND	NA	6.32	6,911.58	NA	1 - 12
		10/03/17	2.00	6,915.36	6,917.90	2.54	6,903.18	14.72	ND	NA	5.90	6,912.00	NA	1 - 12
		11/20/17	2.00	6,915.36	6,917.90	2.54	6,903.18	14.72	ND	NA	5.98	6,911.92	NA	1 - 12
		02/06/18	2.00	6,915.36	6,917.90	2.54	6,903.18	14.72	ND	NA	6.25	6,911.65	NA	1 - 12
		04/25/18	2.00	6,915.36	6,917.90	2.54	6,903.28	14.62	ND	NA	6.34	6,911.56	NA	1 - 12
		08/15/18	2.00	6,915.36	6,917.90	2.54	6,903.18	14.72	ND	NA	6.15	6,911.75	NA	1 - 12
		11/14/18	2.00	6,915.36	6,917.90	2.54	6,903.18	14.72	ND	NA	6.31	6,911.59	NA	1 - 12
		02/25/19	2.00	6,915.36	6,917.90	2.54	6,903.18	14.72	ND	NA	3.75	6,914.15	NA	1 - 12
		05/06/19	2.00	6,915.36	6,917.90	2.54	6,903.18	14.72	ND	NA	5.73	6,912.17	NA	1 - 12
		08/21/19	2.00	6,915.36	6,917.90	2.54	6,903.18	14.72	ND	NA	5.66	6,912.24	NA	1 - 12
		10/22/19	2.00	6,915.36	6,917.90	2.54	6,903.18	14.72	ND	NA	6.14	6,911.76	NA	1 - 12

TABLE 9.2
5-YEAR HISTORICAL DTB/DTW MEASUREMENTS FOR WELLS MKTF-01 THRU MKTF-50

Date of Installation	Well ID Number	Inspection or Sample Date	Casing Diameter (Inch)	Ground Level Elevation (ft)	Well Casing Rim Elevation (ft)	Stick-up length (ft)	Well Casing Bottom Elevation (ft)	Total Well Depth (ft)	Depth to SPH (ft)	SPH Column Thickness (ft)	Depth to Water (ft)	Ground-water Elevation (ft)	Corrected Water Table[1] Elevation (ft)	Screened Interval Depth Top to Bottom (ft)
04/02/14	MKTF-28	03/11/15	2.00	6,918.67	6,921.52	2.85	6,905.36	16.16	ND	NA	6.64	6,914.88	NA	3 - 13
		06/09/15	2.00	6,918.67	6,921.52	2.85	6,905.36	16.16	ND	NA	5.40	6,916.12	NA	3 - 13
		08/20/15	2.00	6,918.67	6,921.52	2.85	6,904.36	17.16	ND	NA	6.42	6,915.10	NA	3 - 13
		11/04/15	2.00	6,918.67	6,921.52	2.85	6,905.36	16.16	ND	NA	5.74	6,915.78	NA	3 - 13
		02/23/16	2.00	6,918.67	6,921.52	2.85	6,905.36	16.16	ND	NA	5.32	6,916.20	NA	3 - 13
		06/08/16	2.00	6,918.67	6,921.52	2.85	6,905.36	16.16	ND	NA	5.28	6,916.24	NA	3 - 13
		09/08/16	2.00	6,918.67	6,921.52	2.85	6,904.36	17.16	ND	NA	6.40	6,915.12	NA	3 - 13
		11/04/16	2.00	6,918.67	6,921.52	2.85	6,905.36	16.16	ND	NA	5.74	6,915.78	NA	3 - 13
		03/06/17	2.00	6,918.67	6,921.52	2.85	6,905.36	16.16	ND	NA	4.68	6,916.84	NA	3 - 13
		06/05/17	2.00	6,918.67	6,921.52	2.85	6,905.36	16.16	ND	NA	7.90	6,913.62	NA	3 - 13
		10/03/17	2.00	6,918.67	6,921.52	2.85	6,905.36	16.16	ND	NA	4.28	6,917.24	NA	3 - 13
		11/20/17	2.00	6,918.67	6,921.52	2.85	6,905.39	16.13	ND	NA	7.90	6,913.62	NA	3 - 13
		02/06/18	2.00	6,918.67	6,921.52	2.85	6,905.39	16.13	ND	NA	6.73	6,914.79	NA	3 - 13
		04/25/18	2.00	6,918.67	6,921.52	2.85	6,905.48	16.04	ND	NA	6.98	6,914.54	NA	3 - 13
		08/15/18	2.00	6,918.67	6,921.52	2.85	6,905.37	16.15	ND	NA	4.45	6,917.07	NA	3 - 13
		11/14/18	2.00	6,918.67	6,921.52	2.85	6,905.39	16.13	ND	NA	6.12	6,915.40	NA	3 - 13
		02/25/19	2.00	6,918.67	6,921.52	2.85	6,905.36	16.16	ND	NA	4.91	6,916.61	NA	3 - 13
		05/06/19	2.00	6,918.67	6,921.52	2.85	6,905.36	16.16	ND	NA	9.27	6,912.25	NA	3 - 13
		08/21/19	2.00	6,918.67	6,921.52	2.85	6,905.37	16.15	ND	NA	3.82	6,917.70	NA	3 - 13
		10/22/19	2.00	6,918.67	6,921.52	2.85	6,905.39	16.13	ND	NA	6.38	6,915.14	NA	3 - 13

TABLE 9.2
5-YEAR HISTORICAL DTB/DTW MEASUREMENTS FOR WELLS MKTF-01 THRU MKTF-50

Date of Installation	Well ID Number	Inspection or Sample Date	Casing Diameter (Inch)	Ground Level Elevation (ft)	Well Casing Rim Elevation (ft)	Stick-up length (ft)	Well Casing Bottom Elevation (ft)	Total Well Depth (ft)	Depth to SPH (ft)	SPH Column Thickness (ft)	Depth to Water (ft)	Ground-water Elevation (ft)	Corrected Water Table[1] Elevation (ft)	Screened Interval Depth Top to Bottom (ft)
04/02/14	MKTF-29	03/11/15	2.00	6,898.83	6,901.62	2.79	6,878.78	22.84	ND	NA	2.04	6,899.58	NA	10 - 20
		06/10/15	2.00	6,898.83	6,901.62	2.79	6,878.78	22.84	ND	NA	2.69	6,898.93	NA	10 - 20
		08/20/15	2.00	6,898.83	6,901.62	2.79	6,877.78	23.84	ND	NA	2.30	6,899.32	NA	10 - 20
		11/04/15	2.00	6,898.83	6,901.62	2.79	6,878.78	22.84	ND	NA	2.40	6,899.22	NA	10 - 20
		02/23/16	2.00	6,898.83	6,901.62	2.79	6,878.78	22.84	ND	NA	1.92	6,899.70	NA	10 - 20
		06/09/16	2.00	6,898.83	6,901.62	2.79	6,878.78	22.84	ND	NA	2.69	6,898.93	NA	10 - 20
		09/07/16	2.00	6,898.83	6,901.62	2.79	6,877.78	23.84	ND	NA	4.52	6,897.10	NA	10 - 20
		11/04/16	2.00	6,898.83	6,901.62	2.79	6,878.78	22.84	ND	NA	2.40	6,899.22	NA	10 - 20
		03/06/17	2.00	6,898.83	6,901.62	2.79	6,878.78	22.84	ND	NA	0.99	6,900.63	NA	10 - 20
		06/05/17	2.00	6,898.83	6,901.62	2.79	6,878.78	22.84	ND	NA	0.95	6,900.67	NA	10 - 20
		10/03/17	2.00	6,898.83	6,901.62	2.79	6,878.78	22.84	ND	NA	1.59	6,900.03	NA	10 - 20
		11/20/17	2.00	6,898.83	6,901.62	2.79	6,878.82	22.80	ND	NA	1.91	6,899.71	NA	10 - 20
		02/06/18	2.00	6,898.83	6,901.62	2.79	6,878.81	22.81	ND	NA	1.93	6,899.69	NA	10 - 20
		04/25/18	2.00	6,898.83	6,901.62	2.79	6,878.85	22.77	ND	NA	2.12	6,899.50	NA	10 - 20
		08/15/18	2.00	6,898.83	6,901.62	2.79	6,878.80	22.82	ND	NA	3.92	6,897.70	NA	10 - 20
		11/14/18	2.00	6,898.83	6,901.62	2.79	6,878.82	22.80	ND	NA	4.09	6,897.53	NA	10 - 20
		02/25/19	2.00	6,898.83	6,901.62	2.79	6,878.78	22.84	ND	NA	3.73	6,897.89	NA	10 - 20
		05/06/19	2.00	6,898.83	6,901.62	2.79	6,878.78	22.84	ND	NA	3.72	6,897.90	NA	10 - 20
		08/23/19	2.00	6,898.83	6,901.62	2.79	6,878.80	22.82	ND	NA	5.83	6,895.79	NA	10 - 20
		10/22/19	2.00	6,898.83	6,901.62	2.79	6,878.82	22.80	ND	NA	6.32	6,895.30	NA	10 - 20

TABLE 9.2
5-YEAR HISTORICAL DTB/DTW MEASUREMENTS FOR WELLS MKTF-01 THRU MKTF-50

Date of Installation	Well ID Number	Inspection or Sample Date	Casing Diameter (Inch)	Ground Level Elevation (ft)	Well Casing Rim Elevation (ft)	Stick-up length (ft)	Well Casing Bottom Elevation (ft)	Total Well Depth (ft)	Depth to SPH (ft)	SPH Column Thickness (ft)	Depth to Water (ft)	Ground-water Elevation (ft)	Corrected Water Table[1] Elevation (ft)	Screened Interval Depth Top to Bottom (ft)
04/01/14	MKTF-30	03/11/15	2.00	6,898.10	6,900.80	2.70	6,877.60	23.20	ND	NA	14.74	6,886.06	NA	10 - 20
		06/10/15	2.00	6,898.10	6,900.80	2.70	6,877.60	23.20	ND	NA	14.57	6,886.23	NA	10 - 20
		08/20/15	2.00	6,898.10	6,900.80	2.70	6,876.60	24.20	ND	NA	15.29	6,885.51	NA	10 - 20
		11/04/15	2.00	6,898.10	6,900.80	2.70	6,877.60	23.20	ND	NA	14.74	6,886.06	NA	10 - 20
		02/23/16	2.00	6,898.10	6,900.80	2.70	6,877.60	23.20	ND	NA	14.40	6,886.40	NA	10 - 20
		06/09/16	2.00	6,898.10	6,900.80	2.70	6,877.60	23.20	ND	NA	14.01	6,886.79	NA	10 - 20
		09/07/16	2.00	6,898.10	6,900.80	2.70	6,876.60	24.20	ND	NA	15.48	6,885.32	NA	10 - 20
		11/04/16	2.00	6,898.10	6,900.80	2.70	6,877.60	23.20	ND	NA	14.74	6,886.06	NA	10 - 20
		03/06/17	2.00	6,898.10	6,900.80	2.70	6,877.60	23.20	ND	NA	14.13	6,886.67	NA	10 - 20
		06/05/17	2.00	6,898.10	6,900.80	2.70	6,877.60	23.20	ND	NA	13.87	6,886.93	NA	10 - 20
		10/03/17	2.00	6,898.10	6,900.80	2.70	6,877.60	23.20	ND	NA	15.03	6,885.77	NA	10 - 20
		11/20/17	2.00	6,898.10	6,900.80	2.70	6,877.61	23.19	ND	NA	14.91	6,885.89	NA	10 - 20
		02/06/18	2.00	6,898.10	6,900.80	2.70	6,877.60	23.20	ND	NA	14.20	6,886.60	NA	10 - 20
		04/25/18	2.00	6,898.10	6,900.80	2.70	6,877.70	23.10	ND	NA	13.79	6,887.01	NA	10 - 20
		08/15/18	2.00	6,898.10	6,900.80	2.70	6,877.60	23.20	ND	NA	14.65	6,886.15	NA	10 - 20
		11/14/18	2.00	6,898.10	6,900.80	2.70	6,877.61	23.19	ND	NA	15.15	6,885.65	NA	10 - 20
		03/28/19	2.00	6,898.10	6,900.80	2.70	6,877.60	23.20	ND	NA	13.68	6,887.12	NA	10 - 20
		05/06/19	2.00	6,898.10	6,900.80	2.70	6,877.60	23.20	ND	NA	13.81	6,886.99	NA	10 - 20
		08/23/19	2.00	6,898.10	6,900.80	2.70	6,877.60	23.20	ND	NA	14.88	6,885.92	NA	10 - 20
		10/22/19	2.00	6,898.10	6,900.80	2.70	6,877.61	23.19	ND	NA	15.82	6,884.98	NA	10 - 20

TABLE 9.2
5-YEAR HISTORICAL DTB/DTW MEASUREMENTS FOR WELLS MKTF-01 THRU MKTF-50

Date of Installation	Well ID Number	Inspection or Sample Date	Casing Diameter (Inch)	Ground Level Elevation (ft)	Well Casing Rim Elevation (ft)	Stick-up length (ft)	Well Casing Bottom Elevation (ft)	Total Well Depth (ft)	Depth to SPH (ft)	SPH Column Thickness (ft)	Depth to Water (ft)	Ground-water Elevation (ft)	Corrected Water Table[1] Elevation (ft)	Screened Interval Depth Top to Bottom (ft)
04/01/14	MKTF-31	03/11/15	2.00	6,904.26	6,906.87	2.61	6,884.06	22.81	ND	NA	7.98	6,898.89	NA	6 - 21
		06/10/15	2.00	6,904.26	6,906.87	2.61	6,884.06	22.81	ND	NA	7.75	6,899.12	NA	6 - 21
		08/21/15	2.00	6,904.26	6,906.87	2.61	6,883.06	23.81	ND	NA	8.09	6,898.78	NA	6 - 21
		11/04/15	2.00	6,904.26	6,906.87	2.61	6,884.06	22.81	ND	NA	8.14	6,898.73	NA	6 - 21
		02/23/16	2.00	6,904.26	6,906.87	2.61	6,884.06	22.81	ND	NA	7.95	6,898.92	NA	6 - 21
		06/09/16	2.00	6,904.26	6,906.87	2.61	6,884.06	22.81	ND	NA	7.75	6,899.12	NA	6 - 21
		09/08/16	2.00	6,904.26	6,906.87	2.61	6,883.06	23.81	ND	NA	8.48	6,898.39	NA	6 - 21
		11/04/16	2.00	6,904.26	6,906.87	2.61	6,884.06	22.81	ND	NA	8.14	6,898.73	NA	6 - 21
		03/07/17	2.00	6,904.26	6,906.87	2.61	6,884.06	22.81	ND	NA	7.84	6,899.03	NA	6 - 21
		06/05/17	2.00	6,904.26	6,906.87	2.61	6,884.06	22.81	ND	NA	7.58	6,899.29	NA	6 - 21
		09/25/17	2.00	6,904.26	6,906.87	2.61	6,883.06	23.81	ND	NA	8.29	6,898.58	NA	6 - 21
		11/21/17	2.00	6,904.26	6,906.87	2.61	6,887.57	19.30	ND	NA	8.15	6,898.72	NA	6 - 21
		02/05/18	2.00	6,904.26	6,906.87	2.61	6,887.56	19.31	ND	NA	7.90	6,898.97	NA	6 - 21
		04/25/18	2.00	6,904.26	6,906.87	2.61	6,887.61	19.26	ND	NA	7.73	6,899.14	NA	6 - 21
		08/15/18	2.00	6,904.26	6,906.87	2.61	6,887.52	19.35	ND	NA	8.25	6,898.62	NA	6 - 21
		11/14/18	2.00	6,904.26	6,906.87	2.61	6,887.57	19.30	ND	NA	8.44	6,898.43	NA	6 - 21
		02/14/19	2.00	6,904.26	6,906.87	2.61	6,884.06	22.81	ND	NA	8.25	6,898.62	NA	6 - 21
		05/06/19	2.00	6,904.26	6,906.87	2.61	6,884.06	22.81	ND	NA	7.72	6,899.15	NA	6 - 21
		08/23/19	2.00	6,904.26	6,906.87	2.61	6,887.52	19.35	ND	NA	8.30	6,898.57	NA	6 - 21
		10/22/19	2.00	6,904.26	6,906.87	2.61	6,887.57	19.30	ND	NA	8.64	6,898.23	NA	6 - 21

TABLE 9.2
5-YEAR HISTORICAL DTB/DTW MEASUREMENTS FOR WELLS MKTF-01 THRU MKTF-50

Date of Installation	Well ID Number	Inspection or Sample Date	Casing Diameter (Inch)	Ground Level Elevation (ft)	Well Casing Rim Elevation (ft)	Stick-up length (ft)	Well Casing Bottom Elevation (ft)	Total Well Depth (ft)	Depth to SPH (ft)	SPH Column Thickness (ft)	Depth to Water (ft)	Ground-water Elevation (ft)	Corrected Water Table[1] Elevation (ft)	Screened Interval Depth Top to Bottom (ft)
03/31/14	MKTF-32	03/12/15	2.00	6,908.44	6,911.11	2.67	6,883.36	27.75	ND	NA	15.49	6,895.62	NA	9 - 24
		06/09/15	2.00	6,908.44	6,911.11	2.67	6,883.36	27.75	ND	NA	15.49	6,895.62	NA	9 - 24
		08/21/15	2.00	6,908.44	6,911.11	2.67	6,882.36	28.75	ND	NA	15.15	6,895.96	NA	9- 24
		11/05/15	2.00	6,908.44	6,911.11	2.67	6,883.36	27.75	ND	NA	14.84	6,896.27	NA	9 - 24
		02/24/16	2.00	6,908.44	6,911.11	2.67	6,883.36	27.75	ND	NA	14.53	6,896.58	NA	9 - 24
		06/09/16	2.00	6,908.44	6,911.11	2.67	6,883.36	27.75	ND	NA	14.31	6,896.80	NA	9 - 24
		09/09/16	2.00	6,908.44	6,911.11	2.67	6,882.36	28.75	ND	NA	14.40	6,896.71	NA	9- 24
		11/05/16	2.00	6,908.44	6,911.11	2.67	6,883.36	27.75	ND	NA	14.84	6,896.27	NA	9 - 24
		03/07/17	2.00	6,908.44	6,911.11	2.67	6,883.36	27.75	ND	NA	13.70	6,897.41	NA	9 - 24
		06/06/17	2.00	6,908.44	6,911.11	2.67	6,883.36	27.75	ND	NA	13.79	6,897.32	NA	9 - 24
		09/25/17	2.00	6,908.44	6,911.11	2.67	6,882.36	28.75	ND	NA	14.11	6,897.00	NA	9- 24
		11/27/17	2.00	6,908.44	6,911.11	2.67	6,883.36	27.75	ND	NA	13.57	6,897.54	NA	9 - 24
		02/07/18	2.00	6,908.44	6,911.11	2.67	6,883.36	27.75	ND	NA	13.70	6,897.41	NA	9 - 24
		04/25/18	2.00	6,908.44	6,911.11	2.67	6,883.45	27.66	ND	NA	13.48	6,897.63	NA	9 - 24
		08/15/18	2.00	6,908.44	6,911.11	2.67	6,883.34	27.77	ND	NA	14.00	6,897.11	NA	9- 24
		11/14/18	2.00	6,908.44	6,911.11	2.67	6,883.36	27.75	ND	NA	14.10	6,897.01	NA	9 - 24
		02/13/19	2.00	6,908.44	6,911.11	2.67	6,883.36	27.75	ND	NA	13.49	6,897.62	NA	9 - 24
		05/07/19	2.00	6,908.44	6,911.11	2.67	6,883.36	27.75	ND	NA	13.25	6,897.86	NA	9 - 24
		08/20/19	2.00	6,908.44	6,911.11	2.67	6,883.34	27.77	ND	NA	14.03	6,897.08	NA	9- 24
		10/23/19	2.00	6,908.44	6,911.11	2.67	6,883.36	27.75	ND	NA	14.01	6,897.10	NA	9 - 24

TABLE 9.2
5-YEAR HISTORICAL DTB/DTW MEASUREMENTS FOR WELLS MKTF-01 THRU MKTF-50

Date of Installation	Well ID Number	Inspection or Sample Date	Casing Diameter (Inch)	Ground Level Elevation (ft)	Well Casing Rim Elevation (ft)	Stick-up length (ft)	Well Casing Bottom Elevation (ft)	Total Well Depth (ft)	Depth to SPH (ft)	SPH Column Thickness (ft)	Depth to Water (ft)	Ground-water Elevation (ft)	Corrected Water Table[1] Elevation (ft)	Screened Interval Depth Top to Bottom (ft)
04/03/14	MKTF-33	03/12/15	2.00	6,936.59	6,939.75	3.16	6,906.55	33.20	ND	NA	23.32	6,916.43	NA	20 - 30
		06/09/15	2.00	6,936.59	6,939.75	3.16	6,906.55	33.20	ND	NA	23.30	6,916.45	NA	20 - 30
		08/21/15	2.00	6,936.59	6,939.75	3.16	6,905.55	34.20	ND	NA	23.32	6,916.43	NA	20 - 30
		11/09/15	2.00	6,936.59	6,939.75	3.16	6,906.55	33.20	ND	NA	23.19	6,916.56	NA	20 - 30
		02/25/16	2.00	6,936.59	6,939.75	3.16	6,906.55	33.20	ND	NA	23.20	6,916.55	NA	20 - 30
		06/10/16	2.00	6,936.59	6,939.75	3.16	6,906.55	33.20	ND	NA	23.29	6,916.46	NA	20 - 30
		09/10/16	2.00	6,936.59	6,939.75	3.16	6,905.55	34.20	ND	NA	23.20	6,916.55	NA	20 - 30
		11/09/16	2.00	6,936.59	6,939.75	3.16	6,906.55	33.20	ND	NA	23.19	6,916.56	NA	20 - 30
		03/08/17	2.00	6,936.59	6,939.75	3.16	6,906.55	33.20	ND	NA	22.16	6,917.59	NA	20 - 30
		06/07/17	2.00	6,936.59	6,939.75	3.16	6,906.55	33.20	ND	NA	22.07	6,917.68	NA	20 - 30
		09/25/17	2.00	6,936.59	6,939.75	3.16	6,906.55	33.20	ND	NA	22.50	6,917.25	NA	20 - 30
		11/27/17	2.00	6,936.59	6,939.75	3.16	6,906.53	33.22	ND	NA	22.27	6,917.48	NA	20 - 30
		02/07/18	2.00	6,936.59	6,939.75	3.16	6,906.55	33.20	ND	NA	22.65	6,917.10	NA	20 - 30
		04/26/18	2.00	6,936.59	6,939.75	3.16	6,906.64	33.11	ND	NA	22.55	6,917.20	NA	20 - 30
		08/15/18	2.00	6,936.59	6,939.75	3.16	6,906.52	33.23	ND	NA	22.85	6,916.90	NA	20 - 30
		11/27/18	2.00	6,936.59	6,939.75	3.16	6,906.53	33.22	ND	NA	22.72	6,917.03	NA	20 - 30
		03/25/19	2.00	6,936.59	6,939.75	3.16	6,906.55	33.20	ND	NA	22.00	6,917.75	NA	20 - 30
		05/09/19	2.00	6,936.59	6,939.75	3.16	6,906.55	33.20	ND	NA	22.04	6,917.71	NA	20 - 30
		08/20/19	2.00	6,936.59	6,939.75	3.16	6,906.52	33.23	ND	NA	22.35	6,917.40	NA	20 - 30
		10/24/19	2.00	6,936.59	6,939.75	3.16	6,906.53	33.22	ND	NA	22.50	6,917.25	NA	20 - 30

TABLE 9.2
5-YEAR HISTORICAL DTB/DTW MEASUREMENTS FOR WELLS MKTF-01 THRU MKTF-50

Date of Installation	Well ID Number	Inspection or Sample Date	Casing Diameter (Inch)	Ground Level Elevation (ft)	Well Casing Rim Elevation (ft)	Stick-up length (ft)	Well Casing Bottom Elevation (ft)	Total Well Depth (ft)	Depth to SPH (ft)	SPH Column Thickness (ft)	Depth to Water (ft)	Ground-water Elevation (ft)	Corrected Water Table[1] Elevation (ft)	Screened Interval Depth Top to Bottom (ft)
03/31/14	MKTF-34	03/12/15	2.00	6,942.42	6,945.35	2.93	6,917.67	27.68	ND	NA	18.77	6,926.58	NA	9 - 24
		06/08/15	2.00	6,942.42	6,945.35	2.93	6,917.67	27.68	ND	NA	18.90	6,926.45	NA	9 - 24
		08/18/15	2.00	6,942.42	6,945.35	2.93	6,916.67	28.68	ND	NA	18.74	6,926.61	NA	9 - 24
		11/03/15	2.00	6,942.42	6,945.35	2.93	6,917.67	27.68	ND	NA	19.00	6,926.35	NA	9 - 24
		02/25/16	2.00	6,942.42	6,945.35	2.93	6,917.67	27.68	ND	NA	19.20	6,926.15	NA	9 - 24
		06/10/16	2.00	6,942.42	6,945.35	2.93	6,917.67	27.68	ND	NA	18.60	6,926.75	NA	9 - 24
		09/12/16	2.00	6,942.42	6,945.35	2.93	6,916.67	28.68	ND	NA	18.03	6,927.32	NA	9 - 24
		11/03/16	2.00	6,942.42	6,945.35	2.93	6,917.67	27.68	ND	NA	19.00	6,926.35	NA	9 - 24
		03/01/17	2.00	6,942.42	6,945.35	2.93	6,917.67	27.68	ND	NA	16.50	6,928.85	NA	9 - 24
		06/14/17	2.00	6,942.42	6,945.35	2.93	6,917.67	27.68	ND	NA	17.63	6,927.72	NA	9 - 24
		09/26/17	2.00	6,942.42	6,945.35	2.93	6,917.67	27.68	ND	NA	17.62	6,927.73	NA	9 - 24
		11/30/17	2.00	6,942.42	6,945.35	2.93	6,917.65	27.70	ND	NA	18.03	6,927.32	NA	9 - 24
		02/15/18	2.00	6,942.42	6,945.35	2.93	6,917.64	27.71	ND	NA	18.80	6,926.55	NA	9 - 24
		04/26/18	2.00	6,942.42	6,945.35	2.93	6,917.75	27.60	ND	NA	18.63	6,926.72	NA	9 - 24
		08/15/18	2.00	6,942.42	6,945.35	2.93	6,917.65	27.70	ND	NA	18.58	6,926.77	NA	9 - 24
		11/27/18	2.00	6,942.42	6,945.35	2.93	6,917.65	27.70	ND	NA	18.95	6,926.40	NA	9 - 24
		03/25/19	2.00	6,942.42	6,945.35	2.93	6,917.67	27.68	ND	NA	16.95	6,928.40	NA	9 - 24
		05/09/19	2.00	6,942.42	6,945.35	2.93	6,917.67	27.68	ND	NA	18.09	6,927.26	NA	9 - 24
		08/19/19	2.00	6,942.42	6,945.35	2.93	6,917.65	27.70	ND	NA	17.70	6,927.65	NA	9 - 24
		10/29/19	2.00	6,942.42	6,945.35	2.93	6,917.65	27.70	ND	NA	18.03	6,927.32	NA	9 - 24
		11/12/19	2.00	6,942.42	6,945.35	2.93	6,917.65	27.70	ND	NA	18.06	6,927.29	NA	9 - 24

TABLE 9.2
5-YEAR HISTORICAL DTB/DTW MEASUREMENTS FOR WELLS MKTF-01 THRU MKTF-50

Date of Installation	Well ID Number	Inspection or Sample Date	Casing Diameter (Inch)	Ground Level Elevation (ft)	Well Casing Rim Elevation (ft)	Stick-up length (ft)	Well Casing Bottom Elevation (ft)	Total Well Depth (ft)	Depth to SPH (ft)	SPH Column Thickness (ft)	Depth to Water (ft)	Ground-water Elevation (ft)	Corrected Water Table[1] Elevation (ft)	Screened Interval Depth Top to Bottom (ft)
11/19/14	MKTF-35	03/17/15	2.00	6,951.90	6,951.65	-0.25	6,935.20	16.45	ND	NA	8.93	6,942.72	NA	6 - 16
		06/04/15	2.00	6,951.90	6,951.65	-0.25	6,935.20	16.45	ND	NA	8.93	6,942.72	NA	6 - 16
		08/18/15	2.00	6,951.90	6,951.65	-0.25	6,935.20	16.45	ND	NA	8.91	6,942.74	NA	6 - 16
		11/03/15	2.00	6,951.90	6,951.65	-0.25	6,935.20	16.45	ND	NA	9.02	6,942.63	NA	6 - 16
		02/26/16	2.00	6,951.90	6,951.65	-0.25	6,935.20	16.45	ND	NA	8.40	6,943.25	NA	6 - 16
		06/10/16	2.00	6,951.90	6,951.65	-0.25	6,935.20	16.45	ND	NA	7.37	6,944.28	NA	6 - 16
		09/12/16	2.00	6,951.90	6,951.65	-0.25	6,935.20	16.45	ND	NA	6.65	6,945.00	NA	6 - 16
		11/03/16	2.00	6,951.90	6,951.65	-0.25	6,935.20	16.45	ND	NA	9.02	6,942.63	NA	6 - 16
		03/01/17	2.00	6,951.90	6,951.65	-0.25	6,935.20	16.45	ND	NA	6.18	6,945.47	NA	6 - 16
		06/14/17	2.00	6,951.90	6,951.65	-0.25	6,935.20	16.45	ND	NA	7.12	6,944.53	NA	6 - 16
		09/27/17	2.00	6,951.90	6,951.65	-0.25	6,935.20	16.45	ND	NA	7.70	6,943.95	NA	6 - 16
		11/30/17	2.00	6,951.90	6,951.65	-0.25	6,935.20	16.45	ND	NA	8.15	6,943.50	NA	6 - 16
		02/15/18	2.00	6,951.90	6,951.65	-0.25	6,935.18	16.47	ND	NA	8.70	6,942.95	NA	6 - 16
		04/26/18	2.00	6,951.90	6,951.65	-0.25	6,935.25	16.40	ND	NA	8.53	6,943.12	NA	6 - 16
		08/16/18	2.00	6,951.90	6,951.65	-0.25	6,935.17	16.48	ND	NA	8.70	6,942.95	NA	6 - 16
		11/27/18	2.00	6,951.90	6,951.65	-0.25	6,935.20	16.45	ND	NA	9.10	6,942.55	NA	6 - 16
		03/25/19	2.00	6,951.90	6,951.65	-0.25	6,935.20	16.45	ND	NA	8.54	6,943.11	NA	6 - 16
		05/16/19	2.00	6,951.90	6,951.65	-0.25	6,935.20	16.45	ND	NA	8.49	6,943.16	NA	6 - 16
		08/19/19	2.00	6,951.90	6,951.65	-0.25	6,935.17	16.48	ND	NA	8.09	6,943.56	NA	6 - 16
		10/28/19	2.00	6,951.90	6,951.65	-0.25	6,935.20	16.45	ND	NA	8.42	6,943.23	NA	6 - 16
		10/29/19	2.00	6,951.90	6,951.65	-0.25	6,935.20	16.45	ND	NA	8.40	6,943.25	NA	6 - 16
		11/12/19	2.00	6,951.90	6,951.65	-0.25	6,935.20	16.45	ND	NA	8.60	6,943.05	NA	6 - 16

TABLE 9.2
5-YEAR HISTORICAL DTB/DTW MEASUREMENTS FOR WELLS MKTF-01 THRU MKTF-50

Date of Installation	Well ID Number	Inspection or Sample Date	Casing Diameter (Inch)	Ground Level Elevation (ft)	Well Casing Rim Elevation (ft)	Stick-up length (ft)	Well Casing Bottom Elevation (ft)	Total Well Depth (ft)	Depth to SPH (ft)	SPH Column Thickness (ft)	Depth to Water (ft)	Ground-water Elevation (ft)	Corrected Water Table[1] Elevation (ft)	Screened Interval Depth Top to Bottom (ft)
11/19/14	MKTF-36	03/17/15	2.00	6,950.67	6,950.12	-0.55	6,934.67	15.45	ND	NA	7.71	6,942.41	NA	5 - 15
		06/04/15	2.00	6,950.67	6,950.12	-0.55	6,934.67	15.45	ND	NA	7.53	6,942.59	NA	5 - 15
		08/18/15	2.00	6,950.67	6,950.12	-0.55	6,934.67	15.45	ND	NA	7.50	6,942.62	NA	5 - 15
		11/03/15	2.00	6,950.67	6,950.12	-0.55	6,934.67	15.45	7.00	0.66	7.66	6,942.46	6,942.99	5 - 15
		03/17/16	2.00	6,950.67	6,950.12	-0.55	6,934.67	15.45	ND	NA	7.71	6,942.41	NA	5 - 15
		06/10/16	2.00	6,950.67	6,950.12	-0.55	6,934.67	15.45	6.78	0.02	6.80	6,943.32	6,943.34	5 - 15
		09/13/16	2.00	6,950.67	6,950.12	-0.55	6,934.67	15.45	6.54	0.01	6.55	6,943.57	6,943.58	5 - 15
		11/03/16	2.00	6,950.67	6,950.12	-0.55	6,934.67	15.45	7.00	0.66	7.66	6,942.46	6,942.99	5 - 15
		03/01/17	2.00	6,950.67	6,950.12	-0.55	6,934.67	15.45	ND	NA	5.56	6,944.56	NA	5 - 15
		06/14/17	2.00	6,950.67	6,950.12	-0.55	6,934.67	15.45	ND	NA	5.40	6,944.72	NA	5 - 15
		09/27/17	2.00	6,950.67	6,950.12	-0.55	6,934.67	15.45	ND	NA	5.80	6,944.32	NA	5 - 15
		11/30/17	2.00	6,950.67	6,950.12	-0.55	6,934.67	15.45	ND	NA	6.45	6,943.67	NA	5 - 15
		02/15/18	2.00	6,950.67	6,950.12	-0.55	6,934.67	15.45	ND	NA	6.86	6,943.26	NA	5 - 15
		04/26/18	2.00	6,950.67	6,950.12	-0.55	6,934.72	15.40	ND	NA	6.56	6,943.56	NA	5 - 15
		09/05/18	2.00	6,950.67	6,950.12	-0.55	6,934.69	15.43	ND	NA	6.52	6,943.60	NA	5 - 15
		11/29/18	2.00	6,950.67	6,950.12	-0.55	6,934.67	NM	NM	NA	NM	NA	NA	5 - 15
		03/25/19	2.00	6,950.67	6,950.12	-0.55	6,934.67	NM	NM	NA	NM	NA	NA	5 - 15
		05/14/19	2.00	6,950.67	6,950.12	-0.55	6,934.67	NM	NM	NA	NM	NA	NA	5 - 15
		08/19/19	2.00	6,950.67	6,950.12	-0.55	6,934.67	NM	NM	NA	NM	NA	NA	5 - 15
		10/28/19	2.00	6,950.67	6,950.12	-0.55	6,934.67	NM	NM	NA	NM	NA	NA	5 - 15
		11/06/19	2.00	6,950.67	6,950.12	-0.55	6,934.72	15.40	5.08	5.25	10.33	6,939.79	6,943.99	5 - 15
		11/07/19	2.00	6,953.90	6,953.51	-0.39	6,937.90	15.61	4.30	5.91	10.21	6,943.30	6,948.03	5 - 15
		11/12/19	2.00	6,953.90	6,953.51	-0.39	6,937.90	15.61	6.80	2.85	9.65	6,943.86	6,946.14	5 - 15
		11/13/19	2.00	6,953.90	6,953.51	-0.39	6,937.90	15.61	6.95	2.45	9.40	6,944.11	6,946.07	5 - 15
		11/14/19	2.00	6,953.90	6,953.51	-0.39	6,937.90	15.61	7.14	2.47	9.61	6,943.90	6,945.88	5 - 15
		11/15/19	2.00	6,953.90	6,953.51	-0.39	6,937.90	15.61	7.31	2.15	9.46	6,944.05	6,945.77	5 - 15
		11/19/19	2.00	6,953.90	6,953.51	-0.39	6,937.90	15.61	7.80	1.18	8.98	6,944.53	6,945.47	5 - 15
		11/21/19	2.00	6,953.90	6,953.51	-0.39	6,937.90	15.61	8.00	0.78	8.78	6,944.73	6,945.35	5 - 15
		12/02/19	2.00	6,953.90	6,953.51	-0.39	6,937.90	15.61	8.25	0.70	8.95	6,944.56	6,945.12	5 - 15

TABLE 9.2
5-YEAR HISTORICAL DTB/DTW MEASUREMENTS FOR WELLS MKTF-01 THRU MKTF-50

Date of Installation	Well ID Number	Inspection or Sample Date	Casing Diameter (Inch)	Ground Level Elevation (ft)	Well Casing Rim Elevation (ft)	Stick-up length (ft)	Well Casing Bottom Elevation (ft)	Total Well Depth (ft)	Depth to SPH (ft)	SPH Column Thickness (ft)	Depth to Water (ft)	Ground-water Elevation (ft)	Corrected Water Table[1] Elevation (ft)	Screened Interval Depth Top to Bottom (ft)
11/18/14	MKTF-37	03/17/15	2.00	6,959.07	6,958.87	-0.20	6,934.27	24.60	ND	NA	9.21	6,949.66	NA	4 - 24
		06/04/15	2.00	6,959.07	6,958.87	-0.20	6,934.27	24.60	ND	NA	9.48	6,949.39	NA	4 - 24
		08/18/15	2.00	6,959.07	6,958.87	-0.20	6,934.27	24.60	ND	NA	9.45	6,949.42	NA	4 - 24
		11/03/15	2.00	6,959.07	6,958.87	-0.20	6,934.27	24.60	9.54	0.03	9.57	6,949.30	6,949.32	4 - 24
		03/17/16	2.00	6,959.07	6,958.87	-0.20	6,934.27	24.60	ND	NA	9.21	6,949.66	NA	4 - 24
		06/10/16	2.00	6,959.07	6,958.87	-0.20	6,934.27	24.60	8.21	0.02	8.23	6,950.64	6,950.66	4 - 24
		09/12/16	2.00	6,959.07	6,958.87	-0.20	6,934.27	24.60	ND	NA	7.65	6,951.22	NA	4 - 24
		11/03/16	2.00	6,959.07	6,958.87	-0.20	6,934.27	24.60	9.54	0.03	9.57	6,949.30	6,949.32	4 - 24
		03/01/17	2.00	6,959.07	6,958.87	-0.20	6,934.27	24.60	ND	NA	6.90	6,951.97	NA	4 - 24
		06/14/17	2.00	6,959.07	6,958.87	-0.20	6,934.27	24.60	7.20	0.04	7.24	6,951.63	6,951.66	4 - 24
		09/27/17	2.00	6,959.07	6,958.87	-0.20	6,934.27	24.60	7.83	0.06	7.89	6,950.98	6,951.03	4 - 24
		11/30/17	2.00	6,959.07	6,958.87	-0.20	6,934.27	24.60	8.39	0.02	8.41	6,950.46	6,950.48	4 - 24
		02/15/18	2.00	6,959.07	6,958.87	-0.20	6,934.27	24.60	8.96	0.04	9.00	6,949.87	6,949.90	4 - 24
		04/26/18	2.00	6,959.07	6,958.87	-0.20	6,934.33	24.54	ND	NA	8.52	6,950.35	NA	4 - 24
		08/16/18	2.00	6,959.07	6,958.87	-0.20	6,934.28	24.59	ND	NA	8.70	6,950.17	NA	4 - 24
		11/27/18	2.00	6,959.07	6,958.87	-0.20	6,934.27	24.60	9.40	0.12	9.52	6,949.35	6,949.45	4 - 24
		03/25/19	2.00	6,959.07	6,958.87	-0.20	6,934.27	24.60	ND	NA	8.39	6,950.48	NA	4 - 24
		05/16/19	2.00	6,959.07	6,958.87	-0.20	6,934.27	24.60	9.10	0.08	9.18	6,949.69	6,949.75	4 - 24
		08/23/19	2.00	6,959.07	6,958.87	-0.20	6,934.28	24.59	8.85	0.02	8.87	6,950.00	6,950.02	4 - 24
		10/28/19	2.00	6,959.07	6,958.87	-0.20	6,934.27	24.60	9.30	0.03	9.33	6,949.54	6,949.56	4 - 24
		10/29/19	2.00	6,959.07	6,958.87	-0.20	6,934.27	24.60	9.17	0.03	9.20	6,949.67	6,949.69	4 - 24
		11/12/19	2.00	6,959.07	6,958.87	-0.20	6,934.27	24.60	9.52	0.04	9.56	6,949.31	6,949.34	4 - 24

TABLE 9.2
5-YEAR HISTORICAL DTB/DTW MEASUREMENTS FOR WELLS MKTF-01 THRU MKTF-50

Date of Installation	Well ID Number	Inspection or Sample Date	Casing Diameter (Inch)	Ground Level Elevation (ft)	Well Casing Rim Elevation (ft)	Stick-up length (ft)	Well Casing Bottom Elevation (ft)	Total Well Depth (ft)	Depth to SPH (ft)	SPH Column Thickness (ft)	Depth to Water (ft)	Ground-water Elevation (ft)	Corrected Water Table[1] Elevation (ft)	Screened Interval Depth Top to Bottom (ft)
11/20/14	MKTF-38	03/16/15	2.00	6,955.17	6,954.89	-0.28	6,934.60	20.29	ND	NA	9.00	6,945.89	NA	5 - 20
		06/10/15	2.00	6,955.17	6,954.89	-0.28	6,934.60	20.29	ND	NA	9.34	6,945.55	NA	5 - 20
		08/24/15	2.00	6,955.17	6,954.89	-0.28	6,934.60	20.29	ND	NA	9.25	6,945.64	NA	5 - 20
		11/09/15	2.00	6,955.17	6,954.89	-0.28	6,934.60	20.29	ND	NA	9.45	6,945.44	NA	5 - 20
		02/29/16	2.00	6,955.17	6,954.89	-0.28	6,934.60	20.29	ND	NA	8.63	6,946.26	NA	5 - 20
		06/08/16	2.00	6,955.17	6,954.89	-0.28	6,934.60	20.29	ND	NA	8.43	6,946.46	NA	5 - 20
		09/13/16	2.00	6,955.17	6,954.89	-0.28	6,934.60	20.29	ND	NA	8.00	6,946.89	NA	5 - 20
		11/09/16	2.00	6,955.17	6,954.89	-0.28	6,934.60	20.29	ND	NA	9.45	6,945.44	NA	5 - 20
		03/14/17	2.00	6,955.17	6,954.89	-0.28	6,934.60	20.29	ND	NA	6.41	6,948.48	NA	5 - 20
		06/21/17	2.00	6,955.17	6,954.89	-0.28	6,934.60	20.29	ND	NA	6.40	6,948.49	NA	5 - 20
		09/28/17	2.00	6,955.17	6,954.89	-0.28	6,934.60	20.29	ND	NA	6.32	6,948.57	NA	5 - 20
		11/30/17	2.00	6,955.17	6,954.89	-0.28	6,934.60	20.29	ND	NA	7.83	6,947.06	NA	5 - 20
		02/12/18	2.00	6,955.17	6,954.89	-0.28	6,934.59	20.30	ND	NA	8.40	6,946.49	NA	5 - 20
		04/25/18	2.00	6,955.17	6,954.89	-0.28	6,934.61	20.28	ND	NA	7.79	6,947.10	NA	5 - 20
		08/16/18	2.00	6,955.17	6,954.89	-0.28	6,934.62	20.27	ND	NA	8.05	6,946.84	NA	5 - 20
		11/19/18	2.00	6,955.17	6,954.89	-0.28	6,934.60	20.29	ND	NA	8.99	6,945.90	NA	5 - 20
		03/26/19	2.00	6,955.17	6,954.89	-0.28	6,934.60	20.29	ND	NA	11.30	6,943.59	NA	5 - 20
		05/14/19	2.00	6,955.17	6,954.89	-0.28	6,934.60	20.29	ND	NA	8.66	6,946.23	NA	5 - 20
		06/27/19	2.00	6,955.17	6,954.89	-0.28	6,934.60	20.29	ND	NA	8.75	6,946.14	NA	5 - 20
		08/20/19	2.00	6,955.17	6,954.89	-0.28	6,934.62	20.27	ND	NA	8.77	6,946.12	NA	5 - 20
		12/03/19	2.00	6,955.17	6,954.89	-0.28	6,934.60	20.29	ND	NA	9.50	6,945.39	NA	5 - 20

TABLE 9.2
5-YEAR HISTORICAL DTB/DTW MEASUREMENTS FOR WELLS MKTF-01 THRU MKTF-50

Date of Installation	Well ID Number	Inspection or Sample Date	Casing Diameter (Inch)	Ground Level Elevation (ft)	Well Casing Rim Elevation (ft)	Stick-up length (ft)	Well Casing Bottom Elevation (ft)	Total Well Depth (ft)	Depth to SPH (ft)	SPH Column Thickness (ft)	Depth to Water (ft)	Ground-water Elevation (ft)	Corrected Water Table[1] Elevation (ft)	Screened Interval Depth Top to Bottom (ft)
11/14/14	MKTF-39	03/16/15	2.00	6,953.97	6,953.75	-0.22	6,938.55	15.20	ND	NA	8.88	6,944.87	NA	5 - 15
		06/10/15	2.00	6,953.97	6,953.75	-0.22	6,938.55	15.20	ND	NA	9.31	6,944.44	NA	5 - 15
		08/23/15	2.00	6,953.97	6,953.75	-0.22	6,938.55	15.20	ND	NA	9.24	6,944.51	NA	5 - 15
		11/09/15	2.00	6,953.97	6,953.75	-0.22	6,938.55	15.20	ND	NA	9.39	6,944.36	NA	5 - 15
		03/03/16	2.00	6,953.97	6,953.75	-0.22	6,938.55	15.20	ND	NA	8.50	6,945.25	NA	5 - 15
		06/08/16	2.00	6,953.97	6,953.75	-0.22	6,938.55	15.20	ND	NA	8.33	6,945.42	NA	5 - 15
		09/13/16	2.00	6,953.97	6,953.75	-0.22	6,938.55	15.20	ND	NA	8.40	6,945.35	NA	5 - 15
		11/09/16	2.00	6,953.97	6,953.75	-0.22	6,938.55	15.20	ND	NA	9.39	6,944.36	NA	5 - 15
		03/14/17	2.00	6,953.97	6,953.75	-0.22	6,938.55	15.20	ND	NA	6.44	6,947.31	NA	5 - 15
		06/08/17	2.00	6,953.97	6,953.75	-0.22	6,938.55	15.20	ND	NA	6.25	6,947.50	NA	5 - 15
		09/28/17	2.00	6,953.97	6,953.75	-0.22	6,938.55	15.20	ND	NA	7.32	6,946.43	NA	5 - 15
		11/28/17	2.00	6,953.97	6,953.75	-0.22	6,938.57	15.18	ND	NA	7.55	6,946.20	NA	5 - 15
		02/08/18	2.00	6,953.97	6,953.75	-0.22	6,938.55	15.20	ND	NA	8.18	6,945.57	NA	5 - 15
		04/25/18	2.00	6,953.97	6,953.75	-0.22	6,938.62	15.13	ND	NA	7.82	6,945.93	NA	5 - 15
		08/16/18	2.00	6,953.97	6,953.75	-0.22	6,938.55	15.20	ND	NA	8.30	6,945.45	NA	5 - 15
		11/19/18	2.00	6,953.97	6,953.75	-0.22	6,938.57	15.18	ND	NA	9.00	6,944.75	NA	5 - 15
		03/28/19	2.00	6,953.97	6,953.75	-0.22	6,938.55	15.20	NM	NA	NM	NA	NA	5 - 15
		06/05/19	2.00	6,953.97	6,953.75	-0.22	6,938.55	15.20	ND	NA	8.69	6,945.06	NA	5 - 15
		08/20/19	2.00	6,953.97	6,953.75	-0.22	6,938.55	15.20	ND	NA	9.04	6,944.71	NA	5 - 15
		11/04/19	2.00	6,953.97	6,953.75	-0.22	6,938.57	15.18	ND	NA	9.59	6,944.16	NA	5 - 15

TABLE 9.2
5-YEAR HISTORICAL DTB/DTW MEASUREMENTS FOR WELLS MKTF-01 THRU MKTF-50

Date of Installation	Well ID Number	Inspection or Sample Date	Casing Diameter (Inch)	Ground Level Elevation (ft)	Well Casing Rim Elevation (ft)	Stick-up length (ft)	Well Casing Bottom Elevation (ft)	Total Well Depth (ft)	Depth to SPH (ft)	SPH Column Thickness (ft)	Depth to Water (ft)	Ground-water Elevation (ft)	Corrected Water Table[1] Elevation (ft)	Screened Interval Depth Top to Bottom (ft)
11/13/14	MKTF-40	03/11/15	2.00	6,891.35	6,894.33	2.98	6,870.69	23.64	ND	NA	14.60	6,879.73	NA	5 - 20
		06/10/15	2.00	6,891.35	6,894.33	2.98	6,870.69	23.64	ND	NA	14.20	6,880.13	NA	5 - 20
		08/21/15	2.00	6,891.35	6,894.33	2.98	6,870.69	23.64	ND	NA	13.83	6,880.50	NA	5 - 20
		11/04/15	2.00	6,891.35	6,894.33	2.98	6,870.69	23.64	ND	NA	13.91	6,880.42	NA	5 - 20
		02/23/16	2.00	6,891.35	6,894.33	2.98	6,870.69	23.64	ND	NA	13.88	6,880.45	NA	5 - 20
		06/09/16	2.00	6,891.35	6,894.33	2.98	6,870.69	23.64	ND	NA	13.31	6,881.02	NA	5 - 20
		09/08/16	2.00	6,891.35	6,894.33	2.98	6,870.69	23.64	ND	NA	13.52	6,880.81	NA	5 - 20
		11/04/16	2.00	6,891.35	6,894.33	2.98	6,870.69	23.64	ND	NA	13.91	6,880.42	NA	5 - 20
		03/07/17	2.00	6,891.35	6,894.33	2.98	6,870.69	23.64	ND	NA	13.14	6,881.19	NA	5 - 20
		06/05/17	2.00	6,891.35	6,894.33	2.98	6,870.69	23.64	ND	NA	13.29	6,881.04	NA	5 - 20
		09/25/17	2.00	6,891.35	6,894.33	2.98	6,870.69	23.64	ND	NA	13.28	6,881.05	NA	5 - 20
		11/21/17	2.00	6,891.35	6,894.33	2.98	6,870.71	23.62	ND	NA	13.71	6,880.62	NA	5 - 20
		02/05/18	2.00	6,891.35	6,894.33	2.98	6,870.71	23.62	ND	NA	13.18	6,881.15	NA	5 - 20
		04/25/18	2.00	6,891.35	6,894.33	2.98	6,870.80	23.53	ND	NA	12.94	6,881.39	NA	5 - 20
		08/15/18	2.00	6,891.35	6,894.33	2.98	6,870.79	23.54	ND	NA	12.74	6,881.59	NA	5 - 20
		11/14/18	2.00	6,891.35	6,894.33	2.98	6,870.71	23.62	ND	NA	13.64	6,880.69	NA	5 - 20
		02/20/19	2.00	6,891.35	6,894.33	2.98	6,870.69	23.64	ND	NA	12.79	6,881.54	NA	5 - 20
		05/06/19	2.00	6,891.35	6,894.33	2.98	6,870.69	23.64	ND	NA	12.36	6,881.97	NA	5 - 20
		08/22/19	2.00	6,891.35	6,894.33	2.98	6,870.79	23.54	ND	NA	12.15	6,882.18	NA	5 - 20
		10/22/19	2.00	6,891.35	6,894.33	2.98	6,870.71	23.62	ND	NA	13.04	6,881.29	NA	5 - 20

TABLE 9.2
5-YEAR HISTORICAL DTB/DTW MEASUREMENTS FOR WELLS MKTF-01 THRU MKTF-50

Date of Installation	Well ID Number	Inspection or Sample Date	Casing Diameter (Inch)	Ground Level Elevation (ft)	Well Casing Rim Elevation (ft)	Stick-up length (ft)	Well Casing Bottom Elevation (ft)	Total Well Depth (ft)	Depth to SPH (ft)	SPH Column Thickness (ft)	Depth to Water (ft)	Ground-water Elevation (ft)	Corrected Water Table[1] Elevation (ft)	Screened Interval Depth Top to Bottom (ft)
11/14/14	MKTF-41	03/12/15	2.00	6,891.11	6,893.64	2.53	6,853.54	40.10	ND	NA	20.07	6,873.57	NA	22 - 37
		06/09/15	2.00	6,891.11	6,893.64	2.53	6,853.54	40.10	ND	NA	19.77	6,873.87	NA	22 - 37
		08/21/15	2.00	6,891.11	6,893.64	2.53	6,853.54	40.10	ND	NA	19.90	6,873.74	NA	22 - 37
		11/05/15	2.00	6,891.11	6,893.64	2.53	6,853.54	40.10	ND	NA	19.77	6,873.87	NA	22 - 37
		02/24/16	2.00	6,891.11	6,893.64	2.53	6,853.54	40.10	ND	NA	19.90	6,873.74	NA	22 - 37
		06/09/16	2.00	6,891.11	6,893.64	2.53	6,853.54	40.10	ND	NA	19.65	6,873.99	NA	22 - 37
		09/09/16	2.00	6,891.11	6,893.64	2.53	6,853.54	40.10	ND	NA	20.11	6,873.53	NA	22 - 37
		11/05/16	2.00	6,891.11	6,893.64	2.53	6,853.54	40.10	ND	NA	19.77	6,873.87	NA	22 - 37
		03/07/17	2.00	6,891.11	6,893.64	2.53	6,853.54	40.10	ND	NA	19.60	6,874.04	NA	22 - 37
		06/06/17	2.00	6,891.11	6,893.64	2.53	6,853.54	40.10	ND	NA	18.49	6,875.15	NA	22 - 37
		09/25/17	2.00	6,891.11	6,893.64	2.53	6,853.54	40.10	ND	NA	20.25	6,873.39	NA	22 - 37
		11/27/17	2.00	6,891.11	6,893.64	2.53	6,853.93	39.71	ND	NA	19.81	6,873.83	NA	22 - 37
		02/07/18	2.00	6,891.11	6,893.64	2.53	6,853.92	39.72	ND	NA	20.23	6,873.41	NA	22 - 37
		04/25/18	2.00	6,891.11	6,893.64	2.53	6,853.73	39.91	ND	NA	19.97	6,873.67	NA	22 - 37
		08/15/18	2.00	6,891.11	6,893.64	2.53	6,853.90	39.74	ND	NA	20.26	6,873.38	NA	22 - 37
		11/14/18	2.00	6,891.11	6,893.64	2.53	6,853.93	39.71	ND	NA	20.51	6,873.13	NA	22 - 37
		02/13/19	2.00	6,891.11	6,893.64	2.53	6,853.54	40.10	ND	NA	20.10	6,873.54	NA	22 - 37
		05/07/19	2.00	6,891.11	6,893.64	2.53	6,853.54	40.10	ND	NA	19.52	6,874.12	NA	22 - 37
		08/22/19	2.00	6,891.11	6,893.64	2.53	6,853.90	39.74	ND	NA	19.55	6,874.09	NA	22 - 37
		10/23/19	2.00	6,891.11	6,893.64	2.53	6,853.93	39.71	ND	NA	20.02	6,873.62	NA	22 - 37

TABLE 9.2
5-YEAR HISTORICAL DTB/DTW MEASUREMENTS FOR WELLS MKTF-01 THRU MKTF-50

Date of Installation	Well ID Number	Inspection or Sample Date	Casing Diameter (Inch)	Ground Level Elevation (ft)	Well Casing Rim Elevation (ft)	Stick-up length (ft)	Well Casing Bottom Elevation (ft)	Total Well Depth (ft)	Depth to SPH (ft)	SPH Column Thickness (ft)	Depth to Water (ft)	Ground-water Elevation (ft)	Corrected Water Table[1] Elevation (ft)	Screened Interval Depth Top to Bottom (ft)
11/12/14	MKTF-42	03/11/15	2.00	6,890.42	6,892.95	2.53	6,859.80	33.15	ND	NA	17.97	6,874.98	NA	10 - 30
		06/09/15	2.00	6,890.42	6,892.95	2.53	6,859.80	33.15	ND	NA	17.60	6,875.35	NA	10 - 30
		08/21/15	2.00	6,890.42	6,892.95	2.53	6,859.80	33.15	ND	NA	17.44	6,875.51	NA	10 - 30
		11/05/15	2.00	6,890.42	6,892.95	2.53	6,859.80	33.15	ND	NA	17.26	6,875.69	NA	10 - 30
		02/24/16	2.00	6,890.42	6,892.95	2.53	6,859.80	33.15	ND	NA	17.69	6,875.26	NA	10 - 30
		06/09/16	2.00	6,890.42	6,892.95	2.53	6,859.80	33.15	ND	NA	17.30	6,875.65	NA	10 - 30
		09/09/16	2.00	6,890.42	6,892.95	2.53	6,859.80	33.15	ND	NA	17.30	6,875.65	NA	10 - 30
		11/05/16	2.00	6,890.42	6,892.95	2.53	6,859.80	33.15	ND	NA	17.26	6,875.69	NA	10 - 30
		03/07/17	2.00	6,890.42	6,892.95	2.53	6,859.80	33.15	ND	NA	15.72	6,877.23	NA	10 - 30
		06/06/17	2.00	6,890.42	6,892.95	2.53	6,859.80	33.15	ND	NA	17.12	6,875.83	NA	10 - 30
		09/25/17	2.00	6,890.42	6,892.95	2.53	6,859.80	33.15	ND	NA	16.83	6,876.12	NA	10 - 30
		11/27/17	2.00	6,890.42	6,892.95	2.53	6,859.77	33.18	ND	NA	16.81	6,876.14	NA	10 - 30
		02/07/18	2.00	6,890.42	6,892.95	2.53	6,860.05	32.90	ND	NA	17.41	6,875.54	NA	10 - 30
		04/25/18	2.00	6,890.42	6,892.95	2.53	6,859.87	33.08	ND	NA	17.13	6,875.82	NA	10 - 30
		08/15/18	2.00	6,890.42	6,892.95	2.53	6,859.75	33.20	ND	NA	16.77	6,876.18	NA	10 - 30
		11/14/18	2.00	6,890.42	6,892.95	2.53	6,859.77	33.18	ND	NA	16.94	6,876.01	NA	10 - 30
		02/13/19	2.00	6,890.42	6,892.95	2.53	6,859.80	33.15	ND	NA	17.18	6,875.77	NA	10 - 30
		05/07/19	2.00	6,890.42	6,892.95	2.53	6,859.80	33.15	ND	NA	16.68	6,876.27	NA	10 - 30
		08/22/19	2.00	6,890.42	6,892.95	2.53	6,859.75	33.20	ND	NA	16.40	6,876.55	NA	10 - 30
		10/23/19	2.00	6,890.42	6,892.95	2.53	6,859.77	33.18	ND	NA	16.52	6,876.43	NA	10 - 30

TABLE 9.2
5-YEAR HISTORICAL DTB/DTW MEASUREMENTS FOR WELLS MKTF-01 THRU MKTF-50

Date of Installation	Well ID Number	Inspection or Sample Date	Casing Diameter (Inch)	Ground Level Elevation (ft)	Well Casing Rim Elevation (ft)	Stick-up length (ft)	Well Casing Bottom Elevation (ft)	Total Well Depth (ft)	Depth to SPH (ft)	SPH Column Thickness (ft)	Depth to Water (ft)	Ground-water Elevation (ft)	Corrected Water Table[1] Elevation (ft)	Screened Interval Depth Top to Bottom (ft)
11/11/14	MKTF-43	03/11/15	2.00	6,874.12	6,876.90	2.78	6,861.47	15.43	ND	NA	5.20	6,871.70	NA	2 - 12
		06/10/15	2.00	6,874.12	6,876.90	2.78	6,861.47	15.43	ND	NA	3.63	6,873.27	NA	2 - 12
		08/21/15	2.00	6,874.12	6,876.90	2.78	6,861.47	15.43	ND	NA	3.80	6,873.10	NA	2 - 12
		11/05/15	2.00	6,874.12	6,876.90	2.78	6,861.47	15.43	ND	NA	5.12	6,871.78	NA	2 - 12
		02/24/16	2.00	6,874.12	6,876.90	2.78	6,861.47	15.43	ND	NA	5.00	6,871.90	NA	2 - 12
		06/09/16	2.00	6,874.12	6,876.90	2.78	6,861.47	15.43	ND	NA	3.67	6,873.23	NA	2 - 12
		09/09/16	2.00	6,874.12	6,876.90	2.78	6,861.47	15.43	ND	NA	3.98	6,872.92	NA	2 - 12
		11/05/16	2.00	6,874.12	6,876.90	2.78	6,861.47	15.43	ND	NA	5.12	6,871.78	NA	2 - 12
		03/08/17	2.00	6,874.12	6,876.90	2.78	6,861.47	15.43	ND	NA	5.34	6,871.56	NA	2 - 12
		06/06/17	2.00	6,874.12	6,876.90	2.78	6,861.47	15.43	ND	NA	3.62	6,873.28	NA	2 - 12
		09/25/17	2.00	6,874.12	6,876.90	2.78	6,861.47	15.43	ND	NA	4.14	6,872.76	NA	2 - 12
		11/27/17	2.00	6,874.12	6,876.90	2.78	6,861.52	15.38	ND	NA	5.65	6,871.25	NA	2 - 12
		02/07/18	2.00	6,874.12	6,876.90	2.78	6,861.52	15.38	ND	NA	6.43	6,870.47	NA	2 - 12
		04/25/18	2.00	6,874.12	6,876.90	2.78	6,861.60	15.30	ND	NA	5.05	6,871.85	NA	2 - 12
		08/15/18	2.00	6,874.12	6,876.90	2.78	6,861.49	15.41	ND	NA	2.66	6,874.24	NA	2 - 12
		11/14/18	2.00	6,874.12	6,876.90	2.78	6,861.52	15.38	ND	NA	5.42	6,871.48	NA	2 - 12
		02/13/19	2.00	6,874.12	6,876.90	2.78	6,861.47	15.43	ND	NA	5.99	6,870.91	NA	2 - 12
		05/08/19	2.00	6,874.12	6,876.90	2.78	6,861.47	15.43	ND	NA	3.97	6,872.93	NA	2 - 12
		08/22/19	2.00	6,874.12	6,876.90	2.78	6,861.49	15.41	ND	NA	3.67	6,873.23	NA	2 - 12
		10/24/19	2.00	6,874.12	6,876.90	2.78	6,861.52	15.38	ND	NA	4.34	6,872.56	NA	2 - 12

TABLE 9.2
5-YEAR HISTORICAL DTB/DTW MEASUREMENTS FOR WELLS MKTF-01 THRU MKTF-50

Date of Installation	Well ID Number	Inspection or Sample Date	Casing Diameter (Inch)	Ground Level Elevation (ft)	Well Casing Rim Elevation (ft)	Stick-up length (ft)	Well Casing Bottom Elevation (ft)	Total Well Depth (ft)	Depth to SPH (ft)	SPH Column Thickness (ft)	Depth to Water (ft)	Ground-water Elevation (ft)	Corrected Water Table[1] Elevation (ft)	Screened Interval Depth Top to Bottom (ft)
11/11/14	MKTF-44	03/12/15	2.00	6,867.41	6,869.95	2.54	6,818.80	51.15	ND	NA	38.44	6,831.51	NA	38 - 48
		06/10/15	2.00	6,867.41	6,869.95	2.54	6,818.80	51.15	ND	NA	29.55	6,840.40	NA	38 - 48
		08/17/15	2.00	6,867.41	6,869.95	2.54	6,818.80	51.15	ND	NA	31.23	6,838.72	NA	38 - 48
		11/09/15	2.00	6,867.41	6,869.95	2.54	6,818.80	51.15	ND	NA	33.32	6,836.63	NA	38 - 48
		02/24/16	2.00	6,867.41	6,869.95	2.54	6,818.80	51.15	ND	NA	28.74	6,841.21	NA	38 - 48
		06/09/16	2.00	6,867.41	6,869.95	2.54	6,818.80	51.15	ND	NA	27.83	6,842.12	NA	38 - 48
		09/08/16	2.00	6,867.41	6,869.95	2.54	6,818.80	51.15	ND	NA	31.34	6,838.61	NA	38 - 48
		11/09/16	2.00	6,867.41	6,869.95	2.54	6,818.80	51.15	ND	NA	33.32	6,836.63	NA	38 - 48
		03/08/17	2.00	6,867.41	6,869.95	2.54	6,818.80	51.15	ND	NA	25.39	6,844.56	NA	38 - 48
		06/05/17	2.00	6,867.41	6,869.95	2.54	6,818.80	51.15	ND	NA	32.90	6,837.05	NA	38 - 48
		09/25/17	2.00	6,867.41	6,869.95	2.54	6,818.80	51.15	ND	NA	30.18	6,839.77	NA	38 - 48
		11/27/17	2.00	6,867.41	6,869.95	2.54	6,818.79	51.16	ND	NA	33.70	6,836.25	NA	38 - 48
		02/07/18	2.00	6,867.41	6,869.95	2.54	6,818.79	51.16	ND	NA	37.56	6,832.39	NA	38 - 48
		04/25/18	2.00	6,867.41	6,869.95	2.54	6,818.87	51.08	ND	NA	36.72	6,833.23	NA	38 - 48
		08/15/18	2.00	6,867.41	6,869.95	2.54	6,818.75	51.20	ND	NA	35.70	6,834.25	NA	38 - 48
		11/14/18	2.00	6,867.41	6,869.95	2.54	6,818.79	51.16	ND	NA	26.42	6,843.53	NA	38 - 48
		02/13/19	2.00	6,867.41	6,869.95	2.54	6,818.80	51.15	ND	NA	33.39	6,836.56	NA	38 - 48
		05/08/19	2.00	6,867.41	6,869.95	2.54	6,818.80	51.15	ND	NA	34.20	6,835.75	NA	38 - 48
		08/22/19	2.00	6,867.41	6,869.95	2.54	6,818.75	51.20	ND	NA	30.96	6,838.99	NA	38 - 48
		10/24/19	2.00	6,867.41	6,869.95	2.54	6,818.79	51.16	ND	NA	38.54	6,831.41	NA	38 - 48

TABLE 9.2
5-YEAR HISTORICAL DTB/DTW MEASUREMENTS FOR WELLS MKTF-01 THRU MKTF-50

Date of Installation	Well ID Number	Inspection or Sample Date	Casing Diameter (Inch)	Ground Level Elevation (ft)	Well Casing Rim Elevation (ft)	Stick-up length (ft)	Well Casing Bottom Elevation (ft)	Total Well Depth (ft)	Depth to SPH (ft)	SPH Column Thickness (ft)	Depth to Water (ft)	Ground-water Elevation (ft)	Corrected Water Table[1] Elevation (ft)	Screened Interval Depth Top to Bottom (ft)
Pre-existing	MKTF-45	02/10/15	4.00	6,948.63	6,949.59	0.96	6,919.35	30.24	13.58	2.94	16.52	6,933.07	6,935.42	Unknown
		03/17/15	4.00	6,948.63	6,949.59	0.96	6,919.35	30.24	13.14	1.80	14.94	6,934.65	6,936.09	Unknown
		06/08/15	4.00	6,948.63	6,949.59	0.96	6,919.35	30.24	13.20	3.55	16.75	6,932.84	6,935.68	Unknown
		08/18/15	4.00	6,948.63	6,949.59	0.96	6,919.35	30.24	13.50	0.11	13.61	6,935.98	6,936.07	Unknown
		11/03/15	4.00	6,948.63	6,949.59	0.96	6,919.35	30.24	13.70	0.32	14.02	6,935.57	6,935.83	Unknown
		03/17/16	4.00	6,948.63	6,949.59	0.96	6,919.35	30.24	13.14	1.80	14.94	6,934.65	6,936.09	Unknown
		06/10/16	4.00	6,948.63	6,949.59	0.96	6,919.35	30.24	12.48	0.32	12.80	6,936.79	6,937.05	Unknown
		09/13/16	4.00	6,948.63	6,949.59	0.96	6,919.35	30.24	11.95	0.45	12.40	6,937.19	6,937.55	Unknown
		11/03/16	4.00	6,948.63	6,949.59	0.96	6,919.35	30.24	13.70	0.32	14.02	6,935.57	6,935.83	Unknown
		03/01/17	4.00	6,948.63	6,949.59	0.96	6,919.35	30.24	10.32	0.31	10.63	6,938.96	6,939.21	Unknown
		06/14/17	4.00	6,948.63	6,949.59	0.96	6,919.35	30.24	11.50	0.50	12.00	6,937.59	6,937.99	Unknown
		10/03/17	4.00	6,948.63	6,949.59	0.96	6,919.35	30.24	11.48	0.53	12.01	6,937.58	6,938.00	Unknown
		11/30/17	4.00	6,948.63	6,949.59	0.96	6,919.35	30.24	12.76	0.47	13.23	6,936.36	6,936.74	Unknown
		02/15/18	4.00	6,948.63	6,949.59	0.96	6,919.35	30.24	13.09	0.15	13.24	6,936.35	6,936.47	Unknown
		04/26/18	4.00	6,948.63	6,949.59	0.96	6,919.31	30.28	12.87	0.43	13.30	6,936.29	6,936.63	Unknown
		08/16/18	4.00	6,948.63	6,949.59	0.96	6,919.26	30.33	13.15	0.43	13.58	6,936.01	6,936.35	Unknown
		11/27/18	4.00	6,948.63	6,949.59	0.96	6,919.35	30.24	13.60	0.55	14.15	6,935.44	6,935.88	Unknown
		03/26/19	4.00	6,948.63	6,949.59	0.96	6,919.35	30.24	12.00	0.50	12.50	6,937.09	6,937.49	Unknown
		05/14/19	4.00	6,948.63	6,949.59	0.96	6,919.35	30.24	12.43	0.59	13.02	6,936.57	6,937.04	Unknown
		08/19/19	4.00	6,948.63	6,949.59	0.96	6,919.26	30.33	14.02	0.46	14.48	6,935.11	6,935.48	Unknown
		10/28/19	4.00	6,948.63	6,949.59	0.96	6,919.35	30.24	11.97	1.03	13.00	6,936.59	6,937.41	Unknown
		10/29/19	4.00	6,948.63	6,949.59	0.96	6,919.35	30.24	11.38	2.37	13.75	6,935.84	6,937.74	Unknown
		10/31/18	4.00	6,948.63	6,949.59	0.96	6,919.35	30.24	10.66	6.24	16.90	6,932.69	6,937.68	Unknown
		11/06/19	4.00	6,948.63	6,949.59	0.96	6,919.35	30.24	9.57	12.95	22.52	6,927.07	6,937.43	Unknown
		11/07/19	4.00	6,948.63	6,949.59	0.96	6,919.35	30.24	9.00	13.25	22.25	6,927.34	6,937.94	Unknown
		11/11/19	4.00	6,948.63	6,949.59	0.96	6,919.35	30.24	8.75	14.85	23.60	6,925.99	6,937.87	Unknown
		11/12/19	4.00	6,948.63	6,949.59	0.96	6,919.35	30.24	9.62	14.30	23.92	6,925.67	6,937.11	Unknown
		11/13/19	4.00	6,948.63	6,949.59	0.96	6,919.35	30.24	9.70	16.23	25.93	6,923.66	6,936.64	Unknown
		11/14/19	4.00	6,948.63	6,949.59	0.96	6,919.35	30.24	10.06	15.23	25.29	6,924.30	6,936.48	Unknown
		11/15/19	4.00	6,948.63	6,949.59	0.96	6,919.35	30.24	10.28	14.29	24.57	6,925.02	6,936.45	Unknown
		11/19/19	4.00	6,948.63	6,949.59	0.96	6,919.35	30.24	10.84	11.91	22.75	6,926.84	6,936.37	Unknown
		11/21/19	4.00	6,948.63	6,949.59	0.96	6,919.35	30.24	11.00	10.90	21.90	6,927.69	6,936.41	Unknown
		12/02/19	4.00	6,948.63	6,949.59	0.96	6,919.35	30.24	12.38	6.57	18.95	6,930.64	6,935.90	Unknown

TABLE 9.2
5-YEAR HISTORICAL DTB/DTW MEASUREMENTS FOR WELLS MKTF-01 THRU MKTF-50

Date of Installation	Well ID Number	Inspection or Sample Date	Casing Diameter (Inch)	Ground Level Elevation (ft)	Well Casing Rim Elevation (ft)	Stick-up length (ft)	Well Casing Bottom Elevation (ft)	Total Well Depth (ft)	Depth to SPH (ft)	SPH Column Thickness (ft)	Depth to Water (ft)	Ground-water Elevation (ft)	Corrected Water Table[1] Elevation (ft)	Screened Interval Depth Top to Bottom (ft)
10/12/19	MKTF-46	10/29/19	2.00	6,954.73	6,957.60	2.87	6,936.31	21.29	ND	NA	10.28	6,947.32	NA	3 - 18
		11/12/19	2.00	6,954.73	6,957.60	2.87	6,936.31	21.29	ND	NA	10.46	6,947.14	NA	3 - 18
		12/02/19	2.00	6,954.73	6,957.60	2.87	6,936.31	21.29	ND	NA	10.70	6,946.90	NA	3 - 18
10/14/19	MKTF-47	12/02/19	2.00	6,959.51	6,959.09	-0.42	6,944.79	14.30	ND	NA	9.78	6,949.31	NA	4 - 14
10/14/19	MKTF-48	12/02/19	2.00	6,959.24	6,961.73	2.49	6,940.81	20.92	ND	NA	11.85	6,949.88	NA	2 - 17
10/15/19	MKTF-49	12/03/19	2.00	6,944.00	6,946.76	2.76	6,921.86	24.90	ND	NA	19.90	6,926.86	NA	5 - 25
10/16/19	MKTF-50	12/03/19	2.00	6,939.68	6,942.82	3.14	6,921.17	21.65	ND	NA	15.61	6,927.21	NA	3 - 18

DEFINITIONS:

DTB - Depth to Bottom
DTW - Depth to Water
SPH = Separate Phase Hydrocarbons

NA = Not Applicable
NM = Not Measured
Negative number in Stick up Length column indicates well is flushmount and located at or below ground level.
Depth to Water Column - if 0.00 is indicated - means water is at top of casing (full) under artesian flow conditions.
Dry indicates no water was detected.

NOTES:

1. Corrected Water Table Elevation applies only if SPH thickness column measurement exists. (0.8 X SPH thickness + Groundwater Elevation)

11/29/18 - Not able to locate well to gauge or sample.

ATTACHMENT C

NAPIS INSPECTION REPORT REPLACEMENT PAGES

Trihydro CORPORATION

December 17, 2021

Mr. John Moore, P.E.
Environmental Supervisor
Marathon Petroleum Corporation
El Paso and Gallup Refineries

RE: NAPIS Inspection - Summary of Findings
Marathon Petroleum Company Gallup Refinery Division

Dear Mr. Moore:

Trihydro Corporation (Trihydro) has prepared this letter report summarizing our findings to date on potential leaking of the new American Petroleum Institute oil/water separator (NAPIS) at the Gallup refinery. This summary incorporates data and observations from the following chronological events:

- May 12, 2021, to present. The NAPIS East Bay was emptied on May 12, 2021. Inspections have been performed periodically to document ongoing conditions. The task was performed to address the potential for communication between the East Bay and the surrounding groundwater environment. Drawings illustrating the configuration of the NAPIS and LDUs are included in Attachment 1. Siemens Issued for Construction (IFC) Drawing 42400-100 shows the NAPIS in plan view. API Separator No. 1 represents the West Bay of the unit; API Separator No. 2 represents the East Bay. Siemens IFC Drawing 42400-106 provides a cross-section view of the East Bay.
- May 26, 2021, to present. Leak detection unit (LDU) East and West standpipes were evacuated (by vac truck) and monitoring of LDU recharge level and rate was conducted. This activity was performed to evaluate the potential for leakage to/from the NAPIS to the LDUs and also potential for communication between the LDUs and groundwater.
- June 9, 2021. Onsite inspection of NAPIS, including measurement of key dimensions and visual inspection of the empty East Bay for corrosion.
- Historical analytical data from groundwater sampling of wells adjacent to the NAPIS was compared to analysis of water samples collected from the East and West LDUs.

Findings and associated conclusions for these events are presented below. A summary of the NAPIS construction is provided. A cross section of the area, including the NAPIS and solid waste management unit (SWMU) 1, is shown in Figure 1. This figure also includes historical water levels from local monitoring wells. This topographical data is based on an unmanned aerial survey flight conducted in November 2018.

1252 Commerce Drive | Laramie, WY 82070 | phone 307/745.7474 | fax 307/745.7729 | www.trihydro.com

SUMMARY OF NAPIS CONSTRUCTION

The NAPIS was constructed with two concrete treatment bays (East and West) that provide redundancy for continuous operations of the oil/water separator system. The NAPIS bays were retrofitted in 2007 with a 60 – 100 mil Pelseal (fluoroelastomer) coating applied to the concrete followed by installation of a 3/16-inch (") stainless steel (SS) liner. A 3/8" interstitial space separates the steel liner from the concrete wall as detailed on Siemens IFC drawing 42400-109, Detail P; and drawing 42400-110 (attached), Detail R and Section U-U'. This interstitial space is monitored by the LDU for each respective bay. The LDU's are called out on drawings 42400-100 and 105 (plan views) and in detail on drawing 42400-109 (Detail L) all of which are included in Attachment 1. As built drawings of this work were not developed.

EAST BAY NAPIS PERIODIC INSPECTIONS

The East Bay of the NAPIS was removed from service and all liquids pumped out on May 12, 2021. The East Bay has been inspected periodically to document the presence/absence of fluids within the bay. Observations indicate that the bay has been dry since it was removed from service on May 12. Several photographs of the East Bay and corresponding dates are shown in Attachment 2.

LDU EVACUATION AND RECHARGE TEST

On May 26, 2021, a recharge test began in the LDUs to evaluate the potential for water migration between the API bays, the LDUs and groundwater. At the start of the test, the West Bay was full to a depth of 33.25" below the wall height, which is the normal operations depth of the NAPIS based on available design drawings. The East Bay was empty. These conditions remained largely unchanged since the start of the test.

Water levels within the LDU standpipes were recorded prior to evacuation of the water from the using a vacuum truck. Each LDU was evacuated 3 times in 15 minutes, at which point the LDUs were allowed to recharge, with periodic depth to water (DTW) measurements conducted until June 14, 2021.

Table 1 summarizes the recharge test data. Within the table, data are provided that include the water level data in the LDUs with respect to the top of casing of the standpipes, below ground surface at the NAPIS, and below wall height of the NAPIS. Figure 2 presents a graph of the water levels in the LDUs as a function of elapsed time.

Table 2 presents the calculated recharge rate in gallons per minute and milliliters/min (mL/min), based on the water levels in the LDUs presented in Table 1. Figure 3 presents a combined view of the historical water levels in monitoring wells adjacent to the NAPIS, and also includes the graph of water levels shown in Figure 2.

ONSITE INSPECTION OF THE NAPIS

On June 9, 2021, Trihydro engineers conducted a site visit to inspect the NAPIS and conduct measurements of the LDUs and related dimensions. Visual observation of the NAPIS empty East Bay was conducted with the aid of binoculars to assess the general condition of the side walls and penetrations. Findings include:

- Intake pipe penetrations appear sound with welds observed to be in good condition.
- Generalized wall scaling was evident which makes evaluation of wall integrity difficult.

An area of pitting corrosion and a hole approximately 1/8" in diameter was observed in one spot on the north end of the water side of the East Bay, approximately at the typical water line (1.8 feet [ft]) from the top of the NAPI. Penetration through the 3/16" stainless steel liner to the concrete was evident. Photographs of this area are included in Attachment 2.

COMPARISON OF LDU AND NAPIS WELLS HISTORICAL ANALYTICAL DATA

LDU standpipes (LDU-East and LDU-West) and monitoring wells in the immediate vicinity of the NAPIS (NAPIS-1, NAPIS-2, NAPIS-3 and KA-3) are sampled as part of the groundwater monitoring program at the Refinery. Attachment 3 presents selected tables from the 2019 Annual Groundwater Monitoring Report for the LDUs and NAPIS wells. Analytes included volatile organic compounds, semi-volatile organic compounds, and metals. Several observed trends included higher concentrations of analytes in the LDU standpipes versus NAPIS monitoring wells, including BTEX constituents. Manganese and chromium, which are components of stainless steel. Chromium is present in the LDUs versus largely absent in the surrounding NAPIS wells while manganese concentrations in the LDUs are much higher than those in NAPIS-2. This indicates that water samples collected from the LDU standpipes contain higher concentrations of water which is exposed to the SS liner and conversely that associated impacts to groundwater are not present.

EVALUATION FINDINGS

Following assessment of the NAPIS and a review of collected data, several findings are evident:

1. As shown in Figure 3, initial (time zero) water levels in the LDU standpipes are above historical (2011-2020) local groundwater levels (minimum, maximum and average). Therefore, groundwater is not moving into the LDUs due to the higher head within the LDUs during typical operations.
2. The observed water levels within the East LDU indicates some minor recharge of water within the LDU (Figure 2) following evacuation of the bay on May 26, 2021. As was noted previously, a small hole was observed in the north wall of the East Bay. This hole (or potentially others that were not noted during the initial inspection) may have allowed water to migrate into the interstitial space between the SS liner and the coated concrete containment wall during normal operations. Any water

within the interstitial space will make its way into the LDU as designed. The leveling of the recharge curve indicates that the draining of the interstitial water is largely complete. In addition, the recharge level within the LDU has stabilized below local groundwater as shown by the historical ranges for the nearby wells. A leak within the LDU would result in a continued increase in the recharge level to equilibrium with the surrounding groundwater level. Therefore, the data suggests that there is no hydraulic communication the NAPIS East Bay and the surrounding groundwater.

3. Similarly, the water level in the West LDU indicated some drainage from the interstitial space following evacuation of fluids. However, the West Bay continues to operate at normal water levels. The recharge rate of the West LDU is somewhat higher than that of the East LDU (Table 1 and Figure 2). It is possible that the West Bay contains some minor imperfections that permit water flow into the West LDU. However, close inspection of the unit was not possible due to ongoing operations. With the West Bay operational and full of water and the East Bay out of operation and empty, this suggests that the higher water level and greater head in the West Bay is driving the higher West LDU water levels, and is also driving the relatively higher recharge rates shown in Table 2.
4. The West LDU recharge rate over the period June 2 to June 8, 2021 (148.7 hours) was 0.16 mL/min, or a total of 1.4 liters. The East LDU recharge rate over the same period was 0.03 mL/min, or a total of 0.27 liters. These rates and cumulative totals were based on the level changes in the LDU standpipes over that period. Therefore, there does appear to be leakage through the SS liners on both NAPIS bays. As shown in Table 2, these leakage rates are extremely low.
5. If the West LDU water level returns to the level of water within the West Bay NAPIS, the evidence for the absence of a leak from the West LDU and NAPIS West bay into groundwater is stronger. Additional recharge time will be required to assess this trend.
6. Several analytes including manganese and chromium are elevated in the LDU standpipes relative to the NAPIS monitoring wells. These analytes are components of stainless steel, of which the NAPIS liner was constructed. This also suggests that groundwater is not a source for the water detected in the LDUs. Alternatively, the absence of chromium in NAPIS monitoring wells suggests that the LDU's are not leaking to area groundwater.

CONCLUSIONS

1. The current data suggest that there is no leakage from the NAPIS or LDUs into groundwater. The chromium historical analytical data for the LDU and NAPIS monitoring wells underscores this conclusion.
2. There is evidence for a low rate of leakage through the SS liner into the interstitial space of both the East and West Bay of the NAPIS. Observed corrosion in the East Bay SS liner supports this conclusion. The addition of a polyurethane coating on the concrete walls prior to installation of the SS liner prevents leakage into groundwater.

Received by OCD: 12/16/2021 8:08:27 AM

3. A program of NAPIS SS liner inspection and maintenance may be considered to reduce the potential for migration of water from the bays into the LDUs.

If you have any questions, please do not hesitate to contact us at (307) 745-7474.

Sincerely,
Trihydro Corporation

Heidi Jones
Client Manager

697-067-002

Attachments

cc: Ms. Kateri Luka

Released to Imaging: 11/23/2022 9:27:32 AM

FIGURE

Page 305 of 514

Outline added for notations related to primary and secondary containment.

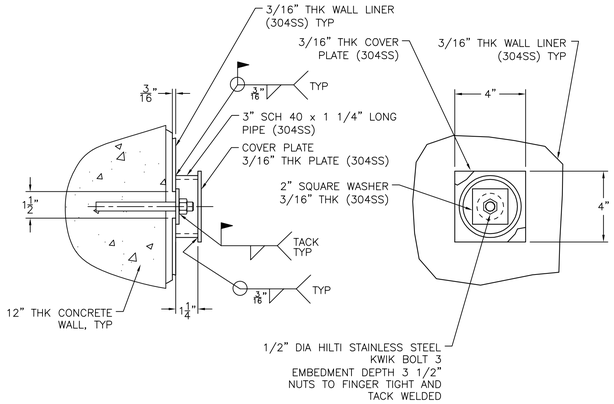

DETAIL Q
SEALED EXPANDABLE ANCHOR
SCALE: 3"=1'-0"
(REF DRAWING 42400-106)

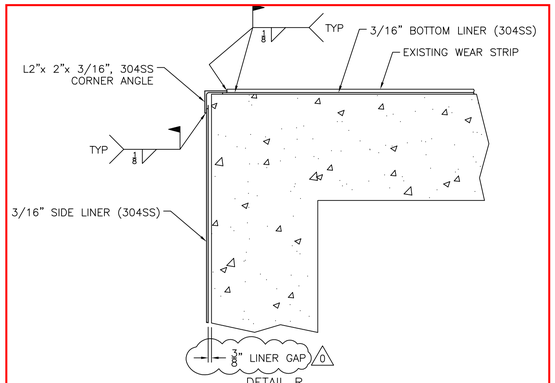

DETAIL R
API OUTSIDE CORNER
(REF DRAWING 42400-106)

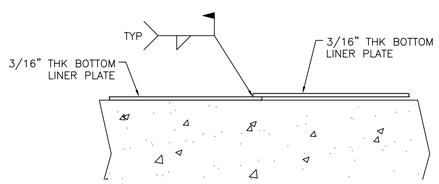

DETAIL S
API FLOOR LINER PLATE
SCALE: 3"=1'-0"
(REF DRAWING 42400-106)

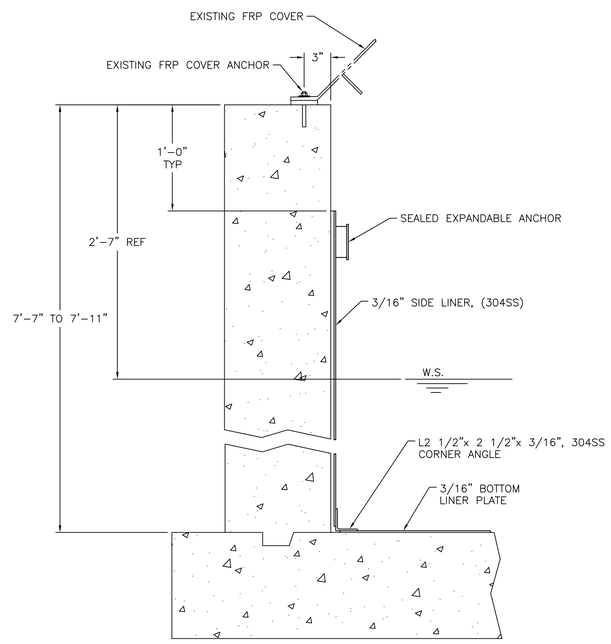

SECTION T-T
API INSIDE CORNER
(REF DRAWING 42400-105)

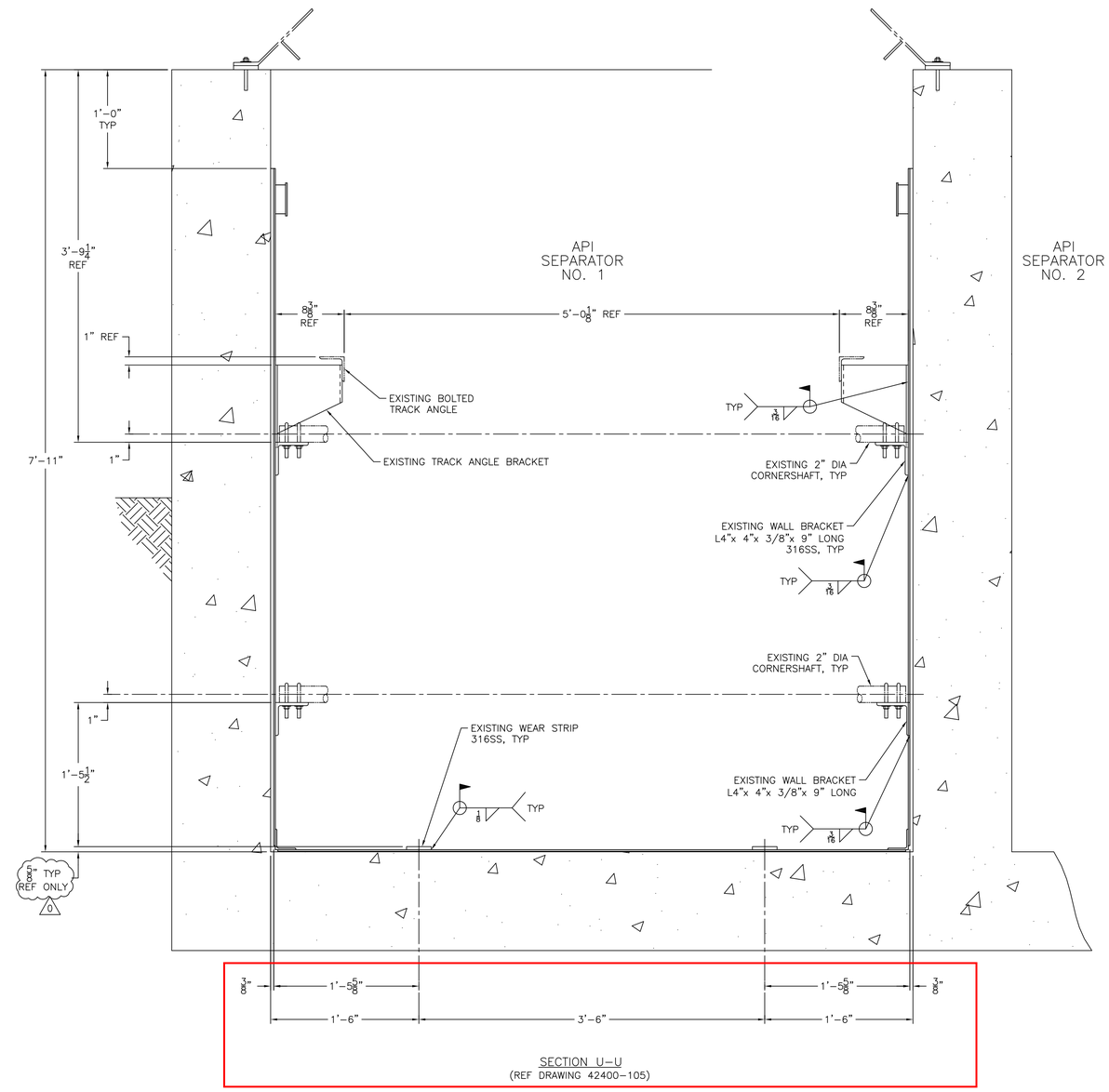

SECTION U-U
(REF DRAWING 42400-105)

REV	DESCRIPTION	DATE	DWN	CHKD	APVD	ECN
0	ISSUED FRO CONSTRUCTION REVISED PER 06/06/07 SITE MEETING	06/12/07	DJS	JLF	JLF	
A	ISSUED FOR APPROVAL AND INTERNAL REVIEW	05/22/07	DJS	JLF	JLF	

STD: 1-0200-24X36D1 | INTL REF: | BAR = 1" AT PLOT SCALE

COMPANY CONFIDENTIAL
THIS DOCUMENT AND ALL INFORMATION CONTAINED HEREIN ARE THE PROPERTY OF SIEMENS AND/OR ITS AFFILIATES. THE DESIGN CONCEPTS AND INFORMATION CONTAINED HEREIN ARE PROPRIETARY TO SIEMENS AND ARE SUBMITTED IN CONFIDENCE. THEY ARE NOT TRANSFERABLE AND MUST BE USED ONLY FOR THE PURPOSE FOR WHICH THE DOCUMENT IS EXPRESSLY LOANED. THEY MUST NOT BE DISCLOSED, REPRODUCED, LOANED OR USED IN ANY OTHER MANNER WITHOUT THE EXPRESS WRITTEN CONSENT OF SIEMENS. IN NO EVENT SHALL THEY BE USED IN ANY MANNER DETRIMENTAL TO THE INTEREST OF SIEMENS. ALL PATENT RIGHTS ARE RESERVED. UPON THE DEMAND OF SIEMENS, THIS DOCUMENT, ALONG WITH ALL COPIES AND EXTRACTS, AND ALL RELATED NOTES AND ANALYSES, MUST BE RETURNED TO SIEMENS OR DESTROYED, AS INSTRUCTED BY SIEMENS. ACCEPTANCE OF THE DELIVERY OF THIS DOCUMENT CONSTITUTES AGREEMENT TO THESE TERMS AND CONDITIONS.

	DATE
DESIGNER DJS	05/02/07
CHECKER JLF	05/11/07
ENGINEER	DATE
MANAGER JLF	05/11/07
FILE:	
SCALE: 1 1/2"=1'-0"	

TITLE GENERAL ARRANGEMENT
API SEPARATOR LINER DETAILS AND SECTIONS

CLIENT GIANT INDUSTRIES, INC
CINIZA REFINERY, GALLUP, NM

SIEMENS Water Technologies
WAUKESHA, WI
262-547-0141

PROJECT	CODE	DRAWING	SHEET	REV
S00062		42400-110	1 OF 1	A

Received by OCD: 12/16/2021 8:08:27 AM
Released to Imaging: 11/23/2022 9:27:32 AM

ATTACHMENT D

ELECTRONIC RED-LINE/STRIKE-OUT NAPIS INSPECTION REPORT

ELECTRONIC NAPIS INSPECTION REPORT

ELECTRONIC 2019 GROUNDWATER REPORT REPLACEMENT TABLES

(PLEASE SEE ATTACHED CD)

Trihydro CORPORATION

~~November 29~~~~July 9~~December 17, 2021

Mr. John Moore, P.E.
Environmental Supervisor
Marathon Petroleum Corporation
El Paso and Gallup Refineries

RE: NAPIS Inspection - Summary of Findings
Marathon Petroleum Company Gallup Refinery Division

Dear Mr. Moore:

Trihydro Corporation (Trihydro) has prepared this letter report summarizing our findings to date on potential leaking of the new American Petroleum Institute oil/water separator (NAPIS) at the Gallup refinery. This summary incorporates data and observations from the following chronological events:

- May 12, 2021, to present. The NAPIS East Bay was emptied on May 12, 2021. Inspections have been performed periodically to document ongoing conditions. The task was performed to address the potential for communication between the East Bay and the surrounding groundwater environment. Drawings illustrating the configuration of the NAPIS and LDUs are included in Attachment 1. Siemens Issued for Construction (IFC) Drawing 42400-100 shows the NAPIS in plan view. API Separator No. 1 represents the West Bay of the unit; API Separator No. 2 represents the East Bay. Siemens IFC Drawing 42400-106 provides a cross-section view of the East Bay.
- May 26, 2021, to present. Leak detection unit (LDU) East and West ~~monitoring wells~~standpipes were evacuated (by vac truck) and monitoring of LDU recharge level and rate was conducted. This activity was performed to evaluate the potential for leakage to/from the NAPIS to the LDUs and also potential for communication between the LDUs and groundwater.
- June 9, 2021. Onsite inspection of NAPIS, including measurement of key dimensions and visual inspection of the empty East Bay for corrosion.
- Historical analytical data from groundwater sampling of wells adjacent to the NAPIS was compared to analysis of water samples collected from the East and West LDUs.

Findings and associated conclusions for these events are presented below. A summary of the NAPIS construction is provided. A cross section of the area, including the NAPIS and solid waste management unit (SWMU) 1, is shown in Figure 1. This figure also includes historical water levels from local monitoring wells. This topographical data is based on an unmanned aerial survey flight conducted in November 2018.

SUMMARY OF NAPIS CONSTRUCTION

The NAPIS was constructed with two concrete treatment bays (East and West) that provide redundancy for continuous operations of the oil/water separator system. The NAPIS bays were retrofitted in 2007 with a 60 – 100 mil Pelseal (~~polyurethane~~fluoroelastomer) coating applied to the concrete followed by installation of a 3/16-inch (") stainless steel ~~grade 316~~ (SS~~-316~~) liner. A 3/8" interstitial space separates the steel liner from the concrete wall as detailed on Siemens IFC drawing 42400-109, Detail P; and drawing 42400-110 (attached), Detail R and Section U-U'. This interstitial space is monitored by the LDU for each respective bay. The LDU's are called out on ~~Siemens IFC~~ drawings 42400-100 and 105 (plan views) and in detail on drawing 42400-109 (Detail L) all of which are included in Attachment 1. As built drawings of this work were not developed.

EAST BAY NAPIS PERIODIC INSPECTIONS

The East Bay of the NAPIS was removed from service and all liquids pumped out on May 12, 2021. The East Bay has been inspected periodically to document the presence/absence of fluids within the bay. Observations indicate that the bay has been dry since it was removed from service on May 12. Several photographs of the East Bay and corresponding dates are shown in Attachment 2.

LDU EVACUATION AND RECHARGE TEST

On May 26, 2021, a recharge test began in the LDUs to evaluate the potential for water migration between the API bays, the LDUs and groundwater. At the start of the test, the West Bay was full to a depth of 33.25" below the wall height, which is the normal operations depth of the NAPIS based on available design drawings. The East Bay was empty. These conditions remained largely unchanged since the start of the test.

Water levels within the LDU standpipes~~monitoring wells~~ were recorded prior to evacuation of the water from the ~~monitoring wells~~ using a vacuum truck. Each LDU was evacuated 3 times in 15 minutes, at which point the LDUs were allowed to recharge, with periodic depth to water (DTW) measurements conducted until June 14, 2021.

Table 1 summarizes the recharge test data. Within the table, data are provided that include the water level data in the LDUs with respect to the top of casing of the ~~monitoring wells~~standpipes, below ground surface at the NAPIS, and below wall height of the NAPIS. Figure 2 presents a graph of the water levels in the LDUs as a function of elapsed time.

Table 2 presents the calculated recharge rate in gallons per minute and milliliters/min (mL/min), based on the water levels in the LDUs presented in Table 1. Figure 3 presents a combined view of the historical water levels in monitoring wells adjacent to the NAPIS, and also includes the graph of water levels shown in Figure 2.

ONSITE INSPECTION OF THE NAPIS

On June 9, 2021, Trihydro engineers conducted a site visit to inspect the NAPIS and conduct measurements of the LDUs and related dimensions. Visual observation of the NAPIS empty East Bay was conducted with the aid of binoculars to assess the general condition of the side walls and penetrations. Findings include:

- Intake pipe penetrations appear sound with welds observed to be in good condition.
- Generalized wall scaling was evident which makes evaluation of wall integrity difficult.

An area of pitting corrosion and a hole approximately 1/8" in diameter was observed in one spot on the north end of the water side of the East Bay, approximately at the typical water line (1.8 feet [ft]) from the top of the NAPI. Penetration through the 3/16" stainless steel liner to the concrete was evident. Photographs of this area are included in Attachment ~~B~~2.

COMPARISON OF LDU AND NAPIS WELLS HISTORICAL ANALYTICAL DATA

LDU standpipes~~s~~ (LDU-East and LDU-West) and monitoring wells in the immediate vicinity of the NAPIS (NAPIS-1, NAPIS-2, NAPIS-3 and KA-3) are sampled as part of the groundwater monitoring program at the Refinery. Attachment 3 presents selected tables from the 2019 Annual Groundwater Monitoring Report for the LDUs and NAPIS wells. Analytes included volatile organic compounds, semi-volatile organic compounds, and metals. Several observed trends included higher concentrations of analytes in the LDU standpipes versus NAPIS monitoring wells, including BTEX constituents. Manganese and chromium, which are components of stainless steel. Chromium is present in the LDUs versus largely absent in the surrounding NAPIS wells while manganese concentrations in the LDUs are much higher than those in NAPIS-2. This indicates that water samples collected from the LDU standpipes~~s~~ contain higher concentrations of water which is exposed to the SS ~~316~~ liner and conversely that associated impacts to groundwater are not present.

EVALUATION FINDINGS

Following assessment of the NAPIS and a review of collected data, several findings are evident:

1. As shown in Figure 3, initial (time zero) water levels in the LDU standpipes are above historical (2011-2020) local groundwater levels (minimum, maximum and average). Therefore, groundwater is not moving into the LDUs due to the higher head within the LDUs during typical operations.
2. The observed water levels within the East LDU indicates some minor recharge of water within the LDU (Figure 2) following evacuation of the bay on May 26, 2021. As was noted previously, a small hole was observed in the north wall of the East Bay. This hole (or potentially others that were not noted during the initial inspection) may have allowed water to migrate into the interstitial space

between the SS liner and the coated concrete containment wall during normal operations. Any water within the interstitial space will make its way into the LDU as designed. The leveling of the recharge curve indicates that the draining of the interstitial water is largely complete. In addition, the recharge level within the LDU has stabilized below local groundwater as shown by the historical ranges for the nearby wells. A leak within the LDU would result in a continued increase in the recharge level to equilibrium with the surrounding groundwater level. Therefore, the data suggests that there is no hydraulic communication the NAPIS East Bay and the surrounding groundwater.

3. Similarly, the water level in the West LDU indicated some drainage from the interstitial space following evacuation of fluids. However, the West Bay continues to operate at normal water levels. The recharge rate of the West LDU is somewhat higher than that of the East LDU (Table 1 and Figure 2). It is possible that the West Bay contains some minor imperfections that permit water flow into the West LDU. However, close inspection of the unit was not possible due to ongoing operations. With the West Bay operational and full of water and the East Bay out of operation and empty, this suggests that the higher water level and greater head in the West Bay is driving the higher West LDU water levels, and is also driving the relatively higher recharge rates shown in Table 2.
4. The West LDU recharge rate over the period June 2 to June 8, 2021 (148.7 hours) was 0.16 mL/min, or a total of 1.4 liters. The East LDU recharge rate over the same period was 0.03 mL/min, or a total of 0.27 liters. These rates and cumulative totals were based on the level changes in the LDU standpipes over that period. Therefore, there does appear to be leakage through the SS ~~304~~ liners on both NAPIS bays. As shown in Table 2, these leakage rates are extremely low.
5. If the West LDU water level returns to the level of water within the West Bay NAPIS, the evidence for the absence of a leak from the West LDU and NAPIS West bay into groundwater is stronger. Additional recharge time will be required to assess this trend.
6. Several analytes including manganese and chromium are elevated in the LDU standpipes~~wells~~ relative to the NAPIS monitoring wells. These analytes are components of stainless steel, of which the NAPIS liner was constructed. This also suggests that groundwater is not a source for the water detected in the LDUs. Alternatively, the absence of chromium in NAPIS monitoring wells suggests that the LDU's are not leaking to area groundwater.

CONCLUSIONS

1. The current data suggest that there is no leakage from the NAPIS or LDUs into groundwater. The chromium historical analytical data for the LDU and NAPIS monitoring wells underscores this conclusion.
2. There is evidence for a low rate of leakage through the SS ~~316~~ liner into the interstitial space of both the East and West Bay of the NAPIS. Observed corrosion in the East Bay SS ~~316~~ liner supports this

conclusion. The addition of a polyurethane coating on the concrete walls prior to installation of the SS ~~316~~ liner prevents leakage into groundwater.

3. A program of NAPIS SS ~~316~~ liner inspection and maintenance may be considered to reduce the potential for migration of water from the bays into the LDUs.

If you have any questions, please do not hesitate to contact us at (307) 745-7474.

Sincerely,
Trihydro Corporation

Heidi Jones
Client Manager

697-067-002

Attachments

cc: Ms. Kateri Luka

FIGURE

Page 513 of 514

Outline added for notations related to primary and secondary containment.

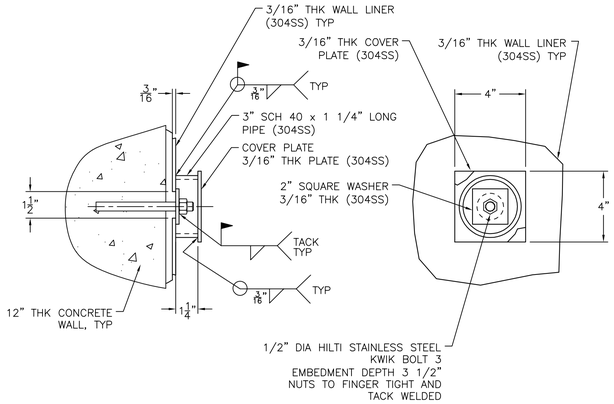

DETAIL Q
SEALED EXPANDABLE ANCHOR
SCALE: 3"=1'-0"
(REF DRAWING 42400-106)

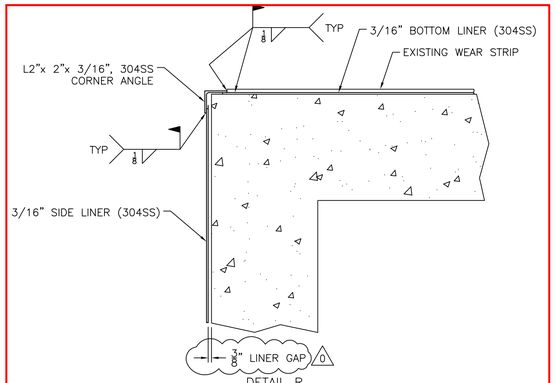

DETAIL R
API OUTSIDE CORNER
(REF DRAWING 42400-106)

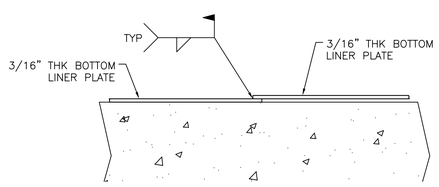

DETAIL S
API FLOOR LINER PLATE
SCALE: 3"=1'-0"
(REF DRAWING 42400-106)

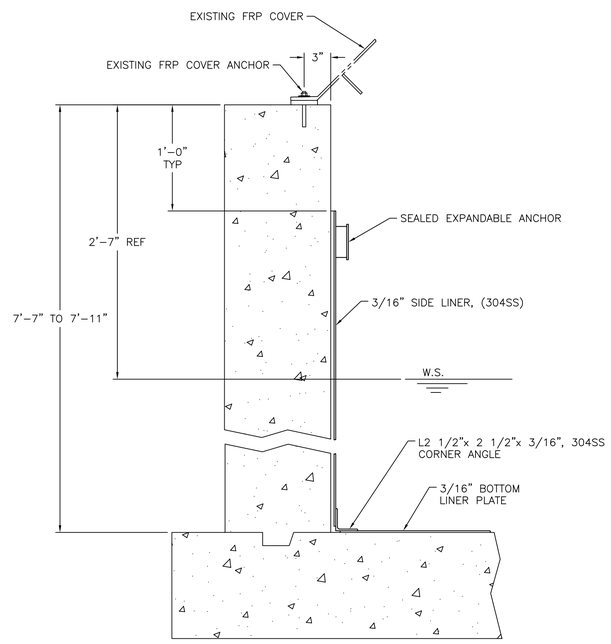

SECTION T-T
API INSIDE CORNER
(REF DRAWING 42400-105)

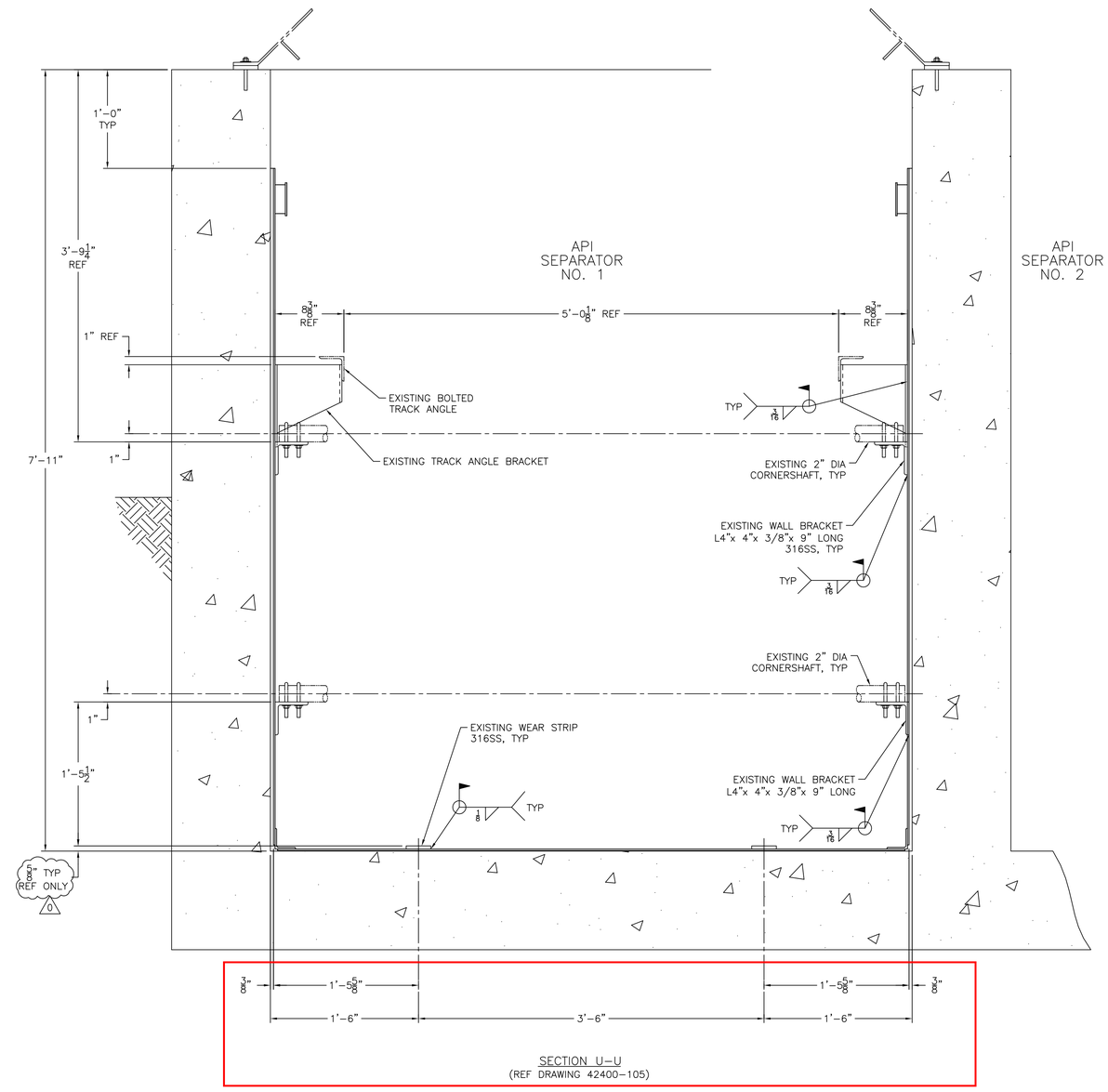

SECTION U-U
(REF DRAWING 42400-105)

REV	DESCRIPTION	DATE	DWN	CHKD	APVD	ECN
0	ISSUED FRO CONSTRUCTION REVISED PER 06/06/07 SITE MEETING	06/12/07	DJS	JLF	JLF	
A	ISSUED FOR APPROVAL AND INTERNAL REVIEW	05/22/07	DJS	JLF	JLF	

STD: 1-0200-24X36D1 | INTL REF: | BAR = 1" AT PLOT SCALE

COMPANY CONFIDENTIAL
THIS DOCUMENT AND ALL INFORMATION CONTAINED HEREIN ARE THE PROPERTY OF SIEMENS AND/OR ITS AFFILIATES. THE DESIGN CONCEPTS AND INFORMATION CONTAINED HEREIN ARE PROPRIETARY TO SIEMENS AND ARE SUBMITTED IN CONFIDENCE. THEY ARE NOT TRANSFERABLE AND MUST BE USED ONLY FOR THE PURPOSE FOR WHICH THE DOCUMENT IS EXPRESSLY LOANED. THEY MUST NOT BE DISCLOSED, REPRODUCED, LOANED OR USED IN ANY OTHER MANNER WITHOUT THE EXPRESS WRITTEN CONSENT OF SIEMENS. IN NO EVENT SHALL THEY BE USED IN ANY MANNER DETRIMENTAL TO THE INTEREST OF SIEMENS. ALL PATENT RIGHTS ARE RESERVED. UPON THE DEMAND OF SIEMENS, THIS DOCUMENT, ALONG WITH ALL COPIES AND EXTRACTS, AND ALL RELATED NOTES AND ANALYSES, MUST BE RETURNED TO SIEMENS OR DESTROYED, AS INSTRUCTED BY SIEMENS. ACCEPTANCE OF THE DELIVERY OF THIS DOCUMENT CONSTITUTES AGREEMENT TO THESE TERMS AND CONDITIONS.

	DATE
DESIGNER DJS	05/02/07
CHECKER JLF	05/11/07
ENGINEER	DATE
MANAGER JLF	05/11/07
FILE:	
SCALE: 1 1/2"=1'-0"	

TITLE GENERAL ARRANGEMENT
API SEPARATOR LINER DETAILS AND SECTIONS

CLIENT GIANT INDUSTRIES, INC
CINIZA REFINERY, GALLUP, NM

SIEMENS Water Technologies
WAUKESHA, WI
262-547-0141

PROJECT	CODE	DRAWING	SHEET	REV
S00062		42400-110	1 OF 1	A

Received by OCD: 12/16/2021 8:08:27 AM
Released to Imaging: 11/23/2022 9:27:32 AM

District I
1625 N. French Dr., Hobbs, NM 88240
Phone:(575) 393-6161 Fax:(575) 393-0720
District II
811 S. First St., Artesia, NM 88210
Phone:(575) 748-1283 Fax:(575) 748-9720
District III
1000 Rio Brazos Rd., Aztec, NM 87410
Phone:(505) 334-6178 Fax:(505) 334-6170
District IV
1220 S. St Francis Dr., Santa Fe, NM 87505
Phone:(505) 476-3470 Fax:(505) 476-3462

State of New Mexico
Energy, Minerals and Natural Resources
Oil Conservation Division
1220 S. St Francis Dr.
Santa Fe, NM 87505

CONDITIONS

Action 67347

CONDITIONS

Operator: Western Refining Southwest LLC 539 South Main Street Findlay, OH 45840	OGRID: 267595
	Action Number: 67347
	Action Type: [UF-DP] Discharge Permit (DISCHARGE PERMIT)

CONDITIONS

Created By	Condition	Condition Date
scwells	Accepted for Record Retention Purposes-Only	11/23/2022