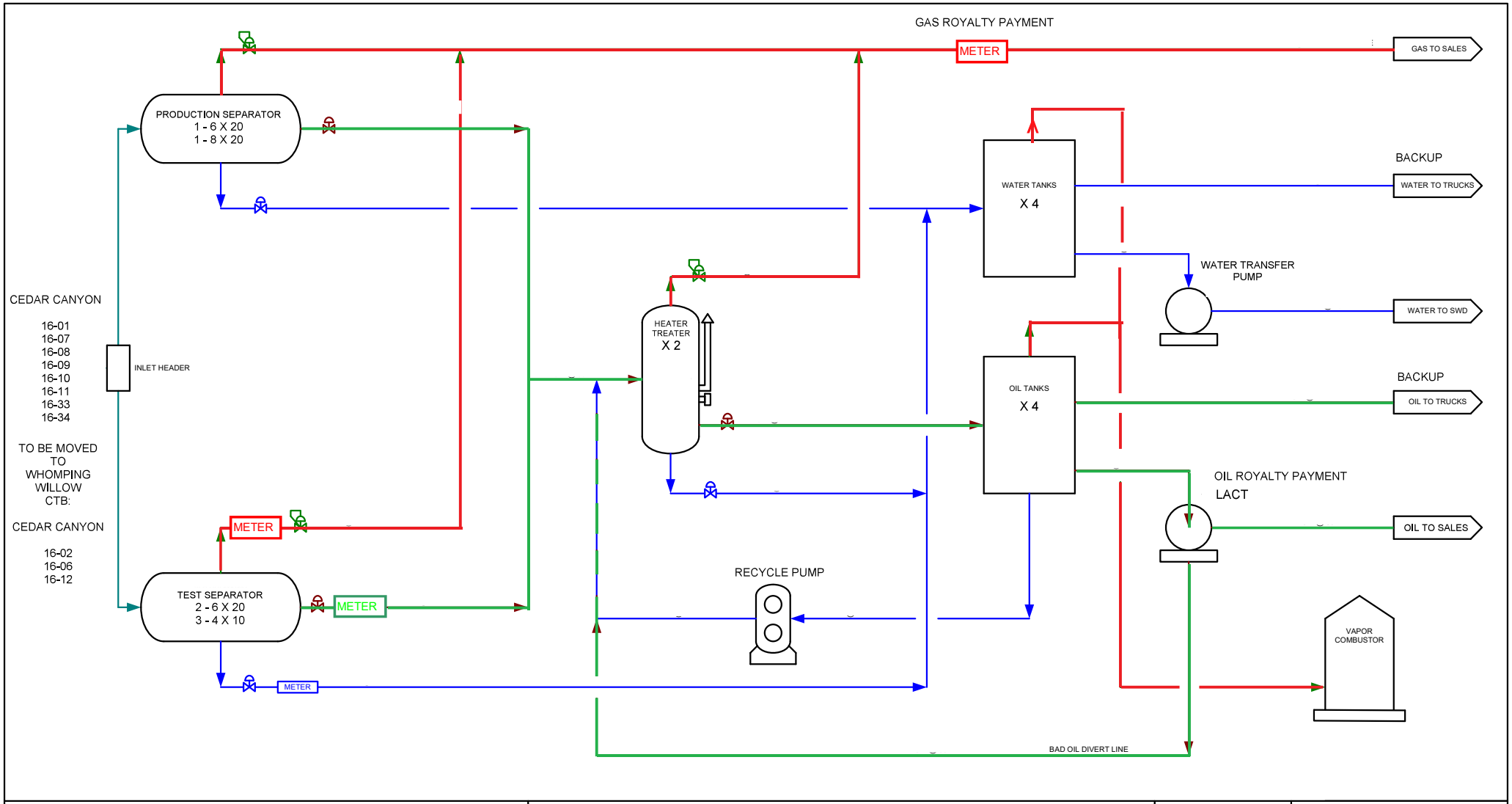

LEGEND
PRODUCTION MIX
OIL
GAS
WATER
EQUIPMENT

REVISION BLOCK						ENGINEERING RECORD	
NO.	DATE	DESCRIPTION	BY	CHK	APP	BY	DATE
0			KAO			DRN: SCM	04/03/20
						DES:	
						CHK:	
						APP:	
						AFE:	

OXY Permian

PROCESS FLOW DIAGRAM

CEDAR CANYON 16-1 CTB