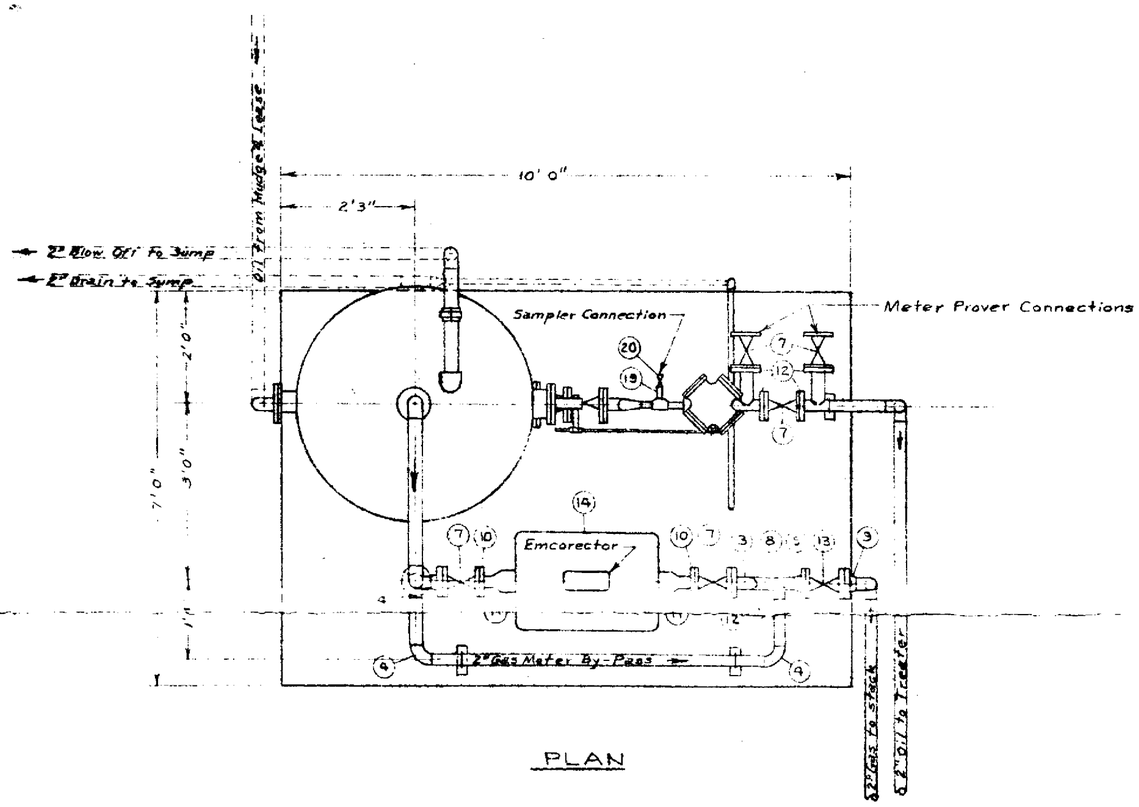

PLAN

PART NO.	REQ.	DESCRIPTION
23	1	2" Flanged Floco Valve
24	1	2"X1 Weld Reducer
25	1	1" Weld 90° Elbow
26	1	1" 90° Elbow (screwed)
27	1	1" Screwed Union

PART NO	REQ.	DESCRIPTION
1	1	Superior Separator Model 48 C-220
2	2	2"X 7½" Reducing Flange (slip on weld)
3	5	2" 90° Weld Elbow (long tangent one end)
4	10	2" 90° Weld Elbow (long radius)
5	1	2" Screwed Union (150 lb.)
6	1	3"X2" Flanged Taper Reducer
7	8	2" Flanged Plug Valve
8	3	2" 90° Weld Tee
9	5	2" Weld Neck Flange
10	3	2" Screw on Flange
11	2	4"X2" Screwed Reducer
12	8	2" Slip on Weld Flange
13	1	2" Kimray Flanged Back Pressure Valve
14	1	Rockwell #4 Gas Meter with Type I Emcorector
15	1	2"X1" Reducing 90° Weld Elbow
16	2	1" Nipple 2" lg. thread one end
17	2	1" Threaded Nipple 3" lg.
18	1	1"X1"X½" Reducing Tee (threaded)
19	1	1" Threaded Nipple 2" lg.
20	1	½" Gate Valve
21	1	A.O. Smith APM-2 Meter (pos. disp.)
22	1	1"X 4¼" Reducing Slip on weld flange

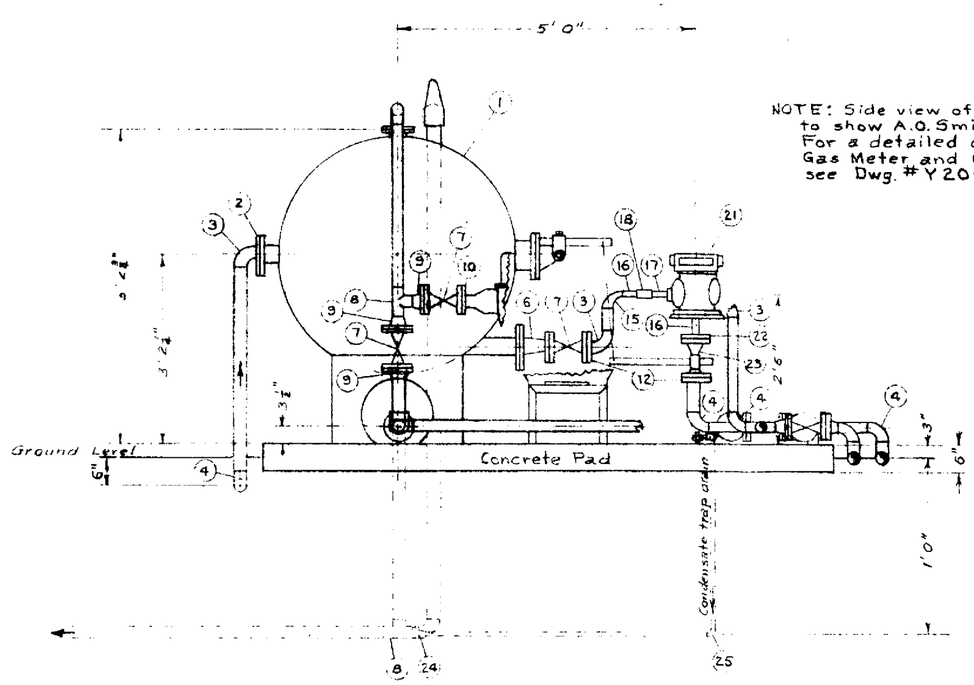

ELEVATION

NOTE: Side view of Gas Meter omitted to show A.O. Smith Oil Meter hookup. For a detailed drawing of the Rockwell Gas Meter and Condensate Trap setup see Dwg. #Y20-074.

BEFORE THE OIL CONSERVATION COMMISSION SANTA FE, NEW MEXICO
Shell EXHIBIT No. 5
CASE 1418

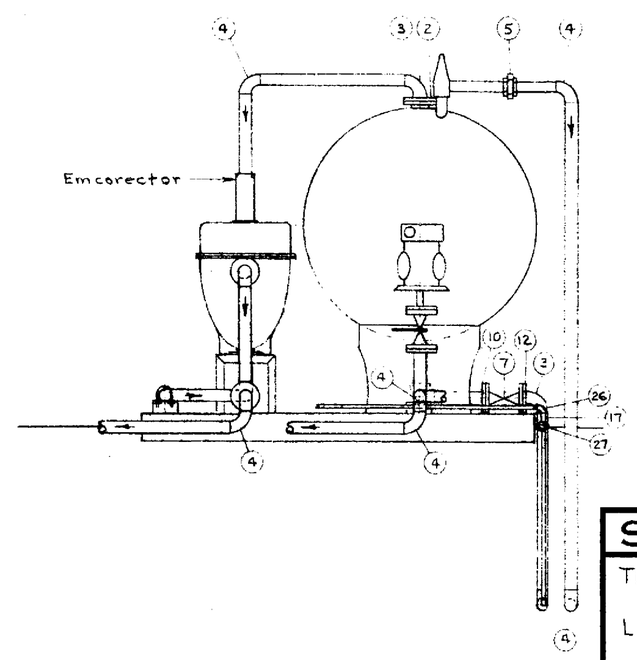

END VIEW

Revised April 4 '58

SHELL OIL COMPANY

TEST FACILITIES-MUDGE #4 LEASE
LOCATED AT
L.M. PHILLIPS #2 CENTRAL PLANT

DATE MAR. 27 '58	SCALE ½" = 1'
DRAWN BY L.G.S	APPROVED
TRACED BY	Y-20-075
CHECKED BY	