AP - 011

STAGE 1 & 2 REPORTS

DATE:

JAN. 25, 2000

ARCADIS
GERAGHTY & MILLER

Site Investigation Report

Former Bertha Barber Tank Battery
Lea County, New Mexico

PREPARED FOR

Marathon Oil Company

ARCADIS GERAGHTY&MILLER

Site Investigation Report

Former Bertha Barber Tank Battery
Lea County, New Mexico

John F. Horst
Staff Engineer

Michael A. Hansen, P.E.
Principal Engineer

Doreen Sousa
Associate

Prepared for:
Marathon Oil Company

Prepared by:
ARCADIS Geraghty & Miller, Inc.
3000 Cabot Boulevard West
Suite 3004
Langhorne
Pennsylvania 19047
Tel 215 752 6840
Fax 215 752 6879

Our Ref.:
NP000449.0002.00001

Date:
25 January 2000

Table of Contents

Tables

Figures

Appendices

1. Introduction

This Site Investigation Report (SIR) has been prepared on behalf of Marathon Oil Company (Marathon) to present the results of field activities and investigations conducted between January and December 1999 at the Former Bertha Barber Tank Battery (site) in Lea County, New Mexico. As shown on Figure 1, the site is situated in Section 5, Township 20 South, Range 37 East. This report has been prepared in accordance with the April 15, 1999 Stage 1 Abatement Plan prepared on behalf of Marathon by ARCADIS Geraghty and Miller (*Stage 1 Abatement Plan, Former Bertha Barber Tank Battery*), as conditionally approved by the New Mexico Oil Conservation Division (OCD) in correspondence to Marathon dated July 29, 1999. The purpose of this site investigation was to delineate the extent of petroleum hydrocarbons in the site subsurface, characterize the site hydrogeology and hydrology, and determine the proximity of potential receptors in the surrounding area.

Section 2 of this report summarizes the field activities and results associated with monitoring well gauging, soil delineation sampling, groundwater delineation sampling, and groundwater monitoring sampling. The remaining sections present the results of a one-mile radius water well search, a brief summary of the site investigation results, and the projected schedule for submission of the Stage 2 Abatement Plan.

2. Field Activities

2.1 Delineation Sampling

Delineation activities conducted as part of the Stage 1 Abatement Plan implementation were completed in August 1999. These activities involved the collection of both soil and groundwater samples. The following sections present the methods used to collect the samples, the laboratory analytical results, and the extent of delineation completed.

2.1.1 Soil

Previously, Marathon voluntarily initiated an investigation to determine the extent of petroleum hydrocarbon impacted soil at the site and included the results as part of the Stage 1 Abatement Plan. In order to complete the horizontal and vertical delineation, soil investigation activities were continued at the site between August 3 and 5, 1999. A total of ten new soil borings were installed at the site by Rhino Environmental Services (Rhino Environmental) of Albuquerque, New Mexico under the oversight of ARCADIS Geraghty & Miller (AG&M) personnel. The borings were installed using hollow-stem drilling techniques. Two of the borings (MW-6 and MW-10) were positioned in an area assumed to be hydraulically upgradient (northwest) of the site and representative of background conditions. This assumption was based on topographic relief and site features as well as past

groundwater elevation data collected at the site. Boring PZ-1 was positioned to the north of the site, just south of an off-site pumping well used for livestock watering (see Section 4.0). Boring PZ-4 was positioned off the southwestern edge of the site, while borings PZ-2, PZ-3, and MW-9 were positioned along the southern site boundary. Borings MW-7 and MW-11 were positioned to the southeast of the site, in an area assumed to be hydraulically downgradient. The remaining boring, MW-8 was positioned to the east of the site. The specific boring locations are depicted on Figure 3.

In order to complete the vertical delineation at each location, the soil borings were extended to a depth below the groundwater interface, approximately 32-34 feet below land surface (bls), to a maximum depth of 50 feet. During installation of each boring, soil samples were continuously collected using a four-foot split-spoon sampling device. Each four-foot sample was lithologically characterized by AG&M personnel and field-screened for the presence of volatile petroleum hydrocarbons using a photo-ionization detector (PID). Consistent with previous investigations completed at the site (as reported in the Stage 1 Abatement Plan), the lithology was found to consist primarily of interbedded sands and caliche. The soil boring logs and PID readings are presented in Appendix A.

In general, the discrete samples exhibiting the highest PID readings and/or the samples directly above the water table were selected for laboratory analysis. These soil samples were placed in laboratory-supplied containers and transported on ice within 24 hours to Core Laboratories of Valparaiso, Indiana. All samples were analyzed for total petroleum hydrocarbons diesel and gasoline range organics (TPH/DRO and TPH/GRO) and BTEX (benzene, toluene, ethylbenzene, and total xylenes) using United States Environmental Protection Agency (USEPA) Methods 8015B and 8021B, respectively. The results of the laboratory analyses are summarized in Table 1 and the complete laboratory data package is provided in Appendix B.

None of the identified TPH or BTEX concentrations exceeded OCD Remediation Guidelines. Of the ten samples submitted to the laboratory, the analytical results identified TPH/DRO and TPH/GRO concentrations above the laboratory detection limits of 10 milligrams per kilogram (mg/kg) and 1 mg/kg (respectively) in only one sample. This sample was collected from boring MW-7 at a depth of 32 to 34 feet and contained 21 mg/kg of TPH/DRO and 75 mg/kg of TPH/GRO. Concentrations of individual BTEX compounds were below their respective laboratory detection limits in all of the samples collected, with two exceptions. The sample collected from boring MW-7 also contained a total BTEX concentration of 1,020 micrograms per kilogram (ug/kg) and the sample collected from boring MW-8 at a depth of 32 to 34 feet contained a total BTEX concentration of 206 ug/kg. A summary of the soil delineation data is depicted on Figure 3.

2.1.2 Groundwater

Following installation, each soil boring was converted into a temporary monitoring well. Following installation, each new temporary well was surveyed on August 11, 1999 by John West Surveying

Company (location and elevation). The temporary wells were developed, gauged, and sampled on August 17, 1999 by Rhino Environmental.

Based on the gauging data, each of the temporary wells was purged of approximately three casing volumes of water, using either a submersible pump or a dedicated disposable bailer. Purge water from the sampling was contained at each well in a 55-gallon drum. Following each use, the pump and its appurtenances were decontaminated by washing with water and laboratory grade detergent followed by a distilled water rinse. Following purging, the monitoring wells were sampled using dedicated disposable bailers. The samples were obtained by slowly lowering the bailer into the well until it was submerged in the water column. The bailer was then retrieved and the groundwater was poured into the sample containers, which were immediately placed in sample coolers and preserved with ice. For QA/QC purposes, one field blank sample was analyzed along with one trip blank sample provided by the Laboratory. The samples were placed on ice and transported within 24 hours to Core Laboratories of Valparaiso, Indiana. Each groundwater sample was analyzed for the following parameters:

- General chemistry, using USEPA Methods 160.1 and 300. This included Total Dissolved Solids (TDS), Chloride, Fluoride, Nitrate, and Sulfate.
- Metals (dissolved), using USEPA Methods 6010B and 7470.
- BTEX, using USEPA Method 8260B.
- Polynuclear Aromatic Hydrocarbons (PAHs), using USEPA Method 8310.

The results of the laboratory analyses are summarized in Table 2 and the complete laboratory data package is provided in Appendix C. The laboratory analytical results identified the following:

- PAH's were not identified above the laboratory detection limits in any of the samples submitted for analysis.
- BTEX constituents were identified above the laboratory detection limits in only three of the samples submitted for analysis (wells MW-9, MW-10, PZ-3). Benzene was identified in MW-9 and PZ-3 at a concentration of 20 and 17 micrograms per liter (ug/L), respectively – only slightly above the New Mexico Water Quality Control Commission (WQCC) groundwater standard of 10 ug/L. Benzene, toluene, ethylbenzene, and total xylenes were identified in MW-10 at concentrations of 12,000, 160, 1,700, and 400 ug/L, respectively.
- Seven of the 21 dissolved metals analyzed for were below laboratory detection limits in all of the samples submitted (cadmium, chromium, copper, lead, molybdenum, silver, and mercury). Of the

remaining 14 dissolved metals analyzed, only four were identified at concentrations exceeding WQCC groundwater standards: barium, cobalt, iron, and manganese. The detection of barium, iron, and manganese is consistent with the findings of previous investigations at the site, as reported in the Stage 1 Abatement Plan. Cobalt was detected in only one sample (PZ-1), at a concentration just above its WQCC groundwater standard of 0.06 milligrams per liter (mg/L).

- Of the general chemistry parameters, fluoride, nitrate, and sulfate were not identified at concentrations above WQCC groundwater standards. Chloride and TDS were detected above WQCC groundwater standards in all of the wells sampled.

It should be noted that the temporary well with the highest dissolved BTEX concentrations (MW-10) was positioned upgradient of the site near a below-grade natural gas pipeline owned and operated by Warren Pipeline Company. Due to a release from the pipeline, the portion adjacent to MW-10 was recently excavated and repaired. Groundwater delineation data is summarized on Figure 4.

Following the delineation sampling, temporary wells PZ-3 and PZ-4 were abandoned by removing the temporary screens and grouting the boreholes with bentonite. The remaining temporary wells were converted into permanent wells by Rhino Environmental personnel on December 12, 1999. Each well was constructed of 2-inch diameter Schedule-40 polyvinyl chloride (PVC) casing with 15 feet of 0.01-inch slot PVC well screen. The annulus between the PVC and the borehole was packed with No. 1 Morie sand from the total depth of the borehole to just above the screen interval. The remainder of the borehole was sealed with two and a half feet of bentonite pellets and a grout seal. The finished wells were finished with a stickup casing. Table 3 includes a summary of the well construction details and the survey elevations. Monitoring well construction details are presented in Appendix D.

2.2 Groundwater Monitoring

In accordance with the approved Stage 1 Abatement Plan, quarterly groundwater sampling events were completed at the site on April 9, July 15, September 22, and December 15, 1999. Prior to sampling, each well was gauged with an oil-water interface probe. No groundwater sample was collected from those wells that were found to contain measurable thicknesses of separate-phase hydrocarbons. Sampling was completed in the same manner previously described in Section 2.1.2.

Laboratory analytical reports for each of these sampling events are presented in Appendix E. Figure 5 depicts the distribution of Benzene and Chloride in the site groundwater for all four monitoring events and Table 4 includes a summary of historical groundwater analytical results for the site. Details regarding the results of each sampling event are outlined in the following sections.

2.2.1 April 1999 Sampling Event

The initial quarterly groundwater monitoring event for 1999 was completed at the site on April 9 by Marathon personnel. The April 1999 event included sampling of Wells MW-1, MW-2, MW-3, MW-4, and MW-5, which were the original monitoring wells installed at the site during the original voluntary investigation completed by Marathon (Stage 1 Abatement Plan, Former Bertha Barber Tank Battery, 1999). The groundwater samples were submitted to Core Laboratories to be analyzed for general chemistry parameters (pH, TDS, and chloride) using USEPA Methods 150.1, 160.1 and 325.2; dissolved metals using USEPA Methods 6010B and 7470; BTEX using USEPA Method 8260B; and PAHs, using USEPA Method 8310. For QA/QC purposes, one field blank sample was analyzed along with one trip blank sample provided by the Laboratory. The results of the laboratory analyses identified the following:

- PAH's were not identified above the laboratory detection limits in any of the wells sampled, with one exception. Fluorene, fluoranthene, and naphthalene were identified in the sample collected from MW-4 at concentrations of 1.4, 1.2, and 18.1 ug/L.

- BTEX concentrations (total) ranged from below the laboratory detection limits in MW-2 to a maximum of 300 ug/L in MW-4. None of the individual BTEX constituents were identified at concentrations exceeding their respective WQCC standards with the exception of benzene. Benzene was identified above its 10 ug/L standard in Wells MW-3 (100ug/L), MW-4 (120 ug/L), and MW-5 (53 ug/L).

- Eight of the 25 dissolved metals analyzed were not identified at concentrations above laboratory detection limits in any of the wells sampled (antimony, beryllium, cadmium, cobalt, lead, molybdenum, selenium, and mercury). Of the remaining 17 dissolved metals analyzed, only five were identified at concentrations exceeding WQCC groundwater standards: aluminum, barium, chromium, iron, and manganese. This is consistent with the findings of previous investigations at the site, as reported in the Stage 1 Abatement Plan.

- Of the general chemistry parameters, pH ranged from 6.88 to 7 standard units. Chloride and TDS were detected above WQCC groundwater standards in each of the five wells sampled.

2.2.2 July 1999 Sampling Event

The second quarterly groundwater monitoring event for 1999 was completed at the site on July 15, 1999 by Rhino Environmental personnel. The July 1999 event included sampling of Wells MW-1, MW-2, MW-3, MW-4, and MW-5. The groundwater samples were submitted to Core Laboratories to be analyzed for BTEX using USEPA Method 8260B. For QA/QC purposes, one field blank sample was analyzed along with one trip blank sample provided by the Laboratory.

The results of the laboratory analyses identified total BTEX concentrations ranging from below the laboratory detection limits in MW-1, MW-2, and MW-3 to a maximum of 513 ug/L in MW-5. None of the individual BTEX constituents were identified at concentrations exceeding their respective WQCC standards with the exception of benzene. Benzene was identified above its 10 ug/L standard in Wells MW-4 (43 ug/L), and MW-5 (470 ug/L).

2.2.3 September 1999 Sampling Event

The third quarterly groundwater monitoring event for 1999 was completed at the site on September 22, 1999 by ARCADIS Geraghty & Miller personnel. The September 1999 event included sampling of Monitoring Wells MW-2, MW-3, MW-4, and MW-5; and Temporary Wells MW-6, MW-7, MW-8, MW-9, MW-10, MW-11, PZ-1, PZ-2, PZ-3, and PZ-4. MW-1 was not sampled due to the presence of separate-phase hydrocarbons. The groundwater samples were submitted to Core Laboratories to be analyzed for chloride using USEPA Method 325.2 and BTEX using USEPA Method 8260B. For QA/QC purposes, one field blank sample was analyzed along with one trip blank sample provided by the Laboratory and a replicate sample collected from PZ-1. The results of the laboratory analyses identified the following:

- Total BTEX concentrations were below the laboratory detection limits in nine of the fourteen wells sampled (MW-2, MW-3, MW-6, MW-7, MW-8, MW-11, PZ-1, PZ-2, and PZ-4). Concentrations in the remaining five wells ranged from a low of 8 ug/L in MW-9 to a high of 4,820 ug/L in MW-10. None of the individual BTEX constituents were identified at concentrations exceeding their respective WQCC standards with the exception of benzene and ethylbenzene. Benzene was identified above its 10 ug/L standard in Wells MW-4 (18 ug/L), MW-5 (160 ug/L), and MW-10 (2,900 ug/L). Ethylbenzene was identified above its 720 ug/L standard in only Well MW-10.

- Chloride concentrations were detected above WQCC groundwater standards in all of the wells sampled.

2.2.4 December 1999 Sampling Event

The fourth quarterly groundwater monitoring event for 1999 was completed at the site on December 15, 1999 by ARCADIS Geraghty & Miller personnel. The December 1999 sampling event included Monitoring Wells MW-2, MW-3, MW-4, MW-5, MW-6, MW-7, MW-8, MW-9, MW-11, MW-12, and MW-13. MW-1 and MW-10 were not sampled due to the presence of separate-phase hydrocarbons. The groundwater samples were submitted to Severn Trent Laboratories (formerly Core Laboratories) to be analyzed for general chemistry parameters (TDS and chloride) using USEPA Methods 160.1 and 325.2; dissolved metals (barium, manganese, and iron) using USEPA Method 6010B; and BTEX using USEPA Method 8260B. For QA/QC purposes, one field blank sample was

analyzed along with one trip blank sample provided by the Laboratory and a replicate sample of MW-5. The results of the laboratory analyses identified the following:

- Total BTEX concentrations were below the laboratory detection limits in nine of the eleven wells sampled (MW-2, MW-3, MW-6, MW-7, MW-8, MW-9, MW-11, MW-12, and MW-13). In the remaining two wells (MW-4 and MW-5), none of the individual BTEX constituents were identified at concentrations exceeding their respective WQCC standards with the exception of benzene (24 ug/L in MW-4 and 100ug/L in MW-5).

- Of the three dissolved metals analyzed, only barium was identified at a concentration exceeding its respective WQCC groundwater standard. Barium was identified at a concentration of 9.4 mg/L in MW-7 as compared to a standard of 1 mg/L. It should be noted that the metals analysis completed by the laboratory included magnesium rather than manganese. Laboratory analysis for dissolved manganese is next scheduled for September 2000 (see Section 5.).

- Chloride concentrations were detected above WQCC groundwater standards in all of the wells sampled.

3. Hydrogeology/Hydrology

As outlined in Section 2.2, site-wide monitoring well gauging events were performed on July 15, August 27, September 22, and December 15, 1999. Table 5 provides a summary of historical liquid-level gauging data and groundwater elevations for the site, including density corrections where separate-phase hydrocarbons were present. The only wells in which measurable amounts of separate-phase hydrocarbons were detected during any of the gauging events were MW-1 and MW-2. Both of these wells are located within the area of the former tank bottoms pits.

Figure 6 depicts the apparent groundwater elevation contours observed during the December 1999 gauging event. Apparent groundwater flow direction is to the southeast, consistent with the data from the March 1999 gauging event, as presented in the Stage 1 Abatement Plan. Horizontal hydraulic gradients across the site are flat, averaging approximately .0002 feet per foot.

With respect to local hydrology, there are no surface water bodies in the vicinity of the site and annual rainfall is minimal. Based on data obtained from a gauging station in Eddy County (Indian Basin), the region typically receives the highest amounts of precipitation between June and October. The average annual rainfall measured at the gauging station over the past four years is approximately 11 inches. During 1998, the rain gauge indicated that the highest amount of precipitation was received in October (2.0 inches), with a total of 3.95 inches for the year. This is consistent with data published by the National Oceanic and Atmospheric Administration (NOAA) for the area around Carlsbad, New Mexico.

4. Water Well Inventory

As required by OCD Rule 19, and in accordance with the approved Stage 1 Abatement Plan, a water well inventory was obtained by Marathon from the New Mexico State Engineer's Office. The inventory is presented in Appendix F, and summarized in Table 6. The inventory identified records for approximately 108 water wells within one mile of the site.

As indicated in Table 6, 20 of the 108 wells were registered for oil well drilling (temporary wells used in the well drilling process), 20 were registered as not completed, and one was registered for secondary recovery of oil. Only 47 of the 108 well records identified were registered for domestic use. Of the remaining well records, one was registered as a municipal supply, 11 were registered for livestock watering, and 7 were registered for irrigation.

Based on the location coordinates provided, only 11 wells are in an area hydraulically downgradient of the site. Of those 11 wells, only two are registered for domestic use – the remaining wells are registered as follows: six were not completed, one is registered for secondary oil recovery, and two are registered for livestock watering. The single municipal water well identified in the inventory is located side-gradient of the site, roughly one mile to the northeast. The remaining wells are positioned in areas either upgradient or sidegradient of the site. Based on the records provided by the State Engineer's Office, the water well just north of the site (identified on Figures 1 through 8) is owned by Marathon. This well is currently being used (by parties other than Marathon) for livestock watering. The approximate locations of the wells identified in the inventory are depicted on Figure 7.

5. Conclusions, Summary, and Project Schedule

Site investigation activities completed to date have delineated petroleum hydrocarbon impacts in both site soil and groundwater. Based on a review of the site investigation data, ARCADIS Geraghty & Miller has concluded the following:

- Groundwater flow is to the southeast. Given the very flat gradients, horizontal groundwater velocity is expected to be very low.

- Previous sampling identified residual petroleum hydrocarbon impacts at concentrations above OCD Remediation Guidelines in the source areas on-site (beneath the former tank bottoms pits and tank pad). The ten new borings completed at the site in August 1999 did not identify any residual petroleum hydrocarbon impacts to the site soil at concentrations above OCD Remediation Guidelines, completing the delineation for soil.

- Separate-phase hydrocarbons have been detected (intermittently) in three wells at the site, MW-1, MW-2, and MW-10. When detected, the amounts have been extremely limited (equal to or less than 0.02 feet).

- The primary constituent of concern in site groundwater is benzene, with minor exceedances detected for some metals, primarily barium, iron, and manganese. It is likely that these metal impacts are naturally occurring. Manganese and iron are commonly utilized by bacteria as electron acceptors and could be indicative of active biotic degradation occuring at the site.

- Dissolved hydrocabon impacts to groundwater are limited to localized areas adjacent to the former tank bottoms pits and tank pad and have not migrated off-site. The new monitoring wells installed at the site have completed the delineation of dissolved hydrocarbon impacts.

- Elevated chloride and TDS levels are consistent and ubiquitous in and around the site. This suggests the exceedances are an area-wide water quality issue and are not solely attributable to impacts at the site.

- It is likely that the impacts observed in the upgradient, off-site well MW-10 are related to the recent release associated with the adjacent Warren Pipeline. It is further likely that these impacts are contributing to the elevated TDS and chloride concentrations observed at the site.

A detailed remediation program will be evaluated and presented in a Stage 2 Abatement Plan, to be submitted within 60 days of receiving OCD approval of this Site Investigation Report. A summary of the anticipated project schedule for the upcoming year (2000) is presented in Table 7. During the coming year, groundwater monitoring at the former BBTB will be continued on a quarterly basis (March, June, September, and December). The monitoring program will involve each of the existing monitoring wells (MW-1 through MW-13). The quarterly groundwater monitoring events are included in Table 7.

During each monitoring event, a site-wide gauging event will be completed prior to sampling. No groundwater sample will be collected from wells that are found to contain measurable amounts of separate-phase hydrocarbons. At each well, the volume of the water column within the well will be calculated using the depth to water measurements obtained during the gauging event, the total well depth, and the well diameter. To ensure collection of representative groundwater samples, three volumes will be purged from each well using a submersible pump and dedicated tubing prior to sampling. If a well runs dry during purging, a sample will be collected after it has adequately recharged. Groundwater samples will be collected using disposable bailers, or directly from the submersible pump using the dedicated tubing.

Groundwater samples collected during each quarterly event (March, June, September, and December) will be analyzed for BTEX using USEPA Method 8020. On an annual basis (September), groundwater samples will be analyzed for PAHs using USEPA Method 8310, chloride, TDS, and selected metals (iron, manganese, and barium – dissolved). Quality assurance/quality control (QA/QC) procedures will follow the Quality Assurance Project Plan submitted as part of the approved Stage 1 Abatement Plan. Specifically, one rinsate sample (field blank), and one replicate sample will be submitted during each sampling event. One trip blank will also be submitted for each cooler utilized to transport samples to the laboratory.

Table 1. Soil Delineation Analytical Results, August 1999,
Marathon Oil Company, Former Bertha Barber Tank Battery, Lea County, New Mexico.

Location	Interval (feet bls)	TPH/DRO (mg/kg)	TPH/GRO (mg/kg)	Benzene (ug/kg)	Ethylbenzene (ug/kg)	Toluene (ug/kg)	m&p-Xylenes (ug/kg)	o-Xylene (ug/kg)	Total BTEX (ug/kg)
OCD Standards:		100	100	10,000	--	--	--	--	50,000
MW-6	28-30	<10	<1	<5	<5	<5	<10	<5	BDL
MW-7	32-34	21	75	<50	110	60	500	350	1020
MW-8	32-34	<10	<1	<5	16	85	66	39	206
MW-9	30-32	<10	<1	<5	<5	<5	<10	<5	BDL
MW-10	32-34	<10	<1	<5	<5	<5	<10	<5	BDL
MW-11	28-30	<10	<1	<5	<5	<5	<10	<5	BDL
PZ-1	30-32	<10	<1	<5	<5	<5	<10	<5	BDL
PZ-2	32-34	<10	<1	<5	<5	<5	<10	<5	BDL
PZ-3	32-34	<10	<1	<5	<5	<5	<10	<5	BDL
PZ-4	32-34	<10	<1	<5	<5	<5	<10	<5	BDL

Notes:

mg/kg	Milligrams per kilogram, equivalent to parts per million.
ug/kg	Micrograms per kilogram, equivalent to parts per billion.
<10	Indicates that the parameter was not identified above the noted laboratory detection limit.
BDL	Indicates that total was below limits of laboratory detection for all parameters.
feet bls	Feet below land surface.
OCD	New Mexico Energy, Minerals, and Natural Resources Department, Oil Conservation Division
TPH/DRO	Total petroleum hydrocarbons, diesel range organics
TPH/GRO	Total petroleum hydrocarbons, gasoline range organics

Table 2. Groundwater Delineation Analytical Results, August 1999,
Marathon Oil Company, Former Bertha Barber Tank Battery, Lea County, New Mexico.

Parameter	WQCC Standards	MW-6	MW-7	MW-8	MW-9	MW-10	MW-11	PZ-1	PZ-2	PZ-3	PZ-4
General Chemistry (mg/L):											
Total Dissolved Solids	1,000	**4,700**	**2,800**	**3,300**	**2,300**	**4,400**	**2,300**	**3,500**	**7,100**	**4,100**	**5,900**
Chloride	250	**2,460**	**1,400**	**1,860**	**1,100**	**2,370**	**1,020**	**1,920**	**4,160**	**2,130**	**3,220**
Fluoride	1.6	<5.0	<5.0	<5.0	<5.0	<5.0	<5.0	<5.0	<5.0	<5.0	<5.0
Nitrate as N	10	<1.0	<1.0	<1.0	<1.0	<1.0	<1.0	<1.0	<1.0	<1.0	<1.0
Sulfate	600	188	84	44	97	184	354	170	303	124	233
Metals (mg/L):											
Aluminum	5	0.12	<0.05	<0.05	<0.05	<0.05	<0.05	<0.05	<0.05	<0.05	<0.05
Arsenic	0.1	<0.02	<0.02	<0.02	<0.02	0.02	<0.02	<0.02	<0.02	<0.02	<0.02
Barium	1	0.14	0.44	**6.16**	0.21	0.14	0.14	0.16	0.16	0.2	0.17
Boron	0.75	0.39	0.42	0.47	0.4	0.44	0.39	0.38	0.49	0.47	0.41
Cadmium	0.01	<0.005	<0.005	<0.005	<0.005	<0.005	<0.005	<0.005	<0.005	<0.005	<0.005
Calcium	--	573	379	407	319	575	300	339	974	524	852
Chromium	0.05	<0.01	<0.01	<0.01	<0.01	<0.01	<0.01	<0.01	<0.01	<0.01	<0.01
Cobalt	0.05	<0.02	<0.02	<0.02	<0.02	<0.02	<0.02	**0.06**	<0.02	<0.02	<0.02
Copper	1	<0.01	<0.01	<0.01	<0.01	<0.01	<0.01	<0.01	<0.01	<0.01	<0.01
Iron	1	<0.05	<0.05	0.8	0.11	0.61	<0.05	<0.05	0.11	**1.12**	<0.05
Lead	0.05	<0.05	<0.05	<0.05	<0.05	<0.05	<0.05	<0.05	<0.05	<0.05	<0.05
Magnesium	--	115	102	151	104	149	84.6	143	250	148	203
Manganese	0.2	**0.21**	0.06	**0.34**	**0.22**	0.17	0.17	0.09	0.13	0.18	0.06
Molybdenum	1	<0.05	<0.05	<0.05	<0.05	<0.05	<0.05	<0.05	<0.05	<0.05	<0.05
Nickel	0.2	<0.01	<0.01	<0.01	<0.01	0.04	<0.01	0.06	<0.01	<0.01	<0.01
Potassium	--	11.7	9.7	13.1	8.4	11.1	9.5	24.3	18.6	12.8	16.1
Selenium	0.05	<0.02	0.03	<0.02	<0.02	<0.02	<0.02	<0.02	<0.02	<0.02	<0.02
Silver	0.05	<0.01	<0.01	<0.01	<0.01	<0.01	<0.01	<0.01	<0.01	<0.01	<0.01
Sodium	--	640	560	730	490	880	460	860	1540	730	1070
Zinc	10	0.02	<0.01	<0.01	<0.01	<0.01	<0.01	<0.01	<0.01	<0.01	<0.01
Mercury	0.002	<0.0002	<0.0002	<0.0002	<0.0002	<0.0002	<0.0002	<0.0002	<0.0002	<0.0002	<0.0002
Volatile Organic Compounds (ug/L):											
Benzene	10	<5	<5	<5	**20**	**12000**	<5	<5	<5	**17**	<5
Ethylbenzene	750	<5	<5	<5	<5	160	<5	<5	<5	<5	<5
Toluene	750	<5	<5	<5	<5	**1700**	<5	<5	<5	<5	<5
Xylenes (total)	620	<10	<10	<10	<10	400	<10	<10	<10	<10	<10
Polynuclear Aromatic Hydrocarbons (ug/L):											
Acenaphthene	--	<5	<5	<5	<5	<5	<5	<5	<5	<5	<5
Acenaphthylene	--	<5	<5	<5	<5	<5	<5	<5	<5	<5	<5
Anthracene	--	<1	<1	<1	<1	<1	<1	<1	<1	<1	<1
Benzo(a)anthracene	--	<0.1	<0.1	<0.1	<0.1	<0.1	<0.1	<0.1	<0.1	<0.1	<0.1
Benzo(a)pyrene	0.7	<0.1	<0.1	<0.1	<0.1	<0.1	<0.1	<0.1	<0.1	<0.1	<0.1
Benzo(b)fluoranthene	--	<0.1	<0.1	<0.1	<0.1	<0.1	<0.1	<0.1	<0.1	<0.1	<0.1
Benzo(ghi)perylene	--	<0.1	<0.1	<0.1	<0.1	<0.1	<0.1	<0.1	<0.1	<0.1	<0.1
Benzo(k)fluoranthene	--	<0.1	<0.1	<0.1	<0.1	<0.1	<0.1	<0.1	<0.1	<0.1	<0.1
Chrysene	--	<1	<1	<1	<1	<1	<1	<1	<1	<1	<1
Dibenzo(a,h)anthracene	--	<0.1	<0.1	<0.1	<0.1	<0.1	<0.1	<0.1	<0.1	<0.1	<0.1
Fluoranthene	--	<1	<1	<1	<1	<1	<1	<1	<1	<1	<1
Fluorene	--	<1	<1	<1	<1	<1	<1	<1	<1	<1	<1
Indeno(1,2,3-cd)pyrene	--	<0.1	<0.1	<0.1	<0.1	<0.1	<0.1	<0.1	<0.1	<0.1	<0.1
Naphthalene	--	<5	<5	<5	<5	<5	<5	<5	<5	<5	<5
Phenanthrene	--	<1	<1	<1	<1	<1	<1	<1	<1	<1	<1
Pyrene	--	<1	<1	<1	<1	<1	<1	<1	<1	<1	<1
Total naphthalene/ monomethylnaphthalenes	30	0	0	0	0	0	0	0	0	0	0

Notes:

mg/L	Milligrams per liter, equivalent to parts per million.
ug/L	Micrograms per liter, equivalent to parts per billion.
<10	Indicates that the parameter was not identified above the noted laboratory detection limit.
1.12	Boldface type indicates that the parameter was identified at a concentration exceeding its respective water quality standard.
--	Indicates that no standard has been published.
WQCC	New Mexico Water Quality Control Commission.

Table 3. Monitoring Well Construction Details,
Marathon Oil Company, Former Bertha Barber Tank Battery, Lea County, New Mexico.

Well ID	Measuring Point Elevation (feet amsl)	Total Depth (feet btoc)	Top of Screen Interval (feet btoc)	Screen Length (feet)	Casing Diameter (inches)
MW-1	3561.18	48	8.17	40	4
MW-2	3561.69	47	7.21	40	4
MW-3	3562.98	47	7.02	40	4
MW-4	3563.01	52	6.77	45	4
MW-5	3561.08	50	9.88	40	4
MW-6	3561.26	47	32.17	15	2
MW-7	3562.45	47	32.21	15	2
MW-8	3561.40	47	31.80	15	2
MW-9	3563.56	46	30.85	15	2
MW-10	3560.51	40	25.45	15	2
MW-11	3565.46	50	34.70	15	2
MW-12 (PZ-2)	3559.68	45	29.70	15	2
MW-13 (PZ-1)	3562.11	44	28.60	15	2

Notes:

feet amsl	Feet above mean sea level.
feet btoc	Feet below top of casing.
feet bls	Feet below land surface

Table 4. Historical Groundwater Analytical Results,
Marathon Oil Company, Former Bertha Barber Tank Battery, Lea County, New Mexico.

Parameter	WQCC Standards	MW-1 12/30/98	MW-1 4/9/99	MW-1 7/15/99	MW-1 9/22/99 (NS)	MW-1 12/15/99 (NS)	MW-2 12/30/98	MW-2 4/9/99	MW-2 7/15/99	MW-2 9/22/99	MW-2 12/15/99
General Chemistry											
Total Dissolved Solids (mg/l)	1,000	**7,000**	**6,100**	--	--	--	**5,200**	**4,400**	--	--	**5,600**
pH (s.u.)	6 to 9	6.88	6.88	--	--	--	7.15	7	--	--	--
Alkalinity, Bicarbonate (mg/l)	--	380	--	--	--	--	400	--	--	--	--
Alkalinity, Carbonate (mg/l)	--	< 5	--	--	--	--	< 5	--	--	--	--
Bromide (mg/l)	--	1.2	--	--	--	--	1.9	--	--	--	--
Chloride (mg/l)	250	**2,900**	**3,600**	--	--	--	**2,500**	**2,700**	--	**2,500**	**3,000**
Specific Conductivity (umhos/cm)	--	5400	--	--	--	--	4700	--	--	--	--
Fluoride (mg/l)	1.6	1.3	--	--	--	--	**1.8**	--	--	--	--
Nitrate (mg/l)	10	< 0.05	--	--	--	--	< 0.05	--	--	--	--
Silica, Free as SiO_2 (mg/l)	--	27	--	--	--	--	24	--	--	--	--
Sulfate (mg/l)	600	53	--	--	--	--	73	--	--	--	--
Metals (mg/L):											
Aluminum	5	1.10	4.2	--	--	--	0.48	1.41	--	--	--
Antimony	--	< 0.005	<0.1	--	--	--	< 0.005	<0.1	--	--	--
Arsenic	0.1	< 0.005	<0.02	--	--	--	0.01	0.03	--	--	--
Barium	1	**2.90**	**2.74**	--	--	--	0.25	0.39	--	--	0.16
Beryllium	--	--	<0.005	--	--	--	< 0.002	<0.005	--	--	--
Boron	0.75	0.55	0.53	--	--	--	0.61	0.74	--	--	--
Cadmium	0.01	< 0.002	<0.005	--	--	--	< 0.002	<0.005	--	--	--
Calcium	--	660	828	--	--	--	410	441	--	--	--
Chromium	0.05	< 0.005	0.01	--	--	--	< 0.005	<0.01	--	--	--
Cobalt	0.05	< 0.005	<0.03	--	--	--	< 0.005	<0.03	--	--	--
Copper	1	< 0.005	<0.01	--	--	--	< 0.005	<0.01	--	--	--
Iron	1	**1**	**3.86**	--	--	--	0.49	**1.54**	--	--	<0.05
Lead	0.05	< 0.005	<0.05	--	--	--	< 0.005	<0.05	--	--	--
Magnesium	--	210	216	--	--	--	150	158	--	--	126
Manganese	0.2	**0.27**	**0.48**	--	--	--	**0.25**	**0.26**	--	--	--
Molybdenum	1	< 0.005	<0.05	--	--	--	< 0.005	<0.05	--	--	--
Nickel	0.2	< 0.0050	0.02	--	--	--	0.0054	0.01	--	--	--
Potassium	--	37	29.9	--	--	--	51	48.7	--	--	--
Selenium	0.05	< 0.0050	<0.02	--	--	--	< 0.0050	<0.02	--	--	--
Silver	0.05	< 0.005	<0.01	--	--	--	< 0.005	<0.01	--	--	--
Sodium	--	900	772	--	--	--	810	738	--	--	--
Thallium		< 0.010	<0.02	--	--	--	< 0.010	<0.02	--	--	--
Vanadium		< 0.0050	0.06	--	--	--	< 0.0050	<0.05	--	--	--
Zinc	10	0.013	0.02	--	--	--	0.014	0.09	--	--	--
Mercury	0.002	--	<0.001	--	--	--	--	<0.001	--	--	--
Volatile Organic Compounds (ug/L):											
Benzene	10	2.8	5	<500	--	--	1.1	<5	<5	<5	<5
Ethylbenzene	750	1.1	<5	<500	--	--	0.6	<5	<5	<5	<5
Toluene	750	0.7	<5	<500	--	--	1.7	<5	<5	<5	<5
Xylenes (total)	620	2.1	<10	<1000	--	--	2.0	<10	<10	<10	<10
Polynuclear Aromatic Hydrocarbons (ug/L):											
Acenaphthene	--	< 1.0	<5	--	--	--	< 1.0	<5	--	--	--
Acenaphthylene	--	< 1.0	<5	--	--	--	< 1.0	<5	--	--	--
Anthracene	--	< 1.0	<1	--	--	--	< 1.0	<1	--	--	--
Benzo(a)anthracene	--	< 5.0	6.5	--	--	--	< 1.0	<0.1	--	--	--
Benzo(a)pyrene	0.7	< 1.0	<0.1	--	--	--	< 1.0	<0.1	--	--	--
Benzo(b)fluoranthene	--	< 1.0	1.6	--	--	--	< 1.0	<0.1	--	--	--
Benzo(ghi)perylene	--	< 1.0	<0.1	--	--	--	< 1.0	<0.1	--	--	--
Benzo(k)fluoranthene	--	< 1.0	<0.1	--	--	--	< 1.0	<0.1	--	--	--
Chrysene	--	1.0	<1	--	--	--	< 1.0	<1	--	--	--
Dibenzo(a,h)anthracene	--	< 1.0	<0.1	--	--	--	< 1.0	<0.1	--	--	--
Fluoranthene	--	3.0	41	--	--	--	< 1.0	<1	--	--	--
Fluorene	--	3.0	<1	--	--	--	< 1.0	<1	--	--	--
Indeno(1,2,3-cd)pyrene	--	< 1.0	<0.1	--	--	--	< 1.0	<0.1	--	--	--
Naphthalene	--	5.0	<5	--	--	--	< 1.0	<5	--	--	--
Phenanthrene	--	2.0	<1	--	--	--	< 1.0	<1	--	--	--
Pyrene	--	3.0	<1	--	--	--	< 1.0	<1	--	--	--
1-Methylnaphthalene	--	32.0	--	--	--	--	2.0	--	--	--	--
2-Methylnaphthalene	--	10.0	--	--	--	--	2.0	--	--	--	--
Total naphthalene/ monomethylnaphthalenes	30	**47.0**	--	--	--	--	4.0	--	--	--	--

Notes:

mg/L	Milligrams per liter, equivalent to parts per million.
ug/L	Micrograms per liter, equivalent to parts per billion.
umhos/cm	Micromhos per centimeter.
<10	Indicates that the parameter was not identified above the noted laboratory detection limit.
1.12	Boldface type indicates that the parameter was identified at a concentration exceeding its respective water quality standard.
--	Indicates that no standard has been published/parameter was not analyzed.
WQCC	New Mexico Water Quality Control Commission.
NS	Well not sampled due to presence of separate-phase hydrocarbons.

Table 4. Historical Groundwater Analytical Results,
Marathon Oil Company, Former Bertha Barber Tank Battery, Lea County, New Mexico.

Parameter	WQCC Standards	MW-3 12/30/98	MW-3 4/9/99	MW-3 7/15/99	MW-3 9/22/99	MW-3 12/15/99	MW-4 12/30/98	MW-4 4/9/99	MW-4 7/15/99	MW-4 9/22/99	MW-4 12/15/99
General Chemistry											
Total Dissolved Solids (mg/l)	1,000	**3,590**	**3,500**	--	--	**2,800**	**1,900**	**1,900**	--	--	**1,600**
pH (s.u.)	6 to 9	6.95	6.78	--	--	--	7.04	6.95	--	--	--
Alkalinity, Bicarbonate (mg/l)	--	280	--	--	--	--	390	--	--	--	--
Alkalinity, Carbonate (mg/l)	--	< 5	--	--	--	--	< 5	--	--	--	--
Bromide (mg/l)	--	7.8	--	--	--	--	< 5	--	--	--	--
Chloride (mg/l)	250	**1,900**	**2,000**	--	**1,300**	**1,200**	**700**	**800**	--	**510**	**580**
Specific Conductivity (umhos/cm)	--	3900	--	--	--	--	1800	--	--	--	--
Fluoride (mg/l)	1.6	1.3	--	--	--	--	1.5	--	--	--	--
Nitrate (mg/l)	10	< 0.05	--	--	--	--	0.07	--	--	--	--
Silica, Free as SiO_2 (mg/l)	--	24	--	--	--	--	23	--	--	--	--
Sulfate (mg/l)	600	170	--	--	--	--	120	--	--	--	--
Metals (mg/L):											
Aluminum	5	0.48	4.98	--	--	--	1.60	2.57	--	--	--
Antimony	--	< 0.005	<0.1	--	--	--	< 0.005	<0.1	--	--	--
Arsenic	0.1	0.024	<0.02	--	--	--	< 0.005	<0.02	--	--	--
Barium	1	0.23	0.69	--	--	0.09	0.21	**1.63**	--	--	0.87
Beryllium	--	< 0.002	<0.005	--	--	--	< 0.002	<0.005	--	--	--
Boron	0.75	0.43	0.44	--	--	--	0.33	0.44	--	--	--
Cadmium	0.01	< 0.002	<0.005	--	--	--	< 0.002	<0.005	--	--	--
Calcium	--	470	677	--	--	--	270	340	--	--	--
Chromium	0.05	< 0.005	0.01	--	--	--	< 0.005	0.01	--	--	--
Cobalt	0.05	< 0.005	<0.03	--	--	--	< 0.005	<0.03	--	--	--
Copper	1	< 0.005	<0.01	--	--	--	< 0.005	<0.01	--	--	--
Iron	1	0.79	**4.66**	--	--	<0.05	**1.20**	**1.46**	--	--	<0.05
Lead	0.05	< 0.005	<0.05	--	--	--	< 0.005	<0.05	--	--	--
Magnesium	--	150	148	--	--	77.7	62	77.2	--	--	48.4
Manganese	0.2	**0.25**	**0.37**	--	--	--	0.12	**0.32**	--	--	--
Molybdenum	1	< 0.005	<0.05	--	--	--	< 0.005	<0.05	--	--	--
Nickel	0.2	< 0.0050	<0.01	--	--	--	< 0.0050	<0.01	--	--	--
Potassium	--	18	12.5	--	--	--	14	9.6	--	--	--
Selenium	0.05	< 0.0050	<0.02	--	--	--	< 0.0050	<0.02	--	--	--
Silver	0.05	< 0.005	0.03	--	--	--	< 0.005	<0.01	--	--	--
Sodium	--	530	395	--	--	--	230	272	--	--	--
Thallium		< 0.010	0.02	--	--	--	< 0.010	0.03	--	--	--
Vanadium		< 0.0050	<0.05	--	--	--	0.0084	<0.05	--	--	--
Zinc	10	< 0.005	0.02	--	--	--	0.019	0.02	--	--	--
Mercury	0.002	--	<0.001	--	--	--	--	<0.001	--	--	--
Volatile Organic Compounds (ug/L):											
Benzene	10	**32**	**100**	<5	<5	<5	**16**	**120**	**43**	**18**	**24**
Ethylbenzene	750	2.1	14	<5	<5	<5	15	77	<5	<5	22
Toluene	750	26	<5	<5	<5	<5	2.7	43	28	12	11
Xylenes (total)	620	21	<10	<10	<10	<10	28	60	<10	<10	39.7
Polynuclear Aromatic Hydrocarbons (ug/L):											
Acenaphthene	--	< 2.50	<5	--	--	--	< 1.0	<5	--	--	--
Acenaphthylene	--	< 2.50	<5	--	--	--	< 1.0	<5	--	--	--
Anthracene	--	< 0.60	<1	--	--	--	< 1.0	<1	--	--	--
Benzo(a)anthracene	--	< 0.02	<0.1	--	--	--	< 5.0	0.12	--	--	--
Benzo(a)pyrene	0.7	< 0.02	<0.1	--	--	--	< 1.0	<0.1	--	--	--
Benzo(b)fluoranthene	--	< 0.02	<0.1	--	--	--	< 1.0	<0.1	--	--	--
Benzo(ghi)perylene	--	< 0.03	<0.1	--	--	--	< 1.0	<0.1	--	--	--
Benzo(k)fluoranthene	--	< 0.03	<0.1	--	--	--	< 1.0	<0.1	--	--	--
Chrysene	--	< 0.02	<1	--	--	--	< 1.0	<1	--	--	--
Dibenzo(a,h)anthracene	--	< 0.04	<0.1	--	--	--	< 1.0	<0.1	--	--	--
Fluoranthene	--	< 0.30	<1	--	--	--	3.0	1.4	--	--	--
Fluorene	--	< 0.02	<1	--	--	--	1.0	1.2	--	--	--
Indeno(1,2,3-cd)pyrene	--	< 0.08	<0.1	--	--	--	< 1.0	<0.1	--	--	--
Naphthalene	--	< 2.50	<5	--	--	--	5.0	18.1	--	--	--
Phenanthrene	--	< 0.60	<1	--	--	--	2.0	1	--	--	--
Pyrene	--	< 0.30	<1	--	--	--	3.0	<1	--	--	--
1-Methylnaphthalene	--	5.30	--	--	--	--	17.0	--	--	--	--
2-Methylnaphthalene	--	4.10	--	--	--	--	12.0	--	--	--	--
Total naphthalene/ monomethylnaphthalenes	30	9.4	--	--	--	--	**34.0**	18.1	--	--	--

Notes:

mg/L	Milligrams per liter, equivalent to parts per million.
ug/L	Micrograms per liter, equivalent to parts per billion.
umhos/cm	Micromhos per centimeter.
<10	Indicates that the parameter was not identified above the noted laboratory detection limit.
1.12	Boldface type indicates that the parameter was identified at a concentration exceeding its respective water quality standard.
--	Indicates that no standard has been published/parameter was not analyzed.
WQCC	New Mexico Water Quality Control Commission.
NS	Well not sampled due to presence of separate-phase hydrocarbons.

Table 4. Historical Groundwater Analytical Results,
Marathon Oil Company, Former Bertha Barber Tank Battery, Lea County, New Mexico.

Parameter	WQCC Standards	MW-5 12/30/98	MW-5 4/9/99	MW-5 7/15/99	MW-5 9/22/99	MW-5 12/15/99	MW-6 8/17/99	MW-6 9/22/99	MW-6 12/15/99	MW-7 8/17/99	MW-7 9/22/99	MW-7 12/15/99
General Chemistry												
Total Dissolved Solids (mg/l)	1,000	**4,200**	**4,000**	--	--	**2,500**	**4,700**	--	**5,200**	**2,800**	--	**4,000**
pH (s.u.)	6 to 9	6.98	6.79	--	--	--	--	--	--	--	--	--
Alkalinity, Bicarbonate (mg/l)	--	510	--	--	--	--	--	--	--	--	--	--
Alkalinity, Carbonate (mg/l)	--	< 5	--	--	--	--	--	--	--	--	--	--
Bromide (mg/l)	--	6.9	--	--	--	--	--	--	--	--	--	--
Chloride (mg/l)	250	**1,900**	**2,400**	--	**860**	**1,200**	**2,460**	**2,400**	**2,900**	**1,400**	**1,100**	**2,300**
Specific Conductivity (umhos/cm)	--	3700	--	--	--	--	--	--	--	--	--	--
Fluoride (mg/l)	1.6	1.3	--	--	--	--	<5.0	--	--	<5.0	--	--
Nitrate (mg/l)	10	< 0.05	--	--	--	--	<1.0	--	--	<1.0	--	--
Silica, Free as SiO_2 (mg/l)	--	25	--	--	--	--	--	--	--	--	--	--
Sulfate (mg/l)	600	63	--	--	--	--	188	--	--	84	--	--
Metals (mg/L):												
Aluminum	5	1.90	**61.3**	--	--	--	0.12	--	--	<0.05	--	--
Antimony	--	< 0.005	<0.1	--	--	--	--	--	--	--	--	--
Arsenic	0.1	< 0.005	0.05	--	--	--	<0.02	--	--	<0.02	--	--
Barium	1	**7.70**	**15.3**	--	--	**1.41**	0.14	--	0.15	0.44	--	**9.4**
Beryllium	--	< 0.002	<0.005	--	--	--	--	--	--	--	--	--
Boron	0.75	0.49	0.55	--	--	--	0.39	--	--	0.42	--	--
Cadmium	0.01	< 0.002	<0.005	--	--	--	<0.005	--	--	<0.005	--	--
Calcium	--	470	<0.5	--	--	--	573	--	--	379	--	--
Chromium	0.05	< 0.005	**0.09**	--	--	--	<0.01	--	--	<0.01	--	--
Cobalt	0.05	< 0.005	<0.03	--	--	--	<0.02	--	--	<0.02	--	--
Copper	1	< 0.005	0.06	--	--	--	<0.01	--	--	<0.01	--	--
Iron	1	**1.20**	**47.2**	--	--	<0.05	<0.05	--	<0.05	<0.05	--	0.25
Lead	0.05	< 0.005	<0.05	--	--	--	<0.05	--	--	<0.05	--	--
Magnesium	--	160	234	--	--	97.1	115	--	162	102	--	157
Manganese	0.2	0.19	**0.97**	--	--	--	**0.21**	--	--	0.06	--	--
Molybdenum	1	< 0.005	<0.05	--	--	--	<0.05	--	--	<0.05	--	--
Nickel	0.2	< 0.0050	0.05	--	--	--	<0.01	--	--	<0.01	--	--
Potassium	--	14	23.7	--	--	--	11.7	--	--	9.7	--	--
Selenium	0.05	0.0069	<0.02	--	--	--	<0.02	--	--	0.03	--	--
Silver	0.05	< 0.005	0.1	--	--	--	<0.01	--	--	<0.01	--	--
Sodium	--	510	455	--	--	--	640	--	--	560	--	--
Thallium		< 0.010	0.03	--	--	--	--	--	--	--	--	--
Vanadium		0.0086	0.31	--	--	--	--	--	--	--	--	--
Zinc	10	0.015	0.12	--	--	--	0.02	--	--	<0.01	--	--
Mercury	0.002	--	<0.001	--	--	--	<0.0002	--	--	<0.0002	--	--
Volatile Organic Compounds (ug/L):												
Benzene	10	**180**	**53**	**470**	**160**	**100**	<5	<5	<5	<5	<5	<5
Ethylbenzene	750	41	<5	<5	<5	11	<5	<5	<5	<5	<5	<5
Toluene	750	67	<5	43	6	7.6	<5	<5	<5	<5	<5	<5
Xylenes (total)	620	43	<10	10	<10	<10	<10	<10	<10	<10	<10	<10
Polynuclear Aromatic Hydrocarbons (ug/L):												
Acenaphthene	--	< 1.0	<5	--	--	--	<5	--	--	<5	--	--
Acenaphthylene	--	2.0	<5	--	--	--	<5	--	--	<5	--	--
Anthracene	--	< 1.0	<1	--	--	--	<1	--	--	<1	--	--
Benzo(a)anthracene	--	< 1.0	<0.1	--	--	--	<0.1	--	--	<0.1	--	--
Benzo(a)pyrene	0.7	< 1.0	<0.1	--	--	--	<0.1	--	--	<0.1	--	--
Benzo(b)fluoranthene	--	< 1.0	<0.1	--	--	--	<0.1	--	--	<0.1	--	--
Benzo(ghi)perylene	--	< 1.0	<0.1	--	--	--	<0.1	--	--	<0.1	--	--
Benzo(k)fluoranthene	--	< 1.0	<0.1	--	--	--	<0.1	--	--	<0.1	--	--
Chrysene	--	< 1.0	<1	--	--	--	<1	--	--	<1	--	--
Dibenzo(a,h)anthracene	--	< 1.0	<0.1	--	--	--	<0.1	--	--	<0.1	--	--
Fluoranthene	--	< 1.0	<1	--	--	--	<1	--	--	<1	--	--
Fluorene	--	< 1.0	<1	--	--	--	<1	--	--	<1	--	--
Indeno(1,2,3-cd)pyrene	--	< 1.0	<0.1	--	--	--	<0.1	--	--	<0.1	--	--
Naphthalene	--	< 1.0	<5	--	--	--	<5	--	--	<5	--	--
Phenanthrene	--	< 1.0	<1	--	--	--	<1	--	--	<1	--	--
Pyrene	--	< 1.0	<1	--	--	--	<1	--	--	<1	--	--
1-Methylnaphthalene	--	4.0	--	--	--	--		--	--		--	--
2-Methylnaphthalene	--	1.0	--	--	--	--		--	--		--	--
Total naphthalene/ monomethylnaphthalenes	30	5.0	--	--	--	--	0	--	--	0	--	--

Notes:

mg/L	Milligrams per liter, equivalent to parts per million.
ug/L	Micrograms per liter, equivalent to parts per billion.
umhos/cm	Micromhos per centimeter.
<10	Indicates that the parameter was not identified above the noted laboratory detection limit.
1.12	Boldface type indicates that the parameter was identified at a concentration exceeding its respective water quality standard.
--	Indicates that no standard has been published/parameter was not analyzed.
WQCC	New Mexico Water Quality Control Commission.
NS	Well not sampled due to presence of separate-phase hydrocarbons.

Table 4. Historical Groundwater Analytical Results,
Marathon Oil Company, Former Bertha Barber Tank Battery, Lea County, New Mexico.

Parameter	WQCC Standards	MW-8 8/17/99	MW-8 9/22/99	MW-8 12/15/99	MW-9 8/17/99	MW-9 9/22/99	MW-9 12/15/99	MW-10 8/17/99	MW-10 9/22/99	MW-10 12/15/99 (NS)	MW-11 8/17/99	MW-11 9/22/99	MW-11 12/15/99
General Chemistry													
Total Dissolved Solids (mg/l)	1,000	**3,300**	--	**3,500**	**2,300**	--	**2,300**	**4,400**	--	--	**2,300**	--	**2,800**
pH (s.u.)	6 to 9	--	--	--	--	--	--	--	--	--	--	--	--
Alkalinity, Bicarbonate (mg/l)	--	--	--	--	--	--	--	--	--	--	--	--	--
Alkalinity, Carbonate (mg/l)	--	--	--	--	--	--	--	--	--	--	--	--	--
Bromide (mg/l)	--	--	--	--	--	--	--	--	--	--	--	--	--
Chloride (mg/l)	250	**1,860**	**1,900**	**2,100**	**1,100**	**1,100**	**1,000**	**2,370**	**2,200**	--	**1,020**	**1,100**	**1,500**
Specific Conductivity (umhos/cm)	--	--	--	--	--	--	--	--	--	--	--	--	--
Fluoride (mg/l)	1.6	<5.0	--	--	<5.0	--	--	<5.0	--	--	<5.0	--	--
Nitrate (mg/l)	10	<1.0	--	--	<1.0	--	--	<1.0	--	--	<1.0	--	--
Silica, Free as SiO_2 (mg/l)	--	--	--	--	--	--	--	--	--	--	--	--	--
Sulfate (mg/l)	600	44	--	--	97	--	--	184	--	--	354	--	--
Metals (mg/L):													
Aluminum	5	<0.05	--	--	<0.05	--	--	<0.05	--	--	<0.05	--	--
Antimony	--	--	--	--	--	--	--	--	--	--	--	--	--
Arsenic	0.1	<0.02	--	--	<0.02	--	--	0.02	--	--	<0.02	--	--
Barium	1	**6.16**	--	0.26	0.21	--	0.26	0.14	--	--	0.14	--	0.16
Beryllium	--	--	--	--	--	--	--	--	--	--	--	--	--
Boron	0.75	0.47	--	--	0.4	--	--	0.44	--	--	0.39	--	--
Cadmium	0.01	<0.005	--	--	<0.005	--	--	<0.005	--	--	<0.005	--	--
Calcium	--	407	--	--	319	--	--	575	--	--	300	--	--
Chromium	0.05	<0.01	--	--	<0.01	--	--	<0.01	--	--	<0.01	--	--
Cobalt	0.05	<0.02	--	--	<0.02	--	--	<0.02	--	--	<0.02	--	--
Copper	1	<0.01	--	--	<0.01	--	--	<0.01	--	--	<0.01	--	--
Iron	1	0.8	--	0.17	0.11	--	<0.05	0.61	--	--	<0.05	--	<0.05
Lead	0.05	<0.05	--	--	<0.05	--	--	<0.05	--	--	<0.05	--	--
Magnesium	--	151	--	113	104	--	79.1	149	--	--	84.6	--	98.6
Manganese	0.2	**0.34**	--	--	**0.22**	--	--	0.17	--	--	0.17	--	--
Molybdenum	1	<0.05	--	--	<0.05	--	--	<0.05	--	--	<0.05	--	--
Nickel	0.2	<0.01	--	--	<0.01	--	--	0.04	--	--	<0.01	--	--
Potassium	--	13.1	--	--	8.4	--	--	11.1	--	--	9.5	--	--
Selenium	0.05	<0.02	--	--	<0.02	--	--	<0.02	--	--	<0.02	--	--
Silver	0.05	<0.01	--	--	<0.01	--	--	<0.01	--	--	<0.01	--	--
Sodium	--	730	--	--	490	--	--	880	--	--	460	--	--
Thallium		--	--	--	--	--	--	--	--	--	--	--	--
Vanadium		--	--	--	--	--	--	--	--	--	--	--	--
Zinc	10	<0.01	--	--	<0.01	--	--	<0.01	--	--	<0.01	--	--
Mercury	0.002	<0.0002	--	--	<0.0002	--	--	<0.0002	--	--	<0.0002	--	--
Volatile Organic Compounds (ug/L):													
Benzene	10	<5	<5	<5	**20**	8	<5	**12000**	**2900**	--	<5	<5	<5
Ethylbenzene	750	<5	<5	<5	<5	<5	<5	160	**800**	--	<5	<5	<5
Toluene	750	<5	<5	<5	<5	<5	<5	**1700**	520	--	<5	<5	<5
Xylenes (total)	620	<10	<10	<10	<10	<10	<10	400	600	--	<10	<10	<10
Polynuclear Aromatic Hydrocarbons (ug/L):													
Acenaphthene	--	<5	--	--	<5	--	--	<5	--	--	<5	--	--
Acenaphthylene	--	<5	--	--	<5	--	--	<5	--	--	<5	--	--
Anthracene	--	<1	--	--	<1	--	--	<1	--	--	<1	--	--
Benzo(a)anthracene	--	<0.1	--	--	<0.1	--	--	<0.1	--	--	<0.1	--	--
Benzo(a)pyrene	0.7	<0.1	--	--	<0.1	--	--	<0.1	--	--	<0.1	--	--
Benzo(b)fluoranthene	--	<0.1	--	--	<0.1	--	--	<0.1	--	--	<0.1	--	--
Benzo(ghi)perylene	--	<0.1	--	--	<0.1	--	--	<0.1	--	--	<0.1	--	--
Benzo(k)fluoranthene	--	<0.1	--	--	<0.1	--	--	<0.1	--	--	<0.1	--	--
Chrysene	--	<1	--	--	<1	--	--	<1	--	--	<1	--	--
Dibenzo(a,h)anthracene	--	<0.1	--	--	<0.1	--	--	<0.1	--	--	<0.1	--	--
Fluoranthene	--	<1	--	--	<1	--	--	<1	--	--	<1	--	--
Fluorene	--	<1	--	--	<1	--	--	<1	--	--	<1	--	--
Indeno(1,2,3-cd)pyrene	--	<0.1	--	--	<0.1	--	--	<0.1	--	--	<0.1	--	--
Naphthalene	--	<5	--	--	<5	--	--	<5	--	--	<5	--	--
Phenanthrene	--	<1	--	--	<1	--	--	<1	--	--	<1	--	--
Pyrene	--	<1	--	--	<1	--	--	<1	--	--	<1	--	--
1-Methylnaphthalene	--		--	--	--	--	--	--	--	--	--	--	--
2-Methylnaphthalene	--		--	--	--	--	--	--	--	--	--	--	--
Total naphthalene/ monomethylnaphthalenes	30	0	--	--	0	--	--	0	--	--	0		--

Notes:

mg/L	Milligrams per liter, equivalent to parts per million.
ug/L	Micrograms per liter, equivalent to parts per billion.
umhos/cm	Micromhos per centimeter.
<10	Indicates that the parameter was not identified above the noted laboratory detection limit.
1.12	Boldface type indicates that the parameter was identified at a concentration exceeding its respective water quality standard.
--	Indicates that no standard has been published/parameter was not analyzed.
WQCC	New Mexico Water Quality Control Commission.
NS	Well not sampled due to presence of separate-phase hydrocarbons.

Table 4. Historical Groundwater Analytical Results,
Marathon Oil Company, Former Bertha Barber Tank Battery, Lea County, New Mexico.

Parameter	WQCC Standards	MW-12 (PZ-2) 8/17/99	MW-12 (PZ-2) 9/22/99	MW-12 (PZ-2) 12/15/99	MW-13 (PZ-1) 8/17/99	MW-13 (PZ-1) 9/22/99	MW-13 (PZ-1) 12/15/99	PZ-3 8/17/99	PZ-3 9/22/99	PZ-4 8/17/99	PZ-4 9/22/99
General Chemistry											
Total Dissolved Solids (mg/l)	1,000	**7,100**	--	**7,300**	**3,500**	--	**3,500**	**4,100**	--	**5,900**	--
pH (s.u.)	6 to 9	--	--	--	--	--	--	--	--	--	--
Alkalinity, Bicarbonate (mg/l)	--	--	--	--	--	--	--	--	--	--	--
Alkalinity, Carbonate (mg/l)	--	--	--	--	--	--	--	--	--	--	--
Bromide (mg/l)	--	--	--	--	--	--	--	--	--	--	--
Chloride (mg/l)	250	**4,160**	**4,400**	**2,400**	**1,920**	**1,600**	**1,900**	**2,130**	**1,700**	**3,220**	**3,300**
Specific Conductivity (umhos/cm)	--	--	--	--	--	--	--	--	--	--	--
Fluoride (mg/l)	1.6	<5.0	--	--	<5.0	--	--	<5.0	--	<5.0	--
Nitrate (mg/l)	10	<1.0	--	--	<1.0	--	--	<1.0	--	<1.0	--
Silica, Free as SiO_2 (mg/l)	--	--	--	--	--	--	--	--	--	--	--
Sulfate (mg/l)	600	303	--	--	170	--	--	124	--	233	--
Metals (mg/L):											
Aluminum	5	<0.05	--	--	<0.05	--	--	<0.05	--	<0.05	--
Antimony	--	--	--	--	--	--	--	--	--	--	--
Arsenic	0.1	<0.02	--	--	<0.02	--	--	<0.02	--	<0.02	--
Barium	1	0.16	--	0.14	0.16	--	0.13	0.2	--	0.17	--
Beryllium	--	--	--	--	--	--	--	--	--	--	--
Boron	0.75	0.49	--	--	0.38	--	--	0.47	--	0.41	--
Cadmium	0.01	<0.005	--	--	<0.005	--	--	<0.005	--	<0.005	--
Calcium	--	974	--	--	339	--	--	524	--	852	--
Chromium	0.05	<0.01	--	--	<0.01	--	--	<0.01	--	<0.01	--
Cobalt	0.05	<0.02	--	--	**0.06**	--	--	<0.02	--	<0.02	--
Copper	1	<0.01	--	--	<0.01	--	--	<0.01	--	<0.01	--
Iron	1	0.11	--	<0.05	<0.05	--	<0.05	1.12	--	<0.05	--
Lead	0.05	<0.05	--	--	<0.05	--	--	<0.05	--	<0.05	--
Magnesium	--	250	--	226	143	--	152	148	--	203	--
Manganese	0.2	0.13	--	--	0.09	--	--	0.18	--	0.06	--
Molybdenum	1	<0.05	--	--	<0.05	--	--	<0.05	--	<0.05	--
Nickel	0.2	<0.01	--	--	0.06	--	--	<0.01	--	<0.01	--
Potassium	--	18.6	--	--	24.3	--	--	12.8	--	16.1	--
Selenium	0.05	<0.02	--	--	<0.02	--	--	<0.02	--	<0.02	--
Silver	0.05	<0.01	--	--	<0.01	--	--	<0.01	--	<0.01	--
Sodium	--	1540	--	--	860	--	--	730	--	1,070	--
Thallium		--	--	--	--	--	--	--	--	--	--
Vanadium		--	--	--	--	--	--	--	--	--	--
Zinc	10	<0.01	--	--	<0.01	--	--	<0.01	--	<0.01	--
Mercury	0.002	<0.0002	--	--	<0.0002	--	--	<0.0002	--	<0.0002	--
Volatile Organic Compounds (ug/L):											
Benzene	10	<5	<5	<5	<5	<5	<5	**17**	9	<5	<5
Ethylbenzene	750	<5	<5	<5	<5	<5	<5	<5	<5	<5	<5
Toluene	750	<5	<5	<5	<5	<5	<5	<5	<5	<5	<5
Xylenes (total)	620	<10	<10	<10	<10	<10	<10	<10	<10	<10	<10
Polynuclear Aromatic Hydrocarbons (ug/L):											
Acenaphthene	--	<5	--	--	<5	--	--	<5	--	<5	--
Acenaphthylene	--	<5	--	--	<5	--	--	<5	--	<5	--
Anthracene	--	<1	--	--	<1	--	--	<1	--	<1	--
Benzo(a)anthracene	--	<0.1	--	--	<0.1	--	--	<0.1	--	<0.1	--
Benzo(a)pyrene	0.7	<0.1	--	--	<0.1	--	--	<0.1	--	<0.1	--
Benzo(b)fluoranthene	--	<0.1	--	--	<0.1	--	--	<0.1	--	<0.1	--
Benzo(ghi)perylene	--	<0.1	--	--	<0.1	--	--	<0.1	--	<0.1	--
Benzo(k)fluoranthene	--	<0.1	--	--	<0.1	--	--	<0.1	--	<0.1	--
Chrysene	--	<1	--	--	<1	--	--	<1	--	<1	--
Dibenzo(a,h)anthracene	--	<0.1	--	--	<0.1	--	--	<0.1	--	<0.1	--
Fluoranthene	--	<1	--	--	<1	--	--	<1	--	<1	--
Fluorene	--	<1	--	--	<1	--	--	<1	--	<1	--
Indeno(1,2,3-cd)pyrene	--	<0.1	--	--	<0.1	--	--	<0.1	--	<0.1	--
Naphthalene	--	<5	--	--	<5	--	--	<5	--	<5	--
Phenanthrene	--	<1	--	--	<1	--	--	<1	--	<1	--
Pyrene	--	<1	--	--	<1	--	--	<1	--	<1	--
1-Methylnaphthalene	--	--	--	--	--	--	--	--	--	--	--
2-Methylnaphthalene	--	--	--	--	--	--	--	--	--	--	--
Total naphthalene/ monomethylnaphthalenes	30	0	--	--	0	--	--	0	--	0	--

Notes:

mg/L	Milligrams per liter, equivalent to parts per million.
ug/L	Micrograms per liter, equivalent to parts per billion.
umhos/cm	Micromhos per centimeter.
<10	Indicates that the parameter was not identified above the noted laboratory detection limit.
1.12	Boldface type indicates that the parameter was identified at a concentration exceeding its respective water quality standard.
--	Indicates that no standard has been published/parameter was not analyzed.
WQCC	New Mexico Water Quality Control Commission.
NS	Well not sampled due to presence of separate-phase hydrocarbons.

Table 5. Historical Fluid Level Data, December 1998 - December 1999
Marathon Oil Company, Former Bertha Barber Tank Battery, Lea County, New Mexico.

Well ID	Date	Measuring Point Elevation (feet amsl)	Depth to Water (feet bmp)	Product Thickness (feet)	Corrected Water-Level Elevation (feet amsl)
MW-1	12/14/99	3561.20	36.03	0.03	3525.19
	09/22/99	3561.20	35.79	sheen	3525.41
	08/27/99	3561.20	35.66	0.02	3525.55
	07/16/99	3561.20	35.48	0.005	3525.72
	03/31/99	3561.20	35.82	0.05	3525.42
	12/30/98	3561.20	35.83	0	3525.37
MW-2	12/14/99	3561.69	36.62	0	3525.07
	09/22/99	3561.69	36.27	0	3525.42
	08/27/99	3561.69	36.13	0.01	3525.57
	07/16/99	3561.69	35.95	0	3525.74
	03/31/99	3561.69	36.33	0	3525.36
	12/30/98	3561.69	36.34	0	3525.35
MW-3	12/14/99	3563.00	38.10	0	3524.90
	09/22/99	3563.00	37.59	0	3525.41
	08/27/99	3563.00	37.48	0	3525.52
	07/16/99	3563.00	37.31	0	3525.69
	03/31/99	3563.00	37.67	0	3525.33
	12/30/98	3563.00	37.65	0	3525.35
MW-4	12/14/99	3563.01	37.85	0	3525.16
	09/22/99	3563.01	37.57	0	3525.44
	08/27/99	3563.01	37.46	0	3525.55
	07/16/99	3563.01	37.28	0	3525.73
	03/31/99	3563.01	37.66	0	3525.35
	12/30/98	3563.01	37.66	0	3525.35
MW-5	12/14/99	3561.10	35.95	0	3525.15
	09/22/99	3561.10	35.68	0	3525.42
	08/27/99	3561.10	35.56	0	3525.54
	07/16/99	3561.10	35.38	0	3525.72
	03/31/99	3561.10	35.75	0	3525.35
	12/30/98	3561.10	35.73	0	3525.37
MW-6	12/14/99	3561.25	36.10	0	3525.15
	09/22/99	3561.25	35.75	0	3525.50
	08/27/99	3561.25	35.69	0	3525.56
MW-7	12/14/99	3562.44	37.51	0	3524.93
	09/22/99	3562.44	38.20	0	3524.24
	08/27/99	3562.44	38.15	0	3524.29
MW-8	12/14/99	3561.39	36.44	0	3524.95
	09/22/99	3561.39	37.26	0	3524.13
	08/27/99	3561.39	37.21	0	3524.18

Notes:
Water level elevations corrected for condensate using a specific gravity of 0.75
feet amsl Feet above mean sea level
feet bmp Feet below measuring point
D Well was dry at time of gauging
-- No data obtained

Table 5. Historical Fluid Level Data, December 1998 - December 1999
Marathon Oil Company, Former Bertha Barber Tank Battery, Lea County, New Mexico.

Well ID	Date	Measuring Point Elevation (feet amsl)	Depth to Water (feet bmp)	Product Thickness (feet)	Corrected Water-Level Elevation (feet amsl)
MW-9	12/14/99	3563.59	38.48	0	3525.11
	09/22/99	3563.59	36.23	0	3527.36
	08/27/99	3563.59	36.14	0	3527.45
MW-10	12/14/99	3560.51	35.33	0	3525.18
	09/22/99	3560.51	34.96	0	3525.55
	08/27/99	3560.51	34.87	0	3525.64
MW-11	12/14/99	3565.44	40.61	0	3524.83
	09/22/99	3565.44	40.37	0	3525.07
	08/27/99	3565.44	40.34	0	3525.10
MW-12 (PZ-2)	12/14/99	3562.11	36.95	0	3525.16
	09/22/99	3562.11	36.69	0	3525.42
	08/27/99	3562.11	36.65	0	3525.46
MW-13 (PZ-1)	12/14/99	3559.67	34.96	0	3524.71
	09/22/99	3559.67	34.20	0	3525.47
	08/27/99	3559.67	34.09	0	3525.58
PZ-3	09/22/99	3565.24	34.85	0	3530.39
	08/27/99	3565.24	39.75	0	3525.49
PZ-4	09/22/99	3563.99	38.42	0	3525.57
	08/27/99	3563.99	38.51	0	3525.48

Notes:
Water level elevations corrected for condensate using a specific gravity of 0.75
feet amsl Feet above mean sea level
feet bmp Feet below measuring point
D Well was dry at time of gauging
-- No data obtained

Table 6. Summary of Water Wells Within One Mile,
Former Bertha Barber Tank Battery, Lea County, New Mexico.

	Location				Completion	Chloride	Use	Owner
	Township	Range	Section	Quarter	Date	Concentration (mg/L)		
Upgradient/Cross-Gradient								
1	19S	37E	31	111	3/14/58	--	DOM	W.C. Byrd
2	19S	37E	31	111	2/9/62	--	DOM	W.C. Byrd
3	19S	37E	31	224	10/18/51	--	DOM	Gulf Oil Corp.
4	19S	37E	31	24	10/12/88	--	STK	Jimmy B. Cooper
5	19S	37E	31	240	11/21/63	--	DOM	C.R. Jordan
6	19S	37E	31	240	3/22/65	--	DOM	C.R. Jordan
7	19S	37E	31	240	4/1/69	--	DOM	C.R. Jordan
8	19S	37E	31	244	12/11/63	--	IRR	C.R. Jordan
9	19S	37E	31	334	12/18/70	--	OWD	Moran Oil Prod.
10	19S	37E	31	414	10/18/51	--	NOT	Gulf Oil Corp.
11	19S	37E	31	420	4/1/63	--	NOT	C.R. Jordan
12	19S	37E	31	440	3/28/63	--	NOT	C.R. Jordan
13	19S	37E	32	31440	10/23/79	224	DOM	--
14	19S	37E	32	411343	10/25/79	260	DOM	--
15	19S	37E	32	411343	11/7/84	134	DOM	--
16	19S	37E	32	41322	10/23/79	226	IRR	--
17	19S	37E	32	41322	9/20/84	235	IRR	--
18	19S	37E	32	110	1/14/65	--	NOT	Alton Roberts
19	19S	37E	32	110	3/26/69	--	DOM	Vernon Clark
20	19S	37E	32	200	5/22/59	--	DOM	A.G. Watson
21	19S	37E	32	212	12/14/56	--	DOM	Monument Methodist
22	19S	37E	32	220	2/20/62	--	DOM	Jimmie Cooper
23	19S	37E	32	220	4/29/65	--	MUN	Monument Water Users Coop.
24	19S	37E	32	240	5/1/25	--	IRR	E.A. Andersen
25	19S	37E	32	300	2/19/63	--	STK	J.D. Barber
26	19S	37E	32	400	7/24/58	--	DOM	Robert L. Pate
27	19S	37E	32	410	1/14/53	--	NOT	V.F. Collins
28	19S	37E	32	410	5/2/63	--	NOT	Edwin Johnston
29	19S	37E	32	410	5/28/74	--	NOT	Edwin Johnston
30	19S	37E	32	411	11/10/76	--	IRR	Edwin Johnston
31	19S	37E	32	443	10/18/51	--	NOT	Gulf Oil Corp.
32	19S	37E	33	1	6/6/85	--	DOM	Darel Taylor
33	19S	37E	33	1	4/27/94	--	DOM	Elmer Morrow
34	19S	37E	33	210	4/16/71	--	CCS	Northern Natural Gas
35	19S	37E	33	300	4/1/60	--	DOM	M.D. Tilley
36	19S	37E	33	300	2/10/62	--	DOM	James A. Colbert
37	19S	37E	33	300	2/13/62	--	DOM	Vernon Clark
38	19S	37E	33	300	7/1/62	--	DOM	I.A. Welch
39	19S	37E	33	330	9/8/58	--	DOM	J.A. Hammer
40	19S	37E	33	330	2/21/62	--	DOM	Buddy Adams
41	19S	37E	33	330	2/21/62	--	DOM	E.D. Barnes
42	19S	37E	33	330	3/14/62	--	DOM	Roscoe Rogers
43	19S	37E	33	331	3/16/83	--	DOM	Joe R. Williams

Notes:

DOM	Domestic
SRO	Secondary recovery of oil
NOT	Well not completed
STK	Livestock
OWD	Oil well drilling (temporary)
IRR	Irrigation
MUN	Municipal
mg/L	Milligrams per liter
--	Information not available

Table 6. Summary of Water Wells Within One Mile,
Former Bertha Barber Tank Battery, Lea County, New Mexico.

	Location				Completion	Chloride	Use	Owner
	Township	Range	Section	Quarter	Date	Concentration (mg/L)		
44	19S	37E	33	331	2/23/62	--	DOM	E.R. Glenn
45	19S	37E	33	331	2/21/62	--	DOM	Bill A. Hammer
46	19S	37E	33	333	1/26/53	--	STK	Clyde Spears
47	20S	37E	4	11	4/10/89	--	STK	Jimmie Cooper
48	20S	37E	4	11114	4/2/55	425	DOM	--
49	20S	37E	4	11114	9/9/58	325	NOT	--
50	20S	37E	4	11114	4/2/84	450	DOM	--
51	20S	37E	4	221321	4/22/55	51	DOM	--
52	20S	37E	4	221321	9/9/58	47	DOM	--
53	20S	37E	4	221321	7/14/77	106	DOM	--
54	20S	37E	4	221321	10/23/79	214	STK	--
55	20S	37E	4	221321	2/6/85	81	DOM	--
56	20S	37E	5	22144	11/29/79	258	DOM	--
57	20S	37E	5	22144	9/26/84	314	DOM	--
58	20S	37E	5	22144	6/19/90	315	DOM	--
59	20S	37E	5	22144	10/17/95	286	DOM	--
60	20S	37E	5	130	5/27/52	--	OWD	Marathon Oil Co.
61	20S	37E	5	222	1/8/86	--	DOM	Davis Dolores Nash
62	20S	37E	5	230	2/11/54	--	OWD	The Texas Co.
63	20S	37E	5	230	8/6/64	--	NOT	Cooper Bros.
64	20S	37E	5	331	9/19/52	--	OWD	Exploration Drg. Co.
65	20S	37E	5	333	3/10/54	--	OWD	Amerada Petro Corp.
66	20S	37E	5	333	3/15/54	--	OWD	Amerada Petro Corp.
67	20S	37E	5	340	3/23/53	--	OWD	Moran Oil Prod.
68	20S	37E	6	140	3/12/58	--	OWD	The Texas Co.
69	20S	37E	6	233	3/7/55	--	OWD	Amerada Petro Corp.
70	20S	37E	6	3423	11/27/53	--	OWD	Moran Drilling Co.
71	20S	37E	6	414	6/20/51	--	OWD	Gulf Oil Corp.
72	20S	37E	6	414	7/14/52	--	NOT	Gulf Oil Corp.
73	20S	37E	6	423	3/31/61	--	OWD	Gulf Oil Corp.
74	20S	37E	6	434	3/14/54	--	OWD	Amerada Petro Corp.
75	20S	37E	7	210	1/15/54	--	OWD	Moran Oil Prod.
76	20S	37E	7	230	4/21/54	--	OWD	Moran Oil Prod.
77	20S	37E	7	310	8/7/61	--	NOT	Mrs. Tommie Cooper
78	20S	37E	7	24331	11/9/79	1248	STK	--
79	20S	37E	7	24331	2/13/85	2680	STK	--
80	20S	37E	8	130	7/9/53	--	OWD	Sinclair Oil & Gas
81	20S	37E	8	144	2/17/54	--	OWD	Moran Oil Prod.
82	20S	37E	8	222	4/3/53	--	OWD	Gackle Drg. Co.
83	20S	37E	8	230	10/8/76	--	IRR	Jimmy Cooper
84	20S	37E	8	231	7/29/53	--	OWD	Gulf Oil Corp.
85	20S	37E	8	2441	5/17/78	--	DOM	Jimmy Cooper
86	20S	37E	8	320	10/8/76	--	IRR	Jimmy Cooper
87	20S	37E	8	321	1/21/54	--	OWD	Amerada Petro Corp.
88	20S	37E	8	4	11/21/84	--	DOM	Jimmy Cooper

Notes:

DOM	Domestic
SRO	Secondary recovery of oil
NOT	Well not completed
STK	Livestock
OWD	Oil well drilling (temporary)
IRR	Irrigation
MUN	Municipal
mg/L	Milligrams per liter
--	Information not available

Table 6. Summary of Water Wells Within One Mile,
Former Bertha Barber Tank Battery, Lea County, New Mexico.

	Location				Completion	Chloride	Use	Owner
	Township	Range	Section	Quarter	Date	Concentration (mg/L)		
89	20S	37E	8	4114	10/8/76	--	DOM	Jimmy Cooper
90	20S	37E	8	42	1936	--	DOM	Jimmy Cooper
91	20S	37E	8	42	11/26/84	--	DOM	Jimmy Cooper
92	20S	37E	8	42	1936	--	NOT	Jimmy Cooper
93	20S	37E	8	42	11/26/84	--	NOT	Jimmy Cooper
94	20S	37E	8	4224	10/8/76	--	DOM	Jimmy Cooper
95	20S	37E	8	423223	10/25/79	520	DOM	--
96	20S	37E	8	423223	9/24/84	886	STK	--
97	20S	37E	8	423223	4/14/90	780	STK	--
Downgradient								
98	20S	37E	4	341	1948	--	DOM	Elsie M. Reeves, et al
99	20S	37E	5	430	7/9/53	--	DOM	Elsie M. Reeves, et al
100	20S	37E	8	244124	11/29/79	868	SRO	--
101	20S	37E	9	110	5/4/35	--	NOT	Lea County Water
102	20S	37E	9	110	5/4/35	--	NOT	Lea County Water
103	20S	37E	9	110	5/4/35	--	NOT	Lea County Water
104	20S	37E	9	110	5/4/35	--	NOT	Lea County Water
105	20S	37E	9	110	5/4/35	--	NOT	Lea County Water
106	20S	37E	9	110	5/4/35	--	NOT	Lea County Water
107	20S	37E	9	112122	11/29/79	176	STK	--
108	20S	37E	9	33122	10/25/79	584	STK	--

Notes:

DOM	Domestic
SRO	Secondary recovery of oil
NOT	Well not completed
STK	Livestock
OWD	Oil well drilling (temporary)
IRR	Irrigation
MUN	Municipal
mg/L	Milligrams per liter
--	Information not available

Table 7. Anticipated Project Schedule,
Former Bertha Barber Tank Battery, Lea County, New Mexico.

Event	Month	Jan-00	Feb-00	Mar-00	Apr-00	May-00	Jun-00	Jul-00	Aug-00	Sep-00	Oct-00	Nov-00	Dec-00
Submission of Site Investigation Report to OCD													
OCD approval of Site Investigation Report													
Preparation of Stage 2 Abatement Plan													
Submission of Stage 2 Abatement Plan													
Quarterly groundwater monitoring event													

Groundwater Monitoring Plan:

Month	Wells	Analytical Parameters
June	MW-1 through MW-13	BTEX
September	MW-1 through MW-13	BTEX, PAHs, chloride, TDS, selected metals (iron, manganese, barium - dissolved)
December	MW-1 through MW-13	BTEX
March	MW-1 through MW-13	BTEX

Notes:

BTEX Benzene, toluene, ethylbenzene, total xylenes
PAH Polynuclear aromatic hydrocarbons
TDS Total dissolved solids
OCD New Mexico Energy, Minerals, and Natural Resources Department, Oil Conservation Division

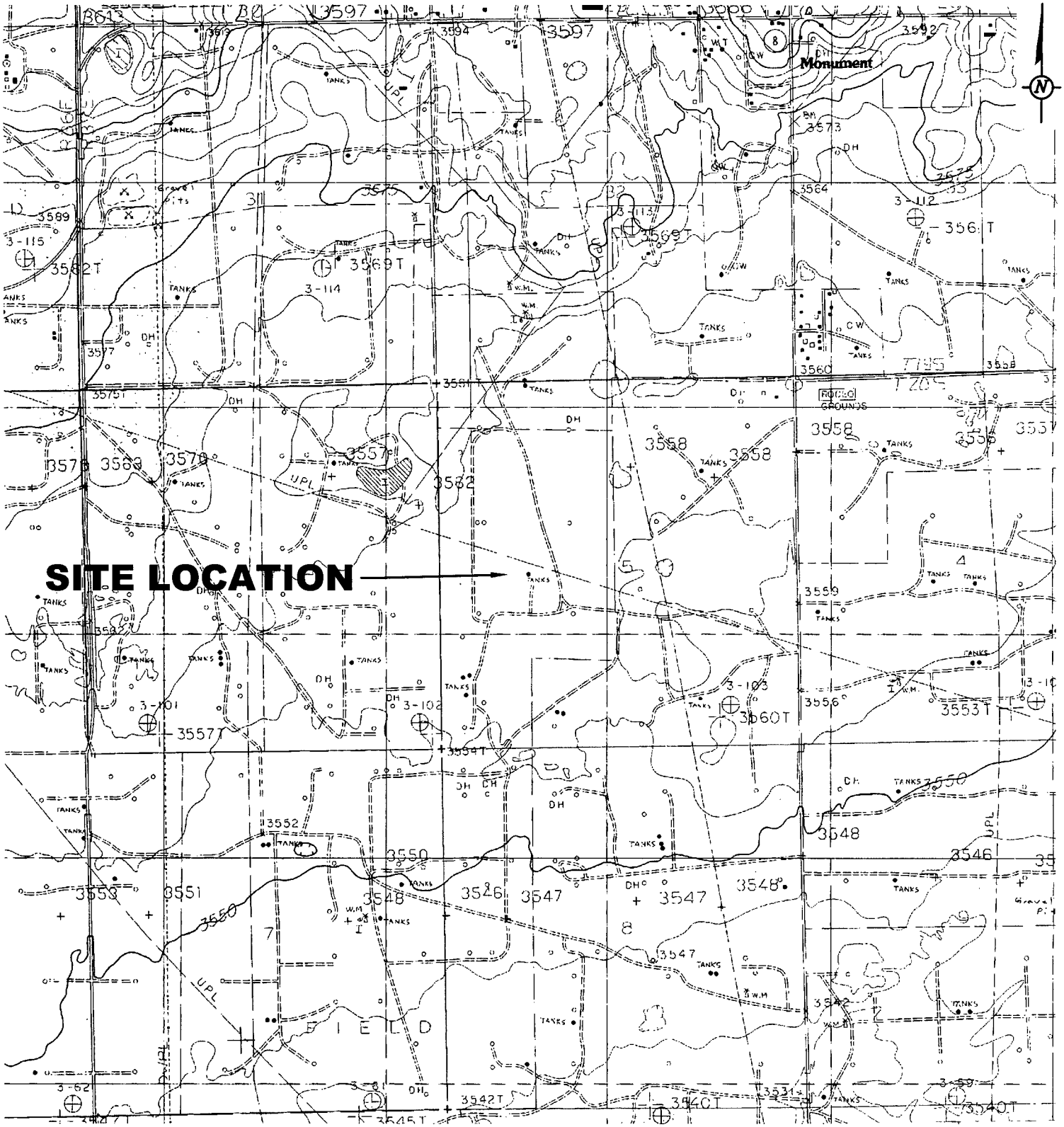

SOURCE: USGS 7.5 MIN. TOPOGRAPHICAL QUADRANGLE:
MONUMENT SOUTH, N. MEX., 1985

0 2000
SCALE IN FEET

G:\APROJECT\MOC\BERTHA BARBER\CADD\SITELOC.DWG

ARCADIS
GERAGHTY & MILLER

DRAWN M. WASILEWSKI	DATE 3/26/99	PROJECT MANAGER P. MILIONIS	DEPARTMENT MANAGER D. SOUSA
SITE LOCATION		LEAD DESIGN PROF. M. HANSEN	CHECKED J. HORST
FORMER BERTHA BARBER TANK BATTERY LEA COUNTY, NEW MEXICO		PROJECT NUMBER NP000449.0001	DRAWING NUMBER 1

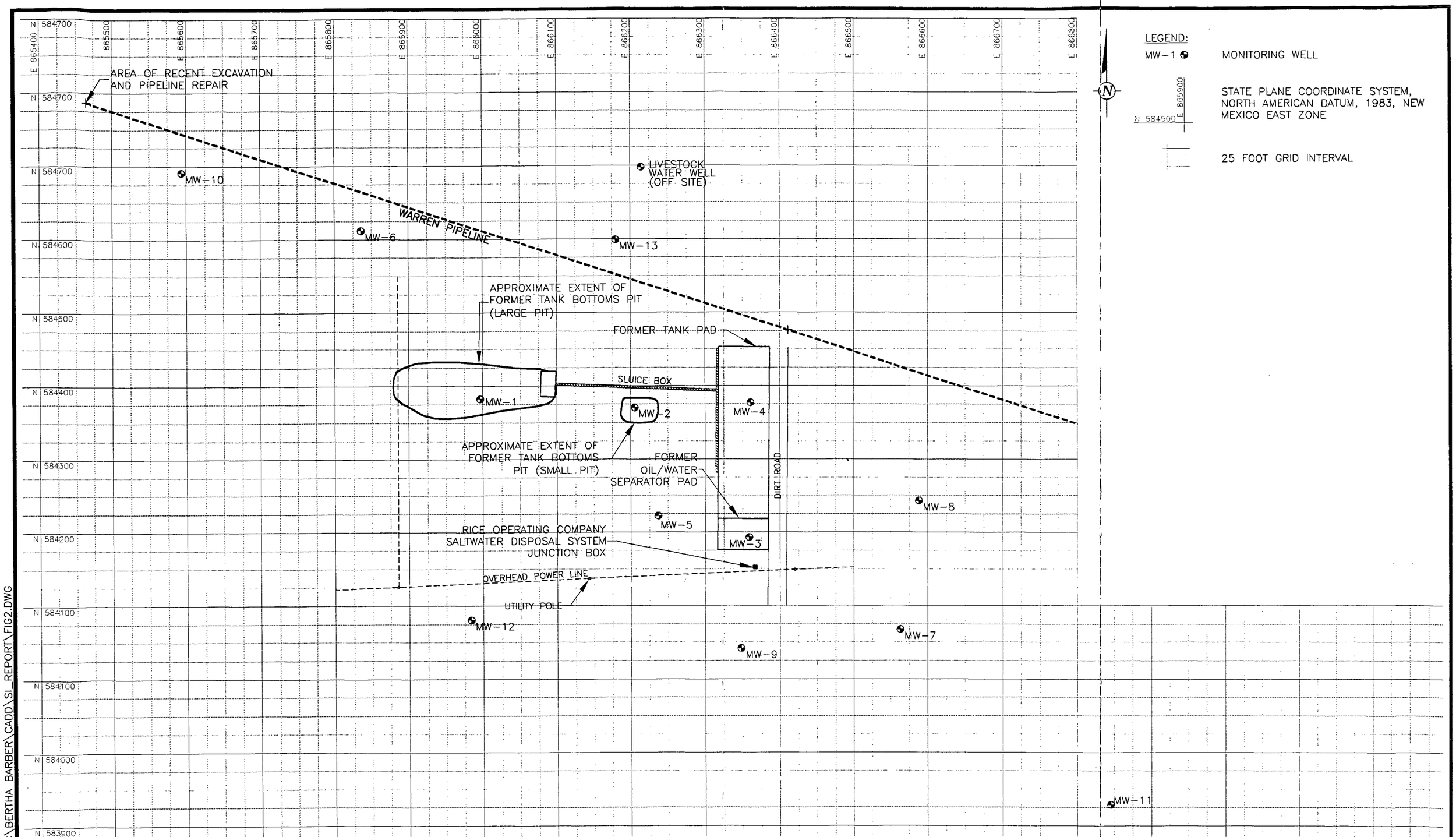

G:\APROJECT\MOC\BERTHA BARBER\CADD\SI_REPORT\FIG2.DWG

0 120
SCALE IN FEET

NO.	DATE	REVISION DESCRIPTION	BY / CKD

ARCADIS GERAGHTY & MILLER
3000 Cabot Blvd West
Suite 3004, Langhorne, Pa 19047
Tel: 215/752-6840 Fax: 215/752-6879

FORMER BERTHA BARBER TANK BATTERY
LEA COUNTY, NEW MEXICO

SITE LAYOUT

DRAWN	DATE	PROJECT MANAGER	DEPARTMENT MANAGER
M. WASILEWSKI	12/8/99	P. MILIONIS	D. SOUSA
		LEAD DESIGN PROF. M. HANSEN	CHECKED J. HORST
		PROJECT NUMBER NP000449.0002	DRAWING NUMBER 2

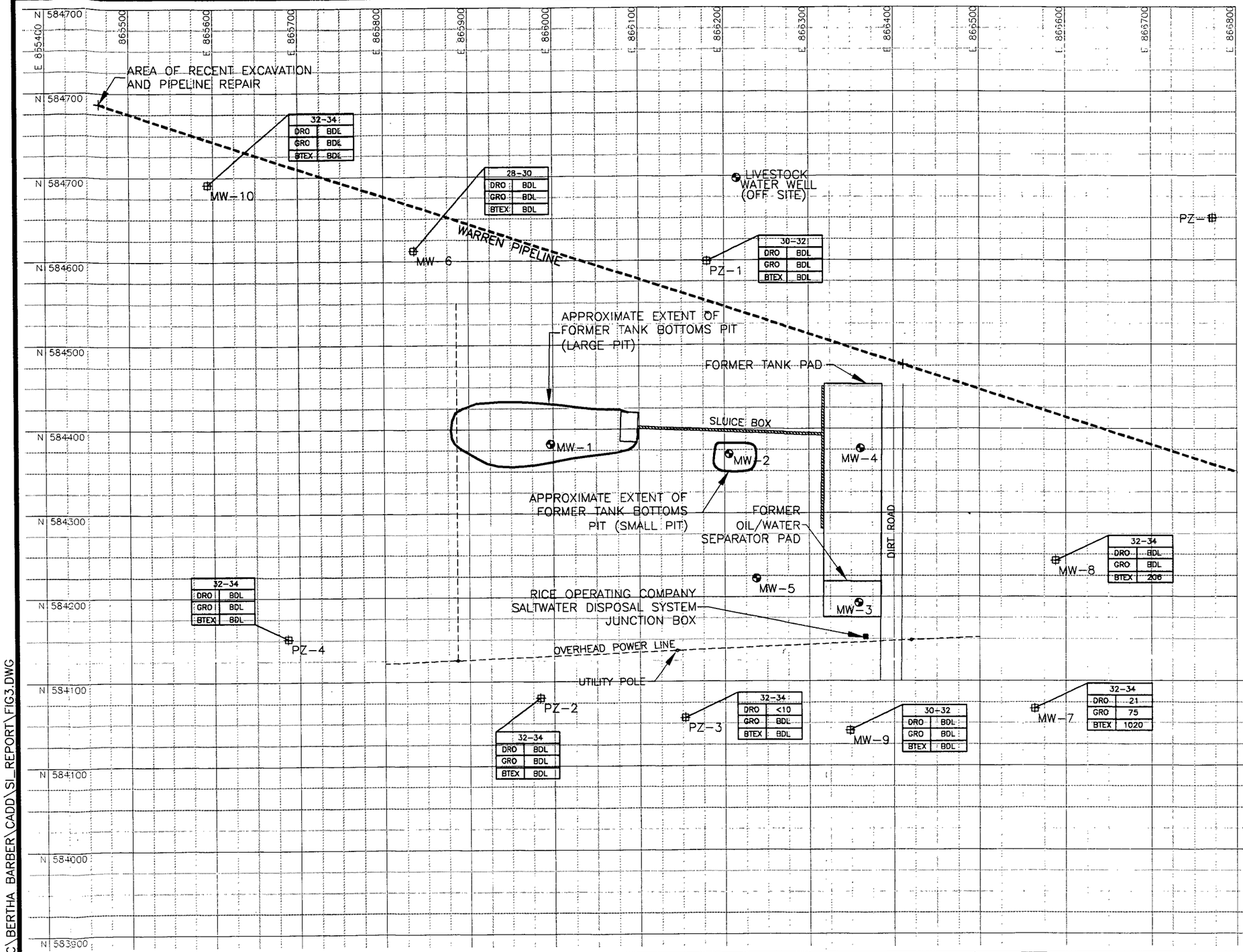

LEGEND:

MW-1 MONITORING WELL

MW-7 TEMPORARY BORING LOCATION

N 584500 E 865900 STATE PLANE COORDINATE SYSTEM, NORTH AMERICAN DATUM, 1983, NEW MEXICO EAST ZONE

25 FOOT GRID INTERVAL

32-34	
DRO	<10
GRO	<1
BTEX	BDL

- 32-34 — SAMPLE DEPTH IN FEET BELOW LAND SURFACE
- DRO — TOTAL PETROLEUM HYDROCARBONS (DIESEL RANGE ORGANICS)
- GRO — TOTAL PETROLEUM HYDROCARBONS (GASOLINE RANGE ORGANICS)
- BTEX — TOTAL BTEX CONCENTRATION

CONCENTRATION DATA REPORTED IN MILLIGRAMS PER KILOGRAM (mg/kg)

BDL – INDICATES RESULT BELOW DETECTION LIMIT

– INDICATES PARAMETER NOT ANALYZED

OCD REMEDIATION GUIDELINES	
TPH/DRO	100 mg/Kg
TPH/GRO	100 mg/Kg
BENZENE	10,000 mg/Kg
TOTAL BTEX	50,000 mg/Kg

mg/Kg MILLIGRMAS PER KILOGRAM

OCD NEW MEXICO ENERGY, MINERALS AND NATURAL RESOURCES DEPARTMENT, OIL CONSERVATION DIVISION

G:\APROJECT\MOC\BERTHA BARBER\CADD\SI_REPORT\FIG3.DWG

0 120 SCALE IN FEET

NO.	DATE	REVISION DESCRIPTION	BY	CKD

ARCADIS GERAGHTY & MILLER
3000 Cabot Blvd West
Suite 3004, Langhorne, Pa 19047
Tel: 215/752-6840 Fax: 215/752-6879

FORMER BERTHA BARBER TANK BATTERY
LEA COUNTY, NEW MEXICO

SOIL DELINEATION RESULTS

DRAWN	DATE	PROJECT MANAGER	DEPARTMENT MANAGER
M. WASILEWSKI	12/8/99	P. MIJONIS	D. SOUSA
		LEAD DESIGN PROF. M. HANSEN	CHECKED J. HORST
		PROJECT NUMBER NP000449.0002	DRAWING NUMBER 3

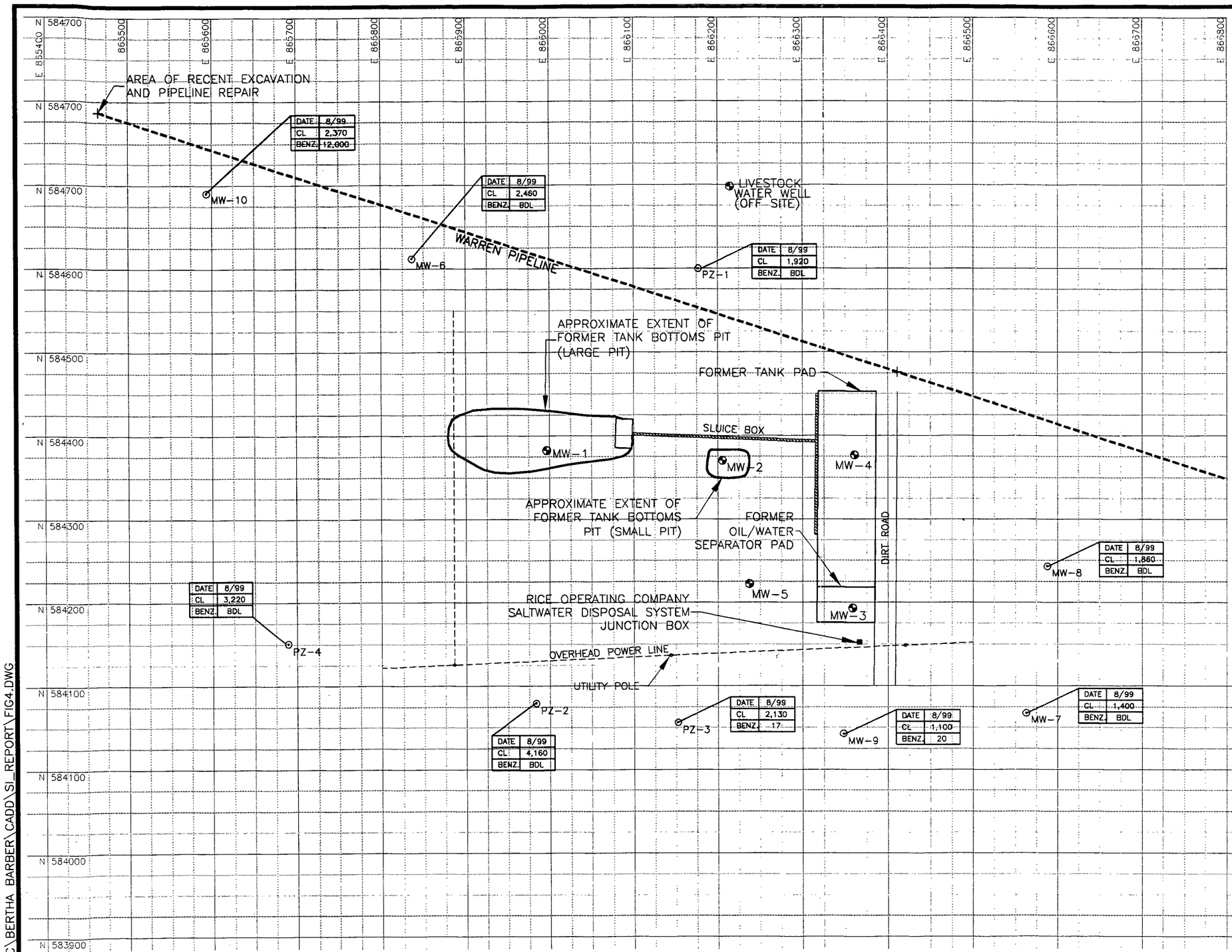

LEGEND:

MW-1 ⊕ MONITORING WELL

PZ-1 ⊙ TEMPORARY WELL

N 584500 E 865900 STATE PLANE COORDINATE SYSTEM, NORTH AMERICAN DATUM, 1983, NEW MEXICO EAST ZONE

25 FOOT GRID INTERVAL

DATE	8/99 — SAMPLE DATE
CL	1,860 — CHLORIDE CONCENTRATION IN MG/L
BENZ.	BDL — BENZENE CONCENTRATION IN UG/L

MG/L = MILLIGRAMS PER LITER

UG/L = MICROGRAMS PER LITER

BDL – INDICATES RESULT BELOW DETECTION LIMIT

– INDICATES PARAMETER NOT ANALYZED

WQCC STANDARDS	
CHLORIDE	250 mg/L
BENZENE	10 ug/L

WQCC NEW MEXICO WATER QUALITY CONTROL COMMISSION

ug/L MICROGRAMS PER LITER

G:\APROJECT\MOC\BERTHA BARBER\CADD\SI_REPORT\FIG4.DWG

0 120
SCALE IN FEET

NO.	DATE	REVISION DESCRIPTION	BY	CKD

ARCADIS GERAGHTY & MILLER
3000 Cabot Blvd West
Suite 3004, Langhorne, Pa 19047
Tel: 215/752-6840 Fax: 215/752-6879

FORMER BERTHA BARBER TANK BATTERY
LEA COUNTY, NEW MEXICO

GROUNDWATER DELINEATION RESULTS

DRAWN M. WASILEWSKI	DATE 12/8/99	PROJECT MANAGER P. MILIONIS	DEPARTMENT MANAGER D. SOUSA
		LEAD DESIGN PROF. M. HANSEN	CHECKED J. HORST
		PROJECT NUMBER NP000449.0002	DRAWING NUMBER 4

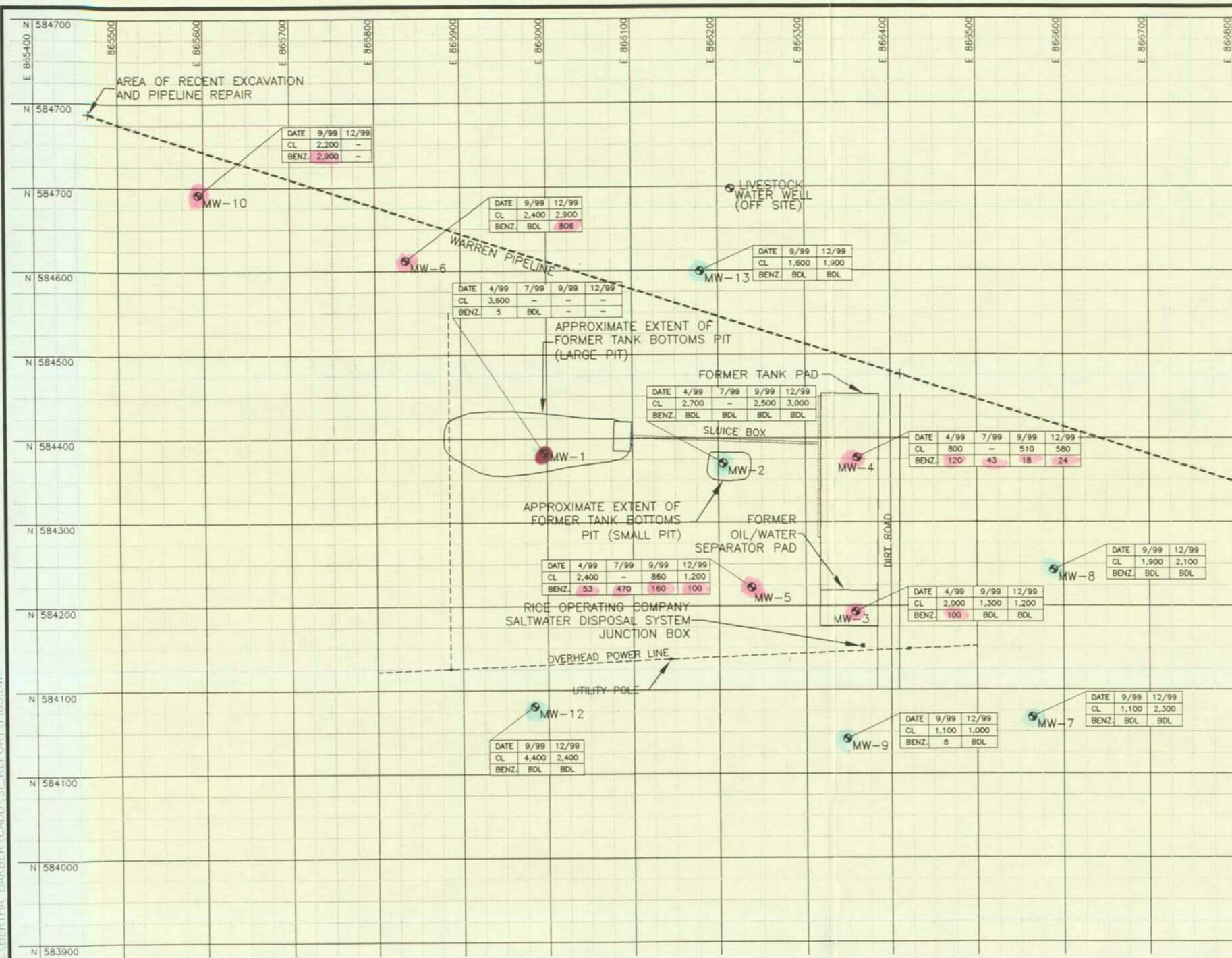

DATE	9/99	12/99
CL	2,200	–
BENZ.	2,900	–

DATE	9/99	12/99
CL	2,400	2,900
BENZ.	BDL	806

DATE	9/99	12/99
CL	1,600	1,900
BENZ.	BDL	BDL

DATE	4/99	7/99	9/99	12/99
CL	3,600	–	–	–
BENZ.	5	BDL	–	–

DATE	4/99	7/99	9/99	12/99
CL	2,700	–	2,500	3,000
BENZ.	BDL	BDL	BDL	BDL

DATE	4/99	7/99	9/99	12/99
CL	800	–	510	580
BENZ.	120	43	18	24

DATE	9/99	12/99
CL	1,900	2,100
BENZ.	BDL	BDL

DATE	4/99	7/99	9/99	12/99
CL	2,400	–	860	1,200
BENZ.	53	470	160	100

DATE	4/99	9/99	12/99
CL	2,000	1,300	1,200
BENZ.	100	BDL	BDL

DATE	9/99	12/99
CL	4,400	2,400
BENZ.	BDL	BDL

DATE	9/99	12/99
CL	1,100	1,000
BENZ.	8	BDL

DATE	9/99	12/99
CL	1,100	2,300
BENZ.	BDL	BDL

DATE	9/99	12/99
CL	1,100	1,500
BENZ.	BDL	BDL

LEGEND:

MW-1 — MONITORING WELL

N 584500 E 865900 — STATE PLANE COORDINATE SYSTEM, NORTH AMERICAN DATUM, 1983, NEW MEXICO EAST ZONE

25 FOOT GRID INTERVAL

DATE	9/99	— SAMPLE DATE
CL	1,860	— CHLORIDE CONCENTRATION IN mg/L
BENZ.	BDL	— BENZENE CONCENTRATION IN mg/L

BDL INDICATES RESULT BELOW DETECTION LIMIT

– INDICATES PARAMETER NOT ANALYZED

ug/L MICROGRAMS PER LITER

mg/L MILLAGRAMS PER LITER

WQCC STANDARDS	
CHLORIDE	250 mg/L
BENZENE	10 ug/L

WQCC NEW MEXICO WATER QUALITY CONTROL COMMISSION

0 120
SCALE IN FEET

NO.	DATE	REVISION DESCRIPTION	BY / CKD

ARCADIS GERAGHTY & MILLER
3000 Cabot Blvd West
Suite 3004, Langhorne, Pa 19047
Tel: 215/752-6840 Fax: 215/752-6879

FORMER BERTHA BARBER TANK BATTERY
LEA COUNTY, NEW MEXICO

DRAWN M. WASILEWSKI	DATE 12/8/99	PROJECT MANAGER P. MILIONIS	DEPARTMENT MANAGER D. SOUSA
DISTRIBUTION OF BTEX AND CHLORIDE IN GROUNDWATER, 1999 QUARTERLY MONITORING EVENTS		LEAD DESIGN PROF. M. HANSEN	CHECKED J. HORST
		PROJECT NUMBER NP000449.0002	DRAWING NUMBER 5

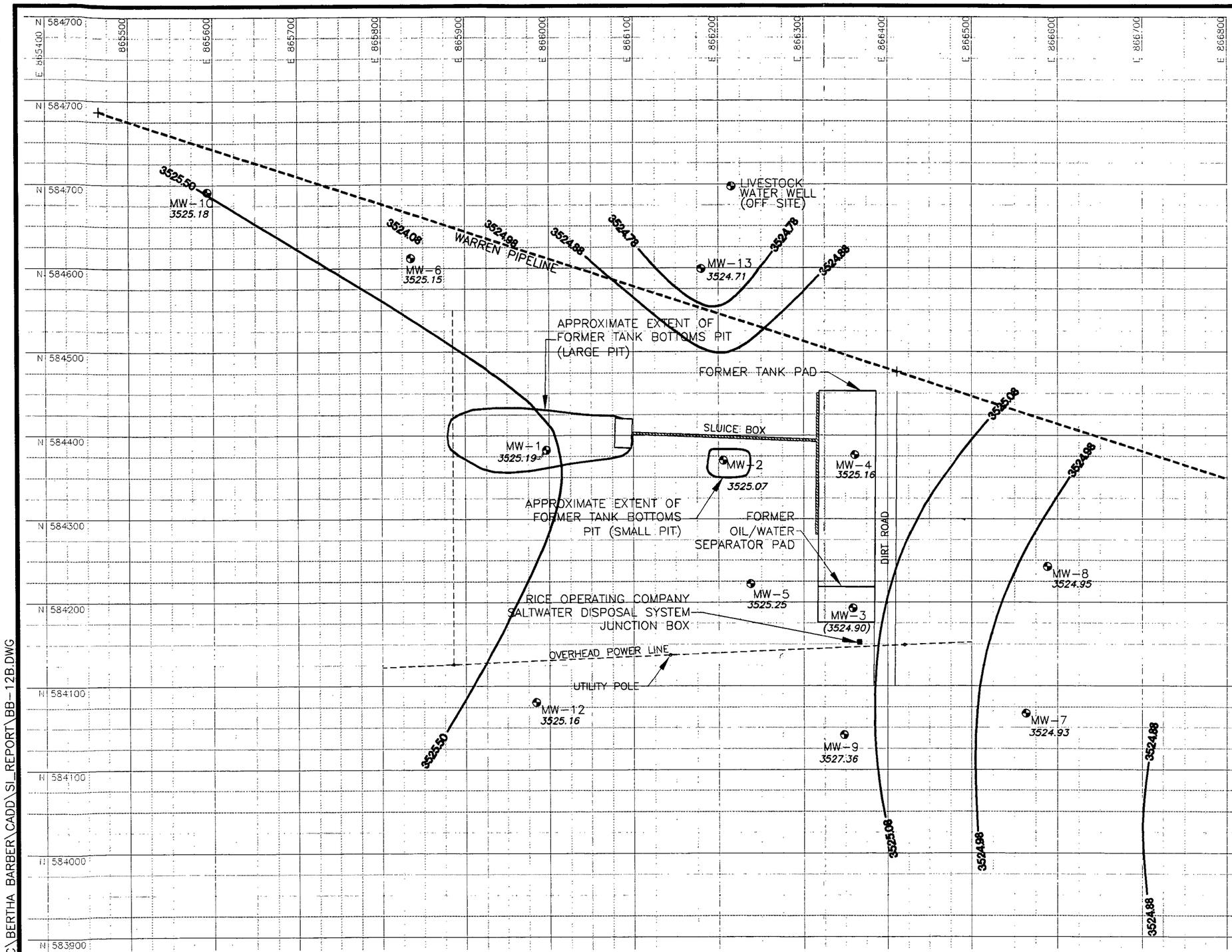

LEGEND:

MW-1 ⊕	EXISTING MONITORING WELL
PZ-1 ⊙	TEMPORARY WELL
	STATE PLANE COORDINATE SYSTEM, NORTH AMERICAN DATUM, 1983, NEW MEXICO EAST ZONE
(3525.90)	WATER LEVEL ELEVATION TO COMMON DATUM (SEPTEMBER, 1999)
———	GROUNDWATER ELEVATION CONTOUR
3525.18	GROUNDWATER ELEVATION IN FEET ABOVE MEAN SEA LEVEL, 0.10 FOOT INTERVALS.

0 120
SCALE IN FEET

NO.	DATE	REVISION DESCRIPTION	BY / CKD

ARCADIS GERAGHTY & MILLER
3000 Cabot Blvd West
Suite 3004, Langhorne, Pa 19047
Tel: 215/752-6840 Fax: 215/752-6879

FORMER BERTHA BARBER TANK BATTERY
LEA COUNTY, NEW MEXICO

GROUNDWATER ELEVATION CONTOURS DECEMBER, 1999

DRAWN	DATE	PROJECT MANAGER	DEPARTMENT MANAGER
M. WASILEWSKI	12/8/99	P. MILIONIS	D. SOUSA
		LEAD DESIGN PROF. M. HANSEN	CHECKED J. HORST
		PROJECT NUMBER NP000449.0002	DRAWING NUMBER 6

G:\APROJECT\MOC\BERTHA BARBER\CADD\SI_REPORT\BB-12B.DWG

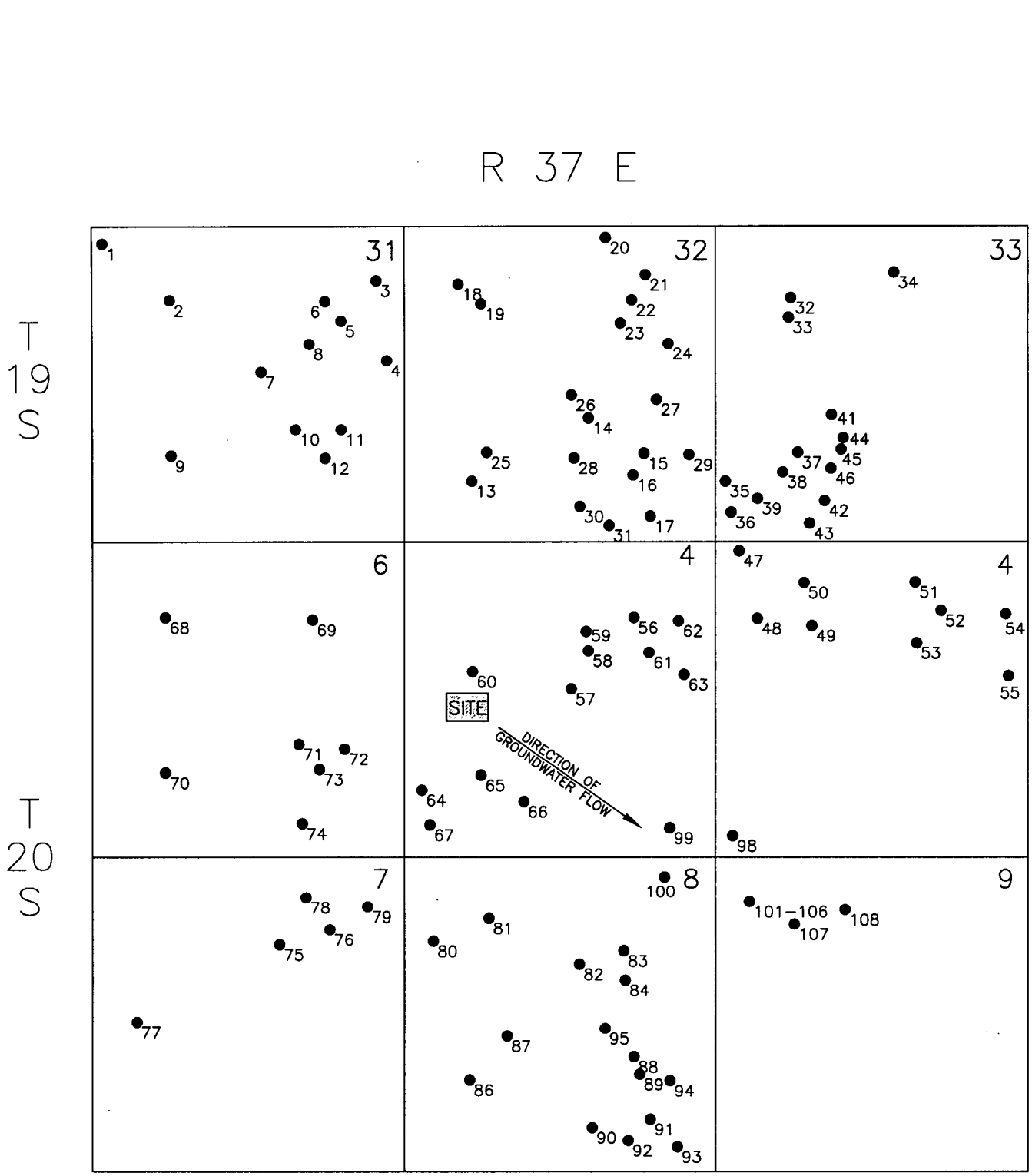

NOTE: FIGURE FOR ORIENTATIONAL PURPOSES ONLY. – NOT PRECISE

0 2500
SCALE IN FEET

G:\APROJECT\MARATHON\BERTHA BARBER\CADD\SI_REPORT\FIG9.DWG

ARCADIS GERAGHTY & MILLER

DRAWN M. WASILEWSKI	DATE 12/8/99	PROJECT MANAGER P. MILIONIS	DEPARTMENT MANAGER D. SOUSA
WATER WELLS WITHIN ONE-MILE RADIUS FORMER BERTHA BARBER TANK BATTERY LEA COUNTY, NEW MEXICO		LEAD DESIGN PROF. M. HANSEN	CHECKED J. HORST
		PROJECT NUMBER NP000449.0002	DRAWING NUMBER 7

Appendix A

Boring Logs

ARCADIS GERAGHTY & MILLER

BORING LOG

Date:	8/5/99	By:	DM
Client:	Marathon Oil Company	Site:	Former Bertha Barber Tank Battery
Boring No.	PZ-1	Driller:	Rhino

Depth (ft bls)	PID (ppm)	Moisture	Description
2	0	Dry	Very fine grained red-yellow sand.
4	0	Dry	
6	0	Dry	Pink, sandy caliche with some silt.
8	0	Dry	
10	0	Dry	Pink, sandy caliche.
12	0	Dry	
14	0	Dry	
16	0	Dry	Very hard, sandy caliche.
18	0	Dry	
20	0	Dry	Very hard, sandy caliche.
22	0	Dry	
24	0	Dry	
26	0	Dry	Caliche.
28	0	Dry	
30	0	Dry	Caliche with siliceous limestone and sand.
32	0	Wet	

Total depth =

BORING LOG

Date:	8/5/99	By:	DM
Client:	Marathon Oil Company	Site:	Former Bertha Barber Tank Battery
Boring No.	PZ-2	Driller:	Rhino

Depth (ft bls)	PID (ppm)	Moisture	Description
2	0	Dry	Red-yellow sand. Loose.
4	0	Dry	
6	0	Dry	Light pink, sandy caliche. Very chalky.
8	0	Dry	
10	0	Dry	Red sand, very fine grain. Loose, rounded to subrounded. Some caliche.
12	0	Dry	
14	0	Dry	
16	0	Dry	
18	0	Dry	Light pink, sandy caliche with red sand interbedded.
20	0	Dry	
22	0	Dry	Light pink sandstone.
24	0	Dry	Sandy caliche.
26	0	Dry	Light pink, sandy caliche with red sand.
28	0	Dry	
30	0	Dry	
32	0	Dry	
34	0	Wet	Very hard caliche and pale brown dolomite.

Total depth = 50 feet

BORING LOG

Date:	8/6/99	By:	DM
Client:	Marathon Oil Company	Site:	Former Bertha Barber Tank Battery
Boring No.	PZ-3	Driller:	Rhino

Depth (ft bls)	PID (ppm)	Moisture	Description
2	0	Dry	Loose, very fine to fine grained red-yellow sand.
4	0	Dry	Very sandy light pink caliche.
6	0	Dry	Loose, very fine grained pale brown sand. Subrounded.
8	0	Dry	
10	0	Dry	Loose, very fine grained pale brown sand. Some caliche.
12	0	Dry	
14	0	Dry	
16		Dry	
18		Dry	Light pink caliche with interbedded red sand.
20		Dry	
22		Dry	
24		Dry	Caliche with sand.
26		Dry	
28		Dry	Caliche with sand.

BORING LOG

Date:	8/6/99	By:	DM
Client:	Marathon Oil Company	Site:	Former Bertha Barber Tank Battery
Boring No.	PZ-4	Driller:	Rhino

Depth (ft bls)	PID (ppm)	Moisture	Description
2	0	Dry	Loose, very fine grained red-yellow sand.
4	0	Dry	Very sandy, light pink caliche.
6	0	Dry	
8	0	Dry	Loose, very fine grained pale brown sand. Some caliche.
10	0	Dry	
12	0	Dry	
14	0	Dry	
16	0	Dry	Sandy caliche.
18	0	Dry	
20	0	Dry	
22	0	Dry	Red-yellow silty sand. Some caliche.
24	0	Dry	
26	0	Dry	Red-yellow silty sand. Some caliche.
28	0	Dry	
30	0	Dry	
32	0	Dry	
34	0	Wet	

BORING LOG

Date:	8/3/99	By:	DM
Client:	Marathon Oil Company	Site:	Former Bertha Barber Tank Battery
Boring No.	MW-6	Driller:	Rhino

Depth (ft bls)	PID (ppm)	Moisture	Description
2	0	Damp	Loose, very fine grained red-gray sand.
4	0	Dry	Pale brown sand, trce of caliche.
6	0	Dry	Soft, buff colored caliche. Very sandy.
8	0	Dry	Loose, very fine grained pale brown sand. Some caliche.
10	0	Dry	
12	0	Dry	Light pink sandy caliche.
14	0	Dry	Very hard, sandy caliche.
16	0	Dry	
18	0	Dry	
20	0	Dry	
22	0	Dry	
24	0	Dry	Very fine grained yellow-red sand. Silty, slight plastic.
26	0	Damp	Pink, silty, sandy caliche. Slightly plastic. Limestone nodules.
28	0.3	Damp	
30	0.3	Damp	Pink, silty, sandy caliche. Slightly plastic. Limestone nodules. Moderately to highly plastic.
32	0.2	Damp	
34	0.5	Wet	Trace gravel.
36	0	Wet	Pink, silty, sandy caliche. Slightly plastic. Limestone nodules. Moderately to highly plastic.

Total depth - 50 feet

BORING LOG

Date:	8/3/99	By:	DM
Client:	Marathon Oil Company	Site:	Former Bertha Barber Tank Battery
Boring No.	MW-7	Driller:	Rhino

Depth (ft bls)	PID (ppm)	Moisture	Description
2	0	Dry	Red-brown sand.
4	0	Dry	Very sandy pinkish-white caliche.
6	0	Dry	Very sandy pinkish-white caliche.
8	0	Dry	
10	0	Dry	Caliche.
12	0	Dry	
14	0	Dry	Caliche.
16	0	Dry	
18	0	Dry	Loose, very fine grained red-yellow sand.
20	0	Dry	
22	0	Dry	Pink sand with caliche.
24	0	Dry	
26	0	Dry	
28	11.6	Dry	Sandy caliche with trace gravel. Gray to dark-gray stain. Odor.
30	4.3	Dry	
32	26	Damp	
34	8600	Damp	
36		Wet	

Total Depth = 50 feet

BORING LOG

Date:	8/4/99	By:	DM
Client:	Marathon Oil Company	Site:	Former Bertha Barber Tank Battery
Boring No.	MW-8	Driller:	Rhino

Depth (ft bls)	PID (ppm)	Moisture	Description
2	0	Dry	Loose, very fine to fine grained light brown sand.
4	0	Dry	Pale yellow sandy, silty caliche.
6	0	Dry	Loose, very fine grained pale brown sand. Some caliche.
8	0	Dry	
10	0	Damp	Loose, very fine grained yellow sand. Some caliche.
12	0	Dry	
14	0	Dry	Loose, very fine grained yellow sand. Some caliche.
16		Dry	Loose, very fine grained yellow sand. Some caliche.
18		Dry	
20	0.2	Damp	Loose, very fine grained brown sand.
22		Dry	
24		Dry	Pale brown sandy caliche.
26	0.5	Dry	Pale brown sandy caliche.
28	1.4	Dry	Pale brown sandy caliche. Some limestone nodules.
30	3	Dry	
32		Damp	
34	135	Wet	Dark gray staining, odor.

Total depth = 50 feet

BORING LOG

Date:	8/4/99	By:	DM
Client:	Marathon Oil Company	Site:	Former Bertha Barber Tank Battery
Boring No.	MW-9	Driller:	Rhino

Depth (ft bls)	PID (ppm)	Moisture	Description
2	0	Dry	Loose, yellow-red sand.
4	0	Dry	Pale yellow sand with caliche.
6	0	Dry	Loose, very fine grained pinkish-white sand with some silt.
8	0	Dry	
10	0	Dry	
12	0	Dry	Pinkish white sand with caliche.
14	0	Dry	
16	0	Dry	Very fine grained yellow-red sand with chalky caliche.
18	0	Dry	Very fine grained yellow-red sand with chalky caliche.
20	0	Dry	Very hard caliche with sand lenses.
22	0	Dry	
24	0	Dry	
26	0	Dry	Pale yellow sandy, silty caliche with siliceous limestone and sand layers.
28	0	Damp	
30	0	Damp	Loose, slightly plastic, very fine grained yellow-red sand.
32	0	Damp	
34	0	Wet	

Total depth = 43 feet

BORING LOG

Date:	8/5/99	By:	DM
Client:	Marathon Oil Company	Site:	Former Bertha Barber Tank Battery
Boring No.	MW-10	Driller:	Rhino

Depth (ft bls)	PID (ppm)	Moisture	Description
2	0	Dry	Loose, very fine grained red-yellow sand.
4	0	Dry	Very sandy pinkish-white caliche.
6	0	Dry	
8	0	Dry	Pink caliche with red-yellow sands interbedded.
10	0	Dry	
12	0	Dry	Pink caliche with red-yellow sands interbedded.
14	0	Dry	
16	0	Dry	Loose, very fine grained red-yellow sand with some caliche.
18	0	Dry	
20	1.5	Dry	
22	1.6	Dry	Pale brown sandy caliche.
24	12.1	Dry	
26	24	Dry	
28	150	Dry	Pale brown sand with caliche. Odor.
30	32	Dry	
32	28	Damp	Pink sand with caliche. Odor.
34	370	Wet	

Total depth =

BORING LOG

Date:	8/6/99	By:	DM
Client:	Marathon Oil Company	Site:	Former Bertha Barber Tank Battery
Boring No.	MW-11		

Depth (ft bls)	PID (ppm)	Moisture	Description
2	0	Dry	Loose, very fine grained red-brown sand.
4	0	Dry	
6	0	Dry	Loose, very fine grained red-yellow sand.
8	0	Dry	
10	0	Dry	Loose, very fine grained red-yellow sand.
12	0	Dry	
14	0	Dry	Pink-gray sand with caliche.
16	0	Dry	
18	0	Damp	Sandy caliche.
20	0	Damp	
22	0	Damp	Pink-gray sandy caliche.
24	0	Dry	Loose, very fine grained red-yellow sand. Some caliche.
26	0	Dry	
28	0	Dry	
30	0	Dry	
32	0	Dry	
34	0	Wet	Pinkish-white calich with some sand.

Appendix B

Soil Delineation Laboratory Analytical Report

CORE LABORATORIES

ANALYTICAL REPORT

JOB NUMBER: 908924

Prepared For:

Marathon Oil Company
125 West Missouri Street
P.O. Box 552
Midland, TX 79702-0552

Attention: Mr. Paul Peacock

Date: 08/18/99

Les Arnold
Signature

8/18/99
Date

Name: Les Arnold

Title: Laboratory Manager

2400 Cumberland Drive
Valparaiso, IN 46383

PHONE: 219-464-2389
FAX..: 219-462-2953

CORE LABORATORIES

SAMPLE INFORMATION
Date: 08/18/99

Job Number.: 908924
Customer...: Marathon Oil Company
Attn.....: Mr. Paul Peacock

Project Number.....: 96000703
Customer Project ID....:
Project Description....: MOC - Bertha Barber

Laboratory Sample ID	Customer Sample ID	Sample Matrix	Date Sampled	Time Sampled	Date Received	Time Received
908924-1	MW-6 (28-30)	Solid	08/03/1999	13:15	08/10/1999	12:00
908924-2	MW-7 (32-34)	Solid	08/03/1999	17:40	08/10/1999	12:00
908924-3	MW-8 (32-34)	Solid	08/04/1999	13:50	08/10/1999	12:00
908924-4	MW-9 (30-32)	Solid	08/04/1999	15:30	08/10/1999	12:00
908924-5	MW-10 (32-34)	Solid	08/05/1999	10:00	08/10/1999	12:00
908924-6	MW-11 (28-30)	Solid	08/05/1999	18:45	08/10/1999	12:00
908924-7	TPZ (30-32)	Solid	08/05/1999	15:20	08/10/1999	12:00
908924-8	PZ-2 (32-34)	Solid	08/06/1999	11:00	08/10/1999	12:00
908924-9	PZ-3 (32-34)	Solid	08/06/1999	15:45	08/10/1999	12:00
908924-10	TRIP BLANK	Water			08/10/1999	12:03

CORELAB

CORE LABORATORIES

LABORATORY TEST RESULTS

Job Number: 908924

Date: 08/18/99

CUSTOMER: Maratnon Oil Company PROJECT: ATTN: Mr. Paul Peacock

Customer Sample ID: MW-6 (28-30)
Date Sampled.....: 08/03/1999
Time Sampled.....: 13:15
Sample Matrix.....: Solid

Laboratory Sample ID: 908924-1
Date Received.....: 08/10/1999
Time Received.....: 12:00

TEST METHOD	PARAMETER/TEST DESCRIPTION	SAMPLE RESULT	REPORTING LIMIT	UNITS	DATE	TECH
EPA 8015B	Diesal Range Organics (GC/FID)					
	Diesel Range Organics, Solid	ND	10.0	mg/Kg	08/13/99	jdb
EPA 8021B	BTEX					
	Benzene, Solid	ND	5.0	ug/Kg	08/16/99	weh
	Ethylbenzene, Solid	ND	5.0	ug/Kg	08/16/99	weh
	Toluene, Solid	ND	5.0	ug/Kg	08/16/99	weh
	m&p-Xylenes, Solid	ND	10.0	ug/Kg	08/16/99	weh
	o-Xylene, Solid	ND	5.0	ug/Kg	08/16/99	weh
EPA 8015B	Gasoline Range Organics (GC/FID)					
	Gasoline Range Organics, Solid	<1.0	1.0	mg/Kg	08/11/99	rjm

CORE LABORATORIES

LABORATORY TEST RESULTS

Job Number: 908924

Date: 08/18/99

CUSTOMER: Marathon Oil Company PROJECT: ATTN: Mr. Paul Peacock

Customer Sample ID: MW-7 (32-34)
Date Sampled.....: 08/03/1999
Time Sampled.....: 17:40
Sample Matrix.....: Solid

Laboratory Sample ID: 908924-2
Date Received.....: 08/10/1999
Time Received.....: 12:00

TEST METHOD	PARAMETER/TEST DESCRIPTION	SAMPLE RESULT	REPORTING LIMIT	UNITS	DATE	TECH
EPA 8015B	Diesal Range Organics (GC/FID)					
	Diesel Range Organics, Solid	21	10.0	mg/Kg	08/13/99	jdb
EPA 8021B	BTEX					
	Benzene, Solid	ND	50	ug/Kg	08/16/99	weh
	Ethylbenzene, Solid	110	50	ug/Kg	08/16/99	weh
	Toluene, Solid	60	50	ug/Kg	08/16/99	weh
	m&p-Xylenes, Solid	500	100	ug/Kg	08/16/99	weh
	o-Xylene, Solid	350	50	ug/Kg	08/16/99	weh
EPA 8015B	Gasoline Range Organics (GC/FID)					
	Gasoline Range Organics, Solid	75	20	mg/Kg	08/13/99	weh

CORE LABORATORIES

LABORATORY TEST RESULTS

Job Number: 908924

Date: 08/18/99

CUSTOMER: Marathon Oil Company PROJECT: ATTN: Mr. Paul Peacock

Customer Sample ID: MW-8 (32-34)
Date Sampled.....: 08/04/1999
Time Sampled.....: 13:50
Sample Matrix.....: Solid

Laboratory Sample ID: 908924-3
Date Received.....: 08/10/1999
Time Received.....: 12:00

TEST METHOD	PARAMETER/TEST DESCRIPTION	SAMPLE RESULT	REPORTING LIMIT	UNITS	DATE	TECH
EPA 8015B	Diesal Range Organics (GC/FID)					
	Diesel Range Organics, Solid	ND	10.0	mg/Kg	08/13/99	jdb
EPA 8021B	BTEX					
	Benzene, Solid	ND	5.0	ug/Kg	08/16/99	weh
	Ethylbenzene, Solid	16	5.0	ug/Kg	08/16/99	weh
	Toluene, Solid	85	5.0	ug/Kg	08/16/99	weh
	m&p-Xylenes, Solid	66	10.0	ug/Kg	08/16/99	weh
	o-Xylene, Solid	39	5.0	ug/Kg	08/16/99	weh
EPA 8015B	Gasoline Range Organics (GC/FID)					
	Gasoline Range Organics, Solid	<1.0	1.0	mg/Kg	08/11/99	rjm

CORE LABORATORIES

LABORATORY TEST RESULTS

Job Number: 908924

Date: 08/18/99

CUSTOMER: Marathon Oil Company PROJECT: ATTN: Mr. Paul Peacock

Customer Sample ID: MW-9 (30-32)
Date Sampled.....: 08/04/1999
Time Sampled.....: 15:30
Sample Matrix.....: Solid

Laboratory Sample ID: 908924-4
Date Received.....: 08/10/1999
Time Received.....: 12:00

TEST METHOD	PARAMETER/TEST DESCRIPTION	SAMPLE RESULT	REPORTING LIMIT	UNITS	DATE	TECH
EPA 8015B	Diesal Range Organics (GC/FID)					
	Diesel Range Organics, Solid	ND	10.0	mg/Kg	08/13/99	jdb
EPA 8021B	BTEX					
	Benzene, Solid	ND	5.0	ug/Kg	08/16/99	weh
	Ethylbenzene, Solid	ND	5.0	ug/Kg	08/16/99	weh
	Toluene, Solid	ND	5.0	ug/Kg	08/16/99	weh
	m&p-Xylenes, Solid	ND	10.0	ug/Kg	08/16/99	weh
	o-Xylene, Solid	ND	5.0	ug/Kg	08/16/99	weh
EPA 8015B	Gasoline Range Organics (GC/FID)					
	Gasoline Range Organics, Solid	<1.0	1.0	mg/Kg	08/11/99	rjm

CORE LABORATORIES

LABORATORY TEST RESULTS

Job Number: 908924 Date: 08/18/99

CUSTOMER: Marathon Oil Company PROJECT: ATTN: Mr. Paul Peacock

Customer Sample ID: MW-10 (32-34)
Date Sampled.....: 08/05/1999
Time Sampled.....: 10:00
Sample Matrix.....: Solid

Laboratory Sample ID: 908924-5
Date Received.....: 08/10/1999
Time Received.....: 12:00

TEST METHOD	PARAMETER/TEST DESCRIPTION	SAMPLE RESULT	REPORTING LIMIT	UNITS	DATE	TECH
EPA 8015B	Diesal Range Organics (GC/FID)					
	Diesel Range Organics, Solid	ND	10.0	mg/Kg	08/13/99	jdb
EPA 8021B	BTEX					
	Benzene, Solid	ND	5.0	ug/Kg	08/16/99	weh
	Ethylbenzene, Solid	ND	5.0	ug/Kg	08/16/99	weh
	Toluene, Solid	ND	5.0	ug/Kg	08/16/99	weh
	m&p-Xylenes, Solid	ND	10.0	ug/Kg	08/16/99	weh
	o-Xylene, Solid	ND	5.0	ug/Kg	08/16/99	weh
EPA 8015B	Gasoline Range Organics (GC/FID)					
	Gasoline Range Organics, Solid	<1.0	1.0	mg/Kg	08/11/99	rjm

CORE LABORATORIES

LABORATORY TEST RESULTS

Job Number: 908924

Date: 08/18/99

CUSTOMER: Marathon Oil Company PROJECT: ATTN: Mr. Paul Peacock

Customer Sample ID: MW-11 (28-30)
Date Sampled.....: 08/05/1999
Time Sampled.....: 18:45
Sample Matrix.....: Solid

Laboratory Sample ID: 908924-6
Date Received.....: 08/10/1999
Time Received.....: 12:00

TEST METHOD	PARAMETER/TEST DESCRIPTION	SAMPLE RESULT	REPORTING LIMIT	UNITS	DATE	TECH
EPA 8015B	Diesal Range Organics (GC/FID)					
	Diesel Range Organics, Solid	ND	10.0	mg/Kg	08/13/99	jdb
EPA 8021B	BTEX					
	Benzene, Solid	ND	5.0	ug/Kg	08/16/99	weh
	Ethylbenzene, Solid	ND	5.0	ug/Kg	08/16/99	weh
	Toluene, Solid	ND	5.0	ug/Kg	08/16/99	weh
	m&p-Xylenes, Solid	ND	10.0	ug/Kg	08/16/99	weh
	o-Xylene, Solid	ND	5.0	ug/Kg	08/16/99	weh
EPA 8015B	Gasoline Range Organics (GC/FID)					
	Gasoline Range Organics, Solid	ND	1.0	mg/Kg	08/11/99	rjm

CORE LABORATORIES

LABORATORY TEST RESULTS

Job Number: 908924 Date: 08/18/99

CUSTOMER: Marathon Oil Company PROJECT: ATTN: Mr. Paul Peacock

Customer Sample ID: TPZ (30-32)
Date Sampled.....: 08/05/1999
Time Sampled.....: 15:20
Sample Matrix.....: Solid

Laboratory Sample ID: 908924-7
Date Received.....: 08/10/1999
Time Received.....: 12:00

TEST METHOD	PARAMETER/TEST DESCRIPTION	SAMPLE RESULT	REPORTING LIMIT	UNITS	DATE	TECH
EPA 8015B	Diesal Range Organics (GC/FID)					
	Diesel Range Organics, Solid	ND	10.0	mg/Kg	08/13/99	jdb
EPA 8021B	BTEX					
	Benzene, Solid	ND	5.0	ug/Kg	08/16/99	weh
	Ethylbenzene, Solid	ND	5.0	ug/Kg	08/16/99	weh
	Toluene, Solid	ND	5.0	ug/Kg	08/16/99	weh
	m&p-Xylenes, Solid	ND	10.0	ug/Kg	08/16/99	weh
	o-Xylene, Solid	ND	5.0	ug/Kg	08/16/99	weh
EPA 8015B	Gasoline Range Organics (GC/FID)					
	Gasoline Range Organics, Solid	<1.0	1.0	mg/Kg	08/11/99	rjm

CORE LABORATORIES

LABORATORY TEST RESULTS

Job Number: 908924

Date: 08/18/99

CUSTOMER: Marathon Oil Company PROJECT: ATTN: Mr. Paul Peacock

Customer Sample ID: PZ-2 (32-34)
Date Sampled.....: 08/06/1999
Time Sampled.....: 11:00
Sample Matrix.....: Solid

Laboratory Sample ID: 908924-8
Date Received.....: 08/10/1999
Time Received.....: 12:00

TEST METHOD	PARAMETER/TEST DESCRIPTION	SAMPLE RESULT	REPORTING LIMIT	UNITS	DATE	TECH
EPA 8015B	Diesal Range Organics (GC/FID)					
	Diesel Range Organics, Solid	ND	10.0	mg/Kg	08/13/99	jdb
EPA 8021B	BTEX					
	Benzene, Solid	ND	5.0	ug/Kg	08/16/99	weh
	Ethylbenzene, Solid	ND	5.0	ug/Kg	08/16/99	weh
	Toluene, Solid	ND	5.0	ug/Kg	08/16/99	weh
	m&p-Xylenes, Solid	ND	10.0	ug/Kg	08/16/99	weh
	o-Xylene, Solid	ND	5.0	ug/Kg	08/16/99	weh
EPA 8015B	Gasoline Range Organics (GC/FID)					
	Gasoline Range Organics, Solid	<1.0	1.0	mg/Kg	08/11/99	rjm

CORE LABORATORIES

LABORATORY TEST RESULTS

Job Number: 908924

Date: 08/18/99

CUSTOMER: Marathon Oil Company PROJECT: ATTN: Mr. Paul Peacock

Customer Sample ID: PZ-3 (32-34)
Date Sampled.....: 08/06/1999
Time Sampled.....: 15:45
Sample Matrix.....: Solid

Laboratory Sample ID: 908924-9
Date Received.....: 08/10/1999
Time Received.....: 12:00

TEST METHOD	PARAMETER/TEST DESCRIPTION	SAMPLE RESULT	REPORTING LIMIT	UNITS	DATE	TECH
EPA 8015B	Diesal Range Organics (GC/FID)					
	Diesel Range Organics, Solid	ND	10.0	mg/Kg	08/13/99	jdb
EPA 8021B	BTEX					
	Benzene, Solid	ND	5.0	ug/Kg	08/16/99	weh
	Ethylbenzene, Solid	ND	5.0	ug/Kg	08/16/99	weh
	Toluene, Solid	ND	5.0	ug/Kg	08/16/99	weh
	m&p-Xylenes, Solid	ND	10.0	ug/Kg	08/16/99	weh
	o-Xylene, Solid	ND	5.0	ug/Kg	08/16/99	weh
EPA 8015B	Gasoline Range Organics (GC/FID)					
	Gasoline Range Organics, Solid	<1.0	1.0	mg/Kg	08/11/99	rjm

CORE LABORATORIES

LABORATORY TEST RESULTS

Job Number: 908924

Date: 08/18/99

CUSTOMER: Marathon Oil Company PROJECT: ATTN: Mr. Paul Peacock

Customer Sample ID: TRIP BLANK
Date Sampled.....:
Time Sampled.....:
Sample Matrix.....: Water

Laboratory Sample ID: 908924-10
Date Received.....: 08/10/1999
Time Received.....: 12:03

TEST METHOD	PARAMETER/TEST DESCRIPTION	SAMPLE RESULT	REPORTING LIMIT	UNITS	DATE	TECH
EPA 8021B	BTEX					
	Benzene	ND	5.0	ug/L	08/17/99	weh
	Ethylbenzene	ND	5.0	ug/L	08/17/99	weh
	Toluene	ND	5.0	ug/L	08/17/99	weh
	m&p-Xylenes	ND	10.0	ug/L	08/17/99	weh
	o-Xylene	ND	5.0	ug/L	08/17/99	weh

CORE LABORATORIES

QUALITY CONTROL RESULTS

Job Number.: 908924 | Report Date.: 08/18/99

CUSTOMER: Marathon Oil Company | PROJECT: MOC - Bertha Barber | ATTN: Mr. Paul Peacock

QC Type	Description	Reag. Code	Lab ID	Dilution Factor	Date	Time

Test Method.....: EPA 8015B | Batch.....: 44859 | Analyst...: jdb
Method Description.: Diesal Range Organics (GC/FID) | Units.....: mg/L

MB	Method Blank				08/13/1999	1257

Parameter/Test Description	QC Result	QC Result	True Value	Orig. Value	Calc. Result	*	Limits
Diesel Range Organics	ND						

LCS	Laboratory Control Sample	DROSTD			08/13/1999	1335

Parameter/Test Description	QC Result	QC Result	True Value	Orig. Value	Calc. Result	*	Limits
Diesel Range Organics	438.51		500		87.7	%	55-131

MS	Matrix Spike	DROSTD	908924-1		08/13/1999	1449

Parameter/Test Description	QC Result	QC Result	True Value	Orig. Value	Calc. Result	*	Limits
Diesel Range Organics	463.55		500	ND	92.7	%	55-131

MSD	Matrix Spike Duplicate	DROSTD	908924-1		08/13/1999	1526

Parameter/Test Description	QC Result	QC Result	True Value	Orig. Value	Calc. Result	*	Limits
Diesel Range Organics	508.12	463.55	500	ND	101.6	%	55-131
					9.2	R	20

Test Method.....: EPA 8021B | Batch.....: 44913 | Analyst...: weh
Method Description.: BTEX | Units.....: ug/L

LCS	Laboratory Control Sample	8020MS1			08/16/1999	0913

Parameter/Test Description	QC Result	QC Result	True Value	Orig. Value	Calc. Result	*	Limits
Benzene	46.963		50		93.9	%	70-130
Ethylbenzene	48.41		50		96.8	%	70-130
Toluene	47.20		50		94.4	%	70-130
m&p-Xylenes	97.89		100		97.9	%	70-130
o-Xylene	48.32		50		96.6	%	70-130

MB	Method Blank				08/16/1999	1004

Parameter/Test Description	QC Result	QC Result	True Value	Orig. Value	Calc. Result	*	Limits
Benzene	ND						
Ethylbenzene	ND						
Toluene	ND						
m&p-Xylenes	ND						
o-Xylene	ND						

* %=% REC, R=RPD, A=ABS Diff., D=% Diff.

CORE LABORATORIES

QUALITY CONTROL RESULTS

Job Number.: 908924

Report Date.: 08/18/99

CUSTOMER: Marathon Oil Company | PROJECT: MOC - Bertha Barber | ATTN: Mr. Paul Peacock

QC Type	Description	Reag. Code	Lab ID	Dilution Factor	Date	Time
MS	Matrix Spike	8020MS1	908924-1		08/16/1999	1321

Parameter/Test Description	QC Result	QC Result	True Value	Orig. Value	Calc. Result	*	Limits
Benzene	39.274		50	ND	78.5	%	70-119
Ethylbenzene	40.71		50	ND	81.4	%	81-112
Toluene	39.14		50	ND	78.3	%	78-109
m&p-Xylenes	81.26		100	ND	81.3	%	79-113
o-Xylene	39.49		50	ND	79.0	%	77-114

MSD	Matrix Spike Duplicate	8020MS1	908924-1		08/16/1999	1357

Parameter/Test Description	QC Result	QC Result	True Value	Orig. Value	Calc. Result	*	Limits
Benzene	40.885	39.274	50	ND	81.8	%	70-119
					4.0	R	25
Ethylbenzene	41.19	40.71	50	ND	82.4	%	81-112
					1.2	R	25
Toluene	40.29	39.14	50	ND	80.6	%	78-109
					2.9	R	25
m&p-Xylenes	83.17	81.26	100	ND	83.2	%	79-113
					2.3	R	25
o-Xylene	40.60	39.49	50	ND	81.2	%	77-114
					2.8	R	25

LCS	Laboratory Control Sample	8020MS1			08/16/1999	1852

Parameter/Test Description	QC Result	QC Result	True Value	Orig. Value	Calc. Result	*	Limits
Benzene	46.161		50		92.3	%	70-130
Ethylbenzene	46.79		50		93.6	%	70-130
Toluene	45.74		50		91.5	%	70-130
m&p-Xylenes	94.06		100		94.1	%	70-130
o-Xylene	46.63		50		93.3	%	70-130

Test Method.....: EPA 8021B
Method Description.: BTEX

Batch.....: 44930
Units.....: ug/L

Analyst...: weh

LCS	Laboratory Control Sample	8020MS1			08/17/1999	0859

Parameter/Test Description	QC Result	QC Result	True Value	Orig. Value	Calc. Result	*	Limits
Benzene	46.893		50		93.8	%	70-130
Ethylbenzene	46.34		50		92.7	%	70-130
Toluene	46.13		50		92.3	%	70-130
m&p-Xylenes	93.02		100		93.0	%	70-130
o-Xylene	46.14		50		92.3	%	70-130

* %=% REC, R=RPD, A=ABS Diff., D=% Diff.

CORE LABORATORIES

QUALITY CONTROL RESULTS

Job Number.: 908924 | Report Date.: 08/18/99

CUSTOMER: Marathon Oil Company | PROJECT: MOC - Bertha Barber | ATTN: Mr. Paul Peacock

QC Type	Description	Reag. Code	Lab ID	Dilution Factor	Date	Time
MB	Method Blank				08/17/1999	0941

Parameter/Test Description	QC Result	QC Result	True Value	Orig. Value	Calc. Result	*	Limits
Benzene	ND						
Ethylbenzene	ND						
Toluene	ND						
m&p-Xylenes	ND						
o-Xylene	ND						

QC Type	Description	Reag. Code	Lab ID	Dilution Factor	Date	Time
LCS	Laboratory Control Sample	8020MS1			08/17/1999	1119

Parameter/Test Description	QC Result	QC Result	True Value	Orig. Value	Calc. Result	*	Limits
Benzene	46.837		50		93.7	%	70-130
Ethylbenzene	45.65		50		91.3	%	70-130
Toluene	46.28		50		92.6	%	70-130
m&p-Xylenes	91.84		100		91.8	%	70-130
o-Xylene	45.46		50		90.9	%	70-130

Test Method.....: EPA 8015B | Batch.....: 44731 | Analyst...: rjm
Method Description.: Gasoline Range Organics (GC/FID) | Units.....: mg/L

QC Type	Description	Reag. Code	Lab ID	Dilution Factor	Date	Time
LCS	Laboratory Control Sample	GROSTD			08/11/1999	0918

Parameter/Test Description	QC Result	QC Result	True Value	Orig. Value	Calc. Result	*	Limits
Gasoline Range Organics	5.419		5.0		108.4	%	70-130

QC Type	Description	Reag. Code	Lab ID	Dilution Factor	Date	Time
MB	Method Blank				08/11/1999	1120

Parameter/Test Description	QC Result	QC Result	True Value	Orig. Value	Calc. Result	*	Limits
Gasoline Range Organics	0.277						

QC Type	Description	Reag. Code	Lab ID	Dilution Factor	Date	Time
MS	Matrix Spike	GROSTD	908924-9		08/11/1999	1822

Parameter/Test Description	QC Result	QC Result	True Value	Orig. Value	Calc. Result	*	Limits
Gasoline Range Organics	4.449		5.0	0.027	88.4	%	55-123

QC Type	Description	Reag. Code	Lab ID	Dilution Factor	Date	Time
MSD	Matrix Spike Duplicate	GROSTD	908924-9		08/11/1999	1859

Parameter/Test Description	QC Result	QC Result	True Value	Orig. Value	Calc. Result	*	Limits
Gasoline Range Organics	4.636	4.449	5.0	0.027	92.2	%	55-123
					4.1	R	20

* %=% REC, R=RPD, A=ABS Diff., D=% Diff.

CORE LABORATORIES

QUALITY CONTROL RESULTS

Job Number.: 908924

Report Date.: 08/18/99

CUSTOMER: Marathon Oil Company | PROJECT: MOC - Bertha Barber | ATTN: Mr. Paul Peacock

QC Type	Description	Reag. Code	Lab ID	Dilution Factor	Date	Time

Test Method.....: EPA 8015B
Method Description.: Gasoline Range Organics (GC/FID)
Batch.....: 44788
Units.....: mg/L
Analyst...: weh

LCS	Laboratory Control Sample	GROSTD			08/13/1999	1030

Parameter/Test Description	QC Result	QC Result	True Value	Orig. Value	Calc. Result	*	Limits
Gasoline Range Organics	5.536		5.0		110.7	%	70-130

MB	Method Blank				08/13/1999	1107

Parameter/Test Description	QC Result	QC Result	True Value	Orig. Value	Calc. Result	*	Limits
Gasoline Range Organics	0.037						

LCS	Laboratory Control Sample	GROSTD			08/13/1999	1346

Parameter/Test Description	QC Result	QC Result	True Value	Orig. Value	Calc. Result	*	Limits
Gasoline Range Organics	5.193		5.0		103.9	%	70-130

* %=% REC, R=RPD, A=ABS Diff., D=% Diff.

CORE LABORATORIES

SURROGATE RECOVERIES REPORT

Job Number.: 908924 | Report Date.: 08/18/99

CUSTOMER: Marathon Oil Company | PROJECT: MOC - Bertha Barber | ATTN: Mr. Paul Peacock

Method.....: BTEX
Method Code.....: 8021BX

Batch.....: 44913
Analyst.....: weh

Surrogate	Units
1,4-Difluorobenzene	ug/L

Lab ID	Matrix	QC Type	Dilution	Result	True Value	Percent Recovery	Limits	Flag	Date	Time
	Solid	LCS		47.96	50.00	95.9	45-125		08/16/1999	0913
	Solid	MB		47.12	50.00	94.2	45-125		08/16/1999	1004
908924-1	Solid			43.28	50.00	86.6	45-125		08/16/1999	1054
908924-3	Solid			39.28	50.00	78.6	45-125		08/16/1999	1207
908924-4	Solid			41.57	50.00	83.1	45-125		08/16/1999	1244
908924-1	Solid	MS		40.52	50.00	81.0	45-125		08/16/1999	1321
908924-1	Solid	MSD		42.23	50.00	84.5	45-125		08/16/1999	1357
908924-2	Solid		10	45.96	50.00	91.9	45-125		08/16/1999	1434
908924-5	Solid			29.21	50.00	58.4	45-125		08/16/1999	1511
908924-6	Solid			31.65	50.00	63.3	45-125		08/16/1999	1548
908924-7	Solid			39.41	50.00	78.8	45-125		08/16/1999	1624
908924-8	Solid			36.32	50.00	72.6	45-125		08/16/1999	1702
908924-9	Solid			40.42	50.00	80.8	45-125		08/16/1999	1739
908943-1	Solid			31.20	50.00	62.4	45-125		08/16/1999	1815
	Solid	LCS		47.11	50.00	94.2	45-125		08/16/1999	1852

Surrogate	Units
BFB (Surrogate)	ug/L

Lab ID	Matrix	QC Type	Dilution	Result	True Value	Percent Recovery	Limits	Flag	Date	Time
	Solid	LCS		48.32	50.00	96.6	58-130		08/16/1999	0913
	Solid	MB		46.63	50.00	93.3	58-130		08/16/1999	1004
908924-1	Solid			42.33	50.00	84.7	58-130		08/16/1999	1054
908924-3	Solid			56.86	50.00	113.7	58-130		08/16/1999	1207
908924-4	Solid			39.88	50.00	79.8	58-130		08/16/1999	1244
908924-1	Solid	MS		39.64	50.00	79.3	58-130		08/16/1999	1321
908924-1	Solid	MSD		41.04	50.00	82.1	58-130		08/16/1999	1357
908924-2	Solid		10	50.42	50.00	100.8	58-130		08/16/1999	1434
908924-5	Solid			30.86	50.00	61.7	58-130		08/16/1999	1511
908924-6	Solid			30.46	50.00	60.9	58-130		08/16/1999	1548
908924-7	Solid			39.37	50.00	78.7	58-130		08/16/1999	1624
908924-8	Solid			36.36	50.00	72.7	58-130		08/16/1999	1702
908924-9	Solid			40.34	50.00	80.7	58-130		08/16/1999	1739
908943-1	Solid			29.00	50.00	58.0	58-130		08/16/1999	1815
	Solid	LCS		47.17	50.00	94.3	58-130		08/16/1999	1852

CORE LABORATORIES

SURROGATE RECOVERIES REPORT

Job Number.: 908924

Report Date.: 08/18/99

CUSTOMER: Marathon Oil Company | PROJECT: MOC - Bertha Barber | ATTN: Mr. Paul Peacock

Method.....: BTEX
Method Code.....: 8021BX

Batch.....: 44930
Analyst.....: weh

Surrogate	Units
1,4-Difluorobenzene	ug/L

Lab ID	Matrix	QC Type	Dilution	Result	True Value	Percent Recovery	Limits	Flag	Date	Time
		LCS		47.47	50.00	94.9	78-118		08/17/1999	0859
		MB		46.81	50.00	93.6	78-118		08/17/1999	0941
908924-10				47.51	50.00	95.0	78-118		08/17/1999	1029
		LCS		46.16	50.00	92.3	78-118		08/17/1999	1119

Surrogate	Units
BFB (Surrogate)	ug/L

Lab ID	Matrix	QC Type	Dilution	Result	True Value	Percent Recovery	Limits	Flag	Date	Time
		LCS		47.10	50.00	94.2	86-110		08/17/1999	0859
		MB		46.03	50.00	92.1	86-110		08/17/1999	0941
908924-10				46.91	50.00	93.8	86-110		08/17/1999	1029
		LCS		45.82	50.00	91.6	86-110		08/17/1999	1119

CORE LABORATORIES

QUALITY ASSURANCE FOOTER

METHOD REFERENCES

1. EPA SW-846, Test Methods for Evaluating Solid Waste Update I, IIA, IIB, III
2. Standard Methods for the Examination of Water and Wastewater, 18th Edition
3. EPA 600/4-79-020, Methods of Chemical Analysis for Waters and Wastes, March 1983
4. Federal Register, Friday, October 26, 1984 (40 CFR Part 136)
5. American Society for Testing and Materials, Volumes 5.01, 5.02, 5.03, 11.01,11.02,11.03,11.04
6. EPA Methods for Environmental Samples

COMMENTS

All methods of chemical analysis have a statistical uncertainty associated with the results. Unless otherwise indicated, the data in this report are within the limits of uncertainty as specified in the referenced method. Quality Control acceptance criteria are based either on actual laboratory performance or on limits specified in the referenced method. The date and time of analysis indicated on the QA report may not reflect the actual time of analysis for QC samples. All data are reported on an "as received" basis unless otherwise indicated. Data reported in the QA report may be lower than sample data due to dilution of samples into the calibration range of the analysis. Sample concentration for solid samples are calculated on an as received (wet) basis. Unless otherwise indicated, volatiles by gas chromatography (GC) are reported from a single column. Volatile analysis by GC on low level soil extractions are conducted at room temperature.

FLAGS, FOOTNOTES AND ABBREVIATIONS (as needed)

NA	=	Not Analyzed	ND	=	Not detected at a value greater than the reporting limit
N/A	=	Not applicable	NC	=	Not calculable due to values lower than the reporting limit
ug/L	=	Micrograms per liter	mg/L	=	Milligrams per liter
ug/Kg	=	Micrograms per kilogram	mg/kg	=	Milligrams per kilogram
U	=	Undetected			
J	=	Indicates value is > MDL, but < Reporting Limit			
B	=	Analyte was detected in the method blank analyzed with this sample.			
D	=	Surrogate recoveries are not calculated due to sample dilution.			
X	=	Surrogate recovery is outside quality control limits.			
Y	=	Spike or spike duplicate recovery is outside quality control limits.			
Z	=	Relative percent difference for a spike and spike duplicate is outside quality control limits. The precision of the method was impacted by matrix.			
^	=	Indicates value is above QC acceptance criteria.			

QC SAMPLE IDENTIFICATIONS

MB	=	Method Blank	SB	=	Storage Blank
RB	=	Reagent Blank	EB	=	Extraction Blank
PB	=	Preparation Blank	CALB	=	Calibration Blank
MD	=	Method Duplicate	RS	=	Reference Standard
LCS	=	Laboratory Control Sample	LCSD	=	Laboratory Control Sample Duplicate
MS	=	Matrix Spike	MSD	=	Matrix Spike Duplicate
ICB	=	Initial Calibration Blank	CCB	=	Continuing Calibration Blank
ICV	=	Initial Calibration Verification	ICB	=	Initial Calibration Blank
PDS	=	Post Digestion Spike	SS	=	Surrogate Spike
ISA	=	Interference Check standard "A"	ISB	=	Interference Check Standard "B"
ISCAB	=	Interference Check Sample AB	MSA	=	Method of Standard Additions
CAL	=	Calibration standard	SD	=	Serial Dilution
MST	=	TCLP Matrix Spike	MSQ	=	TCLP Matrix Spike Duplicate
PST	=	TCLP Post Digestion Spike	LCT	=	TCLP Laboratory Control Sample

SUBCONTRACTED LABORATORY LOCATIONS

CORE Laboratories:	Anaheim, California	*AN	Aurora, Colorado	*AU
	Casper, Wyoming	*CA	Corpus Christi, Texas	*CC
	Houston, Texas (Env)	*HE	Houston, Texas (Pet)	*HP
	Other (Detailed in Case Narrative)	*XX		

rpjsckl

Job Sample Receipt Checklist Report

08/10/99

V2

Job Number.....: 908924 Location.: 57211 Customer Job ID.....: Job Check List Date.: 08/10/99
Project Number.: 96000703 Project Description.: MOC - Bertha Barber Project Manager.....: lpa
Customer.....: Marathon Oil Company Contact.: Mr. Paul Peacock

Questions ?	(Y/N)	Comments
Chain-of-Custody Present?.....	Y	
Custody seal on shipping container?.....		
...If "yes", custody seal intact?.....		
Custody seals on sample containers?.....		
...If "yes", custody seal intact?.....		
Samples chilled?.....	Y	
Temperature of cooler acceptable? (4 deg C +/- 2).		RECEIVED ON ICE
Samples received intact (good condition)?.....	Y	
Volatile samples acceptable? (no headspace).....	N	TRIP BLANKS HAVE SMALL AIR BUUBLES IN VIALS
Correct containers used?.....	Y	
Adequate sample volume provided?.....	Y	
Samples preserved correctly?.....	Y	
Samples received within holding-time?.....	Y	
Agreement between COC and sample labels?.....	Y	
Additional.....		
Comments.....		
Sample Custodian Signature.....		

GERAGHTY & MILLER, INC.
Environment and Infrastructure
a heidemij company

Laboratory Task Order No._____

CHAIN-OF-CUSTODY RECORD

Page_____ of_____

Project Number NP000449.0002.MT003

Project Location MARATHON Bertha Barber

Laboratory Core

Sampler(s)/Affiliation McNeese AGM
Midland, Tx

908924

SAMPLE BOTTLE / CONTAINER DESCRIPTION

	SAMPLE IDENTITY	Code	Date/~~Time~~ Sampled	Time ~~Lab ID~~	BTEX	TPH								TOTAL
1	MW-6 (28-30)	S	8-3-99	1315	1	1								2
2	MW-7 (32-34)			1740	1	1								2
3	MW-8 (32-34)		8-4-99	1350	1	1								2
4	MW-9 (30-32)			1530	1	1								2
5	MW-10 (32-34)		8-5-99	1000	1	1								2
6	MW 11 (32-34)			1845	1	1								2
7	TPZ-1 (30-32)			1520	1	1								2
8	PZ-2 (32-34)		8-6-99	1100	1	1								2
9	PZ-3 (32-34)			1545	1	1								2
10	Trip Blank	—	—	—	2								DM	2
													DM	1
													Total No. of Bottles/ Containers	21

Sample Code: L = Liquid; S = Solid; A = Air

Relinquished by: [signature]	Organization: ARCADIS	Date 8/9/99	Time 1800	Seal Intact? Yes No N/A
Received by: Jerm Bobo	Organization: CORE	Date 8/10/99	Time 1200	
Relinquished by:	Organization:	Date / /	Time	Seal Intact? Yes No N/A
Received by:	Organization:	Date / /	Time	

Special Instructions/Remarks:

Delivery Method: ☐ In Person ☐ Common Carrier _____ SPECIFY ☐ Lab Courier ☐ Other _____ SPECIFY

Southprint 96-0761

CORE LABORATORIES

ANALYTICAL REPORT

JOB NUMBER: 909284

Prepared For:

Marathon Oil Company
125 West Missouri Street
P.O. Box 552
Midland, TX 79702-0552

Attention: Mr. Paul Peacock

Date: 08/25/99

Signature

Date 8/25/99

Name: Les Arnold

Title: Laboratory Manager

2400 Cumberland Drive
Valparaiso, IN 46383

PHONE: 219-464-2389
FAX..: 219-462-2953

CORE LABORATORIES

SAMPLE INFORMATION
Date: 08/25/99

Job Number.: 909284
Customer...: Marathon Oil Company
Attn.....: Mr. Paul Peacock

Project Number.....: 96000703
Customer Project ID....: NP000449.002.MT003
Project Description....: MOC - Bertha Barber

Laboratory Sample ID	Customer Sample ID	Sample Matrix	Date Sampled	Time Sampled	Date Received	Time Received
909284-1	PZ-4 (32-34')	Solid	08/09/1999	10:50	08/18/1999	13:48

CORE LABORATORIES

LABORATORY TEST RESULTS

Job Number: 909284

Date: 08/25/99

CUSTOMER: Marathon Oil Company PROJECT: NP000449.002.MT003 ATTN: Mr. Paul Peacock

Customer Sample ID: PZ-4 (32-34')
Date Sampled.....: 08/09/1999
Time Sampled.....: 10:50
Sample Matrix.....: Solid

Laboratory Sample ID: 909284-1
Date Received.....: 08/18/1999
Time Received.....: 13:48

TEST METHOD	PARAMETER/TEST DESCRIPTION	SAMPLE RESULT	REPORTING LIMIT	UNITS	DATE	TECH
EPA 8015B	Diesel Range Organics (DRO)					
	Diesel Range Organics, Solid	ND	10.0	mg/Kg	08/24/99	rjm
EPA 8021B	BTEX					
	Benzene, Solid	ND	5.0	ug/Kg	08/20/99	weh
	Ethylbenzene, Solid	ND	5.0	ug/Kg	08/20/99	weh
	Toluene, Solid	ND	5.0	ug/Kg	08/20/99	weh
	m&p-Xylenes, Solid	ND	10.0	ug/Kg	08/20/99	weh
	o-Xylene, Solid	ND	5.0	ug/Kg	08/20/99	weh
EPA 8015B	Gasoline Range Organics (GRO)					
	Gasoline Range Organics, Solid	<1.0	1.0	mg/Kg	08/20/99	weh

CORE LABORATORIES

QUALITY CONTROL RESULTS

Job Number.: 909284

Report Date.: 08/25/99

CUSTOMER: Marathon Oil Company | PROJECT: MOC - Bertha Barber | ATTN: Mr. Paul Peacock

QC Type	Description	Reag. Code	Lab ID	Dilution Factor	Date	Time

Test Method.....: EPA 8015B
Method Description.: Diesel Range Organics (DRO)
Batch.....: 45286
Units.....: mg/L
Analyst...: rjm

MB	Method Blank				08/23/1999	2035

Parameter/Test Description	QC Result	QC Result	True Value	Orig. Value	Calc. Result	*	Limits
Diesel Range Organics	ND						
Crude Oil	ND						

LCS	Laboratory Control Sample	CRUDE			08/23/1999	2121

Parameter/Test Description	QC Result	QC Result	True Value	Orig. Value	Calc. Result	*	Limits
Crude Oil	579.85		500		116.0	%	70-130

MS	Matrix Spike	CRUDE	909360-1		08/23/1999	2252

Parameter/Test Description	QC Result	QC Result	True Value	Orig. Value	Calc. Result	*	Limits
Crude Oil	445.00		500	ND	89.0	%	70-130

MSD	Matrix Spike Duplicate	CRUDE	909360-1		08/23/1999	2337

Parameter/Test Description	QC Result	QC Result	True Value	Orig. Value	Calc. Result	*	Limits
Crude Oil	626.36	445.00	500	ND	125.3	%	70-130
					33.9	R	30

Test Method.....: EPA 8021B
Method Description.: BTEX
Batch.....: 45181
Units.....: ug/L
Analyst...: weh

LCS	Laboratory Control Sample	8020MS1			08/20/1999	1413

Parameter/Test Description	QC Result	QC Result	True Value	Orig. Value	Calc. Result	*	Limits
Benzene	49.346		50		98.7	%	70-130
Ethylbenzene	49.80		50		99.6	%	70-130
Toluene	49.11		50		98.2	%	70-130
m&p-Xylenes	100.34		100		100.3	%	70-130
o-Xylene	49.60		50		99.2	%	70-130

MB	Method Blank				08/20/1999	1450

Parameter/Test Description	QC Result	QC Result	True Value	Orig. Value	Calc. Result	*	Limits
Benzene	ND						
Ethylbenzene	ND						
Toluene	ND						
m&p-Xylenes	ND						
o-Xylene	ND						

* %=% REC, R=RPD, A=ABS Diff., D=% Diff.

CORE LABORATORIES

QUALITY CONTROL RESULTS

Job Number.: 909284 Report Date.: 08/25/99

CUSTOMER: Marathon Oil Company PROJECT: MOC - Bertha Barber ATTN: Mr. Paul Peacock

QC Type	Description	Reag. Code	Lab ID	Dilution Factor	Date	Time
MS	Matrix Spike	8020MS1	909284-1		08/20/1999	1604

Parameter/Test Description	QC Result	QC Result	True Value	Orig. Value	Calc. Result	*	Limits
Benzene	45.026		50	ND	90.1	%	70-119
Ethylbenzene	45.79		50	ND	91.6	%	81-112
Toluene	44.83		50	ND	89.7	%	78-109
m&p-Xylenes	92.55		100	ND	92.5	%	79-113
o-Xylene	45.30		50	ND	90.6	%	77-114

MSD	Matrix Spike Duplicate	8020MS1	909284-1		08/20/1999	1641

Parameter/Test Description	QC Result	QC Result	True Value	Orig. Value	Calc. Result	*	Limits
Benzene	44.471	45.026	50	ND	88.9	%	70-119
					1.2	R	25
Ethylbenzene	45.23	45.79	50	ND	90.5	%	81-112
					1.2	R	25
Toluene	44.37	44.83	50	ND	88.7	%	78-109
					1.0	R	25
m&p-Xylenes	91.48	92.55	100	ND	91.5	%	79-113
					1.2	R	25
o-Xylene	44.83	45.30	50	ND	89.7	%	77-114
					1.0	R	25

LCS	Laboratory Control Sample	8020MS1			08/20/1999	1718

Parameter/Test Description	QC Result	QC Result	True Value	Orig. Value	Calc. Result	*	Limits
Benzene	45.903		50		91.8	%	70-130
Ethylbenzene	47.06		50		94.1	%	70-130
Toluene	45.72		50		91.4	%	70-130
m&p-Xylenes	94.76		100		94.8	%	70-130
o-Xylene	46.96		50		93.9	%	70-130

Test Method.....: EPA 8015B Batch.....: 45139 Analyst...: weh
Method Description.: Gasoline Range Organics (GRO) Units.....: mg/L

LCS	Laboratory Control Sample	GROSTD			08/20/1999	0952

Parameter/Test Description	QC Result	QC Result	True Value	Orig. Value	Calc. Result	*	Limits
Gasoline Range Organics	5.335		5.0		106.7	%	70-130

MB	Method Blank				08/20/1999	1040

Parameter/Test Description	QC Result	QC Result	True Value	Orig. Value	Calc. Result	*	Limits
Gasoline Range Organics	0.077						

* %=% REC, R=RPD, A=ABS Diff., D=% Diff.

CORE LABORATORIES

QUALITY CONTROL RESULTS

Job Number.: 909284

Report Date.: 08/25/99

CUSTOMER: Marathon Oil Company | PROJECT: MOC - Bertha Barber | ATTN: Mr. Paul Peacock

QC Type	Description	Reag. Code	Lab ID	Dilution Factor	Date	Time
MS	Matrix Spike	GROSTD	909284-1		08/20/1999	1223

Parameter/Test Description	QC Result	QC Result	True Value	Orig. Value	Calc. Result	*	Limits
Gasoline Range Organics	4.682		5.0	0.033	93.0	%	55-123

QC Type	Description	Reag. Code	Lab ID	Dilution Factor	Date	Time
MSD	Matrix Spike Duplicate	GROSTD	909284-1		08/20/1999	1259

Parameter/Test Description	QC Result	QC Result	True Value	Orig. Value	Calc. Result	*	Limits
Gasoline Range Organics	4.730	4.682	5.0	0.033	93.9	%	55-123
					1.0	R	20

QC Type	Description	Reag. Code	Lab ID	Dilution Factor	Date	Time
LCS	Laboratory Control Sample	GROSTD			08/20/1999	1336

Parameter/Test Description	QC Result	QC Result	True Value	Orig. Value	Calc. Result	*	Limits
Gasoline Range Organics	5.313		5.0		106.3	%	70-130

* %=% REC, R=RPD, A=ABS Diff., D=% Diff.

CORE LABORATORIES

SURROGATE RECOVERIES REPORT

Job Number.: 909284

Report Date.: 08/25/99

CUSTOMER: Marathon Oil Company

PROJECT: MOC - Bertha Barber

ATTN: Mr. Paul Peacock

Method.....: BTEX
Method Code.....: 8021BX

Batch.....: 45181
Analyst.....: weh

Surrogate	Units
1,4-Difluorobenzene	ug/L

Lab ID	Matrix	QC Type	Dilution	Result	True Value	Percent Recovery	Limits	Flag	Date	Time
	Solid	LCS		48.41	50.00	96.8	45-125		08/20/1999	1413
	Solid	MB		48.25	50.00	96.5	45-125		08/20/1999	1450
909284-1	Solid			43.15	50.00	86.3	45-125		08/20/1999	1527
909284-1	Solid	MS		45.93	50.00	91.9	45-125		08/20/1999	1604
909284-1	Solid	MSD		44.87	50.00	89.7	45-125		08/20/1999	1641
	Solid	LCS		46.48	50.00	93.0	45-125		08/20/1999	1718

Surrogate	Units
BFB (Surrogate)	ug/L

Lab ID	Matrix	QC Type	Dilution	Result	True Value	Percent Recovery	Limits	Flag	Date	Time
	Solid	LCS		48.80	50.00	97.6	58-130		08/20/1999	1413
	Solid	MB		47.39	50.00	94.8	58-130		08/20/1999	1450
909284-1	Solid			42.25	50.00	84.5	58-130		08/20/1999	1527
909284-1	Solid	MS		45.57	50.00	91.1	58-130		08/20/1999	1604
909284-1	Solid	MSD		44.98	50.00	90.0	58-130		08/20/1999	1641
	Solid	LCS		47.13	50.00	94.3	58-130		08/20/1999	1718

CORE LABORATORIES

QUALITY ASSURANCE FOOTER

METHOD REFERENCES

1. EPA SW-846, Test Methods for Evaluating Solid Waste Update I, IIA, IIB, III
2. Standard Methods for the Examination of Water and Wastewater, 18th Edition
3. EPA 600/4-79-020, Methods of Chemical Analysis for Waters and Wastes, March 1983
4. Federal Register, Friday, October 26, 1984 (40 CFR Part 136)
5. American Society for Testing and Materials, Volumes 5.01, 5.02, 5.03, 11.01,11.02,11.03,11.04
6. EPA Methods for Environmental Samples

COMMENTS

All methods of chemical analysis have a statistical uncertainty associated with the results. Unless otherwise indicated, the data in this report are within the limits of uncertainty as specified in the referenced method. Quality Control acceptance criteria are based either on actual laboratory performance or on limits specified in the referenced method. The date and time of analysis indicated on the QA report may not reflect the actual time of analysis for QC samples. All data are reported on an "as received" basis unless otherwise indicated. Data reported in the QA report may be lower than sample data due to dilution of samples into the calibration range of the analysis. Sample concentration for solid samples are calculated on an as received (wet) basis. Unless otherwise indicated, volatiles by gas chromatography (GC) are reported from a single column. Volatile analysis by GC on low level soil extractions are conducted at room temperature.

FLAGS, FOOTNOTES AND ABBREVIATIONS (as needed)

NA	=	Not Analyzed	ND	=	Not detected at a value greater than the reporting limit
N/A	=	Not applicable	NC	=	Not calculable due to values lower than the reporting limit
ug/L	=	Micrograms per liter	mg/L	=	Milligrams per liter
ug/Kg	=	Micrograms per kilogram	mg/kg	=	Milligrams per kilogram
U	=	*Undetected*			
J	=	Indicates value is > MDL, but < Reporting Limit			
B	=	Analyte was detected in the method blank analyzed with this sample.			
D	=	Surrogate recoveries are not calculated due to sample dilution.			
X	=	Surrogate recovery is outside quality control limits.			
Y	=	Spike or spike duplicate recovery is outside quality control limits.			
Z	=	Relative percent difference for a spike and spike duplicate is outside quality control limits. The precision of the method was impacted by matrix.			
^	=	Indicates value is above QC acceptance criteria.			

QC SAMPLE IDENTIFICATIONS

MB	=	Method Blank	SB	=	Storage Blank
RB	=	Reagent Blank	EB	=	Extraction Blank
PB	=	Preparation Blank	CALB	=	Calibration Blank
MD	=	Method Duplicate	RS	=	Reference Standard
LCS	=	Laboratory Control Sample	LCSD	=	Laboratory Control Sample Duplicate
MS	=	Matrix Spike	MSD	=	Matrix Spike Duplicate
ICB	=	Initial Calibration Blank	CCB	=	Continuing Calibration Blank
ICV	=	Initial Calibration Verification	ICB	=	Initial Calibration Blank
PDS	=	Post Digestion Spike	SS	=	Surrogate Spike
ISA	=	Interference Check standard "A"	ISB	=	Interference Check Standard "B"
ISCAB	=	Interference Check Sample AB	MSA	=	Method of Standard Additions
CAL	=	Calibration standard	SD	=	Serial Dilution
MST	=	TCLP Matrix Spike	MSQ	=	TCLP Matrix Spike Duplicate
PST	=	TCLP Post Digestion Spike	LCT	=	TCLP Laboratory Control Sample

SUBCONTRACTED LABORATORY LOCATIONS

CORE Laboratories:	Anaheim, California	*AN	Aurora, Colorado	*AU
	Casper, Wyoming	*CA	Corpus Christi, Texas	*CC
	Houston, Texas (Env)	*HE	Houston, Texas (Pet)	*HP
	Other (Detailed in Case Narrative)	*XX		

rpjsckl

Job Sample Receipt Checklist Report
08/18/99

V2

Job Number.....: 909284 Location.: 57211 Customer Job ID.....:
Job Check List Date.: 08/18/99
Project Number.: 96000703 Project Description.: MOC - Bertha Barber
Project Manager.....: lpa
Customer.....: Marathon Oil Company Contact.: Mr. Paul Peacock

Questions ?	(Y/N)	Comments
Chain-of-Custody Present?.....	Y	
Custody seal on shipping container?.....		
...If "yes", custody seal intact?.....		
Custody seals on sample containers?.....		
...If "yes", custody seal intact?.....		
Samples chilled?.....	N	
Temperature of cooler acceptable? (4 deg C +/- 2).	N	
Samples received intact (good condition)?.....	Y	
Volatile samples acceptable? (no headspace).....	N/A	
Correct containers used?.....	Y	
Adequate sample volume provided?.....	Y	
Samples preserved correctly?.....	Y	
Samples received within holding-time?.....	Y	
Agreement between COC and sample labels?.....	Y	
Additional.....		
Comments.....		
Sample Custodian Signature.....		

GERAGHTY & MILLER, INC.
Environment and Infrastructure
a **heidemij** company

Laboratory Task Order No. 909284

CHAIN-OF-CUSTODY RECORD

Page ____ of ____

Project Number NP002449.0002.MT003

Project Location MARATHON BerthaBarber

Laboratory Core

Sampler(s)/Affiliation McNeese AGM
Midland, Tx.

	SAMPLE IDENTITY	Code	Date/~~Time~~ Sampled	Time ~~Lab ID~~	BTEX Soil	TPH Soil								TOTAL
1	PZ-4(32-34)	S	8-9-99	1250	1	1								2

SAMPLE BOTTLE / CONTAINER DESCRIPTION

Total No. of Bottles/Containers ____

Sample Code: L = Liquid; S = Solid; A = Air

Relinquished by: McNeese	Organization: ARCADIS Geraghty & Miller	Date 8/9/99	Time 1200	Seal Intact?
Received by: Jam Bob	Organization: CORE	Date 8/18/99	Time 1100	[✓ Yes] No N/A
Relinquished by:	Organization:	Date / /	Time	Seal Intact?
Received by:	Organization:	Date / /	Time	Yes No N/A

Special Instructions/Remarks:

Delivery Method: ☐ In Person ☑ Common Carrier ____ SPECIFY ☐ Lab Courier ☐ Other ____ SPECIFY

Appendix C

Groundwater Delineation Laboratory
Analytical Report

CORE LABORATORIES

ANALYTICAL REPORT

JOB NUMBER: 909264

Prepared For:

Marathon Oil Company
125 West Missouri Street
P.O. Box 552
Midland, TX 79702-0552

Attention: Mr. Paul Peacock

Date: 08/26/99

Les Arnold
Signature

Date 8/26/99

Name: Les Arnold

Title: Laboratory Manager

2400 Cumberland Drive
Valparaiso, IN 46383

PHONE: 219-464-2389
FAX..: 219-462-2953

CORELAB

CORE LABORATORIES

SAMPLE INFORMATION
Date: 08/26/99

Job Number.: 909264
Customer...: Marathon Oil Company
Attn.....: Mr. Paul Peacock

Project Number.....: 96000703
Customer Project ID....: BERTHA BARBER
Project Description....: MOC - Bertha Barber

Laboratory Sample ID	Customer Sample ID	Sample Matrix	Date Sampled	Time Sampled	Date Received	Time Received
909264-1	MW-06	Aqueous	08/17/1999	11:15	08/18/1999	10:53
909264-2	MW-07	Aqueous	08/17/1999	11:55	08/18/1999	10:53
909264-3	MW-08	Aqueous	08/17/1999	12:15	08/18/1999	10:53
909264-4	MW-09	Aqueous	08/17/1999	12:50	08/18/1999	10:53
909264-5	MW-10	Aqueous	08/17/1999	13:35	08/18/1999	10:53
909264-6	MW-11	Aqueous	08/17/1999	14:00	08/18/1999	10:53
909264-7	PZ1	Aqueous	08/17/1999	14:30	08/18/1999	10:53
909264-8	PZ2	Aqueous	08/17/1999	15:05	08/18/1999	10:53
909264-9	PZ3	Aqueous	08/17/1999	15:40	08/18/1999	10:53
909264-10	PZ4	Aqueous	08/17/1999	16:10	08/18/1999	10:53

CORE LABORATORIES

LABORATORY TEST RESULTS

Job Number: 909264

Date: 08/26/99

CUSTOMER: Marathon Oil Company | PROJECT: BERTHA BARBER | ATTN: Mr. Paul Peacock

Customer Sample ID: MW-06
Date Sampled.....: 08/17/1999
Time Sampled.....: 11:15
Sample Matrix.....: Aqueous

Laboratory Sample ID: 909264-1
Date Received.....: 08/18/1999
Time Received.....: 10:53

TEST METHOD	PARAMETER/TEST DESCRIPTION	SAMPLE RESULT	REPORTING LIMIT	UNITS	DATE	TECH
EPA 160.1	Solids, Total Dissolved (TDS)	4700	10	mg/L	08/19/99	jaw
EPA 300.0	Chloride	2460	100	mg/L	08/19/99	kso
EPA 300.0	Fluoride (F)	<5.0	5.0	mg/L	08/19/99	kso
EPA 300.0	Nitrogen, Nitrate as N (NO3-N)	<1.0	1.0	mg/L	08/19/99	kso
EPA 300.0	Sulfate (SO4)	188	10	mg/L	08/19/99	kso
EPA 7470	Mercury (Hg), Diss.	<0.0002	0.0002	mg/L	08/19/99	pal
EPA 3510	Separatory Funnel Liq/Liq Extraction	Complete			08/19/99	bjl
EPA 6010B	Metals Analysis (ICAP)					
	Aluminum (Al), Diss.	0.12	0.05	mg/L	08/20/99	chh
	Arsenic (As), Diss.	<0.02	0.02	mg/L	08/19/99	chh
	Barium (Ba), Diss.	0.14	0.01	mg/L	08/19/99	chh
	Boron (B), Diss.	0.39	0.05	mg/L	08/20/99	chh
	Cadmium (Cd), Diss.	<0.005	0.005	mg/L	08/19/99	chh
	Calcium (Ca), Diss.	573	0.5	mg/L	08/20/99	chh
	Chromium (Cr), Diss.	<0.01	0.01	mg/L	08/19/99	chh
	Cobalt (Co), Diss.	<0.02	0.02	mg/L	08/20/99	chh
	Copper (Cu), Diss.	<0.01	0.01	mg/L	08/19/99	chh
	Iron (Fe), Diss.	<0.05	0.05	mg/L	08/20/99	chh
	Lead (Pb), Diss.	<0.05	0.05	mg/L	08/19/99	chh
	Magnesium (Mg), Diss.	115	0.1	mg/L	08/19/99	chh
	Manganese (Mn), Diss.	0.21	0.01	mg/L	08/19/99	chh
	Molybdenum (Mo), Diss.	<0.05	0.05	mg/L	08/25/99	pal
	Nickel (Ni), Diss.	<0.01	0.01	mg/L	08/25/99	pal
	Potassium (K), Diss.	11.7	0.5	mg/L	08/20/99	chh
	Selenium (Se), Diss.	<0.02	0.02	mg/L	08/19/99	chh
	Sodium (Na), Diss.	640	10	mg/L	08/23/99	pal
	Silver (Ag), Diss.	<0.01	0.01	mg/L	08/19/99	chh
	Zinc (Zn), Diss.	0.02	0.01	mg/L	08/19/99	chh
EPA 8310	Polynuclear Aromatic Hydrocarbons-HPLC					
	Acenaphthene	ND	5.0	ug/L	08/20/99	rm
	Acenaphthylene	ND	5.0	ug/L	08/20/99	rm
	Anthracene	ND	1.0	ug/L	08/20/99	rm
	Benzo(b)fluoranthene	ND	0.10	ug/L	08/20/99	rm
	Benzo(k)fluoranthene	ND	0.10	ug/L	08/20/99	rm
	Benzo(a)anthracene	ND	0.10	ug/L	08/20/99	rm
	Benzo(a)pyrene	ND	0.10	ug/L	08/20/99	rm
	Benzo(ghi)perylene	ND	0.10	ug/L	08/20/99	rm
	Chrysene	ND	1.0	ug/L	08/20/99	rm
	Dibenzo(a,h)anthracene	ND	0.10	ug/L	08/20/99	rm
	Fluoranthene	ND	1.0	ug/L	08/20/99	rm

CORE LABORATORIES

LABORATORY TEST RESULTS

Job Number: 909264

Date: 08/26/99

CUSTOMER: Marathon Oil Company PROJECT: BERTHA BARBER ATTN: Mr. Paul Peacock

Customer Sample ID: MW-06
Date Sampled.....: 08/17/1999
Time Sampled.....: 11:15
Sample Matrix.....: Aqueous

Laboratory Sample ID: 909264-1
Date Received.....: 08/18/1999
Time Received.....: 10:53

TEST METHOD	PARAMETER/TEST DESCRIPTION	SAMPLE RESULT	REPORTING LIMIT	UNITS	DATE	TECH
	Fluorene	ND	1.0	ug/L	08/20/99	rm
	Indeno(1,2,3-cd)pyrene	ND	0.10	ug/L	08/20/99	rm
	Naphthalene	ND	5.0	ug/L	08/20/99	rm
	Phenanthrene	ND	1.0	ug/L	08/20/99	rm
	Pyrene	<1.0	1.0	ug/L	08/20/99	rm
EPA 8260B	Volatile Organic Compounds					
	Benzene	ND	5	ug/L	08/18/99	weh
	Ethylbenzene	ND	5	ug/L	08/18/99	weh
	Toluene	ND	5	ug/L	08/18/99	weh
	Xylenes (total)	ND	10	ug/L	08/18/99	weh

CORE LABORATORIES

LABORATORY TEST RESULTS

Job Number: 909264

Date: 08/26/99

CUSTOMER: Marathon Oil Company PROJECT: BERTHA BARBER ATTN: Mr. Paul Peacock

Customer Sample ID: MW-07
Date Sampled.....: 08/17/1999
Time Sampled.....: 11:55
Sample Matrix.....: Aqueous

Laboratory Sample ID: 909264-2
Date Received.....: 08/18/1999
Time Received.....: 10:53

TEST METHOD	PARAMETER/TEST DESCRIPTION	SAMPLE RESULT	REPORTING LIMIT	UNITS	DATE	TECH
EPA 160.1	Solids, Total Dissolved (TDS)	2800	10	mg/L	08/19/99	jaw
EPA 300.0	Chloride	1400	100	mg/L	08/19/99	kso
EPA 300.0	Fluoride (F)	<5.0	5.0	mg/L	08/19/99	kso
EPA 300.0	Nitrogen, Nitrate as N (NO3-N)	<1.0	1.0	mg/L	08/19/99	kso
EPA 300.0	Sulfate (SO4)	84	10	mg/L	08/19/99	kso
EPA 7470	Mercury (Hg), Diss.	<0.0002	0.0002	mg/L	08/19/99	pal
EPA 3510	Separatory Funnel Liq/Liq Extraction	Complete			08/19/99	bjl
EPA 6010B	Metals Analysis (ICAP)					
	Aluminum (Al), Diss.	<0.05	0.05	mg/L	08/20/99	chh
	Arsenic (As), Diss.	<0.02	0.02	mg/L	08/19/99	chh
	Barium (Ba), Diss.	0.44	0.01	mg/L	08/19/99	chh
	Boron (B), Diss.	0.42	0.05	mg/L	08/20/99	chh
	Cadmium (Cd), Diss.	<0.005	0.005	mg/L	08/19/99	chh
	Calcium (Ca), Diss.	379	0.5	mg/L	08/20/99	chh
	Chromium (Cr), Diss.	<0.01	0.01	mg/L	08/19/99	chh
	Cobalt (Co), Diss.	<0.02	0.02	mg/L	08/20/99	chh
	Copper (Cu), Diss.	<0.01	0.01	mg/L	08/19/99	chh
	Iron (Fe), Diss.	<0.05	0.05	mg/L	08/20/99	chh
	Lead (Pb), Diss.	<0.05	0.05	mg/L	08/19/99	chh
	Magnesium (Mg), Diss.	102	0.1	mg/L	08/19/99	chh
	Manganese (Mn), Diss.	0.06	0.01	mg/L	08/19/99	chh
	Molybdenum (Mo), Diss.	<0.05	0.05	mg/L	08/25/99	pal
	Nickel (Ni), Diss.	<0.01	0.01	mg/L	08/25/99	pal
	Potassium (K), Diss.	9.7	0.5	mg/L	08/20/99	chh
	Selenium (Se), Diss.	0.03	0.02	mg/L	08/19/99	chh
	Sodium (Na), Diss.	560	10	mg/L	08/23/99	pal
	Silver (Ag), Diss.	<0.01	0.01	mg/L	08/19/99	chh
	Zinc (Zn), Diss.	<0.01	0.01	mg/L	08/19/99	chh
EPA 8310	Polynuclear Aromatic Hydrocarbons-HPLC					
	Acenaphthene	ND	5.0	ug/L	08/24/99	rm
	Acenaphthylene	ND	5.0	ug/L	08/24/99	rm
	Anthracene	ND	1.0	ug/L	08/24/99	rm
	Benzo(b)fluoranthene	ND	0.10	ug/L	08/24/99	rm
	Benzo(k)fluoranthene	ND	0.10	ug/L	08/24/99	rm
	Benzo(a)anthracene	ND	0.10	ug/L	08/24/99	rm
	Benzo(a)pyrene	ND	0.10	ug/L	08/24/99	rm
	Benzo(ghi)perylene	ND	0.10	ug/L	08/24/99	rm
	Chrysene	ND	1.0	ug/L	08/24/99	rm
	Dibenzo(a,h)anthracene	ND	0.10	ug/L	08/24/99	rm
	Fluoranthene	ND	1.0	ug/L	08/24/99	rm

CORE LABORATORIES

LABORATORY TEST RESULTS

Job Number: 909264

Date: 08/26/99

CUSTOMER: Marathon Oil Company PROJECT: BERTHA BARBER ATTN: Mr. Paul Peacock

Customer Sample ID: MW-07
Date Sampled.....: 08/17/1999
Time Sampled.....: 11:55
Sample Matrix.....: Aqueous

Laboratory Sample ID: 909264-2
Date Received.....: 08/18/1999
Time Received.....: 10:53

TEST METHOD	PARAMETER/TEST DESCRIPTION	SAMPLE RESULT	REPORTING LIMIT	UNITS	DATE	TECH
	Fluorene	ND	1.0	ug/L	08/24/99	rm
	Indeno(1,2,3-cd)pyrene	ND	0.10	ug/L	08/24/99	rm
	Naphthalene	ND	5.0	ug/L	08/24/99	rm
	Phenanthrene	ND	1.0	ug/L	08/24/99	rm
	Pyrene	ND	1.0	ug/L	08/24/99	rm
EPA 8260B	Volatile Organic Compounds					
	Benzene	ND	5	ug/L	08/19/99	weh
	Ethylbenzene	<5	5	ug/L	08/19/99	weh
	Toluene	ND	5	ug/L	08/19/99	weh
	Xylenes (total)	ND	10	ug/L	08/19/99	weh

CORE LABORATORIES

LABORATORY TEST RESULTS

Job Number: 909264

Date: 08/26/99

CUSTOMER: Marathon Oil Company PROJECT: BERTHA BARBER ATTN: Mr. Paul Peacock

Customer Sample ID: MW-08
Date Sampled.....: 08/17/1999
Time Sampled.....: 12:15
Sample Matrix.....: Aqueous

Laboratory Sample ID: 909264-3
Date Received.....: 08/18/1999
Time Received.....: 10:53

TEST METHOD	PARAMETER/TEST DESCRIPTION	SAMPLE RESULT	REPORTING LIMIT	UNITS	DATE	TECH
EPA 160.1	Solids, Total Dissolved (TDS)	3300	10	mg/L	08/19/99	jaw
EPA 300.0	Chloride	1860	100	mg/L	08/19/99	kso
EPA 300.0	Fluoride (F)	<5.0	5.0	mg/L	08/19/99	kso
EPA 300.0	Nitrogen, Nitrate as N (NO3-N)	<1.0	1.0	mg/L	08/19/99	kso
EPA 300.0	Sulfate (SO4)	44	10	mg/L	08/19/99	kso
EPA 7470	Mercury (Hg), Diss.	<0.0002	0.0002	mg/L	08/19/99	pal
EPA 3510	Separatory Funnel Liq/Liq Extraction	Complete			08/19/99	bjl
EPA 6010B	Metals Analysis (ICAP)					
	Aluminum (Al), Diss.	<0.05	0.05	mg/L	08/20/99	chh
	Arsenic (As), Diss.	<0.02	0.02	mg/L	08/19/99	chh
	Barium (Ba), Diss.	6.16	0.01	mg/L	08/19/99	chh
	Boron (B), Diss.	0.47	0.05	mg/L	08/20/99	chh
	Cadmium (Cd), Diss.	<0.005	0.005	mg/L	08/19/99	chh
	Calcium (Ca), Diss.	407	0.5	mg/L	08/20/99	chh
	Chromium (Cr), Diss.	<0.01	0.01	mg/L	08/19/99	chh
	Cobalt (Co), Diss.	<0.02	0.02	mg/L	08/20/99	chh
	Copper (Cu), Diss.	<0.01	0.01	mg/L	08/19/99	chh
	Iron (Fe), Diss.	0.80	0.05	mg/L	08/20/99	chh
	Lead (Pb), Diss.	<0.05	0.05	mg/L	08/19/99	chh
	Magnesium (Mg), Diss.	151	0.1	mg/L	08/19/99	chh
	Manganese (Mn), Diss.	0.34	0.01	mg/L	08/19/99	chh
	Molybdenum (Mo), Diss.	<0.05	0.05	mg/L	08/25/99	pal
	Nickel (Ni), Diss.	<0.01	0.01	mg/L	08/25/99	pal
	Potassium (K), Diss.	13.1	0.5	mg/L	08/20/99	chh
	Selenium (Se), Diss.	<0.02	0.02	mg/L	08/19/99	chh
	Sodium (Na), Diss.	730	10	mg/L	08/23/99	pal
	Silver (Ag), Diss.	<0.01	0.01	mg/L	08/19/99	chh
	Zinc (Zn), Diss.	<0.01	0.01	mg/L	08/19/99	chh
EPA 8310	Polynuclear Aromatic Hydrocarbons-HPLC					
	Acenaphthene	ND	5.0	ug/L	08/21/99	rm
	Acenaphthylene	ND	5.0	ug/L	08/21/99	rm
	Anthracene	ND	1.0	ug/L	08/21/99	rm
	Benzo(b)fluoranthene	ND	0.10	ug/L	08/21/99	rm
	Benzo(k)fluoranthene	ND	0.10	ug/L	08/21/99	rm
	Benzo(a)anthracene	ND	0.10	ug/L	08/21/99	rm
	Benzo(a)pyrene	ND	0.10	ug/L	08/21/99	rm
	Benzo(ghi)perylene	ND	0.10	ug/L	08/21/99	rm
	Chrysene	ND	1.0	ug/L	08/21/99	rm
	Dibenzo(a,h)anthracene	ND	0.10	ug/L	08/21/99	rm
	Fluoranthene	ND	1.0	ug/L	08/21/99	rm

CORE LABORATORIES

LABORATORY TEST RESULTS

Job Number: 909264

Date: 08/26/99

CUSTOMER: Marathon Oil Company PROJECT: BERTHA BARBER ATTN: Mr. Paul Peacock

Customer Sample ID: MW-08
Date Sampled.....: 08/17/1999
Time Sampled.....: 12:15
Sample Matrix.....: Aqueous

Laboratory Sample ID: 909264-3
Date Received.....: 08/18/1999
Time Received.....: 10:53

TEST METHOD	PARAMETER/TEST DESCRIPTION	SAMPLE RESULT	REPORTING LIMIT	UNITS	DATE	TECH
	Fluorene	<1.0	1.0	ug/L	08/21/99	rm
	Indeno(1,2,3-cd)pyrene	ND	0.10	ug/L	08/21/99	rm
	Naphthalene	ND	5.0	ug/L	08/21/99	rm
	Phenanthrene	<1.0	1.0	ug/L	08/21/99	rm
	Pyrene	<1.0	1.0	ug/L	08/21/99	rm
EPA 8260B	Volatile Organic Compounds					
	Benzene	ND	5	ug/L	08/18/99	weh
	Ethylbenzene	ND	5	ug/L	08/18/99	weh
	Toluene	ND	5	ug/L	08/18/99	weh
	Xylenes (total)	ND	10	ug/L	08/18/99	weh

CORE LABORATORIES

LABORATORY TEST RESULTS

Job Number: 909264

Date: 08/26/99

CUSTOMER: Marathon Oil Company PROJECT: BERTHA BARBER ATTN: Mr. Paul Peacock

Customer Sample ID: MW-09
Date Sampled.....: 08/17/1999
Time Sampled.....: 12:50
Sample Matrix.....: Aqueous

Laboratory Sample ID: 909264-4
Date Received.....: 08/18/1999
Time Received.....: 10:53

TEST METHOD	PARAMETER/TEST DESCRIPTION	SAMPLE RESULT	REPORTING LIMIT	UNITS	DATE	TECH
EPA 160.1	Solids, Total Dissolved (TDS)	2300	10	mg/L	08/19/99	jaw
EPA 300.0	Chloride	1100	100	mg/L	08/19/99	kso
EPA 300.0	Fluoride (F)	<5.0	5.0	mg/L	08/19/99	kso
EPA 300.0	Nitrogen, Nitrate as N (NO3-N)	<1.0	1.0	mg/L	08/19/99	kso
EPA 300.0	Sulfate (SO4)	97	10	mg/L	08/19/99	kso
EPA 7470	Mercury (Hg), Diss.	<0.0002	0.0002	mg/L	08/19/99	pal
EPA 3510	Separatory Funnel Liq/Liq Extraction	Complete			08/19/99	bjl
EPA 6010B	Metals Analysis (ICAP)					
	Aluminum (Al), Diss.	<0.05	0.05	mg/L	08/20/99	chh
	Arsenic (As), Diss.	<0.02	0.02	mg/L	08/19/99	chh
	Barium (Ba), Diss.	0.21	0.01	mg/L	08/19/99	chh
	Boron (B), Diss.	0.40	0.05	mg/L	08/20/99	chh
	Cadmium (Cd), Diss.	<0.005	0.005	mg/L	08/19/99	chh
	Calcium (Ca), Diss.	319	0.5	mg/L	08/20/99	chh
	Chromium (Cr), Diss.	<0.01	0.01	mg/L	08/19/99	chh
	Cobalt (Co), Diss.	<0.02	0.02	mg/L	08/20/99	chh
	Copper (Cu), Diss.	<0.01	0.01	mg/L	08/19/99	chh
	Iron (Fe), Diss.	0.11	0.05	mg/L	08/20/99	chh
	Lead (Pb), Diss.	<0.05	0.05	mg/L	08/19/99	chh
	Magnesium (Mg), Diss.	104	0.1	mg/L	08/19/99	chh
	Manganese (Mn), Diss.	0.22	0.01	mg/L	08/19/99	chh
	Molybdenum (Mo), Diss.	<0.05	0.05	mg/L	08/25/99	pal
	Nickel (Ni), Diss.	<0.01	0.01	mg/L	08/25/99	pal
	Potassium (K), Diss.	8.4	0.5	mg/L	08/20/99	chh
	Selenium (Se), Diss.	<0.02	0.02	mg/L	08/19/99	chh
	Sodium (Na), Diss.	490	10	mg/L	08/23/99	pal
	Silver (Ag), Diss.	<0.01	0.01	mg/L	08/19/99	chh
	Zinc (Zn), Diss.	<0.01	0.01	mg/L	08/19/99	chh
EPA 8310	Polynuclear Aromatic Hydrocarbons-HPLC					
	Acenaphthene	ND	5.0	ug/L	08/21/99	rm
	Acenaphthylene	ND	5.0	ug/L	08/21/99	rm
	Anthracene	ND	1.0	ug/L	08/21/99	rm
	Benzo(b)fluoranthene	ND	0.10	ug/L	08/21/99	rm
	Benzo(k)fluoranthene	ND	0.10	ug/L	08/21/99	rm
	Benzo(a)anthracene	ND	0.10	ug/L	08/21/99	rm
	Benzo(a)pyrene	ND	0.10	ug/L	08/21/99	rm
	Benzo(ghi)perylene	ND	0.10	ug/L	08/21/99	rm
	Chrysene	ND	1.0	ug/L	08/21/99	rm
	Dibenzo(a,h)anthracene	ND	0.10	ug/L	08/21/99	rm
	Fluoranthene	ND	1.0	ug/L	08/21/99	rm

CORE LABORATORIES

LABORATORY TEST RESULTS

Job Number: 909264

Date: 08/26/99

CUSTOMER: Marathon Oil Company PROJECT: BERTHA BARBER ATTN: Mr. Paul Peacock

Customer Sample ID: MW-09
Date Sampled.....: 08/17/1999
Time Sampled.....: 12:50
Sample Matrix.....: Aqueous

Laboratory Sample ID: 909264-4
Date Received.....: 08/18/1999
Time Received.....: 10:53

TEST METHOD	PARAMETER/TEST DESCRIPTION	SAMPLE RESULT	REPORTING LIMIT	UNITS	DATE	TECH
	Fluorene	ND	1.0	ug/L	08/21/99	rm
	Indeno(1,2,3-cd)pyrene	ND	0.10	ug/L	08/21/99	rm
	Naphthalene	ND	5.0	ug/L	08/21/99	rm
	Phenanthrene	ND	1.0	ug/L	08/21/99	rm
	Pyrene	ND	1.0	ug/L	08/21/99	rm
EPA 8260B	Volatile Organic Compounds					
	Benzene	20	5	ug/L	08/18/99	weh
	Ethylbenzene	ND	5	ug/L	08/18/99	weh
	Toluene	ND	5	ug/L	08/18/99	weh
	Xylenes (total)	ND	10	ug/L	08/18/99	weh

CORE LABORATORIES

LABORATORY TEST RESULTS

Job Number: 909264

Date: 08/26/99

CUSTOMER: Marathon Oil Company PROJECT: BERTHA BARBER ATTN: Mr. Paul Peacock

Customer Sample ID: MW-10
Date Sampled.....: 08/17/1999
Time Sampled.....: 13:35
Sample Matrix.....: Aqueous

Laboratory Sample ID: 909264-5
Date Received.....: 08/18/1999
Time Received.....: 10:53

TEST METHOD	PARAMETER/TEST DESCRIPTION	SAMPLE RESULT	REPORTING LIMIT	UNITS	DATE	TECH
EPA 160.1	Solids, Total Dissolved (TDS)	4400	10	mg/L	08/19/99	jaw
EPA 300.0	Chloride	2370	100	mg/L	08/19/99	kso
EPA 300.0	Fluoride (F)	<5.0	5.0	mg/L	08/19/99	kso
EPA 300.0	Nitrogen, Nitrate as N (NO3-N)	<1.0	1.0	mg/L	08/19/99	kso
EPA 300.0	Sulfate (SO4)	184	10	mg/L	08/19/99	kso
EPA 7470	Mercury (Hg), Diss.	<0.0002	0.0002	mg/L	08/19/99	pal
EPA 3510	Separatory Funnel Liq/Liq Extraction	Complete			08/19/99	bjl
EPA 6010B	Metals Analysis (ICAP)					
	Aluminum (Al), Diss.	<0.05	0.05	mg/L	08/20/99	chh
	Arsenic (As), Diss.	0.02	0.02	mg/L	08/19/99	chh
	Barium (Ba), Diss.	0.14	0.01	mg/L	08/19/99	chh
	Boron (B), Diss.	0.44	0.05	mg/L	08/20/99	chh
	Cadmium (Cd), Diss.	<0.005	0.005	mg/L	08/19/99	chh
	Calcium (Ca), Diss.	575	0.5	mg/L	08/20/99	chh
	Chromium (Cr), Diss.	<0.01	0.01	mg/L	08/19/99	chh
	Cobalt (Co), Diss.	<0.02	0.02	mg/L	08/20/99	chh
	Copper (Cu), Diss.	<0.01	0.01	mg/L	08/19/99	chh
	Iron (Fe), Diss.	0.61	0.05	mg/L	08/20/99	chh
	Lead (Pb), Diss.	<0.05	0.05	mg/L	08/19/99	chh
	Magnesium (Mg), Diss.	149	0.1	mg/L	08/19/99	chh
	Manganese (Mn), Diss.	0.17	0.01	mg/L	08/19/99	chh
	Molybdenum (Mo), Diss.	<0.05	0.05	mg/L	08/25/99	pal
	Nickel (Ni), Diss.	0.04	0.01	mg/L	08/25/99	pal
	Potassium (K), Diss.	11.1	0.5	mg/L	08/20/99	chh
	Selenium (Se), Diss.	<0.02	0.02	mg/L	08/19/99	chh
	Sodium (Na), Diss.	880	10	mg/L	08/23/99	pal
	Silver (Ag), Diss.	<0.01	0.01	mg/L	08/19/99	chh
	Zinc (Zn), Diss.	<0.01	0.01	mg/L	08/19/99	chh
EPA 8310	Polynuclear Aromatic Hydrocarbons-HPLC					
	Acenaphthene	ND	5.0	ug/L	08/21/99	rm
	Acenaphthylene	ND	5.0	ug/L	08/21/99	rm
	Anthracene	ND	1.0	ug/L	08/21/99	rm
	Benzo(b)fluoranthene	ND	0.10	ug/L	08/21/99	rm
	Benzo(k)fluoranthene	ND	0.10	ug/L	08/21/99	rm
	Benzo(a)anthracene	ND	0.10	ug/L	08/21/99	rm
	Benzo(a)pyrene	ND	0.10	ug/L	08/21/99	rm
	Benzo(ghi)perylene	ND	0.10	ug/L	08/21/99	rm
	Chrysene	ND	1.0	ug/L	08/21/99	rm
	Dibenzo(a,h)anthracene	ND	0.10	ug/L	08/21/99	rm
	Fluoranthene	ND	1.0	ug/L	08/21/99	rm

CORE LABORATORIES

LABORATORY TEST RESULTS

Job Number: 909264

Date: 08/26/99

CUSTOMER: Marathon Oil Company PROJECT: BERTHA BARBER ATTN: Mr. Paul Peacock

Customer Sample ID: MW-10
Date Sampled.....: 08/17/1999
Time Sampled.....: 13:35
Sample Matrix.....: Aqueous

Laboratory Sample ID: 909264-5
Date Received.....: 08/18/1999
Time Received.....: 10:53

TEST METHOD	PARAMETER/TEST DESCRIPTION	SAMPLE RESULT	REPORTING LIMIT	UNITS	DATE	TECH
	Fluorene	ND	1.0	ug/L	08/21/99	rm
	Indeno(1,2,3-cd)pyrene	ND	0.10	ug/L	08/21/99	rm
	Naphthalene	<5.0	5.0	ug/L	08/21/99	rm
	Phenanthrene	ND	1.0	ug/L	08/21/99	rm
	Pyrene	ND	1.0	ug/L	08/21/99	rm
EPA 8260B	Volatile Organic Compounds					
	Benzene	12000	500	ug/L	08/19/99	weh
	Ethylbenzene	160	50	ug/L	08/19/99	weh
	Toluene	1700	50	ug/L	08/19/99	weh
	Xylenes (total)	400	100	ug/L	08/19/99	weh

CORE LABORATORIES

LABORATORY TEST RESULTS

Job Number: 909264

Date: 08/26/99

CUSTOMER: Marathon Oil Company PROJECT: BERTHA BARBER ATTN: Mr. Paul Peacock

Customer Sample ID: MW-11
Date Sampled.....: 08/17/1999
Time Sampled.....: 14:00
Sample Matrix.....: Aqueous

Laboratory Sample ID: 909264-6
Date Received.....: 08/18/1999
Time Received.....: 10:53

TEST METHOD	PARAMETER/TEST DESCRIPTION	SAMPLE RESULT	REPORTING LIMIT	UNITS	DATE	TECH
EPA 160.1	Solids, Total Dissolved (TDS)	2300	10	mg/L	08/19/99	jaw
EPA 300.0	Chloride	1020	100	mg/L	08/19/99	kso
EPA 300.0	Fluoride (F)	<5.0	5.0	mg/L	08/19/99	kso
EPA 300.0	Nitrogen, Nitrate as N (NO3-N)	<1.0	1.0	mg/L	08/19/99	kso
EPA 300.0	Sulfate (SO4)	354	10	mg/L	08/19/99	kso
EPA 7470	Mercury (Hg), Diss.	<0.0002	0.0002	mg/L	08/19/99	pal
EPA 3510	Separatory Funnel Liq/Liq Extraction	Complete			08/19/99	bjl
EPA 6010B	Metals Analysis (ICAP)					
	Aluminum (Al), Diss.	<0.05	0.05	mg/L	08/20/99	chh
	Arsenic (As), Diss.	<0.02	0.02	mg/L	08/19/99	chh
	Barium (Ba), Diss.	0.14	0.01	mg/L	08/19/99	chh
	Boron (B), Diss.	0.39	0.05	mg/L	08/20/99	chh
	Cadmium (Cd), Diss.	<0.005	0.005	mg/L	08/19/99	chh
	Calcium (Ca), Diss.	300	0.5	mg/L	08/20/99	chh
	Chromium (Cr), Diss.	<0.01	0.01	mg/L	08/19/99	chh
	Cobalt (Co), Diss.	<0.02	0.02	mg/L	08/20/99	chh
	Copper (Cu), Diss.	<0.01	0.01	mg/L	08/19/99	chh
	Iron (Fe), Diss.	<0.05	0.05	mg/L	08/20/99	chh
	Lead (Pb), Diss.	<0.05	0.05	mg/L	08/19/99	chh
	Magnesium (Mg), Diss.	84.6	0.1	mg/L	08/19/99	chh
	Manganese (Mn), Diss.	0.17	0.01	mg/L	08/19/99	chh
	Molybdenum (Mo), Diss.	<0.05	0.05	mg/L	08/25/99	pal
	Nickel (Ni), Diss.	<0.01	0.01	mg/L	08/25/99	pal
	Potassium (K), Diss.	9.5	0.5	mg/L	08/20/99	chh
	Selenium (Se), Diss.	<0.02	0.02	mg/L	08/19/99	chh
	Sodium (Na), Diss.	460	10	mg/L	08/23/99	pal
	Silver (Ag), Diss.	<0.01	0.01	mg/L	08/19/99	chh
	Zinc (Zn), Diss.	<0.01	0.01	mg/L	08/19/99	chh
EPA 8310	Polynuclear Aromatic Hydrocarbons-HPLC					
	Acenaphthene	ND	5.0	ug/L	08/21/99	rm
	Acenaphthylene	ND	5.0	ug/L	08/21/99	rm
	Anthracene	ND	1.0	ug/L	08/21/99	rm
	Benzo(b)fluoranthene	ND	0.10	ug/L	08/21/99	rm
	Benzo(k)fluoranthene	ND	0.10	ug/L	08/21/99	rm
	Benzo(a)anthracene	ND	0.10	ug/L	08/21/99	rm
	Benzo(a)pyrene	ND	0.10	ug/L	08/21/99	rm
	Benzo(ghi)perylene	ND	0.10	ug/L	08/21/99	rm
	Chrysene	ND	1.0	ug/L	08/21/99	rm
	Dibenzo(a,h)anthracene	ND	0.10	ug/L	08/21/99	rm
	Fluoranthene	ND	1.0	ug/L	08/21/99	rm

CORE LABORATORIES

LABORATORY TEST RESULTS

Job Number: 909264

Date: 08/26/99

CUSTOMER: Marathon Oil Company PROJECT: BERTHA BARBER ATTN: Mr. Paul Peacock

Customer Sample ID: MW-11
Date Sampled.....: 08/17/1999
Time Sampled.....: 14:00
Sample Matrix.....: Aqueous

Laboratory Sample ID: 909264-6
Date Received.....: 08/18/1999
Time Received.....: 10:53

TEST METHOD	PARAMETER/TEST DESCRIPTION	SAMPLE RESULT	REPORTING LIMIT	UNITS	DATE	TECH
	Fluorene	ND	1.0	ug/L	08/21/99	rm
	Indeno(1,2,3-cd)pyrene	ND	0.10	ug/L	08/21/99	rm
	Naphthalene	ND	5.0	ug/L	08/21/99	rm
	Phenanthrene	ND	1.0	ug/L	08/21/99	rm
	Pyrene	ND	1.0	ug/L	08/21/99	rm
EPA 8260B	Volatile Organic Compounds					
	Benzene	ND	5	ug/L	08/19/99	weh
	Ethylbenzene	ND	5	ug/L	08/19/99	weh
	Toluene	ND	5	ug/L	08/19/99	weh
	Xylenes (total)	ND	10	ug/L	08/19/99	weh

CORE LABORATORIES

LABORATORY TEST RESULTS

Job Number: 909264

Date: 08/26/99

CUSTOMER: Marathon Oil Company PROJECT: BERTHA BARBER ATTN: Mr. Paul Peacock

Customer Sample ID: PZ1
Date Sampled.....: 08/17/1999
Time Sampled.....: 14:30
Sample Matrix.....: Aqueous

Laboratory Sample ID: 909264-7
Date Received.....: 08/18/1999
Time Received.....: 10:53

TEST METHOD	PARAMETER/TEST DESCRIPTION	SAMPLE RESULT	REPORTING LIMIT	UNITS	DATE	TECH
EPA 160.1	Solids, Total Dissolved (TDS)	3500	10	mg/L	08/19/99	jaw
EPA 300.0	Chloride	1920	100	mg/L	08/19/99	kso
EPA 300.0	Fluoride (F)	<5.0	5.0	mg/L	08/19/99	kso
EPA 300.0	Nitrogen, Nitrate as N (NO3-N)	<1.0	1.0	mg/L	08/19/99	kso
EPA 300.0	Sulfate (SO4)	170	10	mg/L	08/19/99	kso
EPA 7470	Mercury (Hg), Diss.	<0.0002	0.0002	mg/L	08/19/99	pal
EPA 3510	Separatory Funnel Liq/Liq Extraction	Complete			08/19/99	bjl
EPA 6010B	Metals Analysis (ICAP)					
	Aluminum (Al), Diss.	<0.05	0.05	mg/L	08/20/99	chh
	Arsenic (As), Diss.	<0.02	0.02	mg/L	08/19/99	chh
	Barium (Ba), Diss.	0.16	0.01	mg/L	08/19/99	chh
	Boron (B), Diss.	0.38	0.05	mg/L	08/20/99	chh
	Cadmium (Cd), Diss.	<0.005	0.005	mg/L	08/19/99	chh
	Calcium (Ca), Diss.	339	0.5	mg/L	08/20/99	chh
	Chromium (Cr), Diss.	<0.01	0.01	mg/L	08/19/99	chh
	Cobalt (Co), Diss.	0.06	0.02	mg/L	08/20/99	chh
	Copper (Cu), Diss.	<0.01	0.01	mg/L	08/19/99	chh
	Iron (Fe), Diss.	<0.05	0.05	mg/L	08/20/99	chh
	Lead (Pb), Diss.	<0.05	0.05	mg/L	08/19/99	chh
	Magnesium (Mg), Diss.	143	0.1	mg/L	08/19/99	chh
	Manganese (Mn), Diss.	0.09	0.01	mg/L	08/19/99	chh
	Molybdenum (Mo), Diss.	<0.05	0.05	mg/L	08/25/99	pal
	Nickel (Ni), Diss.	0.06	0.01	mg/L	08/25/99	pal
	Potassium (K), Diss.	24.3	0.5	mg/L	08/20/99	chh
	Selenium (Se), Diss.	<0.02	0.02	mg/L	08/19/99	chh
	Sodium (Na), Diss.	860	10	mg/L	08/23/99	pal
	Silver (Ag), Diss.	<0.01	0.01	mg/L	08/19/99	chh
	Zinc (Zn), Diss.	<0.01	0.01	mg/L	08/19/99	chh
EPA 8310	Polynuclear Aromatic Hydrocarbons-HPLC					
	Acenaphthene	ND	5.0	ug/L	08/21/99	rm
	Acenaphthylene	ND	5.0	ug/L	08/21/99	rm
	Anthracene	ND	1.0	ug/L	08/21/99	rm
	Benzo(b)fluoranthene	ND	0.10	ug/L	08/21/99	rm
	Benzo(k)fluoranthene	ND	0.10	ug/L	08/21/99	rm
	Benzo(a)anthracene	ND	0.10	ug/L	08/21/99	rm
	Benzo(a)pyrene	ND	0.10	ug/L	08/21/99	rm
	Benzo(ghi)perylene	ND	0.10	ug/L	08/21/99	rm
	Chrysene	ND	1.0	ug/L	08/21/99	rm
	Dibenzo(a,h)anthracene	ND	0.10	ug/L	08/21/99	rm
	Fluoranthene	ND	1.0	ug/L	08/21/99	rm

CORE LABORATORIES

LABORATORY TEST RESULTS

Job Number: 909264

Date: 08/26/99

CUSTOMER: Marathon Oil Company PROJECT: BERTHA BARBER ATTN: Mr. Paul Peacock

Customer Sample ID: PZ1
Date Sampled.....: 08/17/1999
Time Sampled.....: 14:30
Sample Matrix.....: Aqueous

Laboratory Sample ID: 909264-7
Date Received.....: 08/18/1999
Time Received.....: 10:53

TEST METHOD	PARAMETER/TEST DESCRIPTION	SAMPLE RESULT	REPORTING LIMIT	UNITS	DATE	TECH
	Fluorene	ND	1.0	ug/L	08/21/99	rm
	Indeno(1,2,3-cd)pyrene	ND	0.10	ug/L	08/21/99	rm
	Naphthalene	ND	5.0	ug/L	08/21/99	rm
	Phenanthrene	ND	1.0	ug/L	08/21/99	rm
	Pyrene	ND	1.0	ug/L	08/21/99	rm
EPA 8260B	Volatile Organic Compounds					
	Benzene	ND	5	ug/L	08/18/99	weh
	Ethylbenzene	ND	5	ug/L	08/18/99	weh
	Toluene	ND	5	ug/L	08/18/99	weh
	Xylenes (total)	ND	10	ug/L	08/18/99	weh

CORELAB

CORE LABORATORIES

LABORATORY TEST RESULTS

Job Number: 909264

Date: 08/26/99

CUSTOMER: Marathon Oil Company PROJECT: BERTHA BARBER ATTN: Mr. Paul Peacock

Customer Sample ID: PZ2
Date Sampled.....: 08/17/1999
Time Sampled.....: 15:05
Sample Matrix.....: Aqueous

Laboratory Sample ID: 909264-8
Date Received.....: 08/18/1999
Time Received.....: 10:53

TEST METHOD	PARAMETER/TEST DESCRIPTION	SAMPLE RESULT	REPORTING LIMIT	UNITS	DATE	TECH
EPA 160.1	Solids, Total Dissolved (TDS)	7100	10	mg/L	08/19/99	jaw
EPA 300.0	Chloride	4160	100	mg/L	08/19/99	kso
EPA 300.0	Fluoride (F)	<5.0	5.0	mg/L	08/19/99	kso
EPA 300.0	Nitrogen, Nitrate as N (NO3-N)	<1.0	1.0	mg/L	08/19/99	kso
EPA 300.0	Sulfate (SO4)	303	10	mg/L	08/19/99	kso
EPA 7470	Mercury (Hg), Diss.	<0.0002	0.0002	mg/L	08/19/99	pal
EPA 3510	Separatory Funnel Liq/Liq Extraction	Complete			08/19/99	bjl
EPA 6010B	Metals Analysis (ICAP)					
	Aluminum (Al), Diss.	<0.05	0.05	mg/L	08/20/99	chh
	Arsenic (As), Diss.	<0.02	0.02	mg/L	08/19/99	chh
	Barium (Ba), Diss.	0.16	0.01	mg/L	08/19/99	chh
	Boron (B), Diss.	0.49	0.05	mg/L	08/20/99	chh
	Cadmium (Cd), Diss.	<0.005	0.005	mg/L	08/19/99	chh
	Calcium (Ca), Diss.	974	5	mg/L	08/26/99	pal
	Chromium (Cr), Diss.	<0.01	0.01	mg/L	08/19/99	chh
	Cobalt (Co), Diss.	<0.02	0.02	mg/L	08/20/99	chh
	Copper (Cu), Diss.	<0.01	0.01	mg/L	08/19/99	chh
	Iron (Fe), Diss.	0.11	0.05	mg/L	08/20/99	chh
	Lead (Pb), Diss.	<0.05	0.05	mg/L	08/19/99	chh
	Magnesium (Mg), Diss.	250	0.1	mg/L	08/19/99	chh
	Manganese (Mn), Diss.	0.13	0.01	mg/L	08/19/99	chh
	Molybdenum (Mo), Diss.	<0.05	0.05	mg/L	08/25/99	pal
	Nickel (Ni), Diss.	<0.01	0.01	mg/L	08/25/99	pal
	Potassium (K), Diss.	18.6	0.5	mg/L	08/20/99	chh
	Selenium (Se), Diss.	<0.02	0.02	mg/L	08/19/99	chh
	Sodium (Na), Diss.	1540	10	mg/L	08/23/99	pal
	Silver (Ag), Diss.	<0.01	0.01	mg/L	08/19/99	chh
	Zinc (Zn), Diss.	<0.01	0.01	mg/L	08/19/99	chh
EPA 8310	Polynuclear Aromatic Hydrocarbons-HPLC					
	Acenaphthene	ND	5.0	ug/L	08/21/99	rm
	Acenaphthylene	ND	5.0	ug/L	08/21/99	rm
	Anthracene	ND	1.0	ug/L	08/21/99	rm
	Benzo(b)fluoranthene	ND	0.10	ug/L	08/21/99	rm
	Benzo(k)fluoranthene	ND	0.10	ug/L	08/21/99	rm
	Benzo(a)anthracene	ND	0.10	ug/L	08/21/99	rm
	Benzo(a)pyrene	ND	0.10	ug/L	08/21/99	rm
	Benzo(ghi)perylene	ND	0.10	ug/L	08/21/99	rm
	Chrysene	ND	1.0	ug/L	08/21/99	rm
	Dibenzo(a,h)anthracene	ND	0.10	ug/L	08/21/99	rm
	Fluoranthene	ND	1.0	ug/L	08/21/99	rm

CORE LABORATORIES

LABORATORY TEST RESULTS

Job Number: 909264

Date: 08/26/99

CUSTOMER: Marathon Oil Company PROJECT: BERTHA BARBER ATTN: Mr. Paul Peacock

Customer Sample ID: PZ2
Date Sampled.....: 08/17/1999
Time Sampled.....: 15:05
Sample Matrix.....: Aqueous

Laboratory Sample ID: 909264-8
Date Received.....: 08/18/1999
Time Received.....: 10:53

TEST METHOD	PARAMETER/TEST DESCRIPTION	SAMPLE RESULT	REPORTING LIMIT	UNITS	DATE	TECH
	Fluorene	ND	1.0	ug/L	08/21/99	rm
	Indeno(1,2,3-cd)pyrene	ND	0.10	ug/L	08/21/99	rm
	Naphthalene	ND	5.0	ug/L	08/21/99	rm
	Phenanthrene	ND	1.0	ug/L	08/21/99	rm
	Pyrene	ND	1.0	ug/L	08/21/99	rm
EPA 8260B	Volatile Organic Compounds					
	Benzene	ND	5	ug/L	08/18/99	weh
	Ethylbenzene	ND	5	ug/L	08/18/99	weh
	Toluene	ND	5	ug/L	08/18/99	weh
	Xylenes (total)	ND	10	ug/L	08/18/99	weh

CORELAB

CORE LABORATORIES

LABORATORY TEST RESULTS

Job Number: 909264

Date: 08/26/99

CUSTOMER: Marathon Oil Company PROJECT: BERTHA BARBER ATTN: Mr. Paul Peacock

Customer Sample ID: PZ3
Date Sampled.....: 08/17/1999
Time Sampled.....: 15:40
Sample Matrix.....: Aqueous

Laboratory Sample ID: 909264-9
Date Received.....: 08/18/1999
Time Received.....: 10:53

TEST METHOD	PARAMETER/TEST DESCRIPTION	SAMPLE RESULT	REPORTING LIMIT	UNITS	DATE	TECH
EPA 160.1	Solids, Total Dissolved (TDS)	4100	10	mg/L	08/19/99	jaw
EPA 300.0	Chloride	2130	100	mg/L	08/19/99	kso
EPA 300.0	Fluoride (F)	<5.0	5.0	mg/L	08/19/99	kso
EPA 300.0	Nitrogen, Nitrate as N (NO3-N)	<1.0	1.0	mg/L	08/19/99	kso
EPA 300.0	Sulfate (SO4)	124	10	mg/L	08/19/99	kso
EPA 7470	Mercury (Hg), Diss.	<0.0002	0.0002	mg/L	08/19/99	pal
EPA 3510	Separatory Funnel Liq/Liq Extraction	Complete			08/19/99	bjl
EPA 6010B	Metals Analysis (ICAP)					
	Aluminum (Al), Diss.	<0.05	0.05	mg/L	08/20/99	chh
	Arsenic (As), Diss.	<0.02	0.02	mg/L	08/19/99	chh
	Barium (Ba), Diss.	0.20	0.01	mg/L	08/19/99	chh
	Boron (B), Diss.	0.47	0.05	mg/L	08/26/99	pal
	Cadmium (Cd), Diss.	<0.005	0.005	mg/L	08/19/99	chh
	Calcium (Ca), Diss.	524	0.5	mg/L	08/20/99	chh
	Chromium (Cr), Diss.	<0.01	0.01	mg/L	08/19/99	chh
	Cobalt (Co), Diss.	<0.02	0.02	mg/L	08/20/99	chh
	Copper (Cu), Diss.	<0.01	0.01	mg/L	08/19/99	chh
	Iron (Fe), Diss.	1.12	0.05	mg/L	08/20/99	chh
	Lead (Pb), Diss.	<0.05	0.05	mg/L	08/19/99	chh
	Magnesium (Mg), Diss.	148	0.1	mg/L	08/19/99	chh
	Manganese (Mn), Diss.	0.18	0.01	mg/L	08/19/99	chh
	Molybdenum (Mo), Diss.	<0.05	0.05	mg/L	08/25/99	pal
	Nickel (Ni), Diss.	<0.01	0.01	mg/L	08/25/99	pal
	Potassium (K), Diss.	12.8	0.5	mg/L	08/20/99	chh
	Selenium (Se), Diss.	<0.02	0.02	mg/L	08/19/99	chh
	Sodium (Na), Diss.	730	10	mg/L	08/23/99	pal
	Silver (Ag), Diss.	<0.01	0.01	mg/L	08/19/99	chh
	Zinc (Zn), Diss.	<0.01	0.01	mg/L	08/19/99	chh
EPA 8310	Polynuclear Aromatic Hydrocarbons-HPLC					
	Acenaphthene	ND	5.0	ug/L	08/21/99	rm
	Acenaphthylene	ND	5.0	ug/L	08/21/99	rm
	Anthracene	ND	1.0	ug/L	08/21/99	rm
	Benzo(b)fluoranthene	ND	0.10	ug/L	08/21/99	rm
	Benzo(k)fluoranthene	ND	0.10	ug/L	08/21/99	rm
	Benzo(a)anthracene	ND	0.10	ug/L	08/21/99	rm
	Benzo(a)pyrene	ND	0.10	ug/L	08/21/99	rm
	Benzo(ghi)perylene	ND	0.10	ug/L	08/21/99	rm
	Chrysene	ND	1.0	ug/L	08/21/99	rm
	Dibenzo(a,h)anthracene	ND	0.10	ug/L	08/21/99	rm
	Fluoranthene	ND	1.0	ug/L	08/21/99	rm

CORE LABORATORIES

LABORATORY TEST RESULTS

Job Number: 909264

Date: 08/26/99

CUSTOMER: Marathon Oil Company PROJECT: BERTHA BARBER ATTN: Mr. Paul Peacock

Customer Sample ID: PZ3
Date Sampled.....: 08/17/1999
Time Sampled.....: 15:40
Sample Matrix.....: Aqueous

Laboratory Sample ID: 909264-9
Date Received.....: 08/18/1999
Time Received.....: 10:53

TEST METHOD	PARAMETER/TEST DESCRIPTION	SAMPLE RESULT	REPORTING LIMIT	UNITS	DATE	TECH
	Fluorene	ND	1.0	ug/L	08/21/99	rm
	Indeno(1,2,3-cd)pyrene	ND	0.10	ug/L	08/21/99	rm
	Naphthalene	ND	5.0	ug/L	08/21/99	rm
	Phenanthrene	ND	1.0	ug/L	08/21/99	rm
	Pyrene	ND	1.0	ug/L	08/21/99	rm
EPA 8260B	Volatile Organic Compounds					
	Benzene	17	5	ug/L	08/18/99	weh
	Ethylbenzene	<5	5	ug/L	08/18/99	weh
	Toluene	ND	5	ug/L	08/18/99	weh
	Xylenes (total)	ND	10	ug/L	08/18/99	weh

CORE LABORATORIES

LABORATORY TEST RESULTS

Job Number: 909264

Date: 08/26/99

CUSTOMER: Marathon Oil Company PROJECT: BERTHA BARBER ATTN: Mr. Paul Peacock

Customer Sample ID: PZ4
Date Sampled.....: 08/17/1999
Time Sampled.....: 16:10
Sample Matrix.....: Aqueous

Laboratory Sample ID: 909264-10
Date Received.....: 08/18/1999
Time Received.....: 10:53

TEST METHOD	PARAMETER/TEST DESCRIPTION	SAMPLE RESULT	REPORTING LIMIT	UNITS	DATE	TECH
EPA 160.1	Solids, Total Dissolved (TDS)	5900	10	mg/L	08/19/99	jaw
EPA 300.0	Chloride	3220	100	mg/L	08/19/99	kso
EPA 300.0	Fluoride (F)	<5.0	5.0	mg/L	08/19/99	kso
EPA 300.0	Nitrogen, Nitrate as N (NO3-N)	<1.0	1.0	mg/L	08/19/99	kso
EPA 300.0	Sulfate (SO4)	233	10	mg/L	08/19/99	kso
EPA 7470	Mercury (Hg), Diss.	<0.0002	0.0002	mg/L	08/19/99	pal
EPA 3510	Separatory Funnel Liq/Liq Extraction	Complete			08/19/99	bjl
EPA 6010B	Metals Analysis (ICAP)					
	Aluminum (Al), Diss.	<0.05	0.05	mg/L	08/20/99	chh
	Arsenic (As), Diss.	<0.02	0.02	mg/L	08/19/99	chh
	Barium (Ba), Diss.	0.17	0.01	mg/L	08/19/99	chh
	Boron (B), Diss.	0.41	0.05	mg/L	08/26/99	pal
	Cadmium (Cd), Diss.	<0.005	0.005	mg/L	08/19/99	chh
	Calcium (Ca), Diss.	852	5	mg/L	08/26/99	pal
	Chromium (Cr), Diss.	<0.01	0.01	mg/L	08/19/99	chh
	Cobalt (Co), Diss.	<0.02	0.02	mg/L	08/20/99	chh
	Copper (Cu), Diss.	<0.01	0.01	mg/L	08/19/99	chh
	Iron (Fe), Diss.	<0.05	0.05	mg/L	08/20/99	chh
	Lead (Pb), Diss.	<0.05	0.05	mg/L	08/19/99	chh
	Magnesium (Mg), Diss.	203	0.1	mg/L	08/19/99	chh
	Manganese (Mn), Diss.	0.06	0.01	mg/L	08/19/99	chh
	Molybdenum (Mo), Diss.	<0.05	0.05	mg/L	08/25/99	pal
	Nickel (Ni), Diss.	<0.01	0.01	mg/L	08/25/99	pal
	Potassium (K), Diss.	16.1	0.5	mg/L	08/20/99	chh
	Selenium (Se), Diss.	<0.02	0.02	mg/L	08/19/99	chh
	Sodium (Na), Diss.	1070	10	mg/L	08/23/99	pal
	Silver (Ag), Diss.	<0.01	0.01	mg/L	08/19/99	chh
	Zinc (Zn), Diss.	<0.01	0.01	mg/L	08/19/99	chh
EPA 8310	Polynuclear Aromatic Hydrocarbons-HPLC					
	Acenaphthene	ND	5.0	ug/L	08/21/99	rm
	Acenaphthylene	ND	5.0	ug/L	08/21/99	rm
	Anthracene	ND	1.0	ug/L	08/21/99	rm
	Benzo(b)fluoranthene	ND	0.10	ug/L	08/21/99	rm
	Benzo(k)fluoranthene	ND	0.10	ug/L	08/21/99	rm
	Benzo(a)anthracene	ND	0.10	ug/L	08/21/99	rm
	Benzo(a)pyrene	ND	0.10	ug/L	08/21/99	rm
	Benzo(ghi)perylene	ND	0.10	ug/L	08/21/99	rm
	Chrysene	ND	1.0	ug/L	08/21/99	rm
	Dibenzo(a,h)anthracene	ND	0.10	ug/L	08/21/99	rm
	Fluoranthene	ND	1.0	ug/L	08/21/99	rm

CORE LABORATORIES

LABORATORY TEST RESULTS

Job Number: 909264

Date: 08/26/99

CUSTOMER: Marathon Oil Company PROJECT: BERTHA BARBER ATTN: Mr. Paul Peacock

Customer Sample ID: PZ4
Date Sampled.....: 08/17/1999
Time Sampled.....: 16:10
Sample Matrix.....: Aqueous

Laboratory Sample ID: 909264-10
Date Received.....: 08/18/1999
Time Received.....: 10:53

TEST METHOD	PARAMETER/TEST DESCRIPTION	SAMPLE RESULT	REPORTING LIMIT	UNITS	DATE	TECH
	Fluorene	ND	1.0	ug/L	08/21/99	rm
	Indeno(1,2,3-cd)pyrene	ND	0.10	ug/L	08/21/99	rm
	Naphthalene	ND	5.0	ug/L	08/21/99	rm
	Phenanthrene	ND	1.0	ug/L	08/21/99	rm
	Pyrene	ND	1.0	ug/L	08/21/99	rm
EPA 8260B	Volatile Organic Compounds					
	Benzene	ND	5	ug/L	08/18/99	weh
	Ethylbenzene	ND	5	ug/L	08/18/99	weh
	Toluene	ND	5	ug/L	08/18/99	weh
	Xylenes (total)	ND	10	ug/L	08/18/99	weh

CORE LABORATORIES

QUALITY CONTROL RESULTS

Job Number.: 909264

Report Date.: 08/26/99

CUSTOMER: Marathon Oil Company PROJECT: MOC - Bertha Barber ATTN: Mr. Paul Peacock

Test Method.....: EPA 300.0
Method Description.: Ion Chromatography Analysis
Parameter.....: Chloride
Batch.....: 45120
Units.....: mg/L
Analyst...: kso

QC	Lab ID	Reagent	QC Result	QC Result	True Value	Orig. Value	Calc. Result	*	Limits	Date	Time
ICV		V19923A	9.830		10		98.3	%	85-115	08/19/1999	1111
ICB			0.212							08/19/1999	1127
MD	909104-1		2.0462			2.0072	0.0390	A	1.0000	08/19/1999	1158
MS	909104-1	V19922E	12.1999		10.000000	1.80648	103.9	%	75-125	08/19/1999	1213
CCV		V19923A	9.595		10		96.0	%	85-115	08/19/1999	1418
CCB			0.273							08/19/1999	1434
CCV		V19923A	9.538		10		95.4	%	85-115	08/19/1999	1726
CCB			0.206							08/19/1999	1742
CCV		V19923A	9.348		10		93.5	%	85-115	08/19/1999	2033
CCB			0.211							08/19/1999	2049

Test Method.....: EPA 300.0
Method Description.: Ion Chromatography Analysis
Parameter.....: Fluoride (F)
Batch.....: 45120
Units.....: mg/L
Analyst...: kso

QC	Lab ID	Reagent	QC Result	QC Result	True Value	Orig. Value	Calc. Result	*	Limits	Date	Time
ICV		V19923A	1.090		1		109.0	%	85-115	08/19/1999	1111
ICB			0.000							08/19/1999	1127
MD	909104-1		0.0257			0.0169	0.0088	A	0.5000	08/19/1999	1158
MS	909104-1	V19922E	1.0987		1.000000	0.01521	108.3	%	75-125	08/19/1999	1213
CCV		V19923A	1.093		1		109.3	%	85-115	08/19/1999	1418
CCB			0.000							08/19/1999	1434
CCV		V19923A	1.103		1		110.3	%	85-115	08/19/1999	1726
CCB			0.000							08/19/1999	1742

Test Method.....: EPA 300.0
Method Description.: Ion Chromatography Analysis
Parameter.....: Nitrogen, Nitrate as N (NO3-N)
Batch.....: 45120
Units.....: mg/L
Analyst...: kso

QC	Lab ID	Reagent	QC Result	QC Result	True Value	Orig. Value	Calc. Result	*	Limits	Date	Time
ICV		V19923A	0.988		1		98.8	%	85-115	08/19/1999	1111
ICB			0.009							08/19/1999	1127
MD	909104-1		0.0272			0.0346	0.0074	A	0.1000	08/19/1999	1158
MS	909104-1	V19922E	1.0156		1.000000	0.03114	98.4	%	75-125	08/19/1999	1213
CCV		V19923A	0.973		1		97.3	%	85-115	08/19/1999	1418
CCB			0.000							08/19/1999	1434
CCV		V19923A	0.953		1		95.3	%	85-115	08/19/1999	1726
CCB			0.009							08/19/1999	1742

Test Method.....: EPA 160.1
Method Description.: Solids, Total Dissolved (TDS)
Parameter.....: Solids, Total Dissolved (TDS)
Batch.....: 45156
Units.....: mg/L
Analyst...: jaw

QC	Lab ID	Reagent	QC Result	QC Result	True Value	Orig. Value	Calc. Result	*	Limits	Date	Time
MB			-6							08/19/1999	0800
LCS		V19924C	9857		10000		98.6	%	80-120	08/19/1999	0816
MD	907643-8		417			413	1.0	R	20	08/19/1999	0847

* %=% REC, R=RPD, A=ABS Diff., D=% Diff.

CORE LABORATORIES

QUALITY CONTROL RESULTS

Job Number.: 909264 | Report Date.: 08/26/99

CUSTOMER: Marathon Oil Company | PROJECT: MOC - Bertha Barber | ATTN: Mr. Paul Peacock

Test Method.....: EPA 160.1 | Batch.....: 45156 | Analyst...: jaw
Method Description.: Solids, Total Dissolved (TDS) | Units.....: mg/L
Parameter.....: Solids, Total Dissolved (TDS)

QC	Lab ID	Reagent	QC Result	QC Result	True Value	Orig. Value	Calc. Result	*	Limits	Date	Time
MS	907643-8	V19924C	918		500.000000	413	101.0	%	75-125	08/19/1999	1139

Test Method.....: EPA 300.0 | Batch.....: 45120 | Analyst...: kso
Method Description.: Ion Chromatography Analysis | Units.....: mg/L
Parameter.....: Sulfate (SO4)

QC	Lab ID	Reagent	QC Result	QC Result	True Value	Orig. Value	Calc. Result	*	Limits	Date	Time
ICV		V19923A	21.460		20		107.3	%	85-115	08/19/1999	1111
ICB			0.552							08/19/1999	1127
MD	909104-1		9.2755			9.5233	2.6	R	20	08/19/1999	1158
MS	909104-1	V19922E	30.1839		20.000000	8.57097	108.1	%	75-125	08/19/1999	1213
CCV		V19923A	21.557		20		107.8	%	85-115	08/19/1999	1418
CCB			0.525							08/19/1999	1434
CCV		V19923A	21.054		20		105.3	%	85-115	08/19/1999	1726
CCB			0.500							08/19/1999	1742

Test Method.....: EPA 6010B | Batch.....: 45159 | Analyst...: chh
Method Description.: Metals Analysis (ICAP) | Units.....: mg/L
Parameter.....: Aluminum (Al)

QC	Lab ID	Reagent	QC Result	QC Result	True Value	Orig. Value	Calc. Result	*	Limits	Date	Time
CAL		ICPCALBLK	0.00959		0.00					08/20/1999	0902
CAL		ICPCALSTD	1.89540		10.0					08/20/1999	0906
ICV		V170639F	1.93059		2.00		96.5	%	90-110	08/20/1999	0921
ICB			-0.01325							08/20/1999	0927
ISB		V170640F	485.33465		500.0		97.1	%	80-120	08/20/1999	0931
CCV		V170639F	1.90028		2.00		95.0	%	90-110	08/20/1999	1008
CCB			-0.02069							08/20/1999	1013
MD	909264-1		0.10013			0.11656	0.01643	A	0.10000	08/20/1999	1026
MS	909264-1	ICPSPK99A	1.05865		1.000	0.11656	94.2	%	75-125	08/20/1999	1031
CCV		V170639F	1.89475		2.00		94.7	%	90-110	08/20/1999	1113
CCB			0.00051							08/20/1999	1118
ISB		V170640F	480.49676		500.0		96.1	%	80-120	08/20/1999	1134
CCV		V170639F	1.83912		2.00		92.0	%	90-110	08/20/1999	1143
CCB			-0.00318							08/20/1999	1148

Test Method.....: EPA 6010B | Batch.....: 45092 | Analyst...: chh
Method Description.: Metals Analysis (ICAP) | Units.....: mg/L
Parameter.....: Arsenic (As)

QC	Lab ID	Reagent	QC Result	QC Result	True Value	Orig. Value	Calc. Result	*	Limits	Date	Time
CCV		V170638F	3.69345		4.00		92.3	%	90-110	08/19/1999	1328
CCB			0.00158							08/19/1999	1334
MD	909264-1		0.00434			0.00493	0.00059	A	0.02000	08/19/1999	1348
MS	909264-1	V16006105	1.14038		1.000000	0.00493	113.5	%	75-125	08/19/1999	1353
CCV		V170638F	3.71506		4.00		92.9	%	90-110	08/19/1999	1421
CCB			-0.00018							08/19/1999	1426

* %=% REC, R=RPD, A=ABS Diff., D=% Diff.

CORE LABORATORIES

QUALITY CONTROL RESULTS

Job Number.: 909264 | Report Date.: 08/26/99

CUSTOMER: Marathon Oil Company | PROJECT: MOC - Bertha Barber | ATTN: Mr. Paul Peacock

Test Method.....: EPA 6010B
Method Description.: Metals Analysis (ICAP)
Parameter.....: Arsenic (As)
Batch.....: 45092
Units.....: mg/L
Analyst...: chh

QC	Lab ID	Reagent	QC Result	QC Result	True Value	Orig. Value	Calc. Result	*	Limits	Date	Time
CCV		V170638F	3.76845		4.00		94.2	%	90-110	08/19/1999	1509
CCB			0.00206							08/19/1999	1515

Test Method.....: EPA 6010B
Method Description.: Metals Analysis (ICAP)
Parameter.....: Barium (Ba)
Batch.....: 45092
Units.....: mg/L
Analyst...: chh

QC	Lab ID	Reagent	QC Result	QC Result	True Value	Orig. Value	Calc. Result	*	Limits	Date	Time
ISB		V170640F	0.45403		0.50		90.8	%	80-120	08/19/1999	1321
CCV		V170638F	3.84054		4.00		96.0	%	90-110	08/19/1999	1328
CCB			0.00202							08/19/1999	1334
MD	909264-1		0.14004			0.13803	1.4	R	20	08/19/1999	1348
MS	909264-1	V16006105	1.28777		1.000000	0.13803	115.0	%	75-125	08/19/1999	1353
CCV		V170638F	3.91450		4.00		97.9	%	90-110	08/19/1999	1421
CCB			0.00028							08/19/1999	1426
ISB		V170640F	0.46464		0.50		92.9	%	80-120	08/19/1999	1500
CCV		V170638F	3.96942		4.00		99.2	%	90-110	08/19/1999	1509
CCB			0.00007							08/19/1999	1515

Test Method.....: EPA 6010B
Method Description.: Metals Analysis (ICAP)
Parameter.....: Boron (B)
Batch.....: 45159
Units.....: mg/L
Analyst...: chh

QC	Lab ID	Reagent	QC Result	QC Result	True Value	Orig. Value	Calc. Result	*	Limits	Date	Time
CAL		ICPCALBLK	0.26969							08/20/1999	0902
CAL		ICPCALSTD	1.41210		2.00					08/20/1999	0909
ICV		V170639F	1.98949		2.00		99.5	%	90-110	08/20/1999	0921
ICB			0.00892							08/20/1999	0927
CCV		V170639F	2.01085		2.00		100.5	%	90-110	08/20/1999	1008
CCB			0.02188							08/20/1999	1013
MD	909264-1		0.39250			0.39215	0.1	R	20	08/20/1999	1026
MS	909264-1	ICPSPK99A	0.85941		0.5000	0.39215	93.5	%	75-125	08/20/1999	1031
CCV		V170639F	2.02555		2.00		101.3	%	90-110	08/20/1999	1113
CCB			0.04254							08/20/1999	1118

Test Method.....: EPA 6010B
Method Description.: Metals Analysis (ICAP)
Parameter.....: Boron (B)
Batch.....: 45430
Units.....: mg/L
Analyst...: pal

QC	Lab ID	Reagent	QC Result	QC Result	True Value	Orig. Value	Calc. Result	*	Limits	Date	Time
CAL		ICPCALBLK	0.26010							08/26/1999	0823
CAL		ICPCALSTD	1.33190		2.00					08/26/1999	0916
ICV		V170639F	2.03601		2.00		101.8	%	90-110	08/26/1999	0918
ICB			0.02388							08/26/1999	0924
MD	909270-2		0.33383			0.33793	1.2	R	20	08/26/1999	1006
MS	909270-2	V16004408	5.22448		5.000000	0.33793	97.7	%	75-125	08/26/1999	1011
CCV		V170639F	1.96790		2.00		98.4	%	90-110	08/26/1999	1054

* %=% REC, R=RPD, A=ABS Diff., D=% Diff.

CORE LABORATORIES

QUALITY CONTROL RESULTS

Job Number.: 909264 Report Date.: 08/26/99

CUSTOMER: Marathon Oil Company PROJECT: MOC - Bertha Barber ATTN: Mr. Paul Peacock

Test Method.....: EPA 6010B Batch.....: 45430 Analyst...: pal
Method Description.: Metals Analysis (ICAP) Units.....: mg/L
Parameter.....: Boron (B)

QC	Lab ID	Reagent	QC Result	QC Result	True Value	Orig. Value	Calc. Result	*	Limits	Date	Time
CCB			0.04049							08/26/1999	1059
CCV		V170639F	2.05579		2.00		102.8	%	90-110	08/26/1999	1219
CCB			0.04907							08/26/1999	1224

Test Method.....: EPA 6010B Batch.....: 45092 Analyst...: chh
Method Description.: Metals Analysis (ICAP) Units.....: mg/L
Parameter.....: Cadmium (Cd)

QC	Lab ID	Reagent	QC Result	QC Result	True Value	Orig. Value	Calc. Result	*	Limits	Date	Time
ISB		V170640F	0.86617		1.00		86.6	%	80-120	08/19/1999	1321
CCV		V170638F	0.40292		0.40		100.7	%	90-110	08/19/1999	1328
CCB			-0.00005							08/19/1999	1334
MD	909264-1		-0.00003			0.00036	0.00039	A	0.00500	08/19/1999	1348
MS	909264-1	V16006105	0.11094		0.100000	0.00036	110.6	%	75-125	08/19/1999	1353
CCV		V170638F	0.40250		0.40		100.6	%	90-110	08/19/1999	1421
CCB			-0.00014							08/19/1999	1426
ISB		V170640F	0.87444		1.00		87.4	%	80-120	08/19/1999	1500
CCV		V170638F	0.41178		0.40		102.9	%	90-110	08/19/1999	1509
CCB			-0.00008							08/19/1999	1515

Test Method.....: EPA 6010B Batch.....: 45159 Analyst...: chh
Method Description.: Metals Analysis (ICAP) Units.....: mg/L
Parameter.....: Calcium (Ca)

QC	Lab ID	Reagent	QC Result	QC Result	True Value	Orig. Value	Calc. Result	*	Limits	Date	Time
CAL		ICPCALBLK	0.00410		0.00					08/20/1999	0902
CAL		ICPCALSTD	24.69709		50.00					08/20/1999	0906
ICV		V170639F	1.99894		2.00		99.9	%	90-110	08/20/1999	0921
ICB			0.00404							08/20/1999	0927
ISB		V170640F	462.77264		500.0		92.6	%	80-120	08/20/1999	0931
CCV		V170639F	2.01413		2.00		100.7	%	90-110	08/20/1999	1008
CCB			0.01012							08/20/1999	1013
MD	909264-1		576.81933			572.95629	0.7	R	20	08/20/1999	1026
MS	909264-1	ICPSPK99A	580.92150		50.000	572.95629	15.9	%	75-125	08/20/1999	1031
CCV		V170639F	2.05382		2.00		102.7	%	90-110	08/20/1999	1113
CCB			0.01640							08/20/1999	1118
ISB		V170640F	472.33630		500.0		94.5	%	80-120	08/20/1999	1134
CCV		V170639F	2.20123		2.00		110.1	%	90-110	08/20/1999	1143
CCB			0.02693							08/20/1999	1148

* %=% REC, R=RPD, A=ABS Diff., D=% Diff.

CORE LABORATORIES

QUALITY CONTROL RESULTS

Job Number.: 909264 | Report Date.: 08/26/99

CUSTOMER: Marathon Oil Company | PROJECT: MOC - Bertha Barber | ATTN: Mr. Paul Peacock

Test Method.....: EPA 6010B
Method Description.: Metals Analysis (ICAP)
Parameter.....: Calcium (Ca)
Batch.....: 45430
Units.....: mg/L
Analyst...: pal

QC	Lab ID	Reagent	QC Result	QC Result	True Value	Orig. Value	Calc. Result	*	Limits	Date	Time
CAL		ICPCALBLK	0.00980		0.00					08/26/1999	0823
CAL		ICPCALSTD	22.50230		50.00					08/26/1999	0828
ICV		V170639F	2.10247		2.00		105.1	%	90-110	08/26/1999	0918
ICB			-0.00577							08/26/1999	0924
ISB		V170640F	499.48556		500.0		99.9	%	80-120	08/26/1999	0928
MD	909270-2		-0.00088			0.00889	0.00977	A	0.50000	08/26/1999	1006
MS	909270-2	V16004408	54.67021		50.000000	0.00889	109.3	%	75-125	08/26/1999	1011
ISB		V170640F	488.17779		500.0		97.6	%	80-120	08/26/1999	1044
CCV		V170639F	2.03890		2.00		101.9	%	90-110	08/26/1999	1054
CCB			-0.00333							08/26/1999	1059
ISB		V170640F	480.40301		500.0		96.1	%	80-120	08/26/1999	1209
CCV		V170639F	2.09981		2.00		105.0	%	90-110	08/26/1999	1219
CCB			-0.00200							08/26/1999	1224

Test Method.....: EPA 6010B
Method Description.: Metals Analysis (ICAP)
Parameter.....: Chromium (Cr)
Batch.....: 45092
Units.....: mg/L
Analyst...: chh

QC	Lab ID	Reagent	QC Result	QC Result	True Value	Orig. Value	Calc. Result	*	Limits	Date	Time
ISB		V170640F	0.43752		0.50		87.5	%	80-120	08/19/1999	1321
CCV		V170638F	0.38957		0.40		97.4	%	90-110	08/19/1999	1328
CCB			-0.00383							08/19/1999	1334
MD	909264-1		-0.00262			-0.00415	0.00153	A	0.01000	08/19/1999	1348
MS	909264-1	V16006105	0.10871		0.100000	-0.00415	112.9	%	75-125	08/19/1999	1353
CCV		V170638F	0.39334		0.40		98.3	%	90-110	08/19/1999	1421
CCB			-0.00328							08/19/1999	1426
ISB		V170640F	0.44310		0.50		88.6	%	80-120	08/19/1999	1500
CCV		V170638F	0.40176		0.40		100.4	%	90-110	08/19/1999	1509
CCB			-0.00348							08/19/1999	1515

Test Method.....: EPA 6010B
Method Description.: Metals Analysis (ICAP)
Parameter.....: Cobalt (Co)
Batch.....: 45159
Units.....: mg/L
Analyst...: chh

QC	Lab ID	Reagent	QC Result	QC Result	True Value	Orig. Value	Calc. Result	*	Limits	Date	Time
CAL		ICPCALBLK	0.00050		0.00					08/20/1999	0902
CAL		ICPCALSTD	0.51259		1.00					08/20/1999	0913
ICV		V170639F	2.00161		2.00		100.1	%	90-110	08/20/1999	0921
ICB			-0.00644							08/20/1999	0927
ISB		V170640F	0.43619		0.50		87.2	%	80-120	08/20/1999	0931
CCV		V170639F	2.02484		2.00		101.2	%	90-110	08/20/1999	1008
CCB			0.00331							08/20/1999	1013
MD	909264-1		0.00175			-0.00234	0.00409	A	0.03000	08/20/1999	1026
MS	909264-1	ICPSPK99A	0.48414		0.5000	-0.00234	97.3	%	75-125	08/20/1999	1031
CCV		V170639F	2.07481		2.00		103.7	%	90-110	08/20/1999	1113
CCB			0.00038							08/20/1999	1118
ISB		V170640F	0.46157		0.50		92.3	%	80-120	08/20/1999	1134
CCV		V170639F	2.07111		2.00		103.6	%	90-110	08/20/1999	1143
CCB			-0.00449							08/20/1999	1148

* %=% REC, R=RPD, A=ABS Diff., D=% Diff.

CORE LABORATORIES

QUALITY CONTROL RESULTS

Job Number.: 909264

Report Date.: 08/26/99

CUSTOMER: Marathon Oil Company PROJECT: MOC - Bertha Barber ATTN: Mr. Paul Peacock

Test Method.....: EPA 6010B
Method Description.: Metals Analysis (ICAP)
Parameter.....: Copper (Cu)

Batch.....: 45092
Units.....: mg/L

Analyst...: chh

QC	Lab ID	Reagent	QC Result	QC Result	True Value	Orig. Value	Calc. Result	*	Limits	Date	Time
ISB		V170640F	0.46637		0.50		93.3	%	80-120	08/19/1999	1321
CCV		V170638F	0.93111		1.0		93.1	%	90-110	08/19/1999	1328
CCB			-0.00230							08/19/1999	1334
MD	909264-1		0.00040			-0.00015	0.00055	A	0.01000	08/19/1999	1348
MS	909264-1	V16006105	0.30609		0.250000	-0.00015	122.5	%	75-125	08/19/1999	1353
CCV		V170638F	0.95738		1.0		95.7	%	90-110	08/19/1999	1421
CCB			-0.00187							08/19/1999	1426
ISB		V170640F	0.48407		0.50		96.8	%	80-120	08/19/1999	1500
CCV		V170638F	0.96977		1.0		97.0	%	90-110	08/19/1999	1509
CCB			-0.00143							08/19/1999	1515

Test Method.....: EPA 6010B
Method Description.: Metals Analysis (ICAP)
Parameter.....: Iron (Fe)

Batch.....: 45159
Units.....: mg/L

Analyst...: chh

QC	Lab ID	Reagent	QC Result	QC Result	True Value	Orig. Value	Calc. Result	*	Limits	Date	Time
CAL		ICPCALBLK	0.02859		0.00					08/20/1999	0902
CAL		ICPCALSTD	69.00149		100.00					08/20/1999	0913
ICV		V170639F	1.98187		2.00		99.1	%	90-110	08/20/1999	0921
ICB			-0.02203							08/20/1999	0927
ISB		V170640F	180.04661		200.0		90.0	%	80-120	08/20/1999	0931
CCV		V170639F	2.00787		2.00		100.4	%	90-110	08/20/1999	1008
CCB			-0.01116							08/20/1999	1013
MD	909264-1		0.01667			0.02131	0.00464	A	0.05000	08/20/1999	1026
MS	909264-1	ICPSPK99A	0.41067		0.5000	0.02131	77.9	%	75-125	08/20/1999	1031
CCV		V170639F	2.02970		2.00		101.5	%	90-110	08/20/1999	1113
CCB			-0.02261							08/20/1999	1118
ISB		V170640F	183.33859		200.0		91.7	%	80-120	08/20/1999	1134
CCV		V170639F	2.01809		2.00		100.9	%	90-110	08/20/1999	1143
CCB			-0.01841							08/20/1999	1148

Test Method.....: EPA 6010B
Method Description.: Metals Analysis (ICAP)
Parameter.....: Lead (Pb)

Batch.....: 45092
Units.....: mg/L

Analyst...: chh

QC	Lab ID	Reagent	QC Result	QC Result	True Value	Orig. Value	Calc. Result	*	Limits	Date	Time
ISB		V170640F	0.87456		1.00		87.5	%	80-120	08/19/1999	1321
CCV		V170638F	3.94145		4.00		98.5	%	90-110	08/19/1999	1328
CCB			-0.00167							08/19/1999	1334
MD	909264-1		-0.01325			-0.00530	0.00795	A	0.05000	08/19/1999	1348
MS	909264-1	V16006105	1.04800		1.000000	-0.00530	105.3	%	75-125	08/19/1999	1353
CCV		V170638F	3.86980		4.00		96.7	%	90-110	08/19/1999	1421
CCB			-0.00000							08/19/1999	1426
ISB		V170640F	0.86078		1.00		86.1	%	80-120	08/19/1999	1500
CCV		V170638F	3.96175		4.00		99.0	%	90-110	08/19/1999	1509
CCB			-0.00313							08/19/1999	1515

* %=% REC, R=RPD, A=ABS Diff., D=% Diff.

CORE LABORATORIES

QUALITY CONTROL RESULTS

Job Number.: 909264

Report Date.: 08/26/99

CUSTOMER: Marathon Oil Company PROJECT: MOC - Bertha Barber ATTN: Mr. Paul Peacock

Test Method.....: EPA 6010B
Method Description.: Metals Analysis (ICAP)
Parameter.....: Magnesium (Mg)

Batch.....: 45092
Units.....: mg/L

Analyst...: chh

QC	Lab ID	Reagent	QC Result	QC Result	True Value	Orig. Value	Calc. Result	*	Limits	Date	Time
ISB		V170640F	447.29241		500.0		89.5	%	80-120	08/19/1999	1321
CCV		V170638F	3.84938		4.00		96.2	%	90-110	08/19/1999	1328
CCB			-0.01933							08/19/1999	1334
MD	909264-1		118.76293			114.73051	3.5	R	20	08/19/1999	1348
MS	909264-1	V16006105	115.77108		1.000000	114.73051	104.1	%	75-125	08/19/1999	1353
CCV		V170638F	3.84063		4.00		96.0	%	90-110	08/19/1999	1421
CCB			-0.01565							08/19/1999	1426
ISB		V170640F	444.51611		500.0		88.9	%	80-120	08/19/1999	1500
CCV		V170638F	3.90328		4.00		97.6	%	90-110	08/19/1999	1509
CCB			-0.00966							08/19/1999	1515

Test Method.....: EPA 6010B
Method Description.: Metals Analysis (ICAP)
Parameter.....: Manganese (Mn)

Batch.....: 45092
Units.....: mg/L

Analyst...: chh

QC	Lab ID	Reagent	QC Result	QC Result	True Value	Orig. Value	Calc. Result	*	Limits	Date	Time
ISB		V170640F	0.45798		0.50		91.6	%	80-120	08/19/1999	1321
CCV		V170638F	0.61130		0.60		101.9	%	90-110	08/19/1999	1328
CCB			-0.00077							08/19/1999	1334
MD	909264-1		0.21948			0.21442	2.3	R	20	08/19/1999	1348
MS	909264-1	V16006105	0.38591		0.150000	0.21442	114.3	%	75-125	08/19/1999	1353
CCV		V170638F	0.61155		0.60		101.9	%	90-110	08/19/1999	1421
CCB			-0.00077							08/19/1999	1426
ISB		V170640F	0.45984		0.50		92.0	%	80-120	08/19/1999	1500
CCV		V170638F	0.62160		0.60		103.6	%	90-110	08/19/1999	1509
CCB			-0.00077							08/19/1999	1515

Test Method.....: EPA 7470
Method Description.: Mercury, Total
Parameter.....: Mercury (Hg)

Batch.....: 45084
Units.....: mg/L

Analyst...: pal

QC	Lab ID	Reagent	QC Result	QC Result	True Value	Orig. Value	Calc. Result	*	Limits	Date	Time
CAL		HGCALBLK	4394		0.000					08/19/1999	0851
CAL		V170626C	19484		0.000050					08/19/1999	0855
CAL		V170626C	33437		0.000200					08/19/1999	0858
CAL		V170626C	89960		0.001000					08/19/1999	0902
CAL		V170626C	419010		0.005000					08/19/1999	0906
CAL		V170626C	794541		0.010000					08/19/1999	0910
ICV		V170626D	0.00455		0.005000		91.0	%	90-110	08/19/1999	0913
ICB			-0.000067							08/19/1999	0917
PB			-0.000102							08/19/1999	0921
LCS		V170626D	0.00468		0.005000		93.6	%	80-120	08/19/1999	0924
MD	907643-1		0.00323			0.00327	0.00004	A	0.00100	08/19/1999	0932
MS	907643-1	V170626C	0.00670		0.005000	0.00327	68.6	%	75-125	08/19/1999	0936
CCV		V170626C	0.00512		0.005000		102.4	%	90-110	08/19/1999	0958
CCB			-0.000122							08/19/1999	1002
CCV		V170626C	0.00510		0.005000		102.0	%	90-110	08/19/1999	1043
CCB			0.000055							08/19/1999	1046
CCV		V170626C	0.00528		0.005000		105.6	%	90-110	08/19/1999	1341

* %=% REC, R=RPD, A=ABS Diff., D=% Diff.

CORE LABORATORIES

QUALITY CONTROL RESULTS

Job Number.: 909264 | Report Date.: 08/26/99

CUSTOMER: Marathon Oil Company | PROJECT: MOC - Bertha Barber | ATTN: Mr. Paul Peacock

Test Method.....: EPA 7470 | Batch.....: 45084 | Analyst...: pal
Method Description.: Mercury, Total | Units.....: mg/L
Parameter.....: Mercury (Hg)

QC	Lab ID	Reagent	QC Result	QC Result	True Value	Orig. Value	Calc. Result	*	Limits	Date	Time
CCB			-0.000052							08/19/1999	1345
CCV		V170626C	0.00527		0.005000		105.4	%	90-110	08/19/1999	1426
CCB			-0.000033							08/19/1999	1429
CCV		V170626C	0.00514		0.005000		102.8	%	90-110	08/19/1999	1507
CCB			-0.000056							08/19/1999	1510
PDS	907643-1	V170626C	0.00690		0.005000	0.00164	105.2	%	75-125	08/19/1999	1518
CCV		V170626C	0.00515		0.005000		103.0	%	90-110	08/19/1999	1540
CCB			-0.000047							08/19/1999	1544

Test Method.....: EPA 6010B | Batch.....: 45370 | Analyst...: pal
Method Description.: Metals Analysis (ICAP) | Units.....: mg/L
Parameter.....: Molybdenum (Mo)

QC	Lab ID	Reagent	QC Result	QC Result	True Value	Orig. Value	Calc. Result	*	Limits	Date	Time
CAL		ICPCALBLK	706.00000							08/25/1999	0913
CAL		ICPCALSTD	15552.00000		2.00					08/25/1999	0923
ICV		V170640H	1.07985		1.000		108.0	%	90-110	08/25/1999	1005
ICB			0.00088							08/25/1999	1010
CCV		V170640H	1.07043		1.000		107.0	%	90-110	08/25/1999	1100
CCB			0.00183							08/25/1999	1106
MD	909264-1		-0.00147			-0.00101	0.00046	A	0.05000	08/25/1999	1117
MS	909264-1	V16006804	2.33640		2.500000	-0.00101	93.5	%	75-125	08/25/1999	1122
CCV		V170640H	1.07849		1.000		107.8	%	90-110	08/25/1999	1149
CCB			0.00137							08/25/1999	1154
CCV		V170640H	1.07492		1.000		107.5	%	90-110	08/25/1999	1237
CCB			0.00036							08/25/1999	1243

Test Method.....: EPA 6010B | Batch.....: 45370 | Analyst...: pal
Method Description.: Metals Analysis (ICAP) | Units.....: mg/L
Parameter.....: Nickel (Ni)

QC	Lab ID	Reagent	QC Result	QC Result	True Value	Orig. Value	Calc. Result	*	Limits	Date	Time
CAL		ICPCALBLK	43.50000		0.00					08/25/1999	0913
CAL		ICPCALSTD	20138.50000		1.0					08/25/1999	0921
ICV		V170640H	1.57233		1.6		98.3	%	90-110	08/25/1999	1005
ICB			-0.00004							08/25/1999	1010
ISB		V170640F	0.83078		1.00		83.1	%	80-120	08/25/1999	1015
CCV		V170640H	1.55937		1.6		97.5	%	90-110	08/25/1999	1100
CCB			-0.00077							08/25/1999	1106
MD	909264-1		0.00201			0.00291	0.00090	A	0.01000	08/25/1999	1117
MS	909264-1	V16006804	0.36238		0.400000	0.00291	89.9	%	75-125	08/25/1999	1122
CCV		V170640H	1.54588		1.6		96.6	%	90-110	08/25/1999	1149
CCB			0.00024							08/25/1999	1154
ISB		V170640F	0.82414		1.00		82.4	%	80-120	08/25/1999	1226
CCV		V170640H	1.54757		1.6		96.7	%	90-110	08/25/1999	1237
CCB			-0.00022							08/25/1999	1243

* %=% REC, R=RPD, A=ABS Diff., D=% Diff.

CORE LABORATORIES

QUALITY CONTROL RESULTS

Job Number.: 909264 | Report Date.: 08/26/99

CUSTOMER: Marathon Oil Company | PROJECT: MOC - Bertha Barber | ATTN: Mr. Paul Peacock

Test Method.....: EPA 6010B | Batch.....: 45159 | Analyst...: chh
Method Description.: Metals Analysis (ICAP) | Units.....: mg/L
Parameter.....: Potassium (K)

QC	Lab ID	Reagent	QC Result	QC Result	True Value	Orig. Value	Calc. Result	*	Limits	Date	Time
CAL		ICPCALBLK	-0.00309		0.00					08/20/1999	0902
CAL		ICPCALSTD	0.56369		20.0					08/20/1999	0906
ICV		V170639F	19.18136		20.00		95.9	%	90-110	08/20/1999	0921
ICB			0.11291							08/20/1999	0927
CCV		V170639F	18.86026		20.00		94.3	%	90-110	08/20/1999	1008
CCB			0.14467							08/20/1999	1013
MD	909264-1		11.82427			11.66901	1.3	R	20	08/20/1999	1026
MS	909264-1	ICPSPK99A	61.90190		50.000	11.66901	100.5	%	75-125	08/20/1999	1031
CCV		V170639F	19.05786		20.00		95.3	%	90-110	08/20/1999	1113
CCB			0.33168							08/20/1999	1118
CCV		V170639F	18.64502		20.00		93.2	%	90-110	08/20/1999	1143
CCB			0.15172							08/20/1999	1148

Test Method.....: EPA 6010B | Batch.....: 45092 | Analyst...: chh
Method Description.: Metals Analysis (ICAP) | Units.....: mg/L
Parameter.....: Selenium (Se)

QC	Lab ID	Reagent	QC Result	QC Result	True Value	Orig. Value	Calc. Result	*	Limits	Date	Time
CCV		V170638F	3.82338		4.00		95.6	%	90-110	08/19/1999	1328
CCB			0.00520							08/19/1999	1334
MD	909264-1		0.00101			0.01384	0.01283	A	0.02000	08/19/1999	1348
MS	909264-1	V16006105	1.16384		1.000000	0.01384	115.0	%	75-125	08/19/1999	1353
CCV		V170638F	3.81361		4.00		95.3	%	90-110	08/19/1999	1421
CCB			0.00731							08/19/1999	1426
CCV		V170638F	3.86416		4.00		96.6	%	90-110	08/19/1999	1509
CCB			0.00082							08/19/1999	1515

Test Method.....: EPA 6010B | Batch.....: 45092 | Analyst...: chh
Method Description.: Metals Analysis (ICAP) | Units.....: mg/L
Parameter.....: Silver (Ag)

QC	Lab ID	Reagent	QC Result	QC Result	True Value	Orig. Value	Calc. Result	*	Limits	Date	Time
ISB		V170640F	0.96706		1.00		96.7	%	80-120	08/19/1999	1321
CCV		V170638F	0.73895		0.80		92.4	%	90-110	08/19/1999	1328
CCB			-0.00096							08/19/1999	1334
MD	909264-1		-0.00401			-0.00126	0.00275	A	0.01000	08/19/1999	1348
MS	909264-1	V16006105	0.20837		0.200000	-0.00126	104.8	%	75-125	08/19/1999	1353
CCV		V170638F	0.76459		0.80		95.6	%	90-110	08/19/1999	1421
CCB			0.00064							08/19/1999	1426
ISB		V170640F	0.98792		1.00		98.8	%	80-120	08/19/1999	1500
CCV		V170638F	0.76598		0.80		95.7	%	90-110	08/19/1999	1509
CCB			-0.00035							08/19/1999	1515

* %=% REC, R=RPD, A=ABS Diff., D=% Diff.

CORE LABORATORIES

QUALITY CONTROL RESULTS

Job Number.: 909264

Report Date.: 08/26/99

CUSTOMER: Marathon Oil Company | PROJECT: MOC - Bertha Barber | ATTN: Mr. Paul Peacock

Test Method.....: EPA 6010B
Method Description.: Metals Analysis (ICAP)
Parameter.....: Sodium (Na)

Batch.....: 45227
Units.....: mg/L

Analyst...: pal

QC	Lab ID	Reagent	QC Result	QC Result	True Value	Orig. Value	Calc. Result	*	Limits	Date	Time
CCV		V16005308	10.87206		10.000000		108.7	%	90-110	08/23/1999	1053
CCB			0.03354							08/23/1999	1058
MD	909264-1		62.10829			64.15908	3.2	R	20	08/23/1999	1108
MS	909264-1	V16005308	165.88645		100.000000	64.15908	101.7	%	75-125	08/23/1999	1113
CCV		V16005308	10.84571		10.000000		108.5	%	90-110	08/23/1999	1209
CCB			0.30666							08/23/1999	1214
CAL		ICPCALBLK	0.06660		0.00					08/23/1999	1409
CAL		ICPCALSTD	0.96399		10.0					08/23/1999	1411
ICV		V16005308	9.97214		10.000000		99.7	%	90-110	08/23/1999	1415
ICB			0.06128							08/23/1999	1419
PB	813-4		0.15043							08/23/1999	1443
LCS	813-4	ICPSPK99A	52.21751		50.000		104.4	%	80-120	08/23/1999	1447
MD	908961-1		0.50590			0.55827	0.05237	A	0.50000	08/23/1999	1455
MS	908961-1	ICPSPK99A	50.83797		50.000	0.55827	100.6	%	75-125	08/23/1999	1459
CCV		V16005308	10.34989		10.000000		103.5	%	90-110	08/23/1999	1516
CCB			0.08023							08/23/1999	1521
CCV		V16005308	10.80120		10.000000		108.0	%	90-110	08/23/1999	1544
CCB			0.09360							08/23/1999	1548

Test Method.....: EPA 6010B
Method Description.: Metals Analysis (ICAP)
Parameter.....: Zinc (Zn)

Batch.....: 45092
Units.....: mg/L

Analyst...: chh

QC	Lab ID	Reagent	QC Result	QC Result	True Value	Orig. Value	Calc. Result	*	Limits	Date	Time
ISB		V170640F	0.91398		1.00		91.4	%	80-120	08/19/1999	1321
CCV		V170638F	0.79159		0.80		98.9	%	90-110	08/19/1999	1328
CCB			-0.00048							08/19/1999	1334
MD	909264-1		0.01724			0.01945	0.00221	A	0.01000	08/19/1999	1348
MS	909264-1	V16006105	0.25703		0.200000	0.01945	118.8	%	75-125	08/19/1999	1353
CCV		V170638F	0.80227		0.80		100.3	%	90-110	08/19/1999	1421
CCB			-0.00060							08/19/1999	1426
ISB		V170640F	0.93490		1.00		93.5	%	80-120	08/19/1999	1500
CCV		V170638F	0.81728		0.80		102.2	%	90-110	08/19/1999	1509
CCB			-0.00048							08/19/1999	1515

* %=% REC, R=RPD, A=ABS Diff., D=% Diff.

CORE LABORATORIES

QUALITY CONTROL RESULTS

Job Number.: 909264 Report Date.: 08/26/99

CUSTOMER: Marathon Oil Company PROJECT: MOC - Bertha Barber ATTN: Mr. Paul Peacock

QC Type	Description	Reag. Code	Lab ID	Dilution Factor	Date	Time

Test Method.....: EPA 8310 Batch.....: 45231 Analyst...: rm
Method Description.: Polynuclear Aromatic Hydrocarbons-HPLC Units.....: ug/L

MB	Method Blank				08/20/1999 2141

Parameter/Test Description	QC Result	QC Result	True Value	Orig. Value	Calc. Result	*	Limits
Acenaphthene	ND						
Acenaphthylene	ND						
Anthracene	ND						
Benzo(b)fluoranthene	ND						
Benzo(k)fluoranthene	ND						
Benzo(a)anthracene	ND						
Benzo(a)pyrene	ND						
Benzo(ghi)perylene	ND						
Chrysene	ND						
Dibenzo(a,h)anthracene	ND						
Fluoranthene	ND						
Fluorene	ND						
Indeno(1,2,3-cd)pyrene	ND						
Naphthalene	ND						
Phenanthrene	ND						
Pyrene	ND						

LCS	Laboratory Control Sample	V173720B			08/20/1999 2223

Parameter/Test Description	QC Result	QC Result	True Value	Orig. Value	Calc. Result	*	Limits
Acenaphthene	583.8		1000.000000		58.4	%	10-92
Acenaphthylene	691.27		1000.000000				
Anthracene	858.8		1002.000000		85.7	%	33-110
Benzo(b)fluoranthene	417.7		500.000000		83.5	%	57-102
Benzo(k)fluoranthene	441.6		500.000000		88.3	%	59-107
Benzo(a)anthracene	468.3		500.000000		93.7	%	61-109
Benzo(a)pyrene	493.4		500.000000		98.7	%	42-131
Benzo(ghi)perylene	489.0		500.000000		97.8	%	55-119
Chrysene	435.5		500.000000		87.1	%	59-103
Dibenzo(a,h)anthracene	452.4		500.000000		90.5	%	63-108
Fluoranthene	471.9		500.000000		94.4	%	40-122
Fluorene	645.7		1000.000000		64.6	%	20-95
Indeno(1,2,3-cd)pyrene	427.5		500.000000		85.5	%	57-104
Naphthalene	417.1		1000.000000		41.7	%	10-82
Phenanthrene	396.8		502.500000		79.0	%	37-102
Pyrene	483.1		500.000000		96.6	%	59-111

MS	Matrix Spike	V173720B	909313-2		08/21/1999 0733

Parameter/Test Description	QC Result	QC Result	True Value	Orig. Value	Calc. Result	*	Limits
Acenaphthene	693.9		1000.000000	ND	69.4	%	10-92
Acenaphthylene	440.81		1000.000000	ND	44.1	%	11-127
Anthracene	934.4		1002.000000	ND	93.3	%	33-110
Benzo(b)fluoranthene	430.6		500.000000	ND	86.1	%	57-102
Benzo(k)fluoranthene	450.9		500.000000	ND	90.2	%	59-107
Benzo(a)anthracene	480.0		500.000000	ND	96.0	%	61-109

* %=% REC, R=RPD, A=ABS Diff., D=% Diff.

CORE LABORATORIES

Job Number.: 909264

QUALITY CONTROL RESULTS

Report Date.: 08/26/99

CUSTOMER: Marathon Oil Company PROJECT: MOC - Bertha Barber ATTN: Mr. Paul Peacock

QC Type	Description	Reag. Code	Lab ID	Dilution Factor	Date	Time
MS	Matrix Spike	V173720B	909313-2		08/21/1999	0733

Parameter/Test Description	QC Result	QC Result	True Value	Orig. Value	Calc. Result	*	Limits
Benzo(a)pyrene	517.1		500.000000	ND	103.4	%	42-131
Benzo(ghi)perylene	511.9		500.000000	ND	102.4	%	55-119
Chrysene	452.1		500.000000	ND	90.4	%	59-103
Dibenzo(a,h)anthracene	470.1		500.000000	ND	94.0	%	63-108
Fluoranthene	417.0		500.000000	ND	83.4	%	40-122
Fluorene	758.7		1000.000000	23.0	73.6	%	20-95
Indeno(1,2,3-cd)pyrene	432.6		500.000000	4.2	85.7	%	57-104
Naphthalene	587.7		1000.000000	ND	58.8	%	10-82
Phenanthrene	445.1		502.500000	37.5	81.1	%	37-102
Pyrene	501.1		500.000000	11.0	98.0	%	59-111

QC Type	Description	Reag. Code	Lab ID	Dilution Factor	Date	Time
MSD	Matrix Spike Duplicate	V173720B	909313-2		08/21/1999	0815

Parameter/Test Description	QC Result	QC Result	True Value	Orig. Value	Calc. Result	*	Limits
Acenaphthene	749.7	693.9	1000.000000	ND	75.0	%	10-92
					7.7	R	30
Acenaphthylene	888.67	440.81	1000.000000	ND	88.9	%	11-127
					67.4	R	30
Anthracene	756.0	934.4	1002.000000	ND	75.4	%	33-110
					21.1	R	30
Benzo(b)fluoranthene	320.2	430.6	500.000000	ND	64.0	%	57-102
					29.4	R	30
Benzo(k)fluoranthene	341.0	450.9	500.000000	ND	68.2	%	59-107
					27.8	R	30
Benzo(a)anthracene	375.4	480.0	500.000000	ND	75.1	%	61-109
					24.5	R	30
Benzo(a)pyrene	402.0	517.1	500.000000	ND	80.4	%	42-131
					25.0	R	30
Benzo(ghi)perylene	388.9	511.9	500.000000	ND	77.8	%	55-119
					27.3	R	30
Chrysene	346.3	452.1	500.000000	ND	69.3	%	59-103
					26.5	R	30
Dibenzo(a,h)anthracene	345.9	470.1	500.000000	ND	69.2	%	63-108
					30.4	R	30
Fluoranthene	364.6	417.0	500.000000	ND	72.9	%	40-122
					13.4	R	30
Fluorene	628.5	758.7	1000.000000	23.0	60.5	%	20-95
					18.8	R	30
Indeno(1,2,3-cd)pyrene	324.8	432.6	500.000000	4.2	64.1	%	57-104
					28.5	R	30
Naphthalene	567.2	587.7	1000.000000	ND	56.7	%	10-82
					3.6	R	30
Phenanthrene	386.5	445.1	502.500000	37.5	69.5	%	37-102
					14.1	R	30
Pyrene	420.9	501.1	500.000000	11.0	82.0	%	59-111
					17.4	R	30

* %=% REC, R=RPD, A=ABS Diff., D=% Diff.

CORE LABORATORIES

QUALITY CONTROL RESULTS

Job Number.: 909264

Report Date.: 08/26/99

CUSTOMER: Marathon Oil Company PROJECT: MOC - Bertha Barber ATTN: Mr. Paul Peacock

QC Type	Description	Reag. Code	Lab ID	Dilution Factor	Date	Time

Test Method.....: EPA 8310 Batch.....: 45399 Analyst...: rm
Method Description.: Polynuclear Aromatic Hydrocarbons-HPLC Units.....: ug/L

MB	Method Blank				08/24/1999	1715

Parameter/Test Description	QC Result	QC Result	True Value	Orig. Value	Calc. Result	*	Limits
Acenaphthene	ND						
Acenaphthylene	ND						
Anthracene	ND						
Benzo(b)fluoranthene	ND						
Benzo(k)fluoranthene	ND						
Benzo(a)anthracene	ND						
Benzo(a)pyrene	ND						
Benzo(ghi)perylene	ND						
Chrysene	ND						
Dibenzo(a,h)anthracene	ND						
Fluoranthene	ND						
Fluorene	ND						
Indeno(1,2,3-cd)pyrene	ND						
Naphthalene	ND						
Phenanthrene	ND						
Pyrene	ND						

LCS	Laboratory Control Sample	V173720B			08/24/1999	1758

Parameter/Test Description	QC Result	QC Result	True Value	Orig. Value	Calc. Result	*	Limits
Acenaphthene	692.2		1000.000000		69.2	%	10-92
Acenaphthylene	1035.95		1000.000000				
Anthracene	820.9		1002.000000		81.9	%	33-110
Benzo(b)fluoranthene	389.1		500.000000		77.8	%	57-102
Benzo(k)fluoranthene	393.8		500.000000		78.8	%	59-107
Benzo(a)anthracene	412.8		500.000000		82.6	%	61-109
Benzo(a)pyrene	406.7		500.000000		81.3	%	42-131
Benzo(ghi)perylene	406.9		500.000000		81.4	%	55-119
Chrysene	401.9		500.000000		80.4	%	59-103
Dibenzo(a,h)anthracene	409.1		500.000000		81.8	%	63-108
Fluoranthene	419.5		500.000000		83.9	%	40-122
Fluorene	771.8		1000.000000		77.2	%	20-95
Indeno(1,2,3-cd)pyrene	378.4		500.000000		75.7	%	57-104
Naphthalene	674.7		1000.000000		67.5	%	10-82
Phenanthrene	460.5		502.500000		91.6	%	37-102
Pyrene	462.6		500.000000		92.5	%	59-111

MS	Matrix Spike	V173720B	909366-1		08/25/1999	0514

Parameter/Test Description	QC Result	QC Result	True Value	Orig. Value	Calc. Result	*	Limits
Acenaphthene	636.5		1000.000000	ND	63.6	%	10-92
Acenaphthylene	901.46		1000.000000	ND	90.1	%	11-127
Anthracene	762.8		1002.000000	ND	76.1	%	33-110
Benzo(b)fluoranthene	418.7		500.000000	ND	83.7	%	57-102
Benzo(k)fluoranthene	429.7		500.000000	ND	85.9	%	59-107
Benzo(a)anthracene	441.2		500.000000	ND	88.2	%	61-109

* %=% REC, R=RPD, A=ABS Diff., D=% Diff.

CORE LABORATORIES

QUALITY CONTROL RESULTS

Job Number.: 909264

Report Date.: 08/26/99

CUSTOMER: Marathon Oil Company | PROJECT: MOC - Bertha Barber | ATTN: Mr. Paul Peacock

QC Type	Description	Reag. Code	Lab ID	Dilution Factor	Date	Time
MS	Matrix Spike	V173720B	909366-1		08/25/1999	0514

Parameter/Test Description	QC Result	QC Result	True Value	Orig. Value	Calc. Result	*	Limits
Benzo(a)pyrene	456.7		500.000000	ND	91.3	%	42-131
Benzo(ghi)perylene	457.3		500.000000	ND	91.5	%	55-119
Chrysene	438.0		500.000000	ND	87.6	%	59-103
Dibenzo(a,h)anthracene	454.3		500.000000	ND	90.9	%	63-108
Fluoranthene	460.9		500.000000	ND	92.2	%	40-122
Fluorene	645.1		1000.000000	ND	64.5	%	20-95
Indeno(1,2,3-cd)pyrene	427.2		500.000000	ND	85.4	%	57-104
Naphthalene	525.9		1000.000000	ND	52.6	%	10-82
Phenanthrene	396.9		502.500000	ND	79.0	%	37-102
Pyrene	479.5		500.000000	ND	95.9	%	59-111

MSD	Matrix Spike Duplicate	V173720B	909366-1		08/25/1999	0557

Parameter/Test Description	QC Result	QC Result	True Value	Orig. Value	Calc. Result	*	Limits
Acenaphthene	801.8	636.5	1000.000000	ND	80.2	%	10-92
					23.0	R	30
Acenaphthylene	975.43	901.46	1000.000000	ND	97.5	%	11-127
					7.9	R	30
Anthracene	904.8	762.8	1002.000000	ND	90.3	%	33-110
					17.0	R	30
Benzo(b)fluoranthene	481.1	418.7	500.000000	ND	96.2	%	57-102
					13.9	R	30
Benzo(k)fluoranthene	488.1	429.7	500.000000	ND	97.6	%	59-107
					12.7	R	30
Benzo(a)anthracene	493.7	441.2	500.000000	ND	98.7	%	61-109
					11.2	R	30
Benzo(a)pyrene	515.2	456.7	500.000000	ND	103.0	%	42-131
					12.0	R	30
Benzo(ghi)perylene	506.6	457.3	500.000000	ND	101.3	%	55-119
					10.2	R	30
Chrysene	488.6	438.0	500.000000	ND	97.7	%	59-103
					10.9	R	30
Dibenzo(a,h)anthracene	509.9	454.3	500.000000	ND	102.0	%	63-108
					11.5	R	30
Fluoranthene	489.6	460.9	500.000000	ND	97.9	%	40-122
					6.0	R	30
Fluorene	760.6	645.1	1000.000000	ND	76.1	%	20-95
					16.4	R	30
Indeno(1,2,3-cd)pyrene	466.8	427.2	500.000000	ND	93.4	%	57-104
					8.9	R	30
Naphthalene	538.1	525.9	1000.000000	ND	53.8	%	10-82
					2.3	R	30
Phenanthrene	473.0	396.9	502.500000	ND	94.1	%	37-102
					17.5	R	30
Pyrene	527.5	479.5	500.000000	ND	105.5	%	59-111
					9.5	R	30

* %=% REC, R=RPD, A=ABS Diff., D=% Diff.

CORELAB

CORE LABORATORIES

QUALITY CONTROL RESULTS

Job Number.: 909264

Report Date.: 08/26/99

CUSTOMER: Marathon Oil Company | PROJECT: MOC - Bertha Barber | ATTN: Mr. Paul Peacock

QC Type	Description	Reag. Code	Lab ID	Dilution Factor	Date	Time

Test Method.....: EPA 8260B
Method Description.: Volatile Organic Compounds

Batch.....: 45048
Units.....: ug/L

Analyst...: weh

MS	Matrix Spike	CLPVOAMS2	909162-1	10	08/18/1999	0235

Parameter/Test Description	QC Result	QC Result	True Value	Orig. Value	Calc. Result	*	Limits
Benzene	48.30		50	ND	96.6	%	67-130
Chlorobenzene	48.79		50	ND	97.6	%	74-116
1,1-Dichloroethene	47.17		50	ND	94.3	%	51-141
Toluene	49.55		50	1.16	96.8	%	75-114
Trichloroethene	45.38		50	ND	90.8	%	72-114

MSD	Matrix Spike Duplicate	CLPVOAMS2	909162-1	10	08/18/1999	0306

Parameter/Test Description	QC Result	QC Result	True Value	Orig. Value	Calc. Result	*	Limits
Benzene	49.19	48.30	50	ND	98.4	%	67-130
					1.8	R	30
Chlorobenzene	49.01	48.79	50	ND	98.0	%	74-116
					0.4	R	30
1,1-Dichloroethene	47.80	47.17	50	ND	95.6	%	51-141
					1.3	R	30
Toluene	49.82	49.55	50	1.16	97.3	%	75-114
					0.5	R	30
Trichloroethene	47.10	45.38	50	ND	94.2	%	72-114
					3.7	R	30

MS	Matrix Spike	CLPVOAMS2	909165-1	10	08/18/1999	0408

Parameter/Test Description	QC Result	QC Result	True Value	Orig. Value	Calc. Result	*	Limits
Benzene	88.38		50	40.98	94.8	%	67-130
Chlorobenzene	48.18		50	ND	96.4	%	74-116
1,1-Dichloroethene	47.11		50	ND	94.2	%	51-141
Toluene	51.35		50	3.83	95.0	%	75-114
Trichloroethene	44.56		50	ND	89.1	%	72-114

MSD	Matrix Spike Duplicate	CLPVOAMS2	909165-1	10	08/18/1999	0439

Parameter/Test Description	QC Result	QC Result	True Value	Orig. Value	Calc. Result	*	Limits
Benzene	90.06	88.38	50	40.98	98.2	%	67-130
					1.9	R	30
Chlorobenzene	50.16	48.18	50	ND	100.3	%	74-116
					4.0	R	30
1,1-Dichloroethene	46.92	47.11	50	ND	93.8	%	51-141
					0.4	R	30
Toluene	52.73	51.35	50	3.83	97.8	%	75-114
					2.7	R	30
Trichloroethene	46.83	44.56	50	ND	93.7	%	72-114
					5.0	R	30

* %=% REC, R=RPD, A=ABS Diff., D=% Diff.

CORE LABORATORIES

QUALITY CONTROL RESULTS

Job Number.: 909264

Report Date.: 08/26/99

CUSTOMER: Marathon Oil Company PROJECT: MOC - Bertha Barber ATTN: Mr. Paul Peacock

QC Type	Description	Reag. Code	Lab ID	Dilution Factor	Date	Time
MB	Method Blank				08/18/1999	0843

Parameter/Test Description	QC Result	QC Result	True Value	Orig. Value	Calc. Result	*	Limits
Acrylonitrile	ND						
Isopropylbenzene	ND						
Dichlorodifluoromethane	ND						
tert-Butyl methyl ether (MTBE)	ND						
1,1,1,2-Tetrachloroethane	ND						
1,2,3-Trichloropropane	ND						
Bromobenzene	ND						
Dibromomethane	ND						
1,4-Dichlorobenzene	ND						
1,3-Dichlorobenzene	ND						
1,2-Dichlorobenzene	ND						
1,2-Dibromoethane (EDB)	ND						
1,2-Dibromo-3-chloropropane	ND						
Trichlorofluoromethane	ND						
1,2,4-Trichlorobenzene	ND						
2-Chloroethylvinyl ether	ND						
m&p-Xylenes	ND						
o-Xylene	ND						
1,2,4-Trimethylbenzene	ND						
Acrolein	ND						
Acetone	ND						
Benzene	ND						
Bromodichloromethane	ND						
Bromoform	ND						
Bromomethane	ND						
2-Butanone	ND						
Carbon disulfide	ND						
Carbon tetrachloride	ND						
Dibromochloromethane	ND						
Chlorobenzene	ND						
Chloroethane	ND						
Chloroform	ND						
Chloromethane	ND						
1,1-Dichloroethane	ND						
1,2-Dichloroethane	ND						
1,1-Dichloroethene	ND						
trans-1,2-Dichloroethene	ND						
cis-1,2-Dichloroethene	ND						
1,2-Dichloropropane	ND						
cis-1,3-Dichloropropene	ND						
trans-1,3-Dichloropropene	ND						
Ethylbenzene	ND						
2-Hexanone	ND						
Methylene chloride	ND						
4-Methyl-2-pentanone (MIBK)	ND						
Styrene	ND						
1,1,2,2-Tetrachloroethane	ND						
Tetrachloroethene	ND						
Toluene	ND						
1,1,1-Trichloroethane	ND						
1,1,2-Trichloroethane	ND						
Trichloroethene	ND						
Vinyl acetate	ND						
Vinyl chloride	ND						

* %=% REC, R=RPD, A=ABS Diff., D=% Diff.

CORE LABORATORIES

QUALITY CONTROL RESULTS

Job Number.: 909264 | Report Date.: 08/26/99

CUSTOMER: Marathon Oil Company | PROJECT: MOC - Bertha Barber | ATTN: Mr. Paul Peacock

QC Type	Description	Reag. Code	Lab ID	Dilution Factor	Date	Time
MB	Method Blank				08/18/1999	0843

Parameter/Test Description	QC Result	QC Result	True Value	Orig. Value	Calc. Result	*	Limits
Xylenes (total)	ND						

QC Type	Description	Reag. Code	Lab ID	Dilution Factor	Date	Time
LCS	Laboratory Control Sample	CLPVOAMS2			08/18/1999	0914

Parameter/Test Description	QC Result	QC Result	True Value	Orig. Value	Calc. Result	*	Limits
Benzene	47.47		50		94.9	%	67-130
Chlorobenzene	48.80		50		97.6	%	74-116
1,1-Dichloroethene	48.52		50		97.0	%	51-141
Toluene	48.17		50		96.3	%	75-114
Trichloroethene	46.27		50		92.5	%	72-114

QC Type	Description	Reag. Code	Lab ID	Dilution Factor	Date	Time
MS	Matrix Spike	CLPVOAMS2	909244-2		08/18/1999	1121

Parameter/Test Description	QC Result	QC Result	True Value	Orig. Value	Calc. Result	*	Limits
Benzene	48.91		50	2.42	93.0	%	67-130
Chlorobenzene	48.32		50	ND	96.6	%	74-116
1,1-Dichloroethene	46.51		50	ND	93.0	%	51-141
Toluene	47.66		50	ND	95.3	%	75-114
Trichloroethene	45.84		50	ND	91.7	%	72-114

QC Type	Description	Reag. Code	Lab ID	Dilution Factor	Date	Time
MSD	Matrix Spike Duplicate	CLPVOAMS2	909244-2		08/18/1999	1153

Parameter/Test Description	QC Result	QC Result	True Value	Orig. Value	Calc. Result	*	Limits
Benzene	49.36	48.91	50	2.42	93.9	%	67-130
					0.9	R	30
Chlorobenzene	48.38	48.32	50	ND	96.8	%	74-116
					0.1	R	30
1,1-Dichloroethene	47.74	46.51	50	ND	95.5	%	51-141
					2.6	R	30
Toluene	48.53	47.66	50	ND	97.1	%	75-114
					1.8	R	30
Trichloroethene	45.70	45.84	50	ND	91.4	%	72-114
					0.3	R	30

Test Method.....: EPA 8260B | Batch.....: 45057 | Analyst...: weh
Method Description.: Volatile Organic Compounds | Units.....: ug/L

QC Type	Description	Reag. Code	Lab ID	Dilution Factor	Date	Time
MB	Method Blank				08/18/1999	0818

Parameter/Test Description	QC Result	QC Result	True Value	Orig. Value	Calc. Result	*	Limits
1,3-Dichlorobenzene	ND						
1,4-Dichlorobenzene	ND						
m&p-Xylenes	ND						
o-Xylene	ND						
1,2,4-Trimethylbenzene	ND						

* %=% REC, R=RPD, A=ABS Diff., D=% Diff.

CORE LABORATORIES

QUALITY CONTROL RESULTS

Job Number.: 909264

Report Date.: 08/26/99

CUSTOMER: Marathon Oil Company PROJECT: MOC - Bertha Barber ATTN: Mr. Paul Peacock

QC Type	Description	Reag. Code	Lab ID	Dilution Factor	Date	Time
MB	Method Blank				08/18/1999	0818

Parameter/Test Description	QC Result	QC Result	True Value	Orig. Value	Calc. Result	*	Limits
Isopropylbenzene	ND						
Dichlorodifluoromethane	ND						
Dibromomethane	ND						
Bromobenzene	ND						
1,2,3-Trichloropropane	ND						
1,1,1,2-Tetrachloroethane	ND						
tert-Butyl methyl ether (MTBE)	ND						
Acrylonitrile	ND						
Acrolein	ND						
Trichlorofluoromethane	ND						
1,2-Dibromo-3-chloropropane	ND						
2-Chloroethylvinyl ether	ND						
1,2-Dibromoethane (EDB)	ND						
1,2,4-Trichlorobenzene	ND						
1,2-Dichlorobenzene	ND						
Acetone	ND						
Benzene	ND						
Bromodichloromethane	ND						
Bromoform	ND						
Bromomethane	ND						
2-Butanone	ND						
Carbon disulfide	ND						
Carbon tetrachloride	ND						
Dibromochloromethane	ND						
Chlorobenzene	ND						
Chloroethane	ND						
Chloroform	ND						
Chloromethane	ND						
1,1-Dichloroethane	ND						
1,2-Dichloroethane	ND						
1,1-Dichloroethene	ND						
trans-1,2-Dichloroethene	ND						
cis-1,2-Dichloroethene	ND						
1,2-Dichloropropane	ND						
cis-1,3-Dichloropropene	ND						
trans-1,3-Dichloropropene	ND						
Ethylbenzene	ND						
2-Hexanone	ND						
Methylene chloride	ND						
4-Methyl-2-pentanone (MIBK)	ND						
Styrene	ND						
1,1,2,2-Tetrachloroethane	ND						
Tetrachloroethene	ND						
Toluene	ND						
1,1,1-Trichloroethane	ND						
1,1,2-Trichloroethane	ND						
Trichloroethene	ND						
Vinyl acetate	ND						
Vinyl chloride	ND						
Xylenes (total)	ND						

* %=% REC, R=RPD, A=ABS Diff., D=% Diff.

CORE LABORATORIES

QUALITY CONTROL RESULTS

Job Number.: 909264

Report Date.: 08/26/99

CUSTOMER: Marathon Oil Company PROJECT: MOC - Bertha Barber ATTN: Mr. Paul Peacock

QC Type	Description	Reag. Code	Lab ID	Dilution Factor	Date Time
MSD	Matrix Spike Duplicate	CLPVOAMS2	909164-1	10	08/19/1999 0210

Parameter/Test Description	QC Result	QC Result	True Value	Orig. Value	Calc. Result	*	Limits
Benzene	45.45	47.88	50	1.54	87.8	%	67-130
					5.2	R	30
Chlorobenzene	44.05	46.60	50	ND	88.1	%	74-116
					5.6	R	30
1,1-Dichloroethene	44.54	45.07	50	ND	89.1	%	51-141
					1.2	R	30
Toluene	44.85	48.02	50	1.82	86.1	%	75-114
					6.8	R	30
Trichloroethene	43.16	46.33	50	ND	86.3	%	72-114
					7.1	R	30

MB	Method Blank				08/19/1999 0925

Parameter/Test Description	QC Result	QC Result	True Value	Orig. Value	Calc. Result	*	Limits
1,2,4-Trichlorobenzene	ND						
m&p-Xylenes	ND						
o-Xylene	ND						
1,2,4-Trimethylbenzene	ND						
Isopropylbenzene	ND						
1,2-Dibromoethane (EDB)	ND						
Dichlorodifluoromethane	ND						
Dibromomethane	ND						
tert-Butyl methyl ether (MTBE)	ND						
Bromobenzene	ND						
1,2-Dibromo-3-chloropropane	ND						
1,2,3-Trichloropropane	ND						
1,1,1,2-Tetrachloroethane	ND						
Acrylonitrile	ND						
Acrolein	ND						
2-Chloroethylvinyl ether	ND						
Trichlorofluoromethane	ND						
1,4-Dichlorobenzene	ND						
1,3-Dichlorobenzene	ND						
1,2-Dichlorobenzene	ND						
Acetone	ND						
Benzene	ND						
Bromodichloromethane	ND						
Bromoform	ND						
Bromomethane	ND						
2-Butanone	ND						
Carbon disulfide	ND						
Carbon tetrachloride	ND						
Dibromochloromethane	ND						
Chlorobenzene	ND						
Chloroethane	ND						
Chloroform	ND						
Chloromethane	ND						
1,1-Dichloroethane	ND						
1,2-Dichloroethane	ND						
1,1-Dichloroethene	ND						
trans-1,2-Dichloroethene	ND						
cis-1,2-Dichloroethene	ND						

* %=% REC, R=RPD, A=ABS Diff., D=% Diff.

CORE LABORATORIES

QUALITY CONTROL RESULTS

Job Number.: 909264

Report Date.: 08/26/99

CUSTOMER: Marathon Oil Company PROJECT: MOC - Bertha Barber ATTN: Mr. Paul Peacock

QC Type	Description	Reag. Code	Lab ID	Dilution Factor	Date	Time
MB	Method Blank				08/19/1999	0925

Parameter/Test Description	QC Result	QC Result	True Value	Orig. Value	Calc. Result	*	Limits
1,2-Dichloropropane	ND						
cis-1,3-Dichloropropene	ND						
trans-1,3-Dichloropropene	ND						
Ethylbenzene	ND						
2-Hexanone	ND						
Methylene chloride	ND						
4-Methyl-2-pentanone (MIBK)	ND						
Styrene	ND						
1,1,2,2-Tetrachloroethane	ND						
Tetrachloroethene	ND						
Toluene	ND						
1,1,1-Trichloroethane	ND						
1,1,2-Trichloroethane	ND						
Trichloroethene	ND						
Vinyl acetate	ND						
Vinyl chloride	ND						
Xylenes (total)	ND						

LCS	Laboratory Control Sample	CLPVOAMS2			08/19/1999 0956

Parameter/Test Description	QC Result	QC Result	True Value	Orig. Value	Calc. Result	*	Limits
Benzene	48.81		50		97.6	%	67-130
Chlorobenzene	48.22		50		96.4	%	74-116
1,1-Dichloroethene	48.29		50		96.6	%	51-141
Toluene	49.12		50		98.2	%	75-114
Trichloroethene	48.89		50		97.8	%	72-114

* %=% REC, R=RPD, A=ABS Diff., D=% Diff.

CORE LABORATORIES

SURROGATE RECOVERIES REPORT

Job Number.: 909264

Report Date.: 08/26/99

CUSTOMER: Marathon Oil Company | PROJECT: MOC - Bertha Barber | ATTN: Mr. Paul Peacock

Method.....: Volatile Organic Compounds
Method Code.....: 826TCL

Batch.....: 45048
Analyst.....: weh

Surrogate	Units
1,2-Dichloroethane-d4 (surrogate)	ug/L

Lab ID	Matrix	QC Type	Dilution	Result	True Value	Percent Recovery	Limits	Flag	Date	Time
909162-1			10	50.68	50.00	101.4	76-120		08/18/1999	0204
909162-1		MS	10	50.83	50.00	101.7	76-120		08/18/1999	0235
909162-1		MSD	10	50.62	50.00	101.2	76-120		08/18/1999	0306
909165-1			10	52.51	50.00	105.0	76-120		08/18/1999	0338
909165-1		MS	10	52.22	50.00	104.4	76-120		08/18/1999	0408
909165-1		MSD	10	51.90	50.00	103.8	76-120		08/18/1999	0439
909264-1				51.45	50.00	102.9	76-120		08/18/1999	0511
909264-3				53.51	50.00	107.0	76-120		08/18/1999	0542
909264-4				50.48	50.00	101.0	76-120		08/18/1999	0613
		MB		50.70	50.00	101.4	76-120		08/18/1999	0843
		LCS		51.34	50.00	102.7	76-120		08/18/1999	0914
909219-1				52.09	50.00	104.2	76-120		08/18/1999	0945
909244-2				50.94	50.00	101.9	76-120		08/18/1999	1050
909244-2		MS		51.38	50.00	102.8	76-120		08/18/1999	1121
909244-2		MSD		51.84	50.00	103.7	76-120		08/18/1999	1153
909244-1				49.64	50.00	99.3	76-120		08/18/1999	1224

Surrogate	Units
BFB (Surrogate)	ug/L

Lab ID	Matrix	QC Type	Dilution	Result	True Value	Percent Recovery	Limits	Flag	Date	Time
909162-1			10	51.18	50.00	102.4	85-115		08/18/1999	0204
909162-1		MS	10	52.42	50.00	104.8	85-115		08/18/1999	0235
909162-1		MSD	10	51.73	50.00	103.5	85-115		08/18/1999	0306
909165-1			10	52.83	50.00	105.7	85-115		08/18/1999	0338
909165-1		MS	10	51.66	50.00	103.3	85-115		08/18/1999	0408
909165-1		MSD	10	51.89	50.00	103.8	85-115		08/18/1999	0439
909264-1				52.01	50.00	104.0	85-115		08/18/1999	0511
909264-3				51.26	50.00	102.5	85-115		08/18/1999	0542
909264-4				51.79	50.00	103.6	85-115		08/18/1999	0613
		MB		51.27	50.00	102.5	85-115		08/18/1999	0843
		LCS		51.82	50.00	103.6	85-115		08/18/1999	0914
909219-1				50.71	50.00	101.4	85-115		08/18/1999	0945
909244-2				52.11	50.00	104.2	85-115		08/18/1999	1050
909244-2		MS		52.37	50.00	104.7	85-115		08/18/1999	1121
909244-2		MSD		52.82	50.00	105.6	85-115		08/18/1999	1153
909244-1				52.99	50.00	106.0	85-115		08/18/1999	1224

CORE LABORATORIES

SURROGATE RECOVERIES REPORT

Job Number.: 909264

Report Date.: 08/26/99

CUSTOMER: Marathon Oil Company | PROJECT: MOC - Bertha Barber | ATTN: Mr. Paul Peacock

Surrogate	Units
Toluene-d8	ug/L

Lab ID	Matrix	QC Type	Dilution	Result	True Value	Percent Recovery	Limits	Flag	Date	Time
909162-1			10	49.99	50.00	100.0	85-112		08/18/1999	0204
909162-1		MS	10	49.90	50.00	99.8	85-112		08/18/1999	0235
909162-1		MSD	10	49.94	50.00	99.9	85-112		08/18/1999	0306
909165-1			10	49.34	50.00	98.7	85-112		08/18/1999	0338
909165-1		MS	10	49.68	50.00	99.4	85-112		08/18/1999	0408
909165-1		MSD	10	49.41	50.00	98.8	85-112		08/18/1999	0439
909264-1				49.53	50.00	99.1	85-112		08/18/1999	0511
909264-3				51.27	50.00	102.5	85-112		08/18/1999	0542
909264-4				50.33	50.00	100.7	85-112		08/18/1999	0613
		MB		50.07	50.00	100.1	85-112		08/18/1999	0843
		LCS		49.24	50.00	98.5	85-112		08/18/1999	0914
909219-1				49.54	50.00	99.1	85-112		08/18/1999	0945
909244-2				49.80	50.00	99.6	85-112		08/18/1999	1050
909244-2		MS		49.68	50.00	99.4	85-112		08/18/1999	1121
909244-2		MSD		50.60	50.00	101.2	85-112		08/18/1999	1153
909244-1				49.92	50.00	99.8	85-112		08/18/1999	1224

Method.....: Volatile Organic Compounds
Method Code.....: 826TCL

Batch.....: 45057
Analyst.....: weh

Surrogate	Units
1,2-Dichloroethane-d4 (surrogate)	ug/L

Lab ID	Matrix	QC Type	Dilution	Result	True Value	Percent Recovery	Limits	Flag	Date	Time
		MB		49.99	50.00	100.0	76-120		08/18/1999	0818
		LCS		49.18	50.00	98.4	76-120		08/18/1999	0849
909264-7				51.40	50.00	102.8	76-120		08/18/1999	0920
909264-8				53.02	50.00	106.0	76-120		08/18/1999	0951
909264-8		MS		50.24	50.00	100.5	76-120		08/18/1999	1022
909264-8		MSD		51.61	50.00	103.2	76-120		08/18/1999	1053
909264-9				51.57	50.00	103.1	76-120		08/18/1999	1124
909264-10				51.16	50.00	102.3	76-120		08/18/1999	1156
909296-1			5	53.53	50.00	107.1	76-120		08/19/1999	0129
909292-2			5	52.25	50.00	104.5	76-120		08/19/1999	0200
909264-5			10	48.27	50.00	96.5	76-120		08/19/1999	0308
909263-1				51.59	50.00	103.2	76-120		08/19/1999	1227
909295-1				49.47	50.00	98.9	76-120		08/19/1999	1258

CORE LABORATORIES

SURROGATE RECOVERIES REPORT

Job Number.: 909264

Report Date.: 08/26/99

CUSTOMER: Marathon Oil Company | PROJECT: MOC - Bertha Barber | ATTN: Mr. Paul Peacock

Surrogate	Units
BFB (Surrogate)	ug/L

Lab ID	Matrix	QC Type	Dilution	Result	True Value	Percent Recovery	Limits	Flag	Date	Time
		MB		50.96	50.00	101.9	85-115		08/18/1999	0818
		LCS		51.80	50.00	103.6	85-115		08/18/1999	0849
909264-7				51.39	50.00	102.8	85-115		08/18/1999	0920
909264-8				53.37	50.00	106.7	85-115		08/18/1999	0951
909264-8		MS		51.78	50.00	103.6	85-115		08/18/1999	1022
909264-8		MSD		51.01	50.00	102.0	85-115		08/18/1999	1053
909264-9				52.54	50.00	105.1	85-115		08/18/1999	1124
909264-10				54.03	50.00	108.1	85-115		08/18/1999	1156
909296-1			5	52.74	50.00	105.5	85-115		08/19/1999	0129
909292-2			5	50.08	50.00	100.2	85-115		08/19/1999	0200
909264-5			10	51.41	50.00	102.8	85-115		08/19/1999	0308
909263-1				52.51	50.00	105.0	85-115		08/19/1999	1227
909295-1				51.83	50.00	103.7	85-115		08/19/1999	1258

Surrogate	Units
Toluene-d8	ug/L

Lab ID	Matrix	QC Type	Dilution	Result	True Value	Percent Recovery	Limits	Flag	Date	Time
		MB		50.26	50.00	100.5	85-112		08/18/1999	0818
		LCS		49.64	50.00	99.3	85-112		08/18/1999	0849
909264-7				50.13	50.00	100.3	85-112		08/18/1999	0920
909264-8				49.40	50.00	98.8	85-112		08/18/1999	0951
909264-8		MS		50.00	50.00	100.0	85-112		08/18/1999	1022
909264-8		MSD		50.33	50.00	100.7	85-112		08/18/1999	1053
909264-9				49.73	50.00	99.5	85-112		08/18/1999	1124
909264-10				49.66	50.00	99.3	85-112		08/18/1999	1156
909296-1			5	49.60	50.00	99.2	85-112		08/19/1999	0129
909292-2			5	53.19	50.00	106.4	85-112		08/19/1999	0200
909264-5			10	50.38	50.00	100.8	85-112		08/19/1999	0308
909263-1				49.95	50.00	99.9	85-112		08/19/1999	1227
909295-1				50.02	50.00	100.0	85-112		08/19/1999	1258

Method.....: Volatile Organic Compounds
Method Code.....: 826TCL

Batch.....: 45124
Analyst.....: weh

Surrogate	Units
1,2-Dichloroethane-d4 (surrogate)	ug/L

Lab ID	Matrix	QC Type	Dilution	Result	True Value	Percent Recovery	Limits	Flag	Date	Time
909164-1			10	48.28	50.00	96.6	76-120		08/19/1999	0107
909164-1		MS	10	47.64	50.00	95.3	76-120		08/19/1999	0139
909164-1		MSD	10	48.22	50.00	96.4	76-120		08/19/1999	0210
909299-4			40000	48.27	50.00	96.5	76-120		08/19/1999	0510

CORE LABORATORIES

SURROGATE RECOVERIES REPORT

Job Number.: 909264

Report Date.: 08/26/99

CUSTOMER: Marathon Oil Company | PROJECT: MOC - Bertha Barber | ATTN: Mr. Paul Peacock

Surrogate	Units
1,2-Dichloroethane-d4 (surrogate)	ug/L

Lab ID	Matrix	QC Type	Dilution	Result	True Value	Percent Recovery	Limits	Flag	Date	Time
		MB		45.14	50.00	90.3	76-120		08/19/1999	0925
		LCS		46.11	50.00	92.2	76-120		08/19/1999	0956
909264-6				48.78	50.00	97.6	76-120		08/19/1999	1027
909264-2				48.60	50.00	97.2	76-120		08/19/1999	1058
909264-5			100	46.38	50.00	92.8	76-120		08/19/1999	1132

Surrogate	Units
BFB (Surrogate)	ug/L

Lab ID	Matrix	QC Type	Dilution	Result	True Value	Percent Recovery	Limits	Flag	Date	Time
909164-1			10	50.18	50.00	100.4	85-115		08/19/1999	0107
909164-1		MS	10	50.52	50.00	101.0	85-115		08/19/1999	0139
909164-1		MSD	10	50.68	50.00	101.4	85-115		08/19/1999	0210
909299-4			40000	48.81	50.00	97.6	85-115		08/19/1999	0510
		MB		50.43	50.00	100.9	85-115		08/19/1999	0925
		LCS		49.79	50.00	99.6	85-115		08/19/1999	0956
909264-6				51.02	50.00	102.0	85-115		08/19/1999	1027
909264-2				50.59	50.00	101.2	85-115		08/19/1999	1058
909264-5			100	50.56	50.00	101.1	85-115		08/19/1999	1132

Surrogate	Units
Toluene-d8	ug/L

Lab ID	Matrix	QC Type	Dilution	Result	True Value	Percent Recovery	Limits	Flag	Date	Time
909164-1			10	49.83	50.00	99.7	85-112		08/19/1999	0107
909164-1		MS	10	50.22	50.00	100.4	85-112		08/19/1999	0139
909164-1		MSD	10	50.40	50.00	100.8	85-112		08/19/1999	0210
909299-4			40000	49.71	50.00	99.4	85-112		08/19/1999	0510
		MB		50.15	50.00	100.3	85-112		08/19/1999	0925
		LCS		50.60	50.00	101.2	85-112		08/19/1999	0956
909264-6				50.20	50.00	100.4	85-112		08/19/1999	1027
909264-2				50.70	50.00	101.4	85-112		08/19/1999	1058
909264-5			100	50.13	50.00	100.3	85-112		08/19/1999	1132

CORE LABORATORIES

SURROGATE RECOVERIES REPORT

Job Number.: 909264

Report Date.: 08/26/99

CUSTOMER: Marathon Oil Company | PROJECT: MOC - Bertha Barber | ATTN: Mr. Paul Peacock

Method.....: Polynuclear Aromatic Hydrocarbons-HPLC
Method Code.....: 8310

Batch.....: 45231
Analyst.....: rm

Surrogate	Units
1-Fluoronaphthalene	ug/L

Lab ID	Matrix	QC Type	Dilution	Result	True Value	Percent Recovery	Limits	Flag	Date	Time
		MB		430.2	1000	43.0	10-74		08/20/1999	2141
		LCS		233.8	1000	23.4	10-74		08/20/1999	2223
909264-1				311.3	1000	31.1	10-74		08/20/1999	2305
909264-3				506.1	1000	50.6	10-74		08/21/1999	0030
909264-4				541.6	1000	54.2	10-74		08/21/1999	0112
909264-5				573.5	1000	57.4	10-74		08/21/1999	0154
909264-6				539.7	1000	54.0	10-74		08/21/1999	0237
909264-7				276.7	1000	27.7	10-74		08/21/1999	0319
909264-8				553.5	1000	55.4	10-74		08/21/1999	0401
909264-9				569.6	1000	57.0	10-74		08/21/1999	0526
909264-10				492.3	1000	49.2	10-74		08/21/1999	0608
909313-2				248.1	1000	24.8	10-74		08/21/1999	0651
909313-2		MS		350.0	1000	35.0	10-74		08/21/1999	0733
909313-2		MSD		334.3	1000	33.4	10-74		08/21/1999	0815
909318-1				188.9	1000	18.9	10-74		08/21/1999	0858
909318-2				201.6	1000	20.2	10-74		08/21/1999	0940
909319-1				161.8	1000	16.2	10-74		08/21/1999	1022
909270-25			10	ND	1000	0.0	10-74	X	08/21/1999	1104
909270-25			10	ND	1000	0.0	10-74	X	08/21/1999	1147

Surrogate	Units
Terphenyl-d14	ug/L

Lab ID	Matrix	QC Type	Dilution	Result	True Value	Percent Recovery	Limits	Flag	Date	Time
		MB		1082.4	1000	108.2	56-122		08/20/1999	2141
		LCS		860.6	1000	86.1	56-122		08/20/1999	2223
909264-1				571.9	1000	57.2	56-122		08/20/1999	2305
909264-3				764.7	1000	76.5	56-122		08/21/1999	0030
909264-4				1698.7	1000	169.9	56-122	X	08/21/1999	0112
909264-5				1489.0	1000	148.9	56-122	X	08/21/1999	0154
909264-6				1772.7	1000	177.3	56-122	X	08/21/1999	0237
909264-7				564.6	1000	56.5	56-122		08/21/1999	0319
909264-8				975.5	1000	97.5	56-122		08/21/1999	0401
909264-9				830.8	1000	83.1	56-122		08/21/1999	0526
909264-10				792.6	1000	79.3	56-122		08/21/1999	0608
909313-2				671.3	1000	67.1	56-122		08/21/1999	0651
909313-2		MS		852.2	1000	85.2	56-122		08/21/1999	0733
909313-2		MSD		635.6	1000	63.6	56-122		08/21/1999	0815
909318-1				766.4	1000	76.6	56-122		08/21/1999	0858
909318-2				715.4	1000	71.5	56-122		08/21/1999	0940
909319-1				700.7	1000	70.1	56-122		08/21/1999	1022
909270-25			10	99.3	1000	9.9	56-122	X	08/21/1999	1104
909270-25			10	176.9	1000	17.7	56-122	X	08/21/1999	1147

CORE LABORATORIES

SURROGATE RECOVERIES REPORT

Job Number.: 909264

Report Date.: 08/26/99

CUSTOMER: Marathon Oil Company | PROJECT: MOC - Bertha Barber | ATTN: Mr. Paul Peacock

Method.....: Polynuclear Aromatic Hydrocarbons-HPLC
Method Code.....: 8310

Batch.....: 45399
Analyst.....: rm

Surrogate	Units
1-Fluoronaphthalene	ug/L

Lab ID	Matrix	QC Type	Dilution	Result	True Value	Percent Recovery	Limits	Flag	Date	Time
		MB		434.1	1000	43.4	10-74		08/24/1999	1715
		LCS		605.4	1000	60.5	10-74		08/24/1999	1758
909264-2				423.3	1000	42.3	10-74		08/24/1999	1840
909333-1				4504.3	1000	450.4	10-74	X	08/24/1999	1922
909333-2				495.4	1000	49.5	10-74		08/24/1999	2004
909333-3				435.4	1000	43.5	10-74		08/24/1999	2047
909333-4				724.6	1000	72.5	10-74		08/24/1999	2129
909333-5				2070.1	1000	207.0	10-74	X	08/24/1999	2211
909333-6				672.3	1000	67.2	10-74		08/24/1999	2254
909333-7				1643.3	1000	164.3	10-74	X	08/24/1999	2336
909333-8				1474.9	1000	147.5	10-74	X	08/25/1999	0018
909333-9				794.9	1000	79.5	10-74	X	08/25/1999	0101
909333-10				1695.6	1000	169.6	10-74	X	08/25/1999	0225
909427-1				502.7	1000	50.3	10-74		08/25/1999	0307
909427-2				469.0	1000	46.9	10-74		08/25/1999	0350
909366-1				354.1	1000	35.4	10-74		08/25/1999	0432
909366-1		MS		455.9	1000	45.6	10-74		08/25/1999	0514
909366-1		MSD		456.2	1000	45.6	10-74		08/25/1999	0557

Surrogate	Units
Terphenyl-d14	ug/L

Lab ID	Matrix	QC Type	Dilution	Result	True Value	Percent Recovery	Limits	Flag	Date	Time
		MB		819.8	1000	82.0	56-122		08/24/1999	1715
		LCS		855.5	1000	85.5	56-122		08/24/1999	1758
909264-2				609.9	1000	61.0	56-122		08/24/1999	1840
909333-1				821.4	1000	82.1	56-122		08/24/1999	1922
909333-2				909.4	1000	90.9	56-122		08/24/1999	2004
909333-3				865.8	1000	86.6	56-122		08/24/1999	2047
909333-4				926.7	1000	92.7	56-122		08/24/1999	2129
909333-5				943.5	1000	94.3	56-122		08/24/1999	2211
909333-6				910.9	1000	91.1	56-122		08/24/1999	2254
909333-7				929.8	1000	93.0	56-122		08/24/1999	2336
909333-8				857.5	1000	85.8	56-122		08/25/1999	0018
909333-9				876.1	1000	87.6	56-122		08/25/1999	0101
909333-10				867.5	1000	86.8	56-122		08/25/1999	0225
909427-1				677.2	1000	67.7	56-122		08/25/1999	0307
909427-2				833.2	1000	83.3	56-122		08/25/1999	0350
909366-1				831.5	1000	83.2	56-122		08/25/1999	0432
909366-1		MS		848.0	1000	84.8	56-122		08/25/1999	0514
909366-1		MSD		954.3	1000	95.4	56-122		08/25/1999	0557

rpjsckl

Job Sample Receipt Checklist Report
08/18/99

V2

Job Number.....: 909264 Location.: 57211 Customer Job ID.....: Job Check List Date.: 08/18/99
Project Number.: 96000703 Project Description.: MOC - Bertha Barber Project Manager.....: lpa
Customer.....: Marathon Oil Company Contact.: Mr. Paul Peacock

Questions ?	(Y/N)	Comments
Chain-of-Custody Present?.....	Y	
Custody seal on shipping container?.....	N	
...If "yes", custody seal intact?.....		
Custody seals on sample containers?.....		
...If "yes", custody seal intact?.....		
Samples chilled?.....	N	
Temperature of cooler acceptable? (4 deg C +/- 2).		
Samples received intact (good condition)?.....	Y	
Volatile samples acceptable? (no headspace).....	Y	
Correct containers used?.....	Y	
Adequate sample volume provided?.....	Y	
Samples preserved correctly?.....	Y	
Samples received within holding-time?.....	Y	
Agreement between COC and sample labels?.....	Y	
Additional.....		MW7,MW11 TDS/Cl BOTTLES OPENED IN TRANSIT.
Comments.....		SUBSAMPLED FROM PNA BOTTLE
Sample Custodian Signature.....		

CORE LAB

CORE LABORATORIES, INC.

No. 188361

CHAIN OF CUSTODY RECORD

CUSTOMER INFORMATION	PROJECT INFORMATION
COMPANY: Marathon Oil Co.	PROJECT NAME/NUMBER: Bertha Barber
SEND REPORT TO: M. Paul Peacock	BILLING INFORMATION
ADDRESS: P.O. Box 552	BILL TO: Marathon Oil Co
Midland, Tx	ADDRESS: same
79702-0552	
PHONE: (915) 682-1626	PHONE:
FAX: 687-8305	FAX: PO NO.:

pg. 1 & 4

LAB JOB NO. 909264

SAMPLE NO.	SAMPLE DESCRIPTION	SAMPLE DATE	SAMPLE TIME	SAMPLE MATRIX	CONTAINER	PRESERV.	NUMBER OF CONTAINERS	Gen Chem (TDS, Chlorides)*	PAH	BTEX	Metals (TCLP)*	* F, NO3, SO4				REMARKS / PRECAUTIONS
1	MW-06.01	8/17/99	11:15	water	1000 plastic	N/A	1	✓								
	MW-06.02	8/17/99	10:55		amber 1L	N/A	2		✓							
	MW-06.03	8/17/99	11:05		VOA 40	HCl	3			✓						
	MW-06.04	8/17/99	11:00		1000 plastic	HNO_3	1				✓					
2	MW-07.01		11:55		1000 plastic	N/A	1	✓								
	MW-07.02		11:50		amber 1L	N/A	2		✓							
	MW-07.03		12:00		VOA 40	HCl	3			✓						
	MW-07.04		11:57		1000 plastic	HNO_3	1				✓					
3	MW-08.01		12:15		1000 plastic	N/A	1	✓								
	MW-08.02		12:10		amber 1L		2		✓							

SAMPLER: Allen Hodge

SHIPMENT METHOD:

AIRBILL NO.:

REQUIRED TURNAROUND:* ☐ SAME DAY ☐ 24 HOURS ☐ 48 HOURS ☐ 72 HOURS ☐ 5 DAYS ☐ 10 DAYS ☑ ROUTINE OTHER

1. RELINQUISHED BY:	DATE	2. RELINQUISHED BY:	DATE	3. RELINQUISHED BY:	DATE
SIGNATURE: [signature]	8/17/99	SIGNATURE:		SIGNATURE:	
PRINTED NAME/COMPANY:	TIME 1730	PRINTED NAME/COMPANY:	TIME	PRINTED NAME/COMPANY:	TIME
1. RECEIVED BY:	DATE	**2. RECEIVED BY:**	DATE	**3. RECEIVED BY:**	DATE
SIGNATURE: Jam Bobs	8/18/99	SIGNATURE:		SIGNATURE:	
PRINTED NAME/COMPANY: JB Corp	TIME 1100	PRINTED NAME/COMPANY:	TIME	PRINTED NAME/COMPANY:	TIME

* RUSH TURNAROUND MAY REQUIRE SURCHARGE

☐ Anaheim, CA
1250 E. Gene Autry Way
Anaheim, CA 92805
(714) 937-1094 Fax (714) 937-1170

☐ Houston, TX (Env)
6310 Rothway Drive
Houston, TX 77040
(713) 690-4444 Fax (713) 690-5646

☐ Aurora, CO
10703 E. Bethany Drive
Aurora, CO 80014
(303) 751-1780 Fax (303) 751-1784

☐ Houston, TX (Pet)
8210 Mosley Road
Houston, TX 77075
(713) 943-9776 Fax (713) 943-3846

☐ Casper, WY
420 W. First Street
Casper, WY 82601
(307) 235-5741 Fax (307) 266-1676

☐ Lake Charles, LA
3645 Beglis Parkway
Sulphur, LA 70663
(318) 583-4926 Fax (318) 583-4929

☐ Corpus Christi, TX
1733 N. Padre Island Drive
Corpus Christi, TX 78408
(361) 289-2673 Fax (361) 289-2471

☐ Valparaiso, IN
2400 Cumberland Drive
Valparaiso, IN 46383
(219) 464-2389 Fax (219) 462-2953

ORIGINAL

CORE LAB

CORE LABORATORIES, INC.

No. 188369

CHAIN OF CUSTODY RECORD

Pg. 2 of 4

CUSTOMER INFORMATION	PROJECT INFORMATION
COMPANY: Marathon Oil Co	PROJECT NAME/NUMBER: Bertha Barber
SEND REPORT TO: M. Paul Peacock	BILLING INFORMATION
ADDRESS: P.O. Box 552	BILL TO: Marathon Oil Co
Midland, Tx	ADDRESS:
79702-0552	
PHONE: (915) 682-1626	PHONE:
FAX: 687-8305	FAX: PO NO.:

LAB JOB NO. 909264

SAMPLE NO.	SAMPLE DESCRIPTION	SAMPLE DATE	SAMPLE TIME	SAMPLE MATRIX	CONTAINER	PRESERV.	NUMBER OF CONTAINERS	Gen Chem (TDS, Chloride)	PAH	BTEX	Metals (TCLP)					REMARKS / PRECAUTIONS
	MW-08.03	8/17/99	12:20	water	VOA 40ml	HCl	3			✓						
	MW-08.04		12:39		1000 plastic	HNO_3	1				✓					
4	MW-09.01		12:50		1000 plastic	N/A	1	✓								
	MW-09.02		12:55		amber 1L	N/A	2		✓							
	MW-09.03		1300		VOA 40	HCl	3			✓						
	MW-09.04		1310		1000 plastic	HNO_3	1				✓					
5	MW-10.01		1335		1000 plastic	N/A	1	✓								
	MW-10.02		1340		amber 1L	N/A	2		✓							
	MW-10.03		1345		VOA 40	HCl	3			✓						
	MW-10.04		1350		1000 plastic	HNO_3	1				✓					

SAMPLER: Allen Hodge

SHIPMENT METHOD:

AIRBILL NO.:

REQUIRED TURNAROUND:* ☐ SAME DAY ☐ 24 HOURS ☐ 48 HOURS ☐ 72 HOURS ☐ 5 DAYS ☐ 10 DAYS ☑ ROUTINE OTHER

1. RELINQUISHED BY:	DATE	2. RELINQUISHED BY:	DATE	3. RELINQUISHED BY:	DATE
SIGNATURE: [signature]	8/17/99	SIGNATURE:		SIGNATURE:	
PRINTED NAME/COMPANY:	TIME 1730	PRINTED NAME/COMPANY:	TIME	PRINTED NAME/COMPANY:	TIME
1. RECEIVED BY:	DATE	2. RECEIVED BY:	DATE	3. RECEIVED BY:	DATE
SIGNATURE: Jan Bob	8/18/99	SIGNATURE:		SIGNATURE:	
PRINTED NAME/COMPANY: JB Corr	TIME 1100	PRINTED NAME/COMPANY:	TIME	PRINTED NAME/COMPANY:	TIME

RUSH TURNAROUND MAY REQUIRE SURCHARGE

☐ Anaheim, CA
1250 E. Gene Autry Way
Anaheim, CA 92805
(714) 937-1094 Fax (714) 937-1170

☐ Houston, TX (Env)
6310 Rothway Drive
Houston, TX 77040
(713) 690-4444 Fax (713) 690-5646

☐ Aurora, CO
10703 E. Bethany Drive
Aurora, CO 80014
(303) 751-8780 Fax (303) 751-1784

☐ Houston, TX (Pet)
8210 Mosley Road
Houston, TX 77075
(713) 943-9776 Fax (713) 943-3846

☐ Casper, WY
420 W. First Street
Casper, WY 82601
(307) 235-5741 Fax (307) 266-1676

☐ Lake Charles, LA
3645 Beglis Parkway
Sulphur, LA 70663
(318) 583-4926 Fax (318) 583-4929

☐ Corpus Christi, TX
1733 N. Padre Island Drive
Corpus Christi, TX 78408
(361) 289-2673 Fax (361) 289-2471

☐ Valparaiso, IN
2400 Cumberland Drive
Valparaiso, IN 46383
(219) 464-2389 Fax (219) 462-2953

ORIGINAL

CORE LAB

CORE LABORATORIES, INC.

No. 188368

CHAIN OF CUSTODY RECORD

CUSTOMER INFORMATION	PROJECT INFORMATION
COMPANY: Marathon Oil Co	PROJECT NAME/NUMBER: Bertha Barber
SEND REPORT TO: M. Paul Peacock	BILLING INFORMATION
ADDRESS: P.O. Box 552	BILL TO: Marathon Oil Co.
Midland, Tx	ADDRESS: Same
79702-0552	
PHONE: (915) 682-1626	PHONE:
FAX: 687-8305	FAX: PO NO.:

Pg. 3 of 4

LAB JOB NO. 909284

SAMPLE NO.	SAMPLE DESCRIPTION	SAMPLE DATE	SAMPLE TIME	SAMPLE MATRIX	CONTAINER	PRESERV.	NUMBER OF CONTAINERS	Gen Chem (TDS, Chlorides)	PAH	BTEX	Metals (TCLP)	REMARKS / PRECAUTIONS
4	MW-11.01	8/17/99	1400	water	1000 plastic	N/A	1	✓				
	MW-11.02		1405		amber 1L	NA	2		✓			
	MW-11.03		1410		VOA 40	HCl	3			✓		
	MW-11.04		1420		1000 plastic	HNO_3	1				✓	
7 AH 8-17-99	~~MW-12.01 PZ1.01~~		1430		1000 plastic	N/A	1	✓				
	~~MW-12.02 PZ1.02~~		1438		amber 1L	NA	2		✓			
	~~MW-12.03 PZ1.03~~		1435		VOA 40	HCl	3			✓		
	~~MW-12.04 PZ1.04~~		1448		1000 plastic	HNO_3	1				✓	
8	PZ2.01		1505		1000 plastic	N/A	1	✓				
	PZ2.02		1510		amber 1L	NA	2		✓			

SAMPLER: Allen Hodge

SHIPMENT METHOD:

AIRBILL NO.:

REQUIRED TURNAROUND:* ☐ SAME DAY ☐ 24 HOURS ☐ 48 HOURS ☐ 72 HOURS ☐ 5 DAYS ☐ 10 DAYS ☑ ROUTINE OTHER

1. RELINQUISHED BY:	DATE	2. RELINQUISHED BY:	DATE	3. RELINQUISHED BY:	DATE
SIGNATURE: [signature]	8/19/99	SIGNATURE:		SIGNATURE:	
PRINTED NAME/COMPANY:	TIME 1120	PRINTED NAME/COMPANY:	TIME	PRINTED NAME/COMPANY:	TIME
1. RECEIVED BY:	**DATE**	**2. RECEIVED BY:**	**DATE**	**3. RECEIVED BY:**	**DATE**
SIGNATURE: Jim Bob	8/18/99	SIGNATURE:		SIGNATURE:	
PRINTED NAME/COMPANY: JB Co	TIME 1130	PRINTED NAME/COMPANY:	TIME	PRINTED NAME/COMPANY:	TIME

☐ **Anaheim, CA** 1250 E. Gene Autry Way, Anaheim, CA 92805, (714) 937-1094 Fax (714) 937-1170

☐ **Houston, TX (Env)** 6310 Rothway Drive, Houston, TX 77040, (713) 690-4444 Fax (713) 690-5646

☐ **Aurora, CO** 10703 E. Bethany Drive, Aurora, CO 80014, (303) 751-1780 Fax (303) 751-1784

☐ **Houston, TX (Pet)** 8210 Mosley Road, Houston, TX 77075, (713) 943-9776 Fax (713) 943-3846

☐ **Casper, WY** 420 W. First Street, Casper, WY 82601, (307) 235-5741 Fax (307) 266-1676

☐ **Lake Charles, LA** 3645 Beglis Parkway, Sulphur, LA 70663, (318) 583-4926 Fax (318) 583-4929

☐ **Corpus Christi, TX** 1733 N. Padre Island Drive, Corpus Christi, TX 78408, (361) 289-2673 Fax (361) 289-2471

☐ **Valparaiso, IN** 2400 Cumberland Drive, Valparaiso, IN 46383, (219) 464-2389 Fax (219) 462-2953

ORIGINAL

CORE LAB

CORE LABORATORIES, INC.

No. 188370

CHAIN OF CUSTODY RECORD

pg. 4 of 4

CUSTOMER INFORMATION		PROJECT INFORMATION	
COMPANY:	Marathon Oil Co	PROJECT NAME/NUMBER:	Bertha Barber
SEND REPORT TO:	M. Paul Peacock	BILLING INFORMATION	
ADDRESS:	PO Box 552	BILL TO:	Marathon Oil Co
	Midland, Tx	ADDRESS:	Same
	79702-0552		
PHONE:	915 682-1626	PHONE:	
FAX:	687-8305	FAX:	PO NO.:

LAB JOB NO. 909264

SAMPLE NO.	SAMPLE DESCRIPTION	SAMPLE DATE	SAMPLE TIME	SAMPLE MATRIX	CONTAINER	PRESERV.	NUMBER OF CONTAINERS	Gen Chem (TDS, Chloride)	DRO	BTEX	Metals (TCLP)	REMARKS / PRECAUTIONS
	PZ2.03	8/17/99	1515	Water	VOA 40	HCl	3			✓		
	PZ2.04		1535 ~~1448~~		1000 plastic	HNO_3	1				✓	
9	PZ3.01		1540		1000 plastic	N/A	1	✓				
	PZ3.02		1545		amber 1L	N/A	2		✓			
	PZ3.03		1550		VOA 40	HCl	3			✓		
	PZ3.04		1555		1000 plastic	HNO_3	1				✓	
10	PZ4.01		1610		1000 plastic	N/A	1	✓				
	PZ4.02		1615		amber 1L	N/A	2		✓			
	PZ4.03		1625		VOA 40	HCl	3			✓		
	PZ4.04		1630		1000 plastic	HNO_3	1				✓	

SAMPLER: Allen Hodge

SHIPMENT METHOD:

AIRBILL NO.:

REQUIRED TURNAROUND:* ☐ SAME DAY ☐ 24 HOURS ☐ 48 HOURS ☐ 72 HOURS ☐ 5 DAYS ☐ 10 DAYS ☑ ROUTINE OTHER

1. RELINQUISHED BY: SIGNATURE:	DATE 8/17/99	2. RELINQUISHED BY: SIGNATURE:	DATE	3. RELINQUISHED BY: SIGNATURE:	DATE
PRINTED NAME/COMPANY:	TIME 1730	PRINTED NAME/COMPANY:	TIME	PRINTED NAME/COMPANY:	TIME
1. RECEIVED BY: SIGNATURE:	DATE 8/18/99	2. RECEIVED BY: SIGNATURE:	DATE	3. RECEIVED BY: SIGNATURE:	DATE
PRINTED NAME/COMPANY: JB Co	TIME 1130	PRINTED NAME/COMPANY:	TIME	PRINTED NAME/COMPANY:	TIME

RUSH TURNAROUND MAY REQUIRE SURCHARGE

☐ **Anaheim, CA**
1250 E. Gene Autry Way
Anaheim, CA 92805
(714) 937-1094 Fax (714) 937-1170

☐ **Houston, TX (Env)**
6310 Rothway Drive
Houston, TX 77040
(713) 690-4444 Fax (713) 690-5616

☐ **Aurora, CO**
10703 E. Bethany Drive
Aurora, CO 80014
(303) 751-1780 Fax (303) 751-1784

☐ **Houston, TX (Pet)**
8210 Mosley Road
Houston, TX 77075
(713) 943-9776 Fax (713) 943-3846

☐ **Casper, WY**
420 W. First Street
Casper, WY 82601
(307) 235-5741 Fax (307) 266-1676

☐ **Lake Charles, LA**
3645 Beglis Parkway
Sulphur, LA 70663
(318) 583-4926 Fax (318) 583-4929

☐ **Corpus Christi, TX**
1733 N. Padre Island Drive
Corpus Christi, TX 78408
(361) 289-2673 Fax (361) 289-2471

☐ **Valparaiso, IN**
2400 Cumberland Drive
Valparaiso, IN 46383
(219) 464-2389 Fax (219) 462-2953

ORIGINAL

CORE LABORATORIES

QUALITY ASSURANCE FOOTER

METHOD REFERENCES

1. EPA SW-846, Test Methods for Evaluating Solid Waste Update I, IIA, IIB, III
2. Standard Methods for the Examination of Water and Wastewater, 18th Edition
3. EPA 600/4-79-020, Methods of Chemical Analysis for Waters and Wastes, March 1983
4. Federal Register, Friday, October 26, 1984 (40 CFR Part 136)
5. American Society for Testing and Materials, Volumes 5.01, 5.02, 5.03, 11.01,11.02,11.03,11.04
6. EPA Methods for Environmental Samples

COMMENTS

All methods of chemical analysis have a statistical uncertainty associated with the results. Unless otherwise indicated, the data in this report are within the limits of uncertainty as specified in the referenced method. Quality Control acceptance criteria are based either on actual laboratory performance or on limits specified in the referenced method. The date and time of analysis indicated on the QA report may not reflect the actual time of analysis for QC samples. All data are reported on an "as received" basis unless otherwise indicated. Data reported in the QA report may be lower than sample data due to dilution of samples into the calibration range of the analysis. Sample concentration for solid samples are calculated on an as received (wet) basis. Unless otherwise indicated, volatiles by gas chromatography (GC) are reported from a single column. Volatile analysis by GC on low level soil extractions are conducted at room temperature.

FLAGS, FOOTNOTES AND ABBREVIATIONS (as needed)

NA	=	Not Analyzed	ND	=	Not detected at a value greater than the reporting limit
N/A	=	Not applicable	NC	=	Not calculable due to values lower than the reporting limit
ug/L	=	Micrograms per liter	mg/L	=	Milligrams per liter
ug/Kg	=	Micrograms per kilogram	mg/kg	=	Milligrams per kilogram
U	=	Undetected			
J	=	Indicates value is > MDL, but < Reporting Limit			
B	=	Analyte was detected in the method blank analyzed with this sample.			
D	=	Surrogate recoveries are not calculated due to sample dilution.			
X	=	Surrogate recovery is outside quality control limits.			
Y	=	Spike or spike duplicate recovery is outside quality control limits.			
Z	=	Relative percent difference for a spike and spike duplicate is outside quality control limits. The precision of the method was impacted by matrix.			
^	=	Indicates value is above QC acceptance criteria.			

QC SAMPLE IDENTIFICATIONS

MB	=	Method Blank	SB	=	Storage Blank
RB	=	Reagent Blank	EB	=	Extraction Blank
PB	=	Preparation Blank	CALB	=	Calibration Blank
MD	=	Method Duplicate	RS	=	Reference Standard
LCS	=	Laboratory Control Sample	LCSD	=	Laboratory Control Sample Duplicate
MS	=	Matrix Spike	MSD	=	Matrix Spike Duplicate
ICB	=	Initial Calibration Blank	CCB	=	Continuing Calibration Blank
ICV	=	Initial Calibration Verification	ICB	=	Initial Calibration Blank
PDS	=	Post Digestion Spike	SS	=	Surrogate Spike
ISA	=	Interference Check standard "A"	ISB	=	Interference Check Standard "B"
ISCAB	=	Interference Check Sample AB	MSA	=	Method of Standard Additions
CAL	=	Calibration standard	SD	=	Serial Dilution
MST	=	TCLP Matrix Spike	MSQ	=	TCLP Matrix Spike Duplicate
PST	=	TCLP Post Digestion Spike	LCT	=	TCLP Laboratory Control Sample

SUBCONTRACTED LABORATORY LOCATIONS

CORE Laboratories:	Anaheim, California	*AN	Aurora, Colorado	*AU
	Casper, Wyoming	*CA	Corpus Christi, Texas	*CC
	Houston, Texas (Env)	*HE	Houston, Texas (Pet)	*HP
	Other (Detailed in Case Narrative)	*XX		

Appendix D

Monitoring Well Construction Details

Company Drilled for:					
MARATHON OIL CO.					
Location:					
BERTHA BARBER					
Depth: 50 FEET	Bore Size: 7.5 INCHES	Casing Size: 2INCH PVC	Casing Elevation: 2.17 AGS	Screen Size: .010	Top of Water Elevation: 33.43FEET

RHINO ENVIRONMENTAL SERVICES, INC.
1 (800) 762-0241

Monument Type Monitor Well Diagram

Job Number:	Installation Date:	Monitor Well Number:
RH99-AH20	8-3-99	MW-6

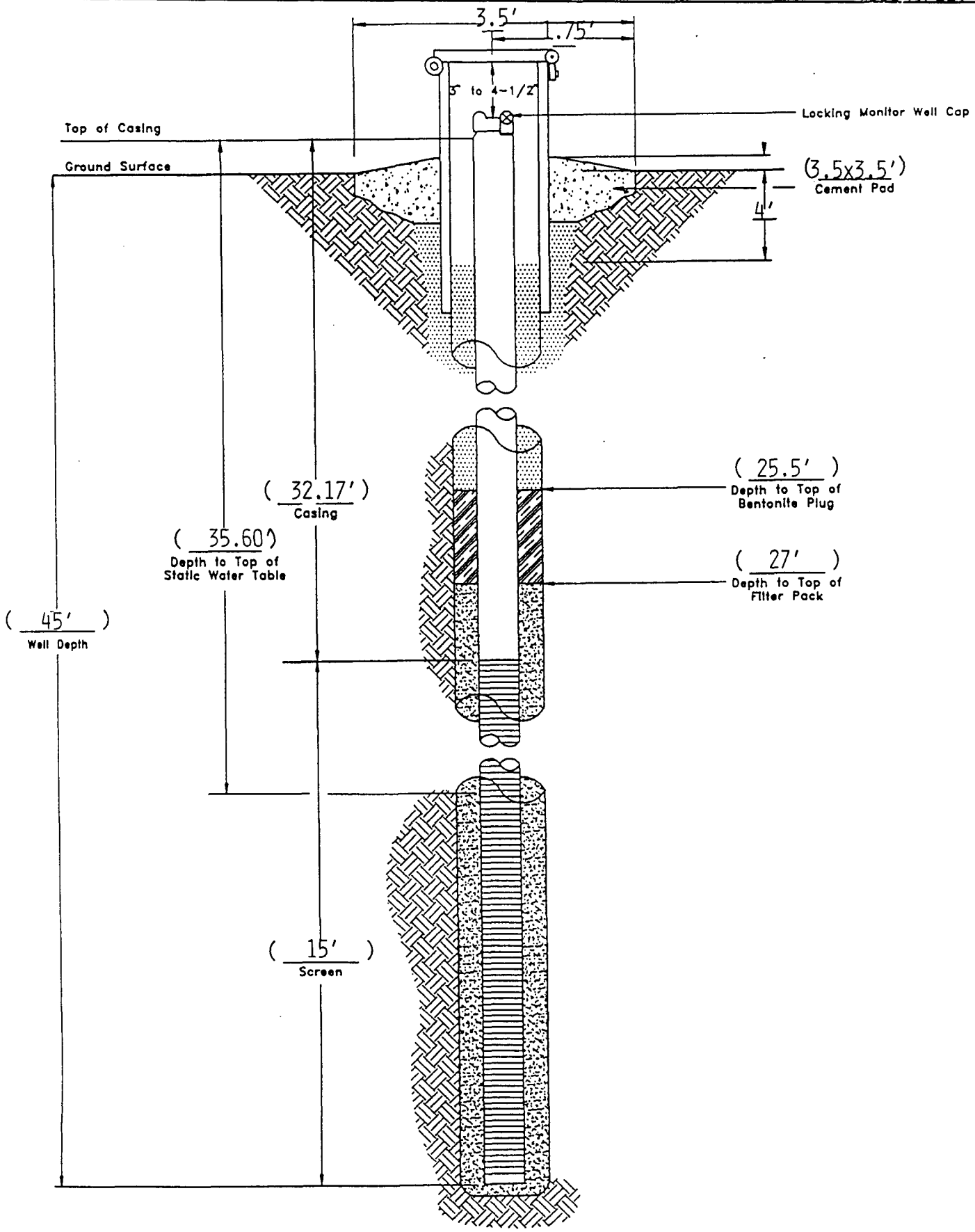

★ 8157

Company Drilled for:				
MARATHON OIL CO.	RHINO ENVIRONMENTAL SERVICES, INC. 1 (800) 762-0241			**Drilling Log**
Location: BERTHA BARBER	Well/Bore Number: MW-6	Date Drilled: 8-3-99	Driller: L.R.	Logged By: D.M.
Drilling Method: HOLLOW STEM AUGER	Depth of Boring: 50 FEET	Depth of Well: 45 FEET	Length of Casing: 32.17 FEET	Length of Screen: 15 FEET
Bore Diameter: 7.5 INCH	Casing Diameter: 2 INCH	Screen Diameter: 2 INCH	Slot Size: .010	Well Material: 2" SCH 40 PVC

Depth	Description	Sample Type	Depth	Construction
0	RED GRAY SAND VERY FINE TOP SOIL	CONTINUOUS CORE		CEMENT BACK TO SURFACE
5	LIGHT PINK SANDY CALICHE			
10				BACKFILL WITH CUTTINGS
15	HARD SANDY CALICHE			
20	RED SAND VERY SILTY SOME SANDSTONE			
25				CEMENT PLUG
30	CALICHE WITH LIMESTONE & SAND			BENTONITE PLUG
	TOP OF STATIC WATER			12-20 SAND FILTER PACK
35				
40				
45				
50	TD AT 50 FEET			TD AT 50 FEET
55				
60				
65				
70				
75				
80				
85				
90				
95				
100				
105				

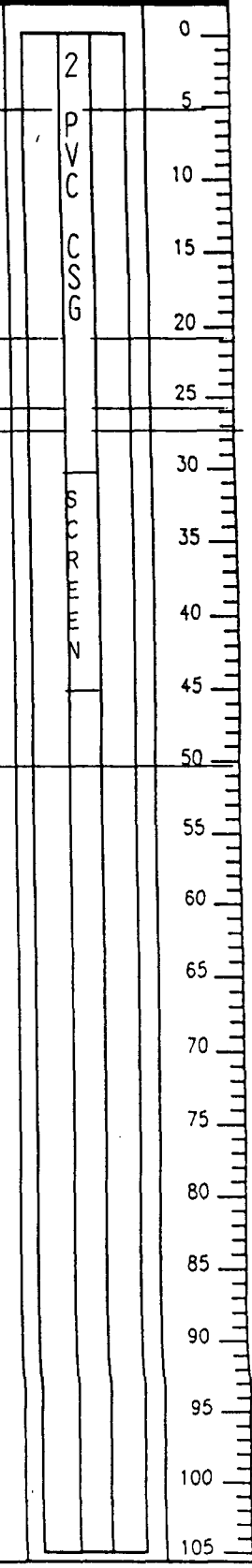

* 8155

Company Drilled for:					
MARATHON OIL CO.					
Location:					
BERTHA BARBER					
Depth: 49 FEET	Bore Size: 7.5 INCH	Casing Size: 2 INCH PVC	Casing Elevation: 3.21 AGS	Screen Size: .010	Top of Water Elevation: 34.88

RHINO ENVIRONMENTAL SERVICES, INC.
1 (800) 762-0241

Monument Type Monitor Well Diagram

Job Number:	Installation Date:	Monitor Well Number:
RH99-AH20	8-4-99	MW-7

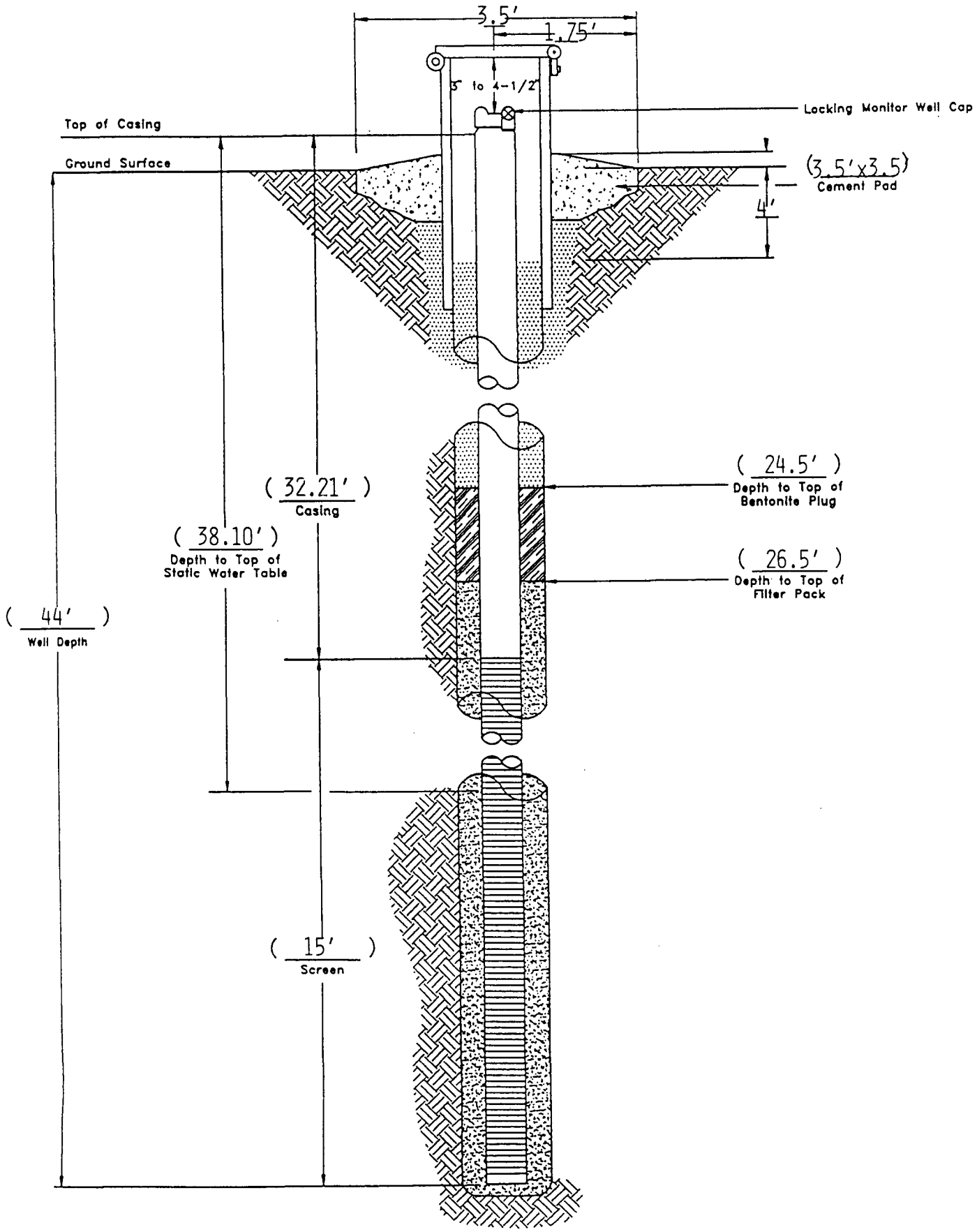

★ B157

Company Drilled for:				
MARATHON OIL CO.	RHINO ENVIRONMENTAL SERVICES, INC. 1 (800) 762-0241			**Drilling Log**
Location: BERTHA BARBER	Well/Bore Number: MW-7	Date Drilled: 8-3-99	Driller: L.R.	Logged By: D.M.
Drilling Method: HOLLOW STEM AUGER	Depth of Boring: 49 FEET	Depth of Well: 44 FEET	Length of Casing: 32.21 FEET	Length of Screen: 15 FEET
Bore Diameter: 7.5 INCH	Casing Diameter: 2 INCH	Screen Diameter: 2 INCH	Slot Size: .010	Well Material: 2" SCH 40 PVC

Depth	Description	Core	Sample	Construction
0	RED BROWN SAND TOP-SOIL	CONTINUOUS CORE		CEMENT BACK TO SURFACE
5	WHITE TO PINK CALICHE VERY SANDY			
10	CALICHE AS ABOVE			BACKFILL WITH CUTTINGS
15				
20	PINK SAND WITH CALICHE			CEMENT PLUG
25				BENTONITE PLUG
30	SANDSTONE STRINGERS AND CALICHE DARK GRAY TO BLACK STAIN VERY STRONG ODOR TOP OF STATIC WATER 34.88 FEET		28'-116 30'-43 32'-26 34' PID 8600	12-20 SAND FILTER PACK
35				
40				
45	TD AT 49 FEET			TD AT 49 FEET
50				
55				
60				
65				
70				
75				
80				
85				
90				
95				
100				
105				

★ 8155

Company Drilled for:					
MARATHON OIL CO.					
Location: BERTHA BARBER					
Depth: 50 FEET	Bore Size: 7.5 INCH	Casing Size: 2 INCH PVC	Casing Elevation: 2.80 AGS	Screen Size: .010	Top of Water Elevation: 34.35'

RHINO ENVIRONMENTAL SERVICES, INC.
1 (800) 762-0241

Monument Type Monitor Well Diagram

Job Number:	Installation Date:	Monitor Well Number:
RH99-AH20	8-4-99	MW-8

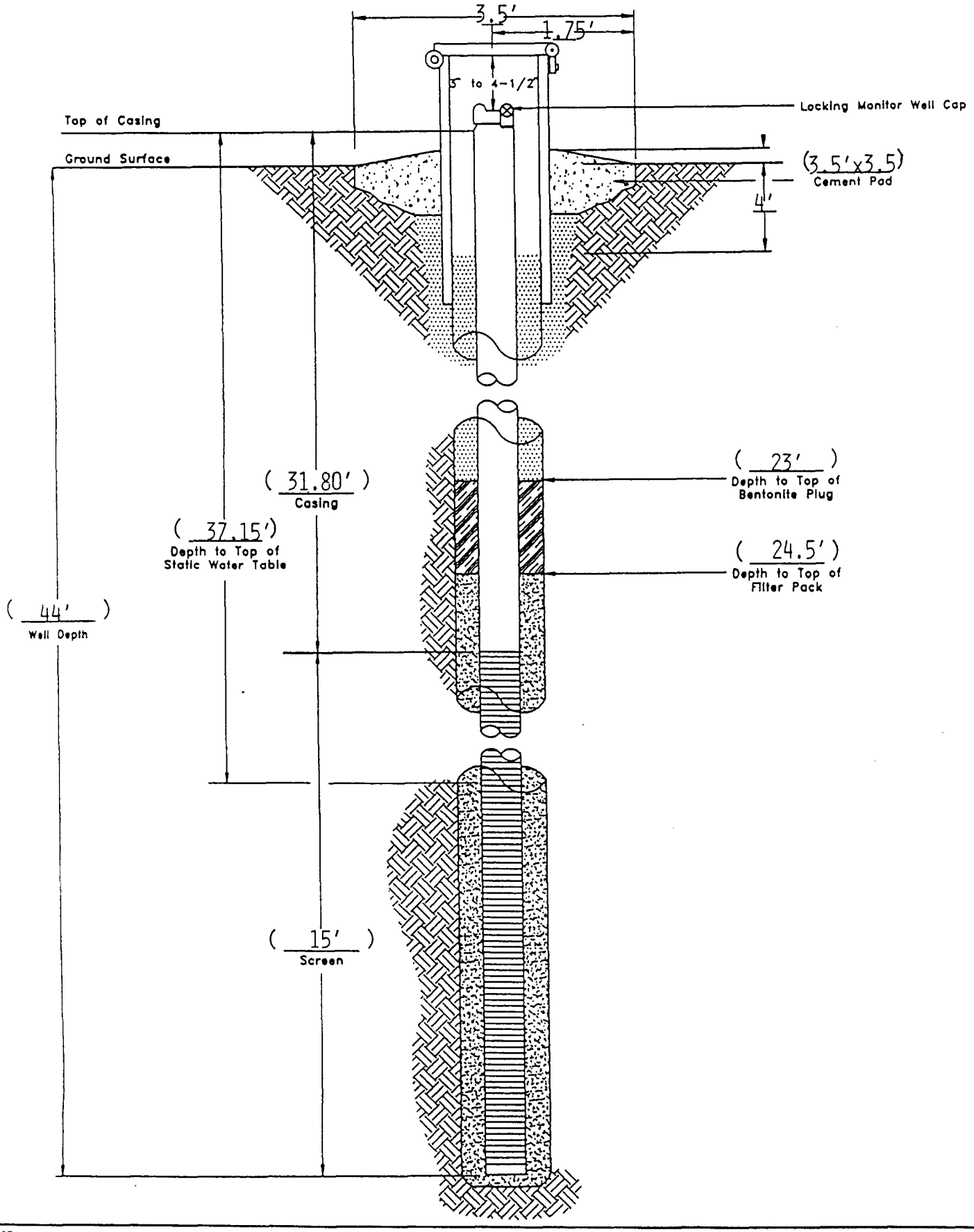

★ 8157

Company Drilled for:	RHINO ENVIRONMENTAL SERVICES, INC. 1 (800) 762-0241			Drilling Log
MARATHON OIL CO.				
Location: BERTHA BARBER	Well/Bore Number: MW-8	Date Drilled: 8-4-99	Driller: L.R.	Logged By: D.M.
Drilling Method: HOLLOW STEM AUGER	Depth of Boring: 50 FEET	Depth of Well: 44 FEET	Length of Casing: 31.80 FEET	Length of Screen: 15 FEET
Bore Diameter: 7.5 INCH	Casing Diameter: 2 INCH	Screen Diameter: 2 INCH	Slot Size: .010	Well Material: 2" SCH 40 PVC

Depth	Description	Sample	Depth	Construction
0	LIGHT BROWN SANDY TOP SOIL	CONTINUOUS CORE		CEMENT BACK TO SURFACE
5				
10	LIGHT BROWN TO YELLOW SAND VERY FINE SOME LOOSE CALICHE			BACKFILL WITH CUTTINGS
15				
20	YELLOW SANDY CALICHE		22'-.2	CEMENT PLUG
25	FINE BROWN SAND		26'-.5	BENTONITE PLUG
30			28'-1.4	12-20 SAND FILTER PACK
	TOP OF STATIC WATER		31'-3	
35	RED WATER SAND WITH SANDSTONE STRINGERS		34'-135	
40				
45				
50	TD AT 50 FEET			TD AT 50 FEET
55				
60				
65				
70				
75				
80				
85				
90				
95				
100				
105				

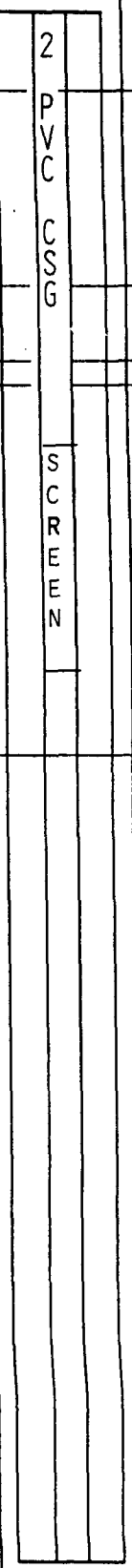

★ 8155

Company Drilled for:					
MARATHON OIL CO.	RHINO ENVIRONMENTAL SERVICES, INC. 1 (800) 762-0241				**Monument Type Monitor Well Diagram**
Location: BERTHA BARBER	Job Number: RH99-AH20	Installation Date: 8-4-99	Monitor Well Number: MW-9		
Depth: 50 FEET	Bore Size: 7.5 INCH	Casing Size: 2 INCH PVC	Casing Elevation: 2.85 AGS	Screen Size: .010	Top of Water Elevation: 33.23 FEET

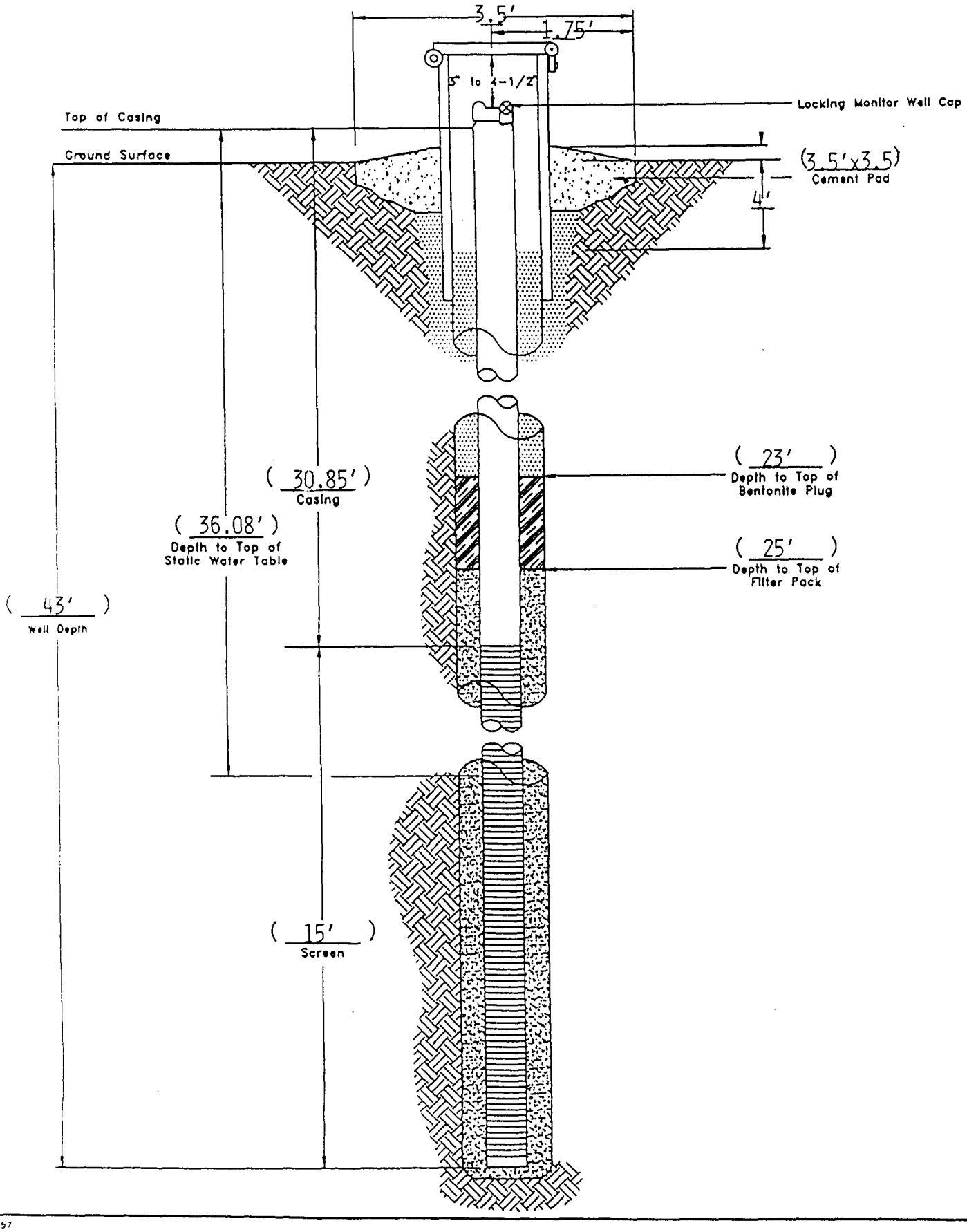

★ 8157

Company Drilled for:			
MARATHON OIL CO.			
Location: BERTHA BARBER			

RHINO ENVIRONMENTAL SERVICES, INC.
1 (800) 762-0241

Drilling Log

Well/Bore Number:	Date Drilled:	Driller:	Logged By:
MW-9	8-4-99	L.R.	D.M.

Drilling Method:	Depth of Boring:	Depth of Well:	Length of Casing:	Length of Screen:
HOLLOW STEM AUGER	50 FEET	43 FEET	31.80 FEET	15 FEET

Bore Diameter:	Casing Diameter:	Screen Diameter:	Slot Size:	Well Material:
7.5 INCH	2 INCH	2 INCH	.010	2" SCH 40 PVC

Depth	Description	Sample	Depth	Construction
0	YELLOW RED SAND TOP SOIL	CONTINUOUS CORE		CEMENT BACK TO SURFACE
5	PALE YELLOW SAND WITH CALICHE			
10				BACKFILL WITH CUTTINGS
15	WHITE TO PINK CALICHE SAND			
20	VERY HARD CALICHE AND SAND			CEMENT PLUG
25	PALE YELLOW SAND WITH CALICHE			BENTONITE PLUG
30	TOP OF STATIC WATER			12-20 FILTER PACK
35	RED YELLOW WATER SANDS WITH LIMESTONE STRINGERS			
40				
45				
50	TD AT 50 FEET			TD AT 50 FEET
55				
60				
65				
70				
75				
80				
85				
90				
95				
100				
105				

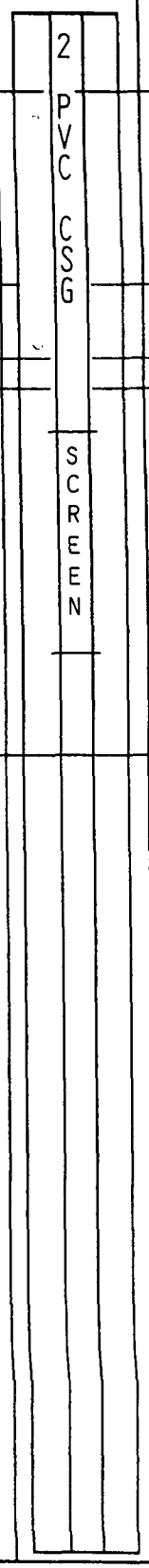

★ 8155

Company Drilled for:					
MARATHON OIL CO.	RHINO ENVIRONMENTAL SERVICES, INC. 1 (800) 762-0241				Monument Type Monitor Well Diagram
Location: BERTHA BARBER	Job Number: RH99-AH20	Installation Date: 8-5-99	Monitor Well Number: MW-10		
Depth: 40 FEET	Bore Size: 7.5 INCH	Casing Size: 2 INCH PVC	Casing Elevation: .45 AGS	Screen Size: .010	Top of Water Elevation: 34.39 FEET

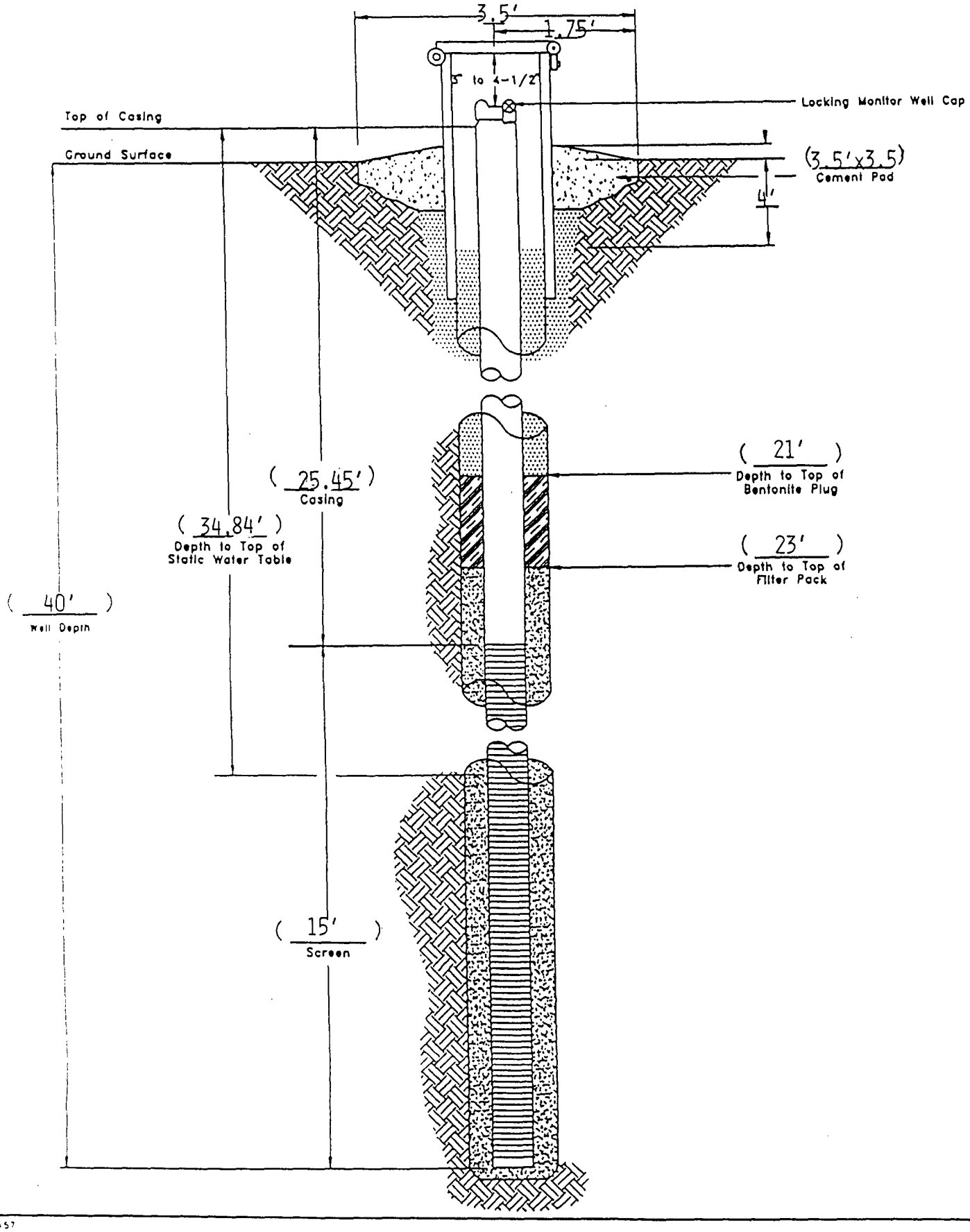

* 8157

Company Drilled for:				
MARATHON OIL CO.	RHINO ENVIRONMENTAL SERVICES, INC. 1 (800) 762-0241			**Drilling Log**
Location: BERTHA BARBER	Well/Bore Number: MW-10	Date Drilled: 8-5-99	Driller: L.R.	Logged By: D.M.
Drilling Method: HOLLOW STEM AUGER	Depth of Boring: 40 FEET	Depth of Well: 40 FEET	Length of Casing: 25.45 FEET	Length of Screen: 15 FEET
Bore Diameter: 7.5 INCH	Casing Diameter: 2 INCH	Screen Diameter: 2 INCH	Slot Size: .010	Well Material: 2" SCH 40 PVC

Depth	Description	Continuous Core	Sample Depth	Construction
0	RED YELLOW SAND TOP SOIL	CONTINUOUS CORE		CEMENT BACK TO SURFACE
5	WHITE-PINK CALICHE VERY SANDY			
10				BACKFILL WITH CUTTINGS
15	RED-YELLOW SAND WITH PINK CALICHE			
20			20'-1.5 22'-1.6 24'-12.1	CEMENT PLUG BENTONITE PLUG
25	VERY PALE BROWN SANDY CALICHE		26'-24 28'-150 30'-32 32'-28 34'-370	12-20 SAND FILTER PACK
30				
35	TOP OF STATIC WATER 34.39 FEET			
40	PINK WATER SAND WITH CALICHE			
	TD AT 40 FEET			TD AT 40 FEET
45				
50				
55				
60				
65				
70				
75				
80				
85				
90				
95				
100				
105				

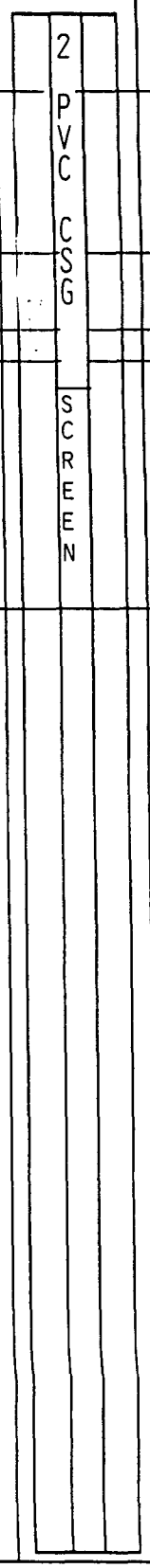

★ 8155

Company Drilled for:					
MARATHON OIL CO.					
Location: BERTHA BARBER					
Depth: 50 FEET	Bore Size: 7.5 INCH	Casing Size: 2 INCH PVC	Casing Elevation: 3.70 AGS	Screen Size: .010	Top of Water Elevation: 36.57 FEET

RHINO ENVIRONMENTAL SERVICES, INC.
1 (800) 762-0241

Monument Type Monitor Well Diagram

Job Number:	Installation Date:	Monitor Well Number:
RH99-AH20	8-5-99	MW-11

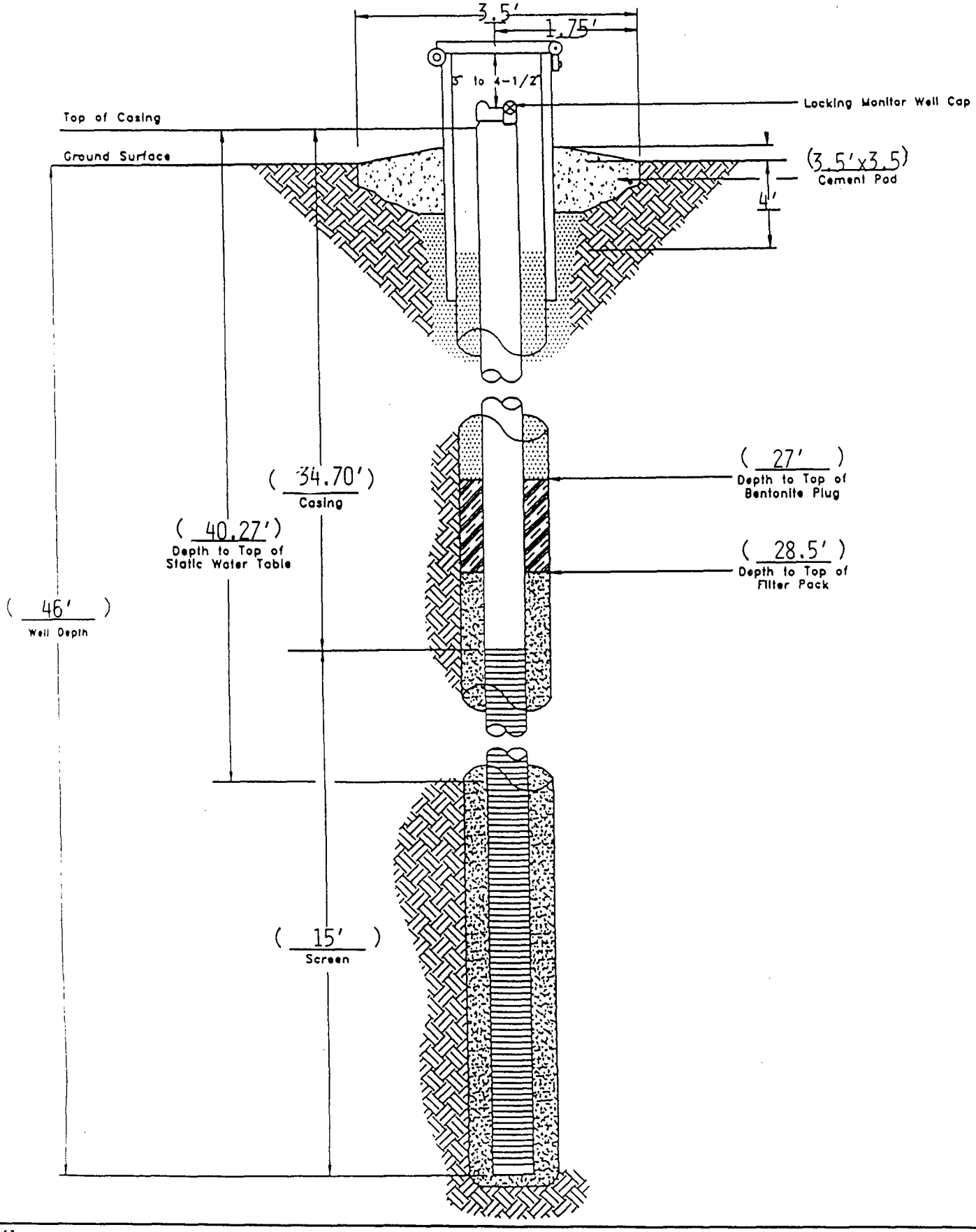

★ 8157

Company Drilled for:				
MARATHON OIL CO.		RHINO ENVIRONMENTAL SERVICES, INC. 1 (800) 762-0241		**Drilling Log**
Location: BERTHA BARBER		Well/Bore Number: MW-11	Date Drilled: 8-5-99	Driller: L.R. / Logged By: D.M.
Drilling Method: HOLLOW STEM AUGER	Depth of Boring: 50 FEET	Depth of Well: 46 FEET	Length of Casing: 34.70 FEET	Length of Screen: 15 FEET
Bore Diameter: 7.5 INCH	Casing Diameter: 2 INCH	Screen Diameter: 2 INCH	Slot Size: .010	Well Material: 2" SCH 40 PVC

Depth	Description	Core	Depth	Construction
0	RED-BROWN SAND TOP SOIL	CONTINUOUS CORE		CEMENT BACK TO SURFACE
5				
10	RED-YELLOW VERY FINE SAND			BACKFILL WITH CUTTINGS
15				
20	PINK SANDY CALICHE			
25				CEMENT PLUG
30	WHITE TO PINK SANDY CALICHE			~~BENTONITE PLUG~~
35	TOP OF STATIC WATER			12-20 SAND FILTER PACK
40	RED-PINK WATER SANDS AND CALICHE			
45				
50	TD AT 50 FEET			TD AT 50 FEET
55				
60				
65				
70				
75				
80				
85				
90				
95				
100				
105				

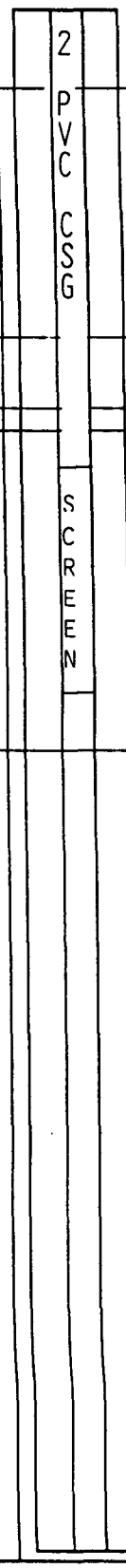

★ 8155

Company Drilled for:					
MARATHON OIL CO.	RHINO ENVIRONMENTAL SERVICES, INC. 1 (800) 762-0241				Monument Type Monitor Well Diagram
Location: BERTHA BARBER	Job Number: RH99-AH20	Installation Date: 8-6-99	Monitor Well Number: MW-12		
Depth: 50 FEET	Bore Size: 7.5 INCH	Casing Size: 2 INCH PVC	Casing Elevation: .70 AGS	Screen Size: .010	Top of Water Elevation: 35.89 FEET

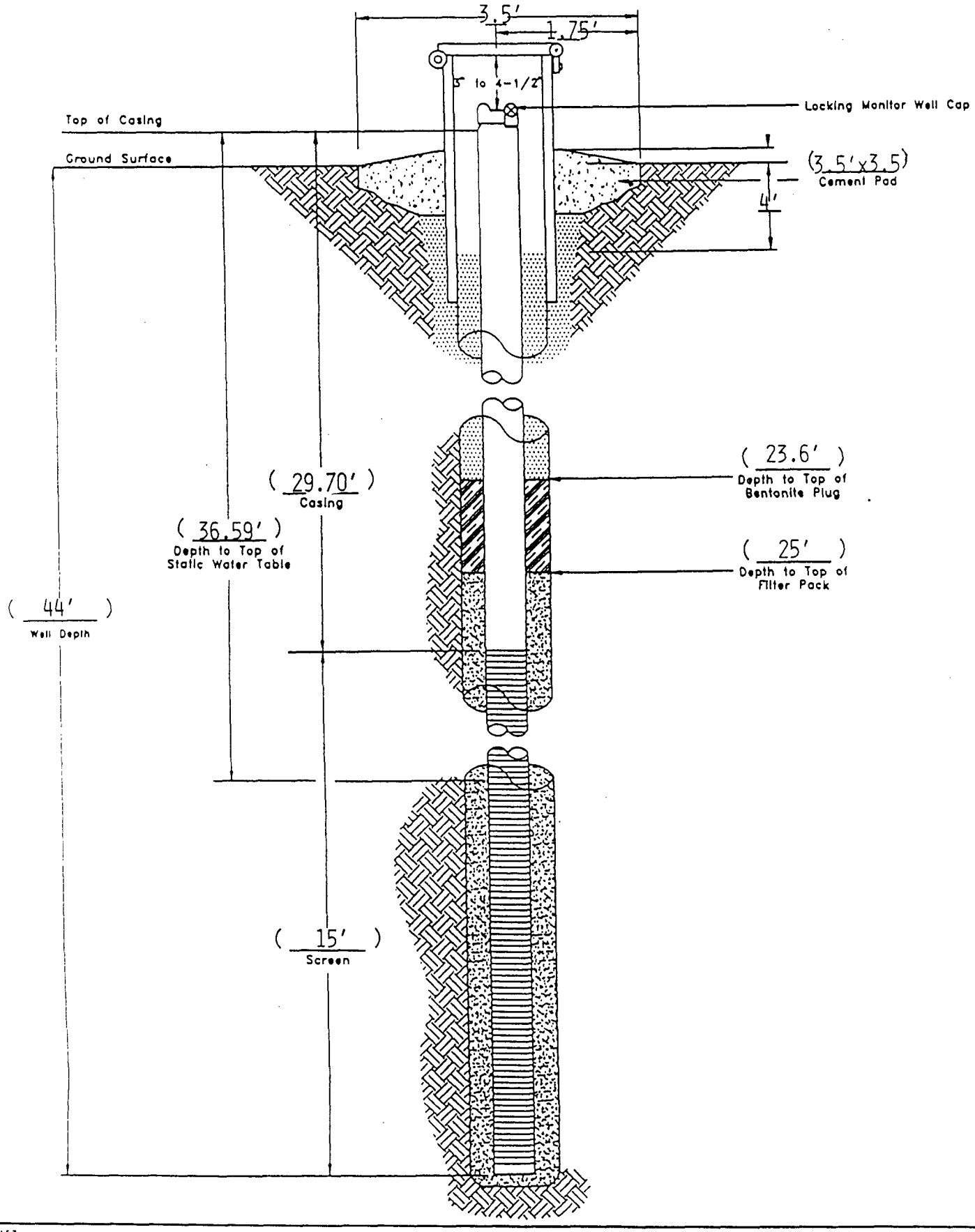

★ 8157

Company Drilled for:				
MARATHON OIL CO.	RHINO ENVIRONMENTAL SERVICES, INC. 1 (800) 762-0241			**Drilling Log**
Location: BERTHA BARBER	Well/Bore Number: PZ-2	Date Drilled: 8-6-99	Driller: L.R.	Logged By: D.M.
Drilling Method: HOLLOW STEM AUGER	Depth of Boring: 50 FEET	Depth of Well: 44 FEET	Length of Casing: 29.70 FEET	Length of Screen: 15 FEET
Bore Diameter: 7.5 INCH	Casing Diameter: 2 INCH	Screen Diameter: 2 INCH	Slot Size: .010	Well Material: 2" SCH 40 PVC

Depth	Description	Sample	Comments	Completion
0–5	RED TO YELLOW SAND VERY FINE TOP SOIL	CONTINUOUS CORE		CEMENT BACK TO SURFACE
5–10	WHITE TO PINK SANDY CALICHE			BACKFILL WITH CUTTINGS
10–20	WHITE TO LIGHT PINK SANDY CALICHE WITH SOME SANDSTONE			
20–25	HARD CALICHE LIGHT PINK			CEMENT PLUG
25	HARD DOLOMITE CALICHE			BENTONITE PLUG
30–35	RED WATER AND SAND			12-20 SAND FILTER PACK
35	TOP OF STATIC WATER			
50	TD AT 50 FEET			TD AT 50 FEET
60	DRILLED AS PZ-2			COMPLETED AS MW-12

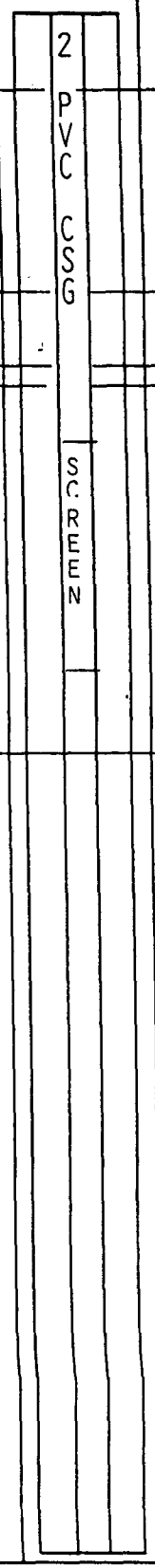

* 8155

Company Drilled for					
MARATHON OIL CO.					
Location: BERTHA BARBER					
Depth: 50 FEET	Bore Size: 7.5 INCH	Casing Size: 2 INCH PVC	Casing Elevation: .60 AGS	Screen Size: .010	Top of Water Elevation: 33.32 FEET

RHINO ENVIRONMENTAL SERVICES, INC.
1 (800) 762-0241

Monument Type Monitor Well Diagram

Job Number:	Installation Date:	Monitor Well Number:
RH99-AH20	8-5-99	MW-13

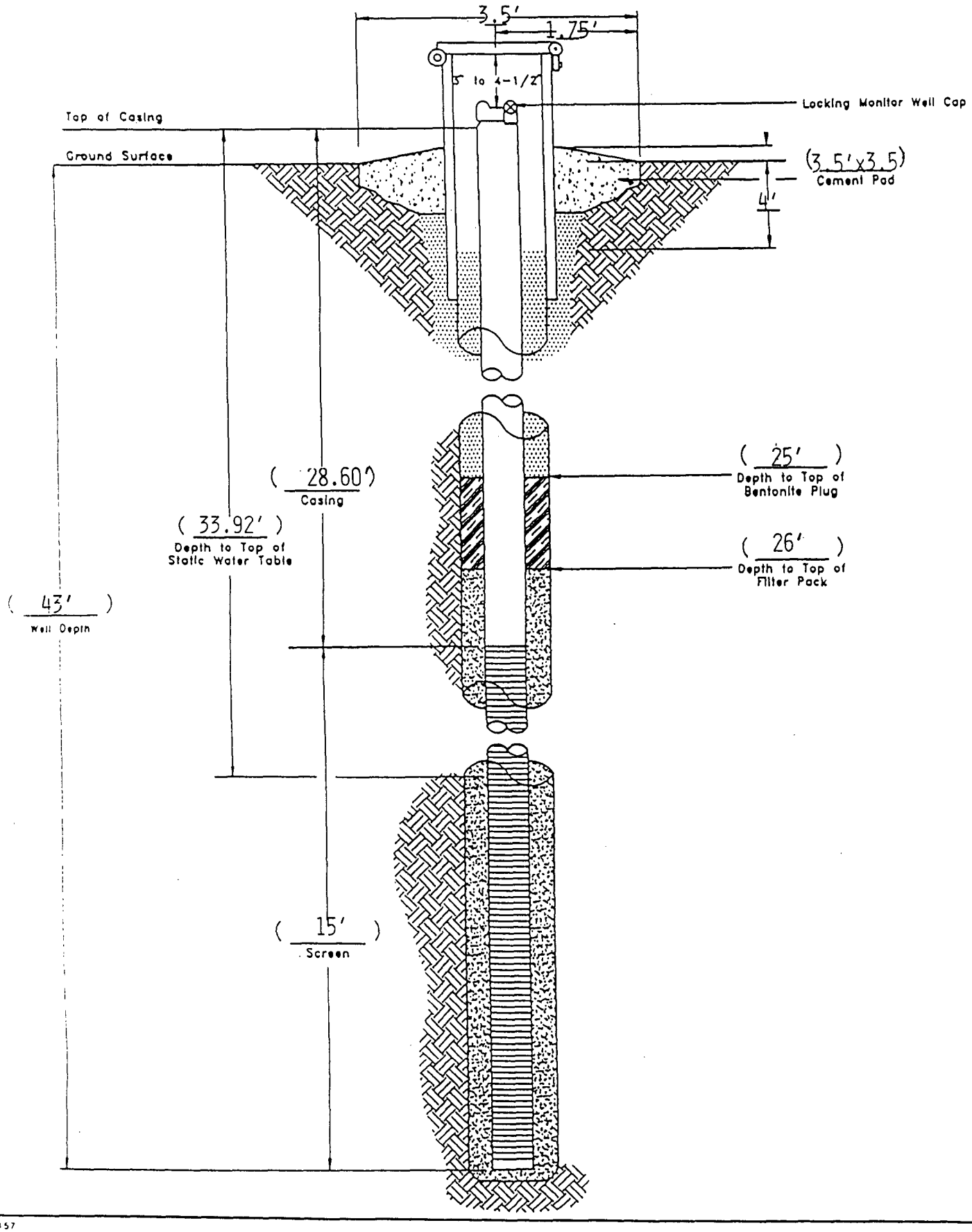

★ 8157

Company Drilled for:				
MARATHON OIL CO.	RHINO ENVIRONMENTAL SERVICES, INC. 1 (800) 762-0241			**Drilling Log**
Location: BERTHA BARBER	Well/Bore Number: TPZ-1	Date Drilled: 8-5-99	Driller: L.R.	Logged By: D.M.
Drilling Method: HOLLOW STEM AUGER	Depth of Boring: 50 FEET	Depth of Well: 43 FEET	Length of Casing: 28.60 FEET	Length of Screen: 15 FEET
Bore Diameter: 7.5 INCH	Casing Diameter: 2 INCH	Screen Diameter: 2 INCH	Slot Size: .010	Well Material: 2" SCH 40 PVC

Depth	Description	Sample	Blows	Construction
0	RED-YELLOW SANDY TOP SOIL	CONTINUOUS CORE		CEMENT BACK TO SURFACE
5	PINK SANDY CALICHE-SILTY			
	PINK SANDY CALICHE			BACKFILL WITH CUTTINGS
10				
15				
	HARD CALICHE SANDY			
20	HARD PINK TO WHITE CALICHE			
25				CEMENT PLUG
				BENTONITE PLUG
30	PINK TO WHITE CALICHE			12-20 SAND FILTER PACK
	TOP OF STATIC WATER			
35	RED WATER SAND WITH SANDSTONE STRINGERS			
40				
45				
50	TD AT 50 FEET			TD AT 50 FEET
55				
60	DRILLED AS TPZ-1			COMPLETED AS MW-13
65				
70				
75				
80				
85				
90				
95				
100				
105				

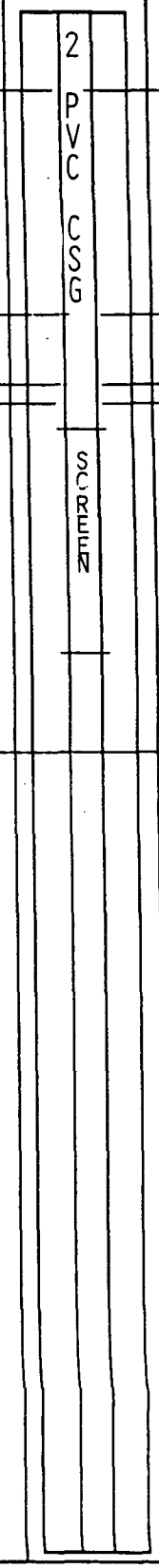

★ 8155

Company Drilled for: MARATHON OIL CO.

Location: BERTHA BARBER

RHINO ENVIRONMENTAL SERVICES, INC.
1 (800) 762-0241

Drilling Log

Well/Bore Number:	Date Drilled:	Driller:	Logged By:
PZ-3	8-6-99	L.R.	D.M.

Drilling Method:	Depth of Boring:	Depth of Well:	Length of Casing:	Length of Screen:
HOLLOW STEM AUGER	50 FEET	N/A	N/A	N/A

Bore Diameter:	Casing Diameter:	Screen Diameter:	Slot Size:	Well Material:
7.5 INCH	N/A	N/A	N/A	N/A

Depth	Description	Sample	Remarks
0–5	RED YELLOW SAND TOP SOIL	CONTINUOUS CORE	WELL WAS DRILLED AS PZ-3 TEMPORARY CASING AND SCREEN WAS PULLED AND WELL WAS PLUGGED WITH CEMENT FROM TD BACK TO SURFACE
5–10	PINK SANDY CALICHE		
10–25	PALE BROWN SAND AND CALICHE SANDY CALICHE WHITE TO PINK		
25–35	SANDY CALICHE		
35–50	TOP OF STATIC WATER TD AT 50 FEET		

★ 8155

Company Drilled for: MARATHON OIL CO.

Location: BERTHA BARBER

RHINO ENVIRONMENTAL SERVICES, INC.
1 (800) 762-0241

Drilling Log

Well/Bore Number:	Date Drilled:	Driller:	Logged By:
PZ-4	8-6-99	L.R.	D.M.

Drilling Method:	Depth of Boring:	Depth of Well:	Length of Casing:	Length of Screen:
HOLLOW STEM AUGER	50 FEET	N/A	N/A	N/A

Bore Diameter:	Casing Diameter:	Screen Diameter:	Slot Size:	Well Material:
7.5 INCH	N/A	N/A	N/A	N/A

Depth	Description	Sample Type	Blows (PSI)	Remarks	Well Diagram
0–5	RED-YELLOW SAND TOP SOIL	CONTINUOUS CORE		WELL WAS DRILLED AS PZ-4 TEMPORARY CASING AND SCREEN WAS PULLED AND WELL WAS PLUGGED WITH CEMENT FROM TD BACK TO SURFACE	
5–15	LIGHT PINK VERY SANDY CALICHE				
15–20	LIGHT BROWN SAND				
20–40	VERY SANDY WITH SANDSTONE STRINGERS AND CALICHE				
40	TOP OF STATIC WATER				
45–50	VERY HARD CALICHE SANDSTONE				

0, 5, 10, 15, 20, 25, 30, 35, 40, 45, 50, 55, 60, 65, 70, 75, 80, 85, 90, 95, 100, 105

★ 8155

Appendix E

Quarterly Groundwater Sampling
Laboratory Analytical Reports

April 1999 Monitoring Event

CORE LABORATORIES

ANALYTICAL REPORT

JOB NUMBER: 903675

Prepared For:

Marathon Oil Company
125 West Missouri Street
P.O. Box 552
Midland, TX 79702-0552

Attention: Mr. Paul Peacock

Date: 04/23/99

Les Arnold
Signature

4-23-99
Date

Name: Les Arnold

Title: Laboratory Manager

2400 Cumberland Drive
Valparaiso, IN 46383

PHONE: 219-464-2389
FAX..: 219-462-2953

MCR

APR 29 1999

Environmental & Safe

CORE LABORATORIES

SAMPLE INFORMATION
Date: 04/23/99

Job Number.: 903675
Customer...: Marathon Oil Company
Attn.....: Mr. Paul Peacock

Project Number.....: 96000651
Customer Project ID....: BERTHA BARBER TANK
Project Description....: Marathon Oil Co., Midland, Tx

Laboratory Sample ID	Customer Sample ID	Sample Matrix	Date Sampled	Time Sampled	Date Received	Time Received
903675-1	MW-1	Water	04/09/1999	11:45	04/10/1999	13:42
903675-2	MW-2	Water	04/09/1999	13:00	04/10/1999	13:42
903675-3	MW-3	Water	04/09/1999	15:10	04/10/1999	13:42
903675-4	MW-4	Water	04/09/1999	15:40	04/10/1999	13:42
903675-5	MW-5	Water	04/09/1999	14:00	04/10/1999	13:42

CORE LABORATORIES

LABORATORY TEST RESULTS

Job Number: 903675

Date: 04/23/99

CUSTOMER: Marathon Oil Company PROJECT: BERTHA BARBER TANK ATTN: Mr. Paul Peacock

Customer Sample ID: MW-1
Date Sampled.....: 04/09/1999
Time Sampled.....: 11:45
Sample Matrix.....: Water

Laboratory Sample ID: 903675-1
Date Received.....: 04/10/1999
Time Received.....: 13:42

TEST METHOD	PARAMETER/TEST DESCRIPTION	SAMPLE RESULT	REPORTING LIMIT	UNITS	DATE	TECH
EPA 150.1	pH	6.88	0.01	pH Units	04/10/99	jaw
EPA 160.1	Solids, Total Dissolved (TDS)	6100	10	mg/L	04/16/99	clg
EPA 325.2	Chloride	3600	100	mg/L	04/15/99	dmw
EPA 7470	Mercury (Hg)	<0.001	0.001	mg/L	04/15/99	pal
EPA 3510	Separatory Funnel Liq/Liq Extraction	Complete			04/13/99	bjl
EPA 6010B	Metals Analysis (ICAP)					
	Aluminum (Al)	4.20	0.05	mg/L	04/15/99	amw
	Antimony (Sb)	<0.1	0.1	mg/L	04/19/99	chh
	Arsenic (As)	<0.02	0.02	mg/L	04/15/99	amw
	Barium (Ba)	2.74	0.01	mg/L	04/14/99	pal
	Beryllium (Be)	<0.005	0.005	mg/L	04/14/99	pal
	Boron (B)	0.53	0.05	mg/L	04/19/99	pal
	Cadmium (Cd)	<0.005	0.005	mg/L	04/14/99	pal
	Calcium (Ca)	828	5	mg/L	04/22/99	pal
	Chromium (Cr)	0.01	0.01	mg/L	04/14/99	pal
	Cobalt (Co)	<0.03	0.03	mg/L	04/14/99	pal
	Copper (Cu)	<0.01	0.01	mg/L	04/14/99	pal
	Iron (Fe)	3.86	0.05	mg/L	04/14/99	pal
	Lead (Pb)	<0.05	0.05	mg/L	04/14/99	pal
	Magnesium (Mg)	216	0.1	mg/L	04/14/99	pal
	Manganese (Mn)	0.48	0.01	mg/L	04/14/99	pal
	Molybdenum (Mo)	<0.05	0.05	mg/L	04/19/99	chh
	Nickel (Ni)	0.02	0.01	mg/L	04/14/99	pal
	Potassium (K)	29.9	0.5	mg/L	04/14/99	pal
	Selenium (Se)	<0.02	0.02	mg/L	04/22/99	pal
	Sodium (Na)	772	2	mg/L	04/19/99	chh
	Silver (Ag)	<0.01	0.01	mg/L	04/14/99	pal
	Thallium (Tl)	<0.02	0.02	mg/L	04/15/99	amw
	Vanadium (V)	0.06	0.05	mg/L	04/15/99	amw
	Zinc (Zn)	0.02	0.01	mg/L	04/14/99	pal
EPA 8310	Polynuclear Aromatic Hydrocarbons-HPLC					
	Acenaphthene	ND	75	ug/L	04/15/99	rm
	Acenaphthylene	ND	75	ug/L	04/15/99	rm
	Anthracene	ND	15	ug/L	04/15/99	rm
	Benzo(b)fluoranthene	1.6	1.5	ug/L	04/15/99	rm
	Benzo(k)fluoranthene	ND	1.5	ug/L	04/15/99	rm
	Benzo(a)anthracene	6.5	1.5	ug/L	04/15/99	rm
	Benzo(a)pyrene	ND	1.5	ug/L	04/15/99	rm
	Benzo(ghi)perylene	ND	1.5	ug/L	04/15/99	rm
	Chrysene	<15	15	ug/L	04/15/99	rm
	Dibenzo(a,h)anthracene	ND	1.5	ug/L	04/15/99	rm
	Fluoranthene	41	15	ug/L	04/15/99	rm

CORE LABORATORIES

LABORATORY TEST RESULTS

Job Number: 903675

Date: 04/23/99

CUSTOMER: Marathon Oil Company PROJECT: BERTHA BARBER TANK ATTN: Mr. Paul Peacock

Customer Sample ID: MW-1
Date Sampled.....: 04/09/1999
Time Sampled.....: 11:45
Sample Matrix.....: Water

Laboratory Sample ID: 903675-1
Date Received.....: 04/10/1999
Time Received.....: 13:42

TEST METHOD	PARAMETER/TEST DESCRIPTION	SAMPLE RESULT	REPORTING LIMIT	UNITS	DATE	TECH
	Fluorene	<15	15	ug/L	04/15/99	rm
	Indeno(1,2,3-cd)pyrene	ND	1.5	ug/L	04/15/99	rm
	Naphthalene	ND	75	ug/L	04/15/99	rm
	Phenanthrene	<15	15	ug/L	04/15/99	rm
	Pyrene	<15	15	ug/L	04/15/99	rm
EPA 8260B	Volatile Organic Compounds					
	Benzene	5	5	ug/L	04/16/99	weh
	Ethylbenzene	ND	5	ug/L	04/16/99	weh
	Toluene	ND	5	ug/L	04/16/99	weh
	Xylenes (total)	ND	10	ug/L	04/16/99	weh

CORE LABORATORIES

LABORATORY TEST RESULTS

Job Number: 903675

Date: 04/23/99

CUSTOMER: Marathon Oil Company PROJECT: BERTHA BARBER TANK ATTN: Mr. Paul Peacock

Customer Sample ID: MW-2
Date Sampled.....: 04/09/1999
Time Sampled.....: 13:00
Sample Matrix.....: Water

Laboratory Sample ID: 903675-2
Date Received.....: 04/10/1999
Time Received.....: 13:42

TEST METHOD	PARAMETER/TEST DESCRIPTION	SAMPLE RESULT	REPORTING LIMIT	UNITS	DATE	TECH
EPA 150.1	pH	7.00	0.01	pH Units	04/10/99	jaw
EPA 160.1	Solids, Total Dissolved (TDS)	4400	10	mg/L	04/16/99	clg
EPA 325.2	Chloride	2700	100	mg/L	04/15/99	dmw
EPA 7470	Mercury (Hg)	<0.001	0.001	mg/L	04/15/99	pal
EPA 3510	Separatory Funnel Liq/Liq Extraction	Complete			04/13/99	bjl
EPA 6010B	Metals Analysis (ICAP)					
	Aluminum (Al)	1.41	0.05	mg/L	04/22/99	chh
	Antimony (Sb)	<0.1	0.1	mg/L	04/19/99	chh
	Arsenic (As)	0.03	0.02	mg/L	04/15/99	amw
	Barium (Ba)	0.39	0.01	mg/L	04/14/99	pal
	Beryllium (Be)	<0.005	0.005	mg/L	04/14/99	pal
	Boron (B)	0.74	0.05	mg/L	04/19/99	pal
	Cadmium (Cd)	<0.005	0.005	mg/L	04/14/99	pal
	Calcium (Ca)	441	0.5	mg/L	04/14/99	pal
	Chromium (Cr)	<0.01	0.01	mg/L	04/14/99	pal
	Cobalt (Co)	<0.03	0.03	mg/L	04/14/99	pal
	Copper (Cu)	<0.01	0.01	mg/L	04/14/99	pal
	Iron (Fe)	1.54	0.05	mg/L	04/14/99	pal
	Lead (Pb)	<0.05	0.05	mg/L	04/14/99	pal
	Magnesium (Mg)	158	0.1	mg/L	04/14/99	pal
	Manganese (Mn)	0.26	0.01	mg/L	04/14/99	pal
	Molybdenum (Mo)	<0.05	0.05	mg/L	04/19/99	chh
	Nickel (Ni)	0.01	0.01	mg/L	04/14/99	pal
	Potassium (K)	48.7	0.5	mg/L	04/14/99	pal
	Selenium (Se)	<0.02	0.02	mg/L	04/15/99	amw
	Sodium (Na)	738	2	mg/L	04/19/99	chh
	Silver (Ag)	<0.01	0.01	mg/L	04/14/99	pal
	Thallium (Tl)	<0.02	0.02	mg/L	04/15/99	amw
	Vanadium (V)	<0.05	0.05	mg/L	04/15/99	amw
	Zinc (Zn)	0.09	0.01	mg/L	04/14/99	pal
EPA 8310	Polynuclear Aromatic Hydrocarbons-HPLC					
	Acenaphthene	ND	5.0	ug/L	04/15/99	rm
	Acenaphthylene	ND	5.0	ug/L	04/15/99	rm
	Anthracene	ND	1.0	ug/L	04/15/99	rm
	Benzo(b)fluoranthene	ND	0.10	ug/L	04/15/99	rm
	Benzo(k)fluoranthene	ND	0.10	ug/L	04/15/99	rm
	Benzo(a)anthracene	<0.10	0.10	ug/L	04/15/99	rm
	Benzo(a)pyrene	ND	0.10	ug/L	04/15/99	rm
	Benzo(ghi)perylene	ND	0.10	ug/L	04/15/99	rm
	Chrysene	<1.0	1.0	ug/L	04/15/99	rm
	Dibenzo(a,h)anthracene	ND	0.10	ug/L	04/15/99	rm
	Fluoranthene	<1.0	1.0	ug/L	04/15/99	rm

CORE LABORATORIES

LABORATORY TEST RESULTS

Job Number: 903675

Date: 04/23/99

CUSTOMER: Marathon Oil Company PROJECT: BERTHA BARBER TANK ATTN: Mr. Paul Peacock

Customer Sample ID: MW-2
Date Sampled.....: 04/09/1999
Time Sampled.....: 13:00
Sample Matrix.....: Water

Laboratory Sample ID: 903675-2
Date Received.....: 04/10/1999
Time Received.....: 13:42

TEST METHOD	PARAMETER/TEST DESCRIPTION	SAMPLE RESULT	REPORTING LIMIT	UNITS	DATE	TECH
	Fluorene	<1.0	1.0	ug/L	04/15/99	rm
	Indeno(1,2,3-cd)pyrene	ND	0.10	ug/L	04/15/99	rm
	Naphthalene	ND	5.0	ug/L	04/15/99	rm
	Phenanthrene	<1.0	1.0	ug/L	04/15/99	rm
	Pyrene	<1.0	1.0	ug/L	04/15/99	rm
EPA 8260B	Volatile Organic Compounds					
	Benzene	ND	5	ug/L	04/13/99	weh
	Ethylbenzene	<5	5	ug/L	04/13/99	weh
	Toluene	ND	5	ug/L	04/13/99	weh
	Xylenes (total)	ND	10	ug/L	04/13/99	weh

CORE LABORATORIES

LABORATORY TEST RESULTS

Job Number: 903675 Date: 04/23/99

CUSTOMER: Marathon Oil Company PROJECT: BERTHA BARBER TANK ATTN: Mr. Paul Peacock

Customer Sample ID: MW-3
Date Sampled.....: 04/09/1999
Time Sampled.....: 15:10
Sample Matrix.....: Water

Laboratory Sample ID: 903675-3
Date Received.....: 04/10/1999
Time Received.....: 13:42

TEST METHOD	PARAMETER/TEST DESCRIPTION	SAMPLE RESULT	REPORTING LIMIT	UNITS	DATE	TECH
EPA 150.1	pH	6.78	0.01	pH Units	04/10/99	jaw
EPA 160.1	Solids, Total Dissolved (TDS)	3500	10	mg/L	04/16/99	clg
EPA 325.2	Chloride	2000	100	mg/L	04/15/99	dmw
EPA 7470	Mercury (Hg)	<0.001	0.001	mg/L	04/15/99	pal
EPA 3510	Separatory Funnel Liq/Liq Extraction	Complete			04/13/99	bjl
EPA 6010B	Metals Analysis (ICAP)					
	Aluminum (Al)	4.98	0.05	mg/L	04/15/99	amw
	Antimony (Sb)	<0.1	0.1	mg/L	04/19/99	chh
	Arsenic (As)	<0.02	0.02	mg/L	04/15/99	amw
	Barium (Ba)	0.69	0.01	mg/L	04/14/99	pal
	Beryllium (Be)	<0.005	0.005	mg/L	04/14/99	pal
	Boron (B)	0.44	0.05	mg/L	04/19/99	pal
	Cadmium (Cd)	<0.005	0.005	mg/L	04/14/99	pal
	Calcium (Ca)	677	0.5	mg/L	04/20/99	pal
	Chromium (Cr)	0.01	0.01	mg/L	04/14/99	pal
	Cobalt (Co)	<0.03	0.03	mg/L	04/14/99	pal
	Copper (Cu)	<0.01	0.01	mg/L	04/14/99	pal
	Iron (Fe)	4.66	0.05	mg/L	04/14/99	pal
	Lead (Pb)	<0.05	0.05	mg/L	04/14/99	pal
	Magnesium (Mg)	148	0.1	mg/L	04/14/99	pal
	Manganese (Mn)	0.37	0.01	mg/L	04/14/99	pal
	Molybdenum (Mo)	<0.05	0.05	mg/L	04/19/99	chh
	Nickel (Ni)	<0.01	0.01	mg/L	04/14/99	pal
	Potassium (K)	12.5	0.5	mg/L	04/14/99	pal
	Selenium (Se)	<0.02	0.02	mg/L	04/22/99	pal
	Sodium (Na)	395	2	mg/L	04/19/99	chh
	Silver (Ag)	0.03	0.01	mg/L	04/14/99	pal
	Thallium (Tl)	0.02	0.02	mg/L	04/15/99	amw
	Vanadium (V)	<0.05	0.05	mg/L	04/15/99	amw
	Zinc (Zn)	0.02	0.01	mg/L	04/14/99	pal
EPA 8310	Polynuclear Aromatic Hydrocarbons-HPLC					
	Acenaphthene	ND	5.0	ug/L	04/15/99	rm
	Acenaphthylene	ND	5.0	ug/L	04/15/99	rm
	Anthracene	ND	1.0	ug/L	04/15/99	rm
	Benzo(b)fluoranthene	ND	0.10	ug/L	04/15/99	rm
	Benzo(k)fluoranthene	ND	0.10	ug/L	04/15/99	rm
	Benzo(a)anthracene	ND	0.10	ug/L	04/15/99	rm
	Benzo(a)pyrene	ND	0.10	ug/L	04/15/99	rm
	Benzo(ghi)perylene	ND	0.10	ug/L	04/15/99	rm
	Chrysene	ND	1.0	ug/L	04/15/99	rm
	Dibenzo(a,h)anthracene	ND	0.10	ug/L	04/15/99	rm
	Fluoranthene	ND	1.0	ug/L	04/15/99	rm

CORE LABORATORIES

LABORATORY TEST RESULTS

Job Number: 903675 Date: 04/23/99

CUSTOMER: Marathon Oil Company PROJECT: BERTHA BARBER TANK ATTN: Mr. Paul Peacock

Customer Sample ID: MW-3
Date Sampled.....: 04/09/1999
Time Sampled.....: 15:10
Sample Matrix.....: Water

Laboratory Sample ID: 903675-3
Date Received.....: 04/10/1999
Time Received.....: 13:42

TEST METHOD	PARAMETER/TEST DESCRIPTION	SAMPLE RESULT	REPORTING LIMIT	UNITS	DATE	TECH
	Fluorene	<1.0	1.0	ug/L	04/15/99	rm
	Indeno(1,2,3-cd)pyrene	ND	0.10	ug/L	04/15/99	rm
	Naphthalene	<5.0	5.0	ug/L	04/15/99	rm
	Phenanthrene	<1.0	1.0	ug/L	04/15/99	rm
	Pyrene	<1.0	1.0	ug/L	04/15/99	rm
EPA 8260B	Volatile Organic Compounds					
	Benzene	100	5	ug/L	04/13/99	weh
	Ethylbenzene	14	5	ug/L	04/13/99	weh
	Toluene	<5	5	ug/L	04/13/99	weh
	Xylenes (total)	<10	10	ug/L	04/13/99	weh

CORE LABORATORIES

LABORATORY TEST RESULTS

Job Number: 903675

Date: 04/23/99

CUSTOMER: Marathon Oil Company PROJECT: BERTHA BARBER TANK ATTN: Mr. Paul Peacock

Customer Sample ID: MW-4
Date Sampled.....: 04/09/1999
Time Sampled.....: 15:40
Sample Matrix.....: Water

Laboratory Sample ID: 903675-4
Date Received.....: 04/10/1999
Time Received.....: 13:42

TEST METHOD	PARAMETER/TEST DESCRIPTION	SAMPLE RESULT	REPORTING LIMIT	UNITS	DATE	TECH
EPA 150.1	pH	6.95	0.01	pH Units	04/10/99	jaw
EPA 160.1	Solids, Total Dissolved (TDS)	1900	10	mg/L	04/16/99	clg
EPA 325.2	Chloride	800	100	mg/L	04/15/99	dmw
EPA 7470	Mercury (Hg)	<0.001	0.001	mg/L	04/15/99	pal
EPA 3510	Separatory Funnel Liq/Liq Extraction	Complete			04/13/99	bjl
EPA 6010B	Metals Analysis (ICAP)					
	Aluminum (Al)	2.57	0.05	mg/L	04/22/99	chh
	Antimony (Sb)	<0.1	0.1	mg/L	04/19/99	chh
	Arsenic (As)	<0.02	0.02	mg/L	04/15/99	amw
	Barium (Ba)	1.63	0.01	mg/L	04/14/99	pal
	Beryllium (Be)	<0.005	0.005	mg/L	04/14/99	pal
	Boron (B)	0.44	0.05	mg/L	04/19/99	pal
	Cadmium (Cd)	<0.005	0.005	mg/L	04/14/99	pal
	Calcium (Ca)	340	0.5	mg/L	04/14/99	pal
	Chromium (Cr)	0.01	0.01	mg/L	04/14/99	pal
	Cobalt (Co)	<0.03	0.03	mg/L	04/14/99	pal
	Copper (Cu)	<0.01	0.01	mg/L	04/14/99	pal
	Iron (Fe)	1.46	0.05	mg/L	04/14/99	pal
	Lead (Pb)	<0.05	0.05	mg/L	04/14/99	pal
	Magnesium (Mg)	77.2	0.1	mg/L	04/14/99	pal
	Manganese (Mn)	0.32	0.01	mg/L	04/14/99	pal
	Molybdenum (Mo)	<0.05	0.05	mg/L	04/19/99	chh
	Nickel (Ni)	<0.01	0.01	mg/L	04/14/99	pal
	Potassium (K)	9.6	0.5	mg/L	04/14/99	pal
	Selenium (Se)	<0.02	0.02	mg/L	04/22/99	pal
	Sodium (Na)	272	2	mg/L	04/19/99	chh
	Silver (Ag)	<0.01	0.01	mg/L	04/14/99	pal
	Thallium (Tl)	0.03	0.02	mg/L	04/15/99	amw
	Vanadium (V)	<0.05	0.05	mg/L	04/15/99	amw
	Zinc (Zn)	0.02	0.01	mg/L	04/14/99	pal
EPA 8310	Polynuclear Aromatic Hydrocarbons-HPLC					
	Acenaphthene	ND	5.0	ug/L	04/15/99	rm
	Acenaphthylene	ND	5.0	ug/L	04/15/99	rm
	Anthracene	<1.0	1.0	ug/L	04/15/99	rm
	Benzo(b)fluoranthene	ND	0.10	ug/L	04/15/99	rm
	Benzo(k)fluoranthene	ND	0.10	ug/L	04/15/99	rm
	Benzo(a)anthracene	0.12	0.10	ug/L	04/15/99	rm
	Benzo(a)pyrene	ND	0.10	ug/L	04/15/99	rm
	Benzo(ghi)perylene	ND	0.10	ug/L	04/15/99	rm
	Chrysene	<1.0	1.0	ug/L	04/15/99	rm
	Dibenzo(a,h)anthracene	ND	0.10	ug/L	04/15/99	rm
	Fluoranthene	1.4	1.0	ug/L	04/15/99	rm

CORE LABORATORIES

LABORATORY TEST RESULTS

Job Number: 903675

Date: 04/23/99

CUSTOMER: Marathon Oil Company PROJECT: BERTHA BARBER TANK ATTN: Mr. Paul Peacock

Customer Sample ID: MW-4
Date Sampled.....: 04/09/1999
Time Sampled.....: 15:40
Sample Matrix.....: Water

Laboratory Sample ID: 903675-4
Date Received.....: 04/10/1999
Time Received.....: 13:42

TEST METHOD	PARAMETER/TEST DESCRIPTION	SAMPLE RESULT	REPORTING LIMIT	UNITS	DATE	TECH
	Fluorene	1.2	1.0	ug/L	04/15/99	rm
	Indeno(1,2,3-cd)pyrene	ND	0.10	ug/L	04/15/99	rm
	Naphthalene	18.1	5.0	ug/L	04/15/99	rm
	Phenanthrene	1.0	1.0	ug/L	04/15/99	rm
	Pyrene	<1.0	1.0	ug/L	04/15/99	rm
EPA 8260B	Volatile Organic Compounds					
	Benzene	120	5	ug/L	04/15/99	weh
	Ethylbenzene	77	5	ug/L	04/15/99	weh
	Toluene	43	5	ug/L	04/15/99	weh
	Xylenes (total)	60	10	ug/L	04/15/99	weh

CORE LABORATORIES

LABORATORY TEST RESULTS

Job Number: 903675 Date: 04/23/99

CUSTOMER: Marathon Oil Company PROJECT: BERTHA BARBER TANK ATTN: Mr. Paul Peacock

Customer Sample ID: MW-5
Date Sampled.....: 04/09/1999
Time Sampled.....: 14:00
Sample Matrix.....: Water

Laboratory Sample ID: 903675-5
Date Received.....: 04/10/1999
Time Received.....: 13:42

TEST METHOD	PARAMETER/TEST DESCRIPTION	SAMPLE RESULT	REPORTING LIMIT	UNITS	DATE	TECH
EPA 150.1	pH	6.79	0.01	pH Units	04/10/99	jaw
EPA 160.1	Solids, Total Dissolved (TDS)	4000	10	mg/L	04/16/99	clg
EPA 325.2	Chloride	2400	100	mg/L	04/15/99	dmw
EPA 7470	Mercury (Hg)	<0.001	0.001	mg/L	04/15/99	pal
EPA 3510	Separatory Funnel Liq/Liq Extraction	Complete			04/13/99	bjl
EPA 6010B	Metals Analysis (ICAP)					
	Aluminum (Al)	61.3	0.05	mg/L	04/15/99	amw
	Antimony (Sb)	<0.1	0.1	mg/L	04/19/99	chh
	Arsenic (As)	0.05	0.02	mg/L	04/15/99	amw
	Barium (Ba)	15.3	0.01	mg/L	04/14/99	pal
	Beryllium (Be)	<0.005	0.005	mg/L	04/14/99	pal
	Boron (B)	0.55	0.05	mg/L	04/19/99	pal
	Cadmium (Cd)	<0.005	0.005	mg/L	04/14/99	pal
	Calcium (Ca)	<0.5	0.5	mg/L	04/14/99	pal
	Chromium (Cr)	0.09	0.01	mg/L	04/14/99	pal
	Cobalt (Co)	<0.03	0.03	mg/L	04/14/99	pal
	Copper (Cu)	0.06	0.01	mg/L	04/14/99	pal
	Iron (Fe)	47.2	0.05	mg/L	04/14/99	pal
	Lead (Pb)	<0.05	0.05	mg/L	04/14/99	pal
	Magnesium (Mg)	234	0.1	mg/L	04/14/99	pal
	Manganese (Mn)	0.97	0.01	mg/L	04/14/99	pal
	Molybdenum (Mo)	<0.05	0.05	mg/L	04/19/99	chh
	Nickel (Ni)	0.05	0.01	mg/L	04/14/99	pal
	Potassium (K)	23.7	0.5	mg/L	04/14/99	pal
	Selenium (Se)	<0.02	0.02	mg/L	04/15/99	amw
	Sodium (Na)	455	2	mg/L	04/19/99	chh
	Silver (Ag)	0.10	0.01	mg/L	04/14/99	pal
	Thallium (Tl)	0.03	0.02	mg/L	04/15/99	amw
	Vanadium (V)	0.31	0.05	mg/L	04/15/99	amw
	Zinc (Zn)	0.12	0.01	mg/L	04/14/99	pal
EPA 8310	Polynuclear Aromatic Hydrocarbons-HPLC					
	Acenaphthene	ND	5.0	ug/L	04/15/99	rm
	Acenaphthylene	ND	5.0	ug/L	04/15/99	rm
	Anthracene	ND	1.0	ug/L	04/15/99	rm
	Benzo(b)fluoranthene	ND	0.10	ug/L	04/15/99	rm
	Benzo(k)fluoranthene	ND	0.10	ug/L	04/15/99	rm
	Benzo(a)anthracene	ND	0.10	ug/L	04/15/99	rm
	Benzo(a)pyrene	ND	0.10	ug/L	04/15/99	rm
	Benzo(ghi)perylene	ND	0.10	ug/L	04/15/99	rm
	Chrysene	ND	1.0	ug/L	04/15/99	rm
	Dibenzo(a,h)anthracene	ND	0.10	ug/L	04/15/99	rm
	Fluoranthene	<1.0	1.0	ug/L	04/15/99	rm

CORE LABORATORIES

LABORATORY TEST RESULTS

Job Number: 903675

Date: 04/23/99

CUSTOMER: Marathon Oil Company PROJECT: BERTHA BARBER TANK ATTN: Mr. Paul Peacock

Customer Sample ID: MW-5
Date Sampled.....: 04/09/1999
Time Sampled.....: 14:00
Sample Matrix.....: Water

Laboratory Sample ID: 903675-5
Date Received.....: 04/10/1999
Time Received.....: 13:42

TEST METHOD	PARAMETER/TEST DESCRIPTION	SAMPLE RESULT	REPORTING LIMIT	UNITS	DATE	TECH
	Fluorene	<1.0	1.0	ug/L	04/15/99	rm
	Indeno(1,2,3-cd)pyrene	ND	0.10	ug/L	04/15/99	rm
	Naphthalene	<5.0	5.0	ug/L	04/15/99	rm
	Phenanthrene	<1.0	1.0	ug/L	04/15/99	rm
	Pyrene	<1.0	1.0	ug/L	04/15/99	rm
EPA 8260B	Volatile Organic Compounds					
	Benzene	53	5	ug/L	04/14/99	weh
	Ethylbenzene	ND	5	ug/L	04/14/99	weh
	Toluene	ND	5	ug/L	04/14/99	weh
	Xylenes (total)	<10	10	ug/L	04/14/99	weh

CORE LABORATORIES

QUALITY CONTROL RESULTS

Job Number.: 903675

Report Date.: 04/23/99

CUSTOMER: Marathon Oil Company PROJECT: Marathon Oil Co., Midland, Tx ATTN: Mr. Paul Peacock

Test Method.....: EPA 325.2
Method Description.: Chloride (Colorimetric)
Parameter.....: Chloride

Batch.....: 38316
Units.....: mg/L

Analyst...: dmw

QC	Lab ID	Reagent	QC Result	QC Result	True Value	Orig. Value	Calc. Result	*	Limits	Date	Time
ICV		V17087H	20.388512		20		101.9	%	85-115	04/15/1999	0722
ICB			-0.163170							04/15/1999	0722
MD	902905-15		4.281723			4.377734	0.096011	A	1.000000	04/15/1999	0723
MS	902905-15	V16003402	25.966507		20.000000	4.377734	107.9	%	75-125	04/15/1999	0723
CCV		V17087H	20.879337		20		104.4	%	85-115	04/15/1999	0731
CCB			-0.085526							04/15/1999	0732
MD	902907-11		5.296331			5.385501	1.7	R	20	04/15/1999	0733
MS	902907-11	V16003402	27.745121		20.000000	5.385501	111.8	%	75-125	04/15/1999	0734
CCV		V17087H	20.771732		20		103.9	%	85-115	04/15/1999	0740
CCB			-0.121136							04/15/1999	0741
MD	902910-3		26.617510			26.139927	1.8	R	20	04/15/1999	0742
MS	902910-3	V16003402	47.863895		20.000000	26.139927	108.6	%	75-125	04/15/1999	0743
CCV		V17087H	20.811174		20		104.1	%	85-115	04/15/1999	0749
CCB			-0.151905							04/15/1999	0750
MD	902911-7		2.104230			2.014703	0.089527	A	1.000000	04/15/1999	0751
MS	902911-7	V16003402	23.258398		20.000000	2.014703	106.2	%	75-125	04/15/1999	0752
CCV		V17087H	20.750908		20		103.8	%	85-115	04/15/1999	0800
CCB			0.065199							04/15/1999	0801
MD	903742-1		24.407705			24.187996	0.9	R	20	04/15/1999	0802
MS	903742-1	V16003402	45.639362		20.000000	24.187996	107.3	%	75-125	04/15/1999	0803
CCV		V17087H	21.003613		20		105.0	%	85-115	04/15/1999	0809
CCB			-0.228125							04/15/1999	0810
MD	903742-2		15.195745			15.526535	2.2	R	20	04/15/1999	0811
MS	903742-2	V16003402	34.813869		20.000000	15.526535	96.4	%	75-125	04/15/1999	0812
CCV		V17087H	20.811752		20		104.1	%	85-115	04/15/1999	0818
CCB			0.294715							04/15/1999	0819

Test Method.....: EPA 160.1
Method Description.: Solids, Total Dissolved (TDS)
Parameter.....: Solids, Total Dissolved (TDS)

Batch.....: 38455
Units.....: mg/L

Analyst...: clg

QC	Lab ID	Reagent	QC Result	QC Result	True Value	Orig. Value	Calc. Result	*	Limits	Date	Time
MB			<1.0							04/16/1999	0900
LCS		V184034A	9151		10000		91.5	%	80-120	04/16/1999	0901
MS	903639-1	V184034A	11863		10000	974	108.9	%	75-125	04/16/1999	0903
MD	903883-1		1245			1251	0.5	R	20	04/16/1999	0912

Test Method.....: EPA 150.1
Method Description.: pH
Parameter.....: pH

Batch.....: 38022
Units.....: pH Units

Analyst...: jaw

QC	Lab ID	Reagent	QC Result	QC Result	True Value	Orig. Value	Calc. Result	*	Limits	Date	Time
LCS		V16004306	6.96		7.00		99.4	%	80-120	04/10/1999	1600
MD	903675-1		6.82			6.88	0.9	R	20	04/10/1999	1600

* %=% REC, R=RPD, A=ABS Diff., D=% Diff.

CORE LABORATORIES

QUALITY CONTROL RESULTS

Job Number.: 903675

Report Date.: 04/23/99

CUSTOMER: Marathon Oil Company

PROJECT: Marathon Oil Co., Midland, Tx

ATTN: Mr. Paul Peacock

Test Method.....: EPA 6010B
Method Description.: Metals Analysis (ICAP)
Parameter.....: Aluminum (Al)

Batch.....: 38335
Units.....: mg/L

Analyst...: amw

QC	Lab ID	Reagent	QC Result	QC Result	True Value	Orig. Value	Calc. Result	*	Limits	Date	Time
CAL		ICPCALBLK	0.00139		0.00					04/15/1999	1020
CAL		ICPCALSTD	0.13099		10.0					04/15/1999	1045
ICV		V170616C	2.10952		2.00		105.5	%	90-110	04/15/1999	1051
ICB			0.22339							04/15/1999	1059
ISB		V170616D	438.26242		500.0		87.7	%	80-120	04/15/1999	1107
PB			0.19173							04/15/1999	1118
LCS		ICPSPK99	1.17099		1.000		117.1	%	80-120	04/15/1999	1126
MD	903804-5		0.23096			0.19228	0.03868	A	0.05000	04/15/1999	1143
MS	903804-5	ICPSPK99	1.26205		1.000	0.19228	107.0	%	75-125	04/15/1999	1151
ISB		V170616D	441.43414		500.0		88.3	%	80-120	04/15/1999	1239
CCV		V170616C	2.070		2.00		103.5	%	90-110	04/15/1999	1253
CCB			0.1845							04/15/1999	1301

Test Method.....: EPA 6010B
Method Description.: Metals Analysis (ICAP)
Parameter.....: Aluminum (Al)

Batch.....: 38753
Units.....: mg/L

Analyst...: chh

QC	Lab ID	Reagent	QC Result	QC Result	True Value	Orig. Value	Calc. Result	*	Limits	Date	Time
ISB		V170616D	478.52319		500.0		95.7	%	80-120	04/22/1999	1137
CCV		V170616C	1.95444		2.00		97.7	%	95-105	04/22/1999	1143
CCB			0.03141							04/22/1999	1148
PB			0.06865							04/22/1999	1209
LCS		ICPSPK99	1.06832		1.000		106.8	%	80-120	04/22/1999	1213
MD	903979-5		0.12699			0.12745	0.00046	A	0.10000	04/22/1999	1222
MS	903979-5	ICPSPK99	1.09749		1.000	0.12745	97.0	%	75-125	04/22/1999	1227
CCV		V170616C	1.98977		2.00		99.5	%	95-105	04/22/1999	1245
CCB			0.00269							04/22/1999	1256
PB			0.07831							04/22/1999	1301
LCS		ICPSPK99	1.02269		1.000		102.3	%	80-120	04/22/1999	1305
MD	904145-2		0.30758			0.31611	0.00853	A	0.10000	04/22/1999	1314
MS	904145-2	ICPSPK99	1.28619		1.000	0.31611	97.0	%	75-125	04/22/1999	1318
CCV		V170616C	1.91951		2.00		96.0	%	95-105	04/22/1999	1345
CCB			0.02512							04/22/1999	1349
EB			-0.00134							04/22/1999	1406
ISB		V170616D	476.05859		500.0		95.2	%	80-120	04/22/1999	1423
CCV		V170616C	1.98894		2.00		99.4	%	95-105	04/22/1999	1431
CCB			0.04127							04/22/1999	1436

Test Method.....: EPA 6010B
Method Description.: Metals Analysis (ICAP)
Parameter.....: Antimony (Sb)

Batch.....: 38582
Units.....: mg/L

Analyst...: chh

QC	Lab ID	Reagent	QC Result	QC Result	True Value	Orig. Value	Calc. Result	*	Limits	Date	Time
ICV		V170616C	1.97574		2.00		98.8	%	90-110	04/19/1999	1232
ICB			-0.02734							04/19/1999	1235
PB			0.01853							04/19/1999	1246
LCS		ICPSPK99	0.49857		0.5000		99.7	%	80-120	04/19/1999	1249
MD	903804-5		-0.00880			-0.00757	0.00123	A	0.10000	04/19/1999	1256
MS	903804-5	ICPSPK99	0.51494		0.5000	-0.00757	104.5	%	75-125	04/19/1999	1259

* %=% REC, R=RPD, A=ABS Diff., D=% Diff.

CORE LABORATORIES

QUALITY CONTROL RESULTS

Job Number.: 903675 Report Date.: 04/23/99

CUSTOMER: Marathon Oil Company PROJECT: Marathon Oil Co., Midland, Tx ATTN: Mr. Paul Peacock

Test Method.....: EPA 6010B Batch.....: 38582 Analyst...: chh
Method Description.: Metals Analysis (ICAP) Units.....: mg/L
Parameter.....: Antimony (Sb)

QC	Lab ID	Reagent	QC Result	QC Result	True Value	Orig. Value	Calc. Result	*	Limits	Date	Time
CCV		V170616C	1.96817		2.00		98.4	%	90-110	04/19/1999	1324
CCB			-0.02054							04/19/1999	1327

Test Method.....: EPA 6010B Batch.....: 38335 Analyst...: amw
Method Description.: Metals Analysis (ICAP) Units.....: mg/L
Parameter.....: Arsenic (As)

QC	Lab ID	Reagent	QC Result	QC Result	True Value	Orig. Value	Calc. Result	*	Limits	Date	Time
CAL		ICPCALBLK	-0.01396		0.00					04/15/1999	1020
CAL		ICPCALSTD	9.75071		10.0					04/15/1999	1036
ICV		V170616C	2.09000		2.00		104.5	%	90-110	04/15/1999	1051
ICB			0.01515							04/15/1999	1059
PB			0.01251							04/15/1999	1118
LCS		ICPSPK99	0.57523		0.5000		115.0	%	80-120	04/15/1999	1126
MD	903804-5		0.01014			0.02203	0.01189	A	0.02000	04/15/1999	1143
MS	903804-5	ICPSPK99	0.58230		0.5000	0.02203	112.1	%	75-125	04/15/1999	1151
CCV		V170616C	2.210		2.00		110.5	%	90-110	04/15/1999	1253
CCB			0.0115							04/15/1999	1301

Test Method.....: EPA 6010B Batch.....: 38309 Analyst...: pal
Method Description.: Metals Analysis (ICAP) Units.....: mg/L
Parameter.....: Barium (Ba)

QC	Lab ID	Reagent	QC Result	QC Result	True Value	Orig. Value	Calc. Result	*	Limits	Date	Time
ISB		V170616D	0.49771		0.50		99.5	%	80-120	04/14/1999	1457
CCV		V170616C	2.13449		2.00		106.7	%	90-110	04/14/1999	1505
CCB			-0.00000							04/14/1999	1509
ISB		V170616D	0.47954		0.50		95.9	%	80-120	04/14/1999	1606
CCV		V170616C	2.07495		2.00		103.7	%	90-110	04/14/1999	1614
CCB			-0.00000							04/14/1999	1619
PB			0.01423							04/14/1999	1628
LCS		ICPSPK99	0.56642		0.5000		113.3	%	80-120	04/14/1999	1633
MD	903804-5		0.02551			0.00867	0.01684	A	0.01000	04/14/1999	1642
MS	903804-5	ICPSPK99	0.52489		0.5000	0.00867	103.2	%	75-125	04/14/1999	1647
CCV		V170616C	2.06916		2.00		103.5	%	90-110	04/14/1999	1709
CCB			-0.00014							04/14/1999	1714
CCV		V170616C	2.03957		2.00		102.0	%	90-110	04/14/1999	1746
CCB			-0.00111							04/14/1999	1750
ISB		V170616D	0.48651		0.50		97.3	%	80-120	04/14/1999	1827
CCV		V170616C	2.14183		2.00		107.1	%	90-110	04/14/1999	1833
CCB			-0.00000							04/14/1999	1838

* %=% REC, R=RPD, A=ABS Diff., D=% Diff.

CORE LABORATORIES

QUALITY CONTROL RESULTS

Job Number.: 903675

Report Date.: 04/23/99

CUSTOMER: Marathon Oil Company PROJECT: Marathon Oil Co., Midland, Tx ATTN: Mr. Paul Peacock

Test Method.....: EPA 6010B
Method Description.: Metals Analysis (ICAP)
Parameter.....: Beryllium (Be)
Batch.....: 38309
Units.....: mg/L
Analyst...: pal

QC	Lab ID	Reagent	QC Result	QC Result	True Value	Orig. Value	Calc. Result	*	Limits	Date	Time
ISB		V170616D	0.49604		0.50		99.2	%	80-120	04/14/1999	1457
CCV		V170616C	2.05381		2.00		102.7	%	90-110	04/14/1999	1505
CCB			0.00020							04/14/1999	1509
ISB		V170616D	0.47565		0.50		95.1	%	80-120	04/14/1999	1606
CCV		V170616C	1.97224		2.00		98.6	%	90-110	04/14/1999	1614
CCB			0.00020							04/14/1999	1619
PB			0.00010							04/14/1999	1628
LCS		ICPSPK99	0.05046		0.05000		100.9	%	80-120	04/14/1999	1633
MD	903804-5		0.00010			0.00005	0.00005	A	0.00500	04/14/1999	1642
MS	903804-5	ICPSPK99	0.05102		0.05000	0.00005	101.9	%	75-125	04/14/1999	1647
CCV		V170616C	1.98758		2.00		99.4	%	90-110	04/14/1999	1709
CCB			0.00020							04/14/1999	1714
CCV		V170616C	1.96441		2.00		98.2	%	90-110	04/14/1999	1746
CCB			0.00025							04/14/1999	1750
ISB		V170616D	0.47766		0.50		95.5	%	80-120	04/14/1999	1827
CCV		V170616C	2.04144		2.00		102.1	%	90-110	04/14/1999	1833
CCB			0.00025							04/14/1999	1838

Test Method.....: EPA 6010B
Method Description.: Metals Analysis (ICAP)
Parameter.....: Boron (B)
Batch.....: 38567
Units.....: mg/L
Analyst...: pal

QC	Lab ID	Reagent	QC Result	QC Result	True Value	Orig. Value	Calc. Result	*	Limits	Date	Time
CAL		ICPCALBLK	0.20719							04/19/1999	1059
CAL		ICPCALSTD	1.38150		2.00					04/19/1999	1105
ICV		V170616C	2.00408		2.00		100.2	%	95-105	04/19/1999	1115
ICB			0.00323							04/19/1999	1120
CCV		V170616C	2.08788		2.00		104.4	%	95-105	04/19/1999	1446
CCB			0.00289							04/19/1999	1450
PB			-0.00068							04/19/1999	1518
LCS		ICPSPK99	0.52729		0.5000		105.5	%	80-120	04/19/1999	1523
MD	903804-5		0.01788			0.02180	0.00392	A	0.10000	04/19/1999	1532
MS	903804-5	ICPSPK99	0.52763		0.5000	0.02180	101.2	%	75-125	04/19/1999	1536
CCV		V170616C	2.07255		2.00		103.6	%	95-105	04/19/1999	1604
CCB			0.04905							04/19/1999	1608

Test Method.....: EPA 6010B
Method Description.: Metals Analysis (ICAP)
Parameter.....: Cadmium (Cd)
Batch.....: 38309
Units.....: mg/L
Analyst...: pal

QC	Lab ID	Reagent	QC Result	QC Result	True Value	Orig. Value	Calc. Result	*	Limits	Date	Time
ISB		V170616D	0.97520		1.00		97.5	%	80-120	04/14/1999	1457
CCV		V170616C	2.07710		2.00		103.9	%	90-110	04/14/1999	1505
CCB			0.00046							04/14/1999	1509
ISB		V170616D	0.93373		1.00		93.4	%	80-120	04/14/1999	1606
CCV		V170616C	2.01321		2.00		100.7	%	90-110	04/14/1999	1614
CCB			0.00046							04/14/1999	1619
PB			0.00276							04/14/1999	1628
LCS		ICPSPK99	0.05298		0.05000		106.0	%	80-120	04/14/1999	1633

* %=% REC, R=RPD, A=ABS Diff., D=% Diff.

CORE LABORATORIES

QUALITY CONTROL RESULTS

Job Number.: 903675

Report Date.: 04/23/99

CUSTOMER: Marathon Oil Company PROJECT: Marathon Oil Co., Midland, Tx ATTN: Mr. Paul Peacock

Test Method.....: EPA 6010B
Method Description.: Metals Analysis (ICAP)
Parameter.....: Cadmium (Cd)

Batch.....: 38309
Units.....: mg/L

Analyst...: pal

QC	Lab ID	Reagent	QC Result	QC Result	True Value	Orig. Value	Calc. Result	*	Limits	Date	Time
MD	903804-5		0.00034			0.00047	0.00013	A	0.00500	04/14/1999	1642
MS	903804-5	ICPSPK99	0.05362		0.05000	0.00047	106.3	%	75-125	04/14/1999	1647
CCV		V170616C	2.04947		2.00		102.5	%	90-110	04/14/1999	1709
CCB			0.00107							04/14/1999	1714
CCV		V170616C	2.02602		2.00		101.3	%	90-110	04/14/1999	1746
CCB			-0.00138							04/14/1999	1750
ISB		V170616D	0.93816		1.00		93.8	%	80-120	04/14/1999	1827
CCV		V170616C	2.09453		2.00		104.7	%	90-110	04/14/1999	1833
CCB			0.00061							04/14/1999	1838

Test Method.....: EPA 6010B
Method Description.: Metals Analysis (ICAP)
Parameter.....: Calcium (Ca)

Batch.....: 38309
Units.....: mg/L

Analyst...: pal

QC	Lab ID	Reagent	QC Result	QC Result	True Value	Orig. Value	Calc. Result	*	Limits	Date	Time
ISB		V170616D	514.57220		500.0		102.9	%	80-120	04/14/1999	1457
CCV		V170616C	2.10958		2.00		105.5	%	90-110	04/14/1999	1505
CCB			0.01044							04/14/1999	1509
ISB		V170616D	494.23913		500.0		98.8	%	80-120	04/14/1999	1606
CCV		V170616C	2.03822		2.00		101.9	%	90-110	04/14/1999	1614
CCB			0.01292							04/14/1999	1619
PB			0.06091							04/14/1999	1628
LCS		ICPSPK99	56.31085		50.000		112.6	%	80-120	04/14/1999	1633
MD	903804-5		0.12729			0.11014	0.01715	A	0.50000	04/14/1999	1642
MS	903804-5	ICPSPK99	57.29665		50.000	0.11014	114.4	%	75-125	04/14/1999	1647
CCV		V170616C	2.08994		2.00		104.5	%	90-110	04/14/1999	1709
CCB			0.01392							04/14/1999	1714
CCV		V170616C	2.05264		2.00		102.6	%	90-110	04/14/1999	1746
CCB			0.01168							04/14/1999	1750
ISB		V170616D	496.68359		500.0		99.3	%	80-120	04/14/1999	1827
CCV		V170616C	2.13245		2.00		106.6	%	90-110	04/14/1999	1833
CCB			0.01765							04/14/1999	1838

Test Method.....: EPA 6010B
Method Description.: Metals Analysis (ICAP)
Parameter.....: Calcium (Ca)

Batch.....: 38636
Units.....: mg/L

Analyst...: pal

QC	Lab ID	Reagent	QC Result	QC Result	True Value	Orig. Value	Calc. Result	*	Limits	Date	Time
CAL		ICPCALBLK	0.00980		0.00					04/20/1999	0937
CAL		ICPCALSTD	28.42049		50.00					04/20/1999	0941
ICV		V170616C	1.99027		2.00		99.5	%	90-110	04/20/1999	0954
ICB			-0.00351							04/20/1999	0959
ISB		V170616D	476.91851		500.0		95.4	%	80-120	04/20/1999	1003
PB			0.28246							04/20/1999	1007
LCS		ICPSPK99	50.98290		50.000		102.0	%	80-120	04/20/1999	1012
MD	903979-5		0.19182			0.23758	0.04576	A	0.50000	04/20/1999	1021
MS	903979-5	ICPSPK99	51.26184		50.000	0.23758	102.0	%	75-125	04/20/1999	1025
CCV		V170616C	1.99625		2.00		99.8	%	90-110	04/20/1999	1051
CCB			0.00105							04/20/1999	1055

* %=% REC, R=RPD, A=ABS Diff., D=% Diff.

CORE LABORATORIES

QUALITY CONTROL RESULTS

Job Number.: 903675

Report Date.: 04/23/99

CUSTOMER: Marathon Oil Company PROJECT: Marathon Oil Co., Midland, Tx ATTN: Mr. Paul Peacock

Test Method.....: EPA 6010B
Method Description.: Metals Analysis (ICAP)
Parameter.....: Calcium (Ca)

Batch.....: 38636
Units.....: mg/L

Analyst...: pal

QC	Lab ID	Reagent	QC Result	QC Result	True Value	Orig. Value	Calc. Result	*	Limits	Date	Time
EB			0.22174							04/20/1999	1140
CCV		V170616C	1.99467		2.00		99.7	%	90-110	04/20/1999	1144
CCB			0.01179							04/20/1999	1148
ISB		V170616D	459.72149		500.0		91.9	%	80-120	04/20/1999	1210
CCV		V170616C	1.96545		2.00		98.3	%	90-110	04/20/1999	1218
CCB			0.00809							04/20/1999	1223
CCV		V170616C	1.92392		2.00		96.2	%	90-110	04/20/1999	1353
CCB			0.00263							04/20/1999	1357
CCV		V170616C	1.90298		2.00		95.1	%	90-110	04/20/1999	1445
CCB			0.00316							04/20/1999	1449
EB			0.05508							04/20/1999	1512
ISB		V170616D	452.31146		500.0		90.5	%	80-120	04/20/1999	1529
CCV		V170616C	1.88274		2.00		94.1	%	90-110	04/20/1999	1537
CCB			0.00545							04/20/1999	1542

Test Method.....: EPA 6010B
Method Description.: Metals Analysis (ICAP)
Parameter.....: Calcium (Ca)

Batch.....: 38803
Units.....: mg/L

Analyst...: pal

QC	Lab ID	Reagent	QC Result	QC Result	True Value	Orig. Value	Calc. Result	*	Limits	Date	Time
ICV		V170616C	1.85818		2.00		92.9	%	90-110	04/22/1999	1636
ICB			-0.00055							04/22/1999	1640
ISB		V170616D	411.23718		500.0		82.2	%	80-120	04/22/1999	1645
PB			0.20574							04/22/1999	1653
LCS		ICPSPK99	45.64707		50.000		91.3	%	80-120	04/22/1999	1658
MD	903979-5		0.12926			0.19894	0.06968	A	0.50000	04/22/1999	1707
MS	903979-5	ICPSPK99	45.58161		50.000	0.19894	90.8	%	75-125	04/22/1999	1712
CCV		V170616C	1.93798		2.00		96.9	%	90-110	04/22/1999	1721
CCB			-0.00147							04/22/1999	1725

Test Method.....: EPA 6010B
Method Description.: Metals Analysis (ICAP)
Parameter.....: Chromium (Cr)

Batch.....: 38309
Units.....: mg/L

Analyst...: pal

QC	Lab ID	Reagent	QC Result	QC Result	True Value	Orig. Value	Calc. Result	*	Limits	Date	Time
ISB		V170616D	0.48358		0.50		96.7	%	80-120	04/14/1999	1457
CCV		V170616C	2.07890		2.00		103.9	%	90-110	04/14/1999	1505
CCB			0.00764							04/14/1999	1509
ISB		V170616D	0.47050		0.50		94.1	%	80-120	04/14/1999	1606
CCV		V170616C	2.01731		2.00		100.9	%	90-110	04/14/1999	1614
CCB			0.00108							04/14/1999	1619
PB			0.00327							04/14/1999	1628
LCS		ICPSPK99	0.21617		0.2000		108.1	%	80-120	04/14/1999	1633
MD	903804-5		0.00027			-0.00054	0.00081	A	0.01000	04/14/1999	1642
MS	903804-5	ICPSPK99	0.21561		0.2000	-0.00054	108.1	%	75-125	04/14/1999	1647
CCV		V170616C	2.04540		2.00		102.3	%	90-110	04/14/1999	1709
CCB			0.00109							04/14/1999	1714
CCV		V170616C	2.01705		2.00		100.9	%	90-110	04/14/1999	1746
CCB			0.00437							04/14/1999	1750

* %=% REC, R=RPD, A=ABS Diff., D=% Diff.

CORE LABORATORIES

QUALITY CONTROL RESULTS

Job Number.: 903675 Report Date.: 04/23/99

CUSTOMER: Marathon Oil Company PROJECT: Marathon Oil Co., Midland, Tx ATTN: Mr. Paul Peacock

Test Method.....: EPA 6010B Batch.....: 38309 Analyst...: pal
Method Description.: Metals Analysis (ICAP) Units.....: mg/L
Parameter.....: Chromium (Cr)

QC	Lab ID	Reagent	QC Result	QC Result	True Value	Orig. Value	Calc. Result	*	Limits	Date	Time
ISB		V170616D	0.47214		0.50		94.4	%	80-120	04/14/1999	1827
CCV		V170616C	2.07945		2.00		104.0	%	90-110	04/14/1999	1833
CCB			0.00245							04/14/1999	1838

Test Method.....: EPA 6010B Batch.....: 38309 Analyst...: pal
Method Description.: Metals Analysis (ICAP) Units.....: mg/L
Parameter.....: Cobalt (Co)

QC	Lab ID	Reagent	QC Result	QC Result	True Value	Orig. Value	Calc. Result	*	Limits	Date	Time
ISB		V170616D	0.48045		0.50		96.1	%	80-120	04/14/1999	1457
CCV		V170616C	2.08880		2.00		104.4	%	90-110	04/14/1999	1505
CCB			0.00119							04/14/1999	1509
ISB		V170616D	0.46247		0.50		92.5	%	80-120	04/14/1999	1606
CCV		V170616C	2.01606		2.00		100.8	%	90-110	04/14/1999	1614
CCB			0.00319							04/14/1999	1619
PB			0.00039							04/14/1999	1628
LCS		ICPSPK99	0.53953		0.5000		107.9	%	80-120	04/14/1999	1633
MD	903804-5		0.00239			0.00039	0.00200	A	0.03000	04/14/1999	1642
MS	903804-5	ICPSPK99	0.54712		0.5000	0.00039	109.3	%	75-125	04/14/1999	1647
CCV		V170616C	2.04643		2.00		102.3	%	90-110	04/14/1999	1709
CCB			-0.00100							04/14/1999	1714
CCV		V170616C	2.01486		2.00		100.7	%	90-110	04/14/1999	1746
CCB			0.00099							04/14/1999	1750
ISB		V170616D	0.46527		0.50		93.1	%	80-120	04/14/1999	1827
CCV		V170616C	2.08960		2.00		104.5	%	90-110	04/14/1999	1833
CCB			-0.00020							04/14/1999	1838

Test Method.....: EPA 6010B Batch.....: 38309 Analyst...: pal
Method Description.: Metals Analysis (ICAP) Units.....: mg/L
Parameter.....: Copper (Cu)

QC	Lab ID	Reagent	QC Result	QC Result	True Value	Orig. Value	Calc. Result	*	Limits	Date	Time
ISB		V170616D	0.49726		0.50		99.5	%	80-120	04/14/1999	1457
CCV		V170616C	2.03862		2.00		101.9	%	90-110	04/14/1999	1505
CCB			0.00060							04/14/1999	1509
ISB		V170616D	0.48388		0.50		96.8	%	80-120	04/14/1999	1606
CCV		V170616C	1.96897		2.00		98.4	%	90-110	04/14/1999	1614
CCB			0.00425							04/14/1999	1619
PB			0.00182							04/14/1999	1628
LCS		ICPSPK99	0.25517		0.2500		102.1	%	80-120	04/14/1999	1633
MD	903804-5		0.00851			0.00912	0.00061	A	0.01000	04/14/1999	1642
MS	903804-5	ICPSPK99	0.26277		0.2500	0.00912	101.5	%	75-125	04/14/1999	1647
CCV		V170616C	1.95833		2.00		97.9	%	90-110	04/14/1999	1709
CCB			0.00121							04/14/1999	1714
CCV		V170616C	1.93521		2.00		96.8	%	90-110	04/14/1999	1746
CCB			-0.00030							04/14/1999	1750
ISB		V170616D	0.48296		0.50		96.6	%	80-120	04/14/1999	1827
CCV		V170616C	2.01125		2.00		100.6	%	90-110	04/14/1999	1833
CCB			0.00060							04/14/1999	1838

* %=% REC, R=RPD, A=ABS Diff., D=% Diff.

CORE LAB

CORE LABORATORIES

QUALITY CONTROL RESULTS

Job Number.: 903675

Report Date.: 04/23/99

CUSTOMER: Marathon Oil Company PROJECT: Marathon Oil Co., Midland, Tx ATTN: Mr. Paul Peacock

Test Method.....: EPA 6010B
Method Description.: Metals Analysis (ICAP)
Parameter.....: Iron (Fe)
Batch.....: 38309
Units.....: mg/L
Analyst...: pal

QC	Lab ID	Reagent	QC Result	QC Result	True Value	Orig. Value	Calc. Result	*	Limits	Date	Time
ISB		V170616D	186.90142		200.0		93.5	%	80-120	04/14/1999	1457
CCV		V170616C	2.02648		2.00		101.3	%	90-110	04/14/1999	1505
CCB			0.00810							04/14/1999	1509
ISB		V170616D	179.72509		200.0		89.9	%	80-120	04/14/1999	1606
CCV		V170616C	1.95128		2.00		97.6	%	90-110	04/14/1999	1614
CCB			0.00195							04/14/1999	1619
PB			0.08003							04/14/1999	1628
LCS		ICPSPK99	0.52955		0.5000		105.9	%	80-120	04/14/1999	1633
MD	903804-5		0.78301			0.92799	16.9	R	20	04/14/1999	1642
MS	903804-5	ICPSPK99	1.33198		0.5000	0.92799	80.8	%	75-125	04/14/1999	1647
CCV		V170616C	1.97719		2.00		98.9	%	90-110	04/14/1999	1709
CCB			0.00335							04/14/1999	1714
CCV		V170616C	1.93358		2.00		96.7	%	90-110	04/14/1999	1746
CCB			-0.00279							04/14/1999	1750
ISB		V170616D	180.95837		200.0		90.5	%	80-120	04/14/1999	1827
CCV		V170616C	2.02626		2.00		101.3	%	90-110	04/14/1999	1833
CCB			0.00265							04/14/1999	1838

Test Method.....: EPA 6010B
Method Description.: Metals Analysis (ICAP)
Parameter.....: Lead (Pb)
Batch.....: 38309
Units.....: mg/L
Analyst...: pal

QC	Lab ID	Reagent	QC Result	QC Result	True Value	Orig. Value	Calc. Result	*	Limits	Date	Time
ISB		V170616D	1.01164		1.00		101.2	%	80-120	04/14/1999	1457
CCV		V170616C	1.90419		2.00		95.2	%	90-110	04/14/1999	1505
CCB			-0.04202							04/14/1999	1509
ISB		V170616D	0.94836		1.00		94.8	%	80-120	04/14/1999	1606
CCV		V170616C	1.90264		2.00		95.1	%	90-110	04/14/1999	1614
CCB			-0.03706							04/14/1999	1619
PB			0.01225							04/14/1999	1628
LCS		ICPSPK99	0.46746		0.5000		93.5	%	80-120	04/14/1999	1633
MD	903804-5		-0.02770			-0.03516	0.00746	A	0.05000	04/14/1999	1642
MS	903804-5	ICPSPK99	0.53585		0.5000	-0.03516	114.2	%	75-125	04/14/1999	1647
CCV		V170616C	1.96704		2.00		98.4	%	90-110	04/14/1999	1709
CCB			-0.01896							04/14/1999	1714
CCV		V170616C	1.85855		2.00		92.9	%	90-110	04/14/1999	1746
CCB			-0.03543							04/14/1999	1750
ISB		V170616D	0.95904		1.00		95.9	%	80-120	04/14/1999	1827
CCV		V170616C	1.93055		2.00		96.5	%	90-110	04/14/1999	1833
CCB			-0.00495							04/14/1999	1838

Test Method.....: EPA 6010B
Method Description.: Metals Analysis (ICAP)
Parameter.....: Magnesium (Mg)
Batch.....: 38309
Units.....: mg/L
Analyst...: pal

QC	Lab ID	Reagent	QC Result	QC Result	True Value	Orig. Value	Calc. Result	*	Limits	Date	Time
ISB		V170616D	529.14654		500.0		105.8	%	80-120	04/14/1999	1457
CCV		V170616C	1.94145		2.00		97.1	%	90-110	04/14/1999	1505
CCB			-0.00213							04/14/1999	1509

* %=% REC, R=RPD, A=ABS Diff., D=% Diff.

CORE LABORATORIES

QUALITY CONTROL RESULTS

Job Number.: 903675

Report Date.: 04/23/99

CUSTOMER: Marathon Oil Company PROJECT: Marathon Oil Co., Midland, Tx ATTN: Mr. Paul Peacock

Test Method.....: EPA 6010B
Method Description.: Metals Analysis (ICAP)
Parameter.....: Magnesium (Mg)

Batch.....: 38309
Units.....: mg/L

Analyst...: pal

QC	Lab ID	Reagent	QC Result	QC Result	True Value	Orig. Value	Calc. Result	*	Limits	Date	Time
ISB		V170616D	509.64001		500.0		101.9	%	80-120	04/14/1999	1606
CCV		V170616C	1.90751		2.00		95.4	%	90-110	04/14/1999	1614
CCB			0.02489							04/14/1999	1619
PB			0.01156							04/14/1999	1628
LCS		ICPSPK99	53.99058		50.000		108.0	%	80-120	04/14/1999	1633
MD	903804-5		0.01424			-0.01421	0.02845	A	0.10000	04/14/1999	1642
MS	903804-5	ICPSPK99	54.41831		50.000	-0.01421	108.9	%	75-125	04/14/1999	1647
CCV		V170616C	1.90318		2.00		95.2	%	90-110	04/14/1999	1709
CCB			-0.00204							04/14/1999	1714
CCV		V170616C	1.87392		2.00		93.7	%	90-110	04/14/1999	1746
CCB			0.00204							04/14/1999	1750
ISB		V170616D	514.35369		500.0		102.9	%	80-120	04/14/1999	1827
CCV		V170616C	1.94244		2.00		97.1	%	90-110	04/14/1999	1833
CCB			0.00195							04/14/1999	1838

Test Method.....: EPA 6010B
Method Description.: Metals Analysis (ICAP)
Parameter.....: Manganese (Mn)

Batch.....: 38309
Units.....: mg/L

Analyst...: pal

QC	Lab ID	Reagent	QC Result	QC Result	True Value	Orig. Value	Calc. Result	*	Limits	Date	Time
ISB		V170616D	0.47289		0.50		94.6	%	80-120	04/14/1999	1457
CCV		V170616C	1.93210		2.00		96.6	%	90-110	04/14/1999	1505
CCB			0.00097							04/14/1999	1509
ISB		V170616D	0.45480		0.50		91.0	%	80-120	04/14/1999	1606
CCV		V170616C	1.86157		2.00		93.1	%	90-110	04/14/1999	1614
CCB			0.00000							04/14/1999	1619
PB			0.00123							04/14/1999	1628
LCS		ICPSPK99	0.49141		0.5000		98.3	%	80-120	04/14/1999	1633
MD	903804-5		0.00598			0.00552	0.00046	A	0.01000	04/14/1999	1642
MS	903804-5	ICPSPK99	0.50274		0.5000	0.00552	99.4	%	75-125	04/14/1999	1647
CCV		V170616C	1.88417		2.00		94.2	%	90-110	04/14/1999	1709
CCB			0.00073							04/14/1999	1714
CCV		V170616C	1.86179		2.00		93.1	%	90-110	04/14/1999	1746
CCB			0.00024							04/14/1999	1750
ISB		V170616D	0.45673		0.50		91.3	%	80-120	04/14/1999	1827
CCV		V170616C	1.92990		2.00		96.5	%	90-110	04/14/1999	1833
CCB			0.00097							04/14/1999	1838

Test Method.....: EPA 7470
Method Description.: Mercury, Total
Parameter.....: Mercury (Hg)

Batch.....: 38400
Units.....: mg/L

Analyst...: pal

QC	Lab ID	Reagent	QC Result	QC Result	True Value	Orig. Value	Calc. Result	*	Limits	Date	Time
CAL		HGCALBLK	4246		0.000					04/15/1999	1013
CAL		V170616F	10202		0.000200					04/15/1999	1017
CAL		V170616F	65376		0.001000					04/15/1999	1021
CAL		V170616F	319851		0.005000					04/15/1999	1024
CAL		V170616F	610958		0.010000					04/15/1999	1028
CAL		V170616F	1297477		0.020000					04/15/1999	1032

* %=% REC, R=RPD, A=ABS Diff., D=% Diff.

CORELAB

CORE LABORATORIES

QUALITY CONTROL RESULTS

Job Number.: 903675

Report Date.: 04/23/99

CUSTOMER: Marathon Oil Company

PROJECT: Marathon Oil Co., Midland, Tx ATTN: Mr. Paul Peacock

Test Method.....: EPA 7470
Method Description.: Mercury, Total
Parameter.....: Mercury (Hg)

Batch.....: 38400
Units.....: mg/L

Analyst...: pal

QC	Lab ID	Reagent	QC Result	QC Result	True Value	Orig. Value	Calc. Result	*	Limits	Date	Time
ICV		V170616G	0.00493		0.005000		98.6	%	90-110	04/15/1999	1036
ICB			0.000022							04/15/1999	1039
PB			0.0001							04/15/1999	1043
LCS		V170616G	0.00559		0.005000		111.8	%	80-120	04/15/1999	1047
MD	903580-1		0.0001			0.0001	0.0000	A	0.0010	04/15/1999	1054
MS	903580-1	V170616G	0.00480		0.005000	0.0001	94.0	%	75-125	04/15/1999	1058
CCV		V170616F	0.00982		0.010000		98.2	%	90-110	04/15/1999	1121
CCB			0.000024							04/15/1999	1124
CCV		V170616F	0.0102		0.010000		102.0	%	90-110	04/15/1999	1206
CCB			0.000027							04/15/1999	1209
PB			0.00013							04/15/1999	1224
LCS		V170616G	0.00581		0.005000		116.2	%	80-120	04/15/1999	1228
MD	903774-1		0.00038			0.00038	0.00000	A	0.00100	04/15/1999	1236
MS	903774-1	V170616G	0.00500		0.005000	0.00038	92.4	%	75-125	04/15/1999	1239
CCV		V170616F	0.0103		0.010000		103.0	%	90-110	04/15/1999	1251
CCB			0.000082							04/15/1999	1254
CCV		V170616F	0.0101		0.010000		101.0	%	90-110	04/15/1999	1336
CCB			0.000107							04/15/1999	1339
CCV		V170616F	0.0100		0.010000		100.0	%	90-110	04/15/1999	1343
CCB			0.00003							04/15/1999	1347
PB			0.0001							04/15/1999	1406
MD	903609-1		0.000047			0.00009	0.000043	A	0.001000	04/15/1999	1417
MS	903609-1	V170616G	0.00513		0.005000	0.00009	100.8	%	75-125	04/15/1999	1421
CCV		V170616F	0.0100		0.010000		100.0	%	90-110	04/15/1999	1428
CCB			0.000102							04/15/1999	1432
CCV		V170616F	0.00985		0.010000		98.5	%	90-110	04/15/1999	1513
CCB			0.000009							04/15/1999	1517
CCV		V170616F	0.0100		0.010000		100.0	%	90-110	04/15/1999	1551
CCB			0.000026							04/15/1999	1555
PB			0.00005							04/15/1999	1558
LCS		V170616G	0.00471		0.005000		94.2	%	80-120	04/15/1999	1602
MD	902905-1		0.000125			0.000107	0.000018	A	0.001000	04/15/1999	1610
MS	902905-1	V170616G	0.00530		0.005000	0.000107	103.9	%	75-125	04/15/1999	1613
CCV		V170616F	0.00980		0.010000		98.0	%	90-110	04/15/1999	1636
CCB			0.000041							04/15/1999	1640
CCV		V170616F	0.00901		0.010000		90.1	%	90-110	04/15/1999	1721
CCB			0.00005							04/15/1999	1725
LCS		V170616G	0.00480		0.005000		96.0	%	80-120	04/15/1999	1728
CCV		V170616F	0.00918		0.010000		91.8	%	90-110	04/15/1999	1732
CCB			0.000038							04/15/1999	1736

Test Method.....: EPA 6010B
Method Description.: Metals Analysis (ICAP)
Parameter.....: Molybdenum (Mo)

Batch.....: 38582
Units.....: mg/L

Analyst...: chh

QC	Lab ID	Reagent	QC Result	QC Result	True Value	Orig. Value	Calc. Result	*	Limits	Date	Time
CCV		V170616C	2.05419		2.00		102.7	%	90-110	04/19/1999	1324
CCB			0.09098							04/19/1999	1327
ICV		V170616C	2.02167		2.00		101.1	%	90-110	04/19/1999	1449
ICB			0.05579							04/19/1999	1452
CCV		V170616C	1.99460		2.00		99.7	%	90-110	04/19/1999	1514

* %=% REC, R=RPD, A=ABS Diff., D=% Diff.

CORE LABORATORIES

QUALITY CONTROL RESULTS

Job Number.: 903675 Report Date.: 04/23/99

CUSTOMER: Marathon Oil Company PROJECT: Marathon Oil Co., Midland, Tx ATTN: Mr. Paul Peacock

Test Method.....: EPA 6010B Batch.....: 38582 Analyst...: chh
Method Description.: Metals Analysis (ICAP) Units.....: mg/L
Parameter.....: Molybdenum (Mo)

QC	Lab ID	Reagent	QC Result	QC Result	True Value	Orig. Value	Calc. Result	*	Limits	Date	Time
CCB			0.06511							04/19/1999	1517
CCV		V170616C	2.01009		2.00		100.5	%	90-110	04/19/1999	1541
CCB			0.05697							04/19/1999	1544
PB			0.00148							04/19/1999	1548
LCS		ICPSPK99	0.43457		0.5000		86.9	%	80-120	04/19/1999	1551
MD	903804-5		0.00477			0.03192	0.02715	A	0.05000	04/19/1999	1556
MS	903804-5	ICPSPK99	0.43394		0.5000	0.03192	80.4	%	75-125	04/19/1999	1559
CCV		V170616C	1.89356		2.00		94.7	%	90-110	04/19/1999	1614
CCB			0.06385							04/19/1999	1617

Test Method.....: EPA 6010B Batch.....: 38309 Analyst...: pal
Method Description.: Metals Analysis (ICAP) Units.....: mg/L
Parameter.....: Nickel (Ni)

QC	Lab ID	Reagent	QC Result	QC Result	True Value	Orig. Value	Calc. Result	*	Limits	Date	Time
ISB		V170616D	0.96117		1.00		96.1	%	80-120	04/14/1999	1457
CCV		V170616C	2.03415		2.00		101.7	%	90-110	04/14/1999	1505
CCB			0.00126							04/14/1999	1509
ISB		V170616D	0.92438		1.00		92.4	%	80-120	04/14/1999	1606
CCV		V170616C	1.96033		2.00		98.0	%	90-110	04/14/1999	1614
CCB			-0.00000							04/14/1999	1619
PB			-0.00075							04/14/1999	1628
LCS		ICPSPK99	0.53281		0.5000		106.6	%	80-120	04/14/1999	1633
MD	903804-5		0.00252			0.00733	0.00481	A	0.01000	04/14/1999	1642
MS	903804-5	ICPSPK99	0.53661		0.5000	0.00733	105.9	%	75-125	04/14/1999	1647
CCV		V170616C	1.99395		2.00		99.7	%	90-110	04/14/1999	1709
CCB			0.00328							04/14/1999	1714
CCV		V170616C	1.97197		2.00		98.6	%	90-110	04/14/1999	1746
CCB			0.00455							04/14/1999	1750
ISB		V170616D	0.92428		1.00		92.4	%	80-120	04/14/1999	1827
CCV		V170616C	2.03971		2.00		102.0	%	90-110	04/14/1999	1833
CCB			0.00202							04/14/1999	1838

Test Method.....: EPA 6010B Batch.....: 38309 Analyst...: pal
Method Description.: Metals Analysis (ICAP) Units.....: mg/L
Parameter.....: Potassium (K)

QC	Lab ID	Reagent	QC Result	QC Result	True Value	Orig. Value	Calc. Result	*	Limits	Date	Time
CCV		V170616C	19.74876		20.00		98.7	%	90-110	04/14/1999	1505
CCB			0.04433							04/14/1999	1509
CCV		V170616C	19.09852		20.00		95.5	%	90-110	04/14/1999	1614
CCB			0.11576							04/14/1999	1619
PB			0.20935							04/14/1999	1628
LCS		ICPSPK99	51.10098		50.000		102.2	%	80-120	04/14/1999	1633
MD	903804-5		0.19704			0.20443	0.00739	A	0.50000	04/14/1999	1642
MS	903804-5	ICPSPK99	51.12068		50.000	0.20443	101.8	%	75-125	04/14/1999	1647
CCV		V170616C	19.00492		20.00		95.0	%	90-110	04/14/1999	1709
CCB			-0.02955							04/14/1999	1714
CCV		V170616C	18.70689		20.00		93.5	%	90-110	04/14/1999	1746

* %=% REC, R=RPD, A=ABS Diff., D=% Diff.

CORE LABORATORIES

QUALITY CONTROL RESULTS

Job Number.: 903675 Report Date.: 04/23/99

CUSTOMER: Marathon Oil Company PROJECT: Marathon Oil Co., Midland, Tx ATTN: Mr. Paul Peacock

Test Method.....: EPA 6010B Batch.....: 38309 Analyst...: pal
Method Description.: Metals Analysis (ICAP) Units.....: mg/L
Parameter.....: Potassium (K)

QC	Lab ID	Reagent	QC Result	QC Result	True Value	Orig. Value	Calc. Result	*	Limits	Date	Time
CCB			0.04926							04/14/1999	1750
CCV		V170616C	19.60098		20.00		98.0	%	90-110	04/14/1999	1833
CCB			0.02955							04/14/1999	1838

Test Method.....: EPA 6010B Batch.....: 38335 Analyst...: amw
Method Description.: Metals Analysis (ICAP) Units.....: mg/L
Parameter.....: Selenium (Se)

QC	Lab ID	Reagent	QC Result	QC Result	True Value	Orig. Value	Calc. Result	*	Limits	Date	Time
CAL		ICPCALBLK	-0.01392		0.00					04/15/1999	1020
CAL		ICPCALSTD	3.84269		4.00					04/15/1999	1042
ICV		V170616C	1.96371		2.00		98.2	%	90-110	04/15/1999	1051
ICB			0.01284							04/15/1999	1059
PB			0.00374							04/15/1999	1118
LCS		ICPSPK99	0.53041		0.5000		106.1	%	80-120	04/15/1999	1126
MD	903804-5		0.02230			0.03002	0.00772	A	0.02000	04/15/1999	1143
MS	903804-5	ICPSPK99	0.55062		0.5000	0.03002	104.1	%	75-125	04/15/1999	1151
CCV		V170616C	2.066		2.00		103.3	%	90-110	04/15/1999	1253
CCB			0.0314							04/15/1999	1301

Test Method.....: EPA 6010B Batch.....: 38713 Analyst...: pal
Method Description.: Metals Analysis (ICAP) Units.....: mg/L
Parameter.....: Selenium (Se)

QC	Lab ID	Reagent	QC Result	QC Result	True Value	Orig. Value	Calc. Result	*	Limits	Date	Time
CAL		ICPCALBLK	-0.00142		0.00					04/21/1999	2225
CAL		ICPCALSTD	1.44917		4.00					04/21/1999	2244
ICV		V170616C	2.06236		2.00		103.1	%	95-105	04/21/1999	2255
ICB			0.00719							04/21/1999	2303
PB			-0.00703							04/21/1999	2323
LCS		ICPSPK99	0.52694		0.5000		105.4	%	80-120	04/21/1999	2331
MD	903979-5		-0.00177			0.01183	0.01360	A	0.01000	04/21/1999	2348
MS	903979-5	ICPSPK99	0.51494		0.5000	0.01183	100.6	%	75-125	04/21/1999	2356
CCV		V170616C	2.02105		2.00		101.1	%	95-105	04/22/1999	0038
CCB			0.03598							04/22/1999	0046

Test Method.....: EPA 6010B Batch.....: 38309 Analyst...: pal
Method Description.: Metals Analysis (ICAP) Units.....: mg/L
Parameter.....: Silver (Ag)

QC	Lab ID	Reagent	QC Result	QC Result	True Value	Orig. Value	Calc. Result	*	Limits	Date	Time
ISB		V170616D	1.00602		1.00		100.6	%	80-120	04/14/1999	1457
CCV		V170616C	2.01905		2.00		101.0	%	90-110	04/14/1999	1505
CCB			0.00429							04/14/1999	1509
ISB		V170616D	0.96581		1.00		96.6	%	80-120	04/14/1999	1606
CCV		V170616C	1.97072		2.00		98.5	%	90-110	04/14/1999	1614
CCB			0.00230							04/14/1999	1619

* %=% REC, R=RPD, A=ABS Diff., D=% Diff.

CORELAB

CORE LABORATORIES

QUALITY CONTROL RESULTS

Job Number.: 903675 Report Date.: 04/23/99

CUSTOMER: Marathon Oil Company PROJECT: Marathon Oil Co., Midland, Tx ATTN: Mr. Paul Peacock

Test Method.....: EPA 6010B Batch.....: 38309 Analyst...: pal
Method Description.: Metals Analysis (ICAP) Units.....: mg/L
Parameter.....: Silver (Ag)

QC	Lab ID	Reagent	QC Result	QC Result	True Value	Orig. Value	Calc. Result	*	Limits	Date	Time
PB			0.00368							04/14/1999	1628
LCS		ICPSPK99	0.21497		0.2000		107.5	%	80-120	04/14/1999	1633
MD	903804-5		0.02212			0.00939	0.01273	A	0.01000	04/14/1999	1642
MS	903804-5	ICPSPK99	0.21485		0.2000	0.00939	102.7	%	75-125	04/14/1999	1647
CCV		V170616C	1.98576		2.00		99.3	%	90-110	04/14/1999	1709
CCB			-0.00168							04/14/1999	1714
CCV		V170616C	1.96197		2.00		98.1	%	90-110	04/14/1999	1746
CCB			0.00107							04/14/1999	1750
ISB		V170616D	0.97787		1.00		97.8	%	80-120	04/14/1999	1827
CCV		V170616C	2.03332		2.00		101.7	%	90-110	04/14/1999	1833
CCB			0.00352							04/14/1999	1838

Test Method.....: EPA 6010B Batch.....: 38582 Analyst...: chh
Method Description.: Metals Analysis (ICAP) Units.....: mg/L
Parameter.....: Sodium (Na)

QC	Lab ID	Reagent	QC Result	QC Result	True Value	Orig. Value	Calc. Result	*	Limits	Date	Time
ICV		V170616C	2.14507		2.00		107.3	%	90-110	04/19/1999	1232
ICB			0.01013							04/19/1999	1235
PB			0.81863							04/19/1999	1246
LCS		ICPSPK99	49.21278		50.000		98.4	%	80-120	04/19/1999	1249
MD	903804-5		0.83620			0.87708	0.04088	A	0.50000	04/19/1999	1256
MS	903804-5	ICPSPK99	53.03534		50.000	0.87708	104.3	%	75-125	04/19/1999	1259
CCV		V170616C	1.94371		2.00		97.2	%	90-110	04/19/1999	1324
CCB			0.00979							04/19/1999	1327
CCV		V170616C	1.81667		2.00		90.8	%	90-110	04/19/1999	1404
CCB			0.02838							04/19/1999	1408

Test Method.....: EPA 6010B Batch.....: 38335 Analyst...: amw
Method Description.: Metals Analysis (ICAP) Units.....: mg/L
Parameter.....: Thallium (Tl)

QC	Lab ID	Reagent	QC Result	QC Result	True Value	Orig. Value	Calc. Result	*	Limits	Date	Time
CAL		ICPCALBLK	0.02229		0.00					04/15/1999	1020
CAL		ICPCALSTD	3.10299		4.00					04/15/1999	1033
ICV		V170616C	2.07268		2.00		103.6	%	90-110	04/15/1999	1051
ICB			0.00567							04/15/1999	1059
PB			-0.00610							04/15/1999	1118
LCS		ICPSPK99	0.54493		0.5000		109.0	%	80-120	04/15/1999	1126
MD	903804-5		-0.01009			-0.01395	0.00386	A	0.02000	04/15/1999	1143
MS	903804-5	ICPSPK99	0.56159		0.5000	-0.01395	115.1	%	75-125	04/15/1999	1151
CCV		V170616C	2.135		2.00		106.8	%	90-110	04/15/1999	1253
CCB			-0.0078							04/15/1999	1301

* %=% REC, R=RPD, A=ABS Diff., D=% Diff.

CORELAB

CORE LABORATORIES

QUALITY CONTROL RESULTS

Job Number.: 903675

Report Date.: 04/23/99

CUSTOMER: Marathon Oil Company

PROJECT: Marathon Oil Co., Midland, Tx ATTN: Mr. Paul Peacock

Test Method.....: EPA 6010B
Method Description.: Metals Analysis (ICAP)
Parameter.....: Vanadium (V)

Batch.....: 38335
Units.....: mg/L

Analyst...: amw

QC	Lab ID	Reagent	QC Result	QC Result	True Value	Orig. Value	Calc. Result	*	Limits	Date	Time
CAL		ICPCALBLK	-0.00190		0.00					04/15/1999	1020
CAL		ICPCALSTD	0.10869		1.00					04/15/1999	1039
ICV		V170616C	2.02169		2.00		101.1	%	90-110	04/15/1999	1051
ICB			0.01175							04/15/1999	1059
ISB		V170616D	0.55153		0.50		110.3	%	80-120	04/15/1999	1107
PB			0.04068							04/15/1999	1118
LCS		ICPSPK99	0.58499		0.5000		117.0	%	80-120	04/15/1999	1126
MD	903804-5		0.01808			0.02169	0.00361	A	0.05000	04/15/1999	1143
MS	903804-5	ICPSPK99	0.61211		0.5000	0.02169	118.1	%	75-125	04/15/1999	1151
ISB		V170616D	0.55877		0.50		111.8	%	80-120	04/15/1999	1239
CCV		V170616C	2.107		2.00		105.3	%	90-110	04/15/1999	1253
CCB			0.0262							04/15/1999	1301

Test Method.....: EPA 6010B
Method Description.: Metals Analysis (ICAP)
Parameter.....: Zinc (Zn)

Batch.....: 38309
Units.....: mg/L

Analyst...: pal

QC	Lab ID	Reagent	QC Result	QC Result	True Value	Orig. Value	Calc. Result	*	Limits	Date	Time
ISB		V170616D	1.02761		1.00		102.8	%	80-120	04/14/1999	1457
CCV		V170616C	2.02379		2.00		101.2	%	90-110	04/14/1999	1505
CCB			0.00098							04/14/1999	1509
ISB		V170616D	0.97643		1.00		97.6	%	80-120	04/14/1999	1606
CCV		V170616C	1.95226		2.00		97.6	%	90-110	04/14/1999	1614
CCB			0.00294							04/14/1999	1619
PB			-0.00145							04/14/1999	1628
LCS		ICPSPK99	0.52434		0.5000		104.9	%	80-120	04/14/1999	1633
MD	903804-5		0.00772			0.00818	0.00046	A	0.01000	04/14/1999	1642
MS	903804-5	ICPSPK99	0.53215		0.5000	0.00818	104.8	%	75-125	04/14/1999	1647
CCV		V170616C	1.96263		2.00		98.1	%	90-110	04/14/1999	1709
CCB			-0.00148							04/14/1999	1714
CCV		V170616C	1.94490		2.00		97.2	%	90-110	04/14/1999	1746
CCB			0.00243							04/14/1999	1750
ISB		V170616D	0.98268		1.00		98.3	%	80-120	04/14/1999	1827
CCV		V170616C	2.02092		2.00		101.0	%	90-110	04/14/1999	1833
CCB			-0.00145							04/14/1999	1838

* %=% REC, R=RPD, A=ABS Diff., D=% Diff.

CORE LABORATORIES

QUALITY CONTROL RESULTS

Job Number.: 903675

Report Date.: 04/23/99

CUSTOMER: Marathon Oil Company PROJECT: Marathon Oil Co., Midland, Tx ATTN: Mr. Paul Peacock

QC Type	Description	Reag. Code	Lab ID	Dilution Factor	Date	Time

Test Method.....: EPA 8310 Batch.....: 38632 Analyst...: rm
Method Description.: Polynuclear Aromatic Hydrocarbons-HPLC Units.....: ug/L

MB	Method Blank				04/15/1999	1533

Parameter/Test Description	QC Result	QC Result	True Value	Orig. Value	Calc. Result	*	Limits
Acenaphthene	ND						
Acenaphthylene	ND						
Anthracene	ND						
Benzo(b)fluoranthene	ND						
Benzo(k)fluoranthene	ND						
Benzo(a)anthracene	ND						
Benzo(a)pyrene	ND						
Benzo(ghi)perylene	ND						
Chrysene	ND						
Dibenzo(a,h)anthracene	ND						
Fluoranthene	ND						
Fluorene	ND						
Indeno(1,2,3-cd)pyrene	ND						
Naphthalene	ND						
Phenanthrene	ND						
Pyrene	ND						

LCS	Laboratory Control Sample	V173712A			04/15/1999	1611

Parameter/Test Description	QC Result	QC Result	True Value	Orig. Value	Calc. Result	*	Limits
Acenaphthene	302.8		1000.000000		30.3	%	20-150
Acenaphthylene	513.56		1000.000000		51.4	%	20-150
Anthracene	517.9		1002.000000		51.7	%	20-150
Benzo(b)fluoranthene	380.7		500.000000		76.1	%	20-150
Benzo(k)fluoranthene	400.3		500.000000		80.1	%	20-150
Benzo(a)anthracene	406.3		500.000000		81.3	%	20-150
Benzo(a)pyrene	341.0		500.000000		68.2	%	20-150
Benzo(ghi)perylene	407.7		500.000000		81.5	%	20-150
Chrysene	421.7		500.000000		84.3	%	20-150
Dibenzo(a,h)anthracene	415.9		500.000000		83.2	%	20-150
Fluoranthene	398.3		500.000000		79.7	%	20-150
Fluorene	385.1		1000.000000		38.5	%	20-150
Indeno(1,2,3-cd)pyrene	374.9		500.000000		75.0	%	20-150
Naphthalene	349.4		1000.000000		34.9	%	20-150
Phenanthrene	288.2		502.500000		57.4	%	20-150
Pyrene	388.6		500.000000		77.7	%	20-150

MS	Matrix Spike	V173712A	903663-1		04/15/1999	1725

Parameter/Test Description	QC Result	QC Result	True Value	Orig. Value	Calc. Result	*	Limits
Acenaphthene	209.4		1000.000000	ND	20.9	%	20-150
Acenaphthylene	327.54		1000.000000	ND	32.8	%	20-150
Anthracene	449.4		1002.000000	ND	44.9	%	20-150
Benzo(b)fluoranthene	353.0		500.000000	ND	70.6	%	20-150
Benzo(k)fluoranthene	376.7		500.000000	5.3	74.3	%	20-150
Benzo(a)anthracene	373.4		500.000000	23.5	70.0	%	20-150

* %=% REC, R=RPD, A=ABS Diff., D=% Diff.

CORE LABORATORIES

QUALITY CONTROL RESULTS

Job Number.: 903675 Report Date.: 04/23/99

CUSTOMER: Marathon Oil Company PROJECT: Marathon Oil Co., Midland, Tx ATTN: Mr. Paul Peacock

QC Type	Description	Reag. Code	Lab ID	Dilution Factor	Date Time
MS	Matrix Spike	V173712A	903663-1		04/15/1999 1725

Parameter/Test Description	QC Result	QC Result	True Value	Orig. Value	Calc. Result	*	Limits
Benzo(a)pyrene	376.8		500.000000	21.4	71.1	%	20-150
Benzo(ghi)perylene	385.6		500.000000	20.2	73.1	%	20-150
Chrysene	390.7		500.000000	17.6	74.6	%	20-150
Dibenzo(a,h)anthracene	388.5		500.000000	ND	77.7	%	20-150
Fluoranthene	348.6		500.000000	ND	69.7	%	20-150
Fluorene	279.2		1000.000000	ND	27.9	%	20-150
Indeno(1,2,3-cd)pyrene	340.4		500.000000	ND	68.1	%	20-150
Naphthalene	172.8		1000.000000	ND	17.3	%	20-150
Phenanthrene	241.1		502.500000	ND	48.0	%	20-150
Pyrene	353.4		500.000000	26.8	65.3	%	20-150

MSD	Matrix Spike Duplicate	V173712A	903663-1		04/15/1999 1803

Parameter/Test Description	QC Result	QC Result	True Value	Orig. Value	Calc. Result	*	Limits
Acenaphthene	259.5	209.4	1000.000000	ND	25.9	%	20-150
					21.4	R	30
Acenaphthylene	335.12	327.54	1000.000000	ND	33.5	%	20-150
					2.3	R	30
Anthracene	630.2	449.4	1002.000000	ND	62.9	%	20-150
					33.5	R	30
Benzo(b)fluoranthene	406.3	353.0	500.000000	ND	81.3	%	20-150
					14.0	R	30
Benzo(k)fluoranthene	435.7	376.7	500.000000	5.3	86.1	%	20-150
					14.5	R	30
Benzo(a)anthracene	448.3	373.4	500.000000	23.5	85.0	%	20-150
					18.2	R	30
Benzo(a)pyrene	457.8	376.8	500.000000	21.4	87.3	%	20-150
					19.4	R	30
Benzo(ghi)perylene	462.8	385.6	500.000000	20.2	88.5	%	20-150
					18.2	R	30
Chrysene	471.1	390.7	500.000000	17.6	90.7	%	20-150
					18.7	R	30
Dibenzo(a,h)anthracene	453.3	388.5	500.000000	ND	90.7	%	20-150
					15.4	R	30
Fluoranthene	336.2	348.6	500.000000	ND	67.2	%	20-150
					3.6	R	30
Fluorene	430.0	279.2	1000.000000	ND	43.0	%	20-150
					42.5	R	30
Indeno(1,2,3-cd)pyrene	449.1	340.4	500.000000	ND	89.8	%	20-150
					27.5	R	30
Naphthalene	214.2	172.8	1000.000000	ND	21.4	%	20-150
					21.4	R	30
Phenanthrene	320.7	241.1	502.500000	ND	63.8	%	20-150
					28.3	R	30
Pyrene	446.3	353.4	500.000000	26.8	83.9	%	20-150
					23.2	R	30

* %=% REC, R=RPD, A=ABS Diff., D=% Diff.

CORE LABORATORIES

QUALITY CONTROL RESULTS

Job Number.: 903675 Report Date.: 04/23/99

CUSTOMER: Marathon Oil Company PROJECT: Marathon Oil Co., Midland, Tx ATTN: Mr. Paul Peacock

QC Type	Description	Reag. Code	Lab ID	Dilution Factor	Date	Time

Test Method.....: EPA 8260B Batch.....: 38203 Analyst...: weh
Method Description.: Volatile Organic Compounds Units.....: ug/L

MB	Method Blank				04/13/1999	0924

Parameter/Test Description	QC Result	QC Result	True Value	Orig. Value	Calc. Result	*	Limits
Benzene	ND						
Ethylbenzene	ND						
Toluene	ND						
Xylenes (total)	ND						

LCS	Laboratory Control Sample	CLPVOAMS2			04/13/1999	0955

Parameter/Test Description	QC Result	QC Result	True Value	Orig. Value	Calc. Result	*	Limits
Benzene	52.06		50		104.1	%	67-130
Toluene	52.21		50		104.4	%	75-114

MS	Matrix Spike	CLPVOAMS2	903709-5		04/13/1999	1231

Parameter/Test Description	QC Result	QC Result	True Value	Orig. Value	Calc. Result	*	Limits
Benzene	52.05		50	ND	104.1	%	67-130
Toluene	51.97		50	ND	103.9	%	75-114

MSD	Matrix Spike Duplicate	CLPVOAMS2	903709-5		04/13/1999	1302

Parameter/Test Description	QC Result	QC Result	True Value	Orig. Value	Calc. Result	*	Limits
Benzene	52.10	52.05	50	ND	104.2	%	67-130
					0.1	R	30
Toluene	52.06	51.97	50	ND	104.1	%	75-114
					0.2	R	30

Test Method.....: EPA 8260B Batch.....: 38293 Analyst...: weh
Method Description.: Volatile Organic Compounds Units.....: ug/L

MB	Method Blank				04/14/1999	0912

Parameter/Test Description	QC Result	QC Result	True Value	Orig. Value	Calc. Result	*	Limits
Benzene	ND						
Ethylbenzene	ND						
Toluene	ND						
Xylenes (total)	ND						

* %=% REC, R=RPD, A=ABS Diff., D=% Diff.

CORE LABORATORIES

QUALITY CONTROL RESULTS

Job Number.: 903675

Report Date.: 04/23/99

CUSTOMER: Marathon Oil Company PROJECT: Marathon Oil Co., Midland, Tx ATTN: Mr. Paul Peacock

QC Type	Description	Reag. Code	Lab ID	Dilution Factor	Date	Time
LCS	Laboratory Control Sample	CLPVOAMS2			04/14/1999	1046

Parameter/Test Description	QC Result	QC Result	True Value	Orig. Value	Calc. Result	*	Limits
Benzene	51.49		50		103.0	%	67-130
Toluene	51.18		50		102.4	%	75-114

QC Type	Description	Reag. Code	Lab ID	Dilution Factor	Date	Time
MS	Matrix Spike	CLPVOAMS2	903776-2		04/14/1999	1219

Parameter/Test Description	QC Result	QC Result	True Value	Orig. Value	Calc. Result	*	Limits
Benzene	50.24		50	ND	100.5	%	67-130
Toluene	49.71		50	ND	99.4	%	75-114

QC Type	Description	Reag. Code	Lab ID	Dilution Factor	Date	Time
MSD	Matrix Spike Duplicate	CLPVOAMS2	903776-2		04/14/1999	1250

Parameter/Test Description	QC Result	QC Result	True Value	Orig. Value	Calc. Result	*	Limits
Benzene	49.67	50.24	50	ND	99.3	%	67-130
					1.1	R	30
Toluene	49.66	49.71	50	ND	99.3	%	75-114
					0.1	R	30

Test Method.....: EPA 8260B
Method Description.: Volatile Organic Compounds
Batch.....: 38382
Units.....: ug/L
Analyst...: weh

QC Type	Description	Reag. Code	Lab ID	Dilution Factor	Date	Time
MB	Method Blank				04/15/1999	1222

Parameter/Test Description	QC Result	QC Result	True Value	Orig. Value	Calc. Result	*	Limits
Benzene	ND						
Ethylbenzene	ND						
Toluene	ND						
Xylenes (total)	ND						

QC Type	Description	Reag. Code	Lab ID	Dilution Factor	Date	Time
LCS	Laboratory Control Sample	CLPVOAMS2			04/15/1999	1254

Parameter/Test Description	QC Result	QC Result	True Value	Orig. Value	Calc. Result	*	Limits
Benzene	50.54		50		101.1	%	67-130
Toluene	50.19		50		100.4	%	75-114

QC Type	Description	Reag. Code	Lab ID	Dilution Factor	Date	Time
MS	Matrix Spike	CLPVOAMS2	903713-1	10	04/15/1999	1849

Parameter/Test Description	QC Result	QC Result	True Value	Orig. Value	Calc. Result	*	Limits
Benzene	51.06		50	ND	102.1	%	67-130
Toluene	50.31		50	ND	100.6	%	75-114

* %=% REC, R=RPD, A=ABS Diff., D=% Diff.

CORE LABORATORIES

QUALITY CONTROL RESULTS

Job Number.: 903675

Report Date.: 04/23/99

CUSTOMER: Marathon Oil Company PROJECT: Marathon Oil Co., Midland, Tx ATTN: Mr. Paul Peacock

QC Type	Description	Reag. Code	Lab ID	Dilution Factor	Date	Time
MSD	Matrix Spike Duplicate	CLPVOAMS2	903713-1	10	04/15/1999	1920

Parameter/Test Description	QC Result	QC Result	True Value	Orig. Value	Calc. Result	*	Limits
Benzene	50.73	51.06	50	ND	101.5	%	67-130
					0.6	R	30
Toluene	50.25	50.31	50	ND	100.5	%	75-114
					0.1	R	30

Test Method.....: EPA 8260B
Method Description.: Volatile Organic Compounds
Batch.....: 38463
Units.....: ug/L
Analyst...: weh

MB	Method Blank				04/16/1999	0944

Parameter/Test Description	QC Result	QC Result	True Value	Orig. Value	Calc. Result	*	Limits
Benzene	ND						
Ethylbenzene	ND						
Toluene	ND						
Xylenes (total)	ND						

LCS	Laboratory Control Sample	CLPVOAMS2			04/16/1999	1015

Parameter/Test Description	QC Result	QC Result	True Value	Orig. Value	Calc. Result	*	Limits
Benzene	50.85		50		101.7	%	67-130
Toluene	49.99		50		100.0	%	75-114

MS	Matrix Spike	CLPVOAMS2	902990-2	10	04/16/1999	1322

Parameter/Test Description	QC Result	QC Result	True Value	Orig. Value	Calc. Result	*	Limits
Benzene	50.89		50	ND	101.8	%	67-130
Toluene	50.05		50	ND	100.1	%	75-114

MSD	Matrix Spike Duplicate	CLPVOAMS2	902990-2	10	04/16/1999	1353

Parameter/Test Description	QC Result	QC Result	True Value	Orig. Value	Calc. Result	*	Limits
Benzene	50.82	50.89	50	ND	101.6	%	67-130
					0.1	R	30
Toluene	49.78	50.05	50	ND	99.6	%	75-114
					0.5	R	30

* %=% REC, R=RPD, A=ABS Diff., D=% Diff.

CORE LABORATORIES

S U R R O G A T E R E C O V E R I E S R E P O R T

Job Number.: 903675

Report Date.: 04/23/99

CUSTOMER: Marathon Oil Company PROJECT: Marathon Oil Co., Midland, Tx ATTN: Mr. Paul Peacock

Method.....: Volatile Organic Compounds
Method Code.....: 8260V1

Batch.....: 38203
Analyst.....: weh

Surrogate	Units
1,2-Dichloroethane-d4 (surrogate)	ug/L

Lab ID	Matrix	QC Type	Dilution	Result	True Value	Percent Recovery	Limits	Flag	Date	Time
		MB		50.52	50.00	101.0	76-120		04/13/1999	0924
		LCS		49.91	50.00	99.8	76-120		04/13/1999	0955
903668-1			200	50.88	50.00	101.8	76-120		04/13/1999	1026
903679-1			200	49.85	50.00	99.7	76-120		04/13/1999	1058
903709-6				49.93	50.00	99.9	76-120		04/13/1999	1129
903709-5				50.16	50.00	100.3	76-120		04/13/1999	1200
903709-5		MS		49.22	50.00	98.4	76-120		04/13/1999	1231
903709-5		MSD		50.01	50.00	100.0	76-120		04/13/1999	1302
903727-1			200	50.71	50.00	101.4	76-120		04/13/1999	1333
903675-2				50.62	50.00	101.2	76-120		04/13/1999	1928
903675-3				49.59	50.00	99.2	76-120		04/13/1999	1959

Surrogate	Units
BFB (Surrogate)	ug/L

Lab ID	Matrix	QC Type	Dilution	Result	True Value	Percent Recovery	Limits	Flag	Date	Time
		MB		51.26	50.00	102.5	85-115		04/13/1999	0924
		LCS		50.35	50.00	100.7	85-115		04/13/1999	0955
903668-1			200	50.59	50.00	101.2	85-115		04/13/1999	1026
903679-1			200	50.36	50.00	100.7	85-115		04/13/1999	1058
903709-6				49.87	50.00	99.7	85-115		04/13/1999	1129
903709-5				50.05	50.00	100.1	85-115		04/13/1999	1200
903709-5		MS		50.33	50.00	100.7	85-115		04/13/1999	1231
903709-5		MSD		49.92	50.00	99.8	85-115		04/13/1999	1302
903727-1			200	49.86	50.00	99.7	85-115		04/13/1999	1333
903675-2				50.58	50.00	101.2	85-115		04/13/1999	1928
903675-3				49.67	50.00	99.3	85-115		04/13/1999	1959

Surrogate	Units
Toluene-d8	ug/L

Lab ID	Matrix	QC Type	Dilution	Result	True Value	Percent Recovery	Limits	Flag	Date	Time
		MB		51.06	50.00	102.1	85-112		04/13/1999	0924
		LCS		51.20	50.00	102.4	85-112		04/13/1999	0955
903668-1			200	51.17	50.00	102.3	85-112		04/13/1999	1026
903679-1			200	50.59	50.00	101.2	85-112		04/13/1999	1058
903709-6				50.68	50.00	101.4	85-112		04/13/1999	1129
903709-5				50.89	50.00	101.8	85-112		04/13/1999	1200
903709-5		MS		50.22	50.00	100.4	85-112		04/13/1999	1231
903709-5		MSD		50.16	50.00	100.3	85-112		04/13/1999	1302

CORE LABORATORIES

SURROGATE RECOVERIES REPORT

Job Number.: 903675 Report Date.: 04/23/99

CUSTOMER: Marathon Oil Company PROJECT: Marathon Oil Co., Midland, Tx ATTN: Mr. Paul Peacock

Surrogate	Units
Toluene-d8	ug/L

Lab ID	Matrix	QC Type	Dilution	Result	True Value	Percent Recovery	Limits	Flag	Date	Time
903727-1			200	50.72	50.00	101.4	85-112		04/13/1999	1333
903675-2				49.82	50.00	99.6	85-112		04/13/1999	1928
903675-3				49.79	50.00	99.6	85-112		04/13/1999	1959

Method.....: Volatile Organic Compounds Batch.....: 38293
Method Code.....: 8260V1 Analyst.....: weh

Surrogate	Units
1,2-Dichloroethane-d4 (surrogate)	ug/L

Lab ID	Matrix	QC Type	Dilution	Result	True Value	Percent Recovery	Limits	Flag	Date	Time
		MB		48.75	50.00	97.5	76-120		04/14/1999	0912
903224-1				49.71	50.00	99.4	76-120		04/14/1999	0943
903224-2				50.19	50.00	100.4	76-120		04/14/1999	1015
		LCS		50.16	50.00	100.3	76-120		04/14/1999	1046
903776-2				50.37	50.00	100.7	76-120		04/14/1999	1117
903776-1				50.21	50.00	100.4	76-120		04/14/1999	1148
903776-2		MS		49.43	50.00	98.9	76-120		04/14/1999	1219
903776-2		MSD		50.35	50.00	100.7	76-120		04/14/1999	1250
903774-1			200	49.57	50.00	99.1	76-120		04/14/1999	1321
903675-5				49.75	50.00	99.5	76-120		04/14/1999	1352
903831-2			5	49.33	50.00	98.7	76-120		04/14/1999	1548
903840-1			5	50.35	50.00	100.7	76-120		04/14/1999	1619

Surrogate	Units
BFB (Surrogate)	ug/L

Lab ID	Matrix	QC Type	Dilution	Result	True Value	Percent Recovery	Limits	Flag	Date	Time
		MB		52.18	50.00	104.4	85-115		04/14/1999	0912
903224-1				49.87	50.00	99.7	85-115		04/14/1999	0943
903224-2				49.43	50.00	98.9	85-115		04/14/1999	1015
		LCS		49.04	50.00	98.1	85-115		04/14/1999	1046
903776-2				50.15	50.00	100.3	85-115		04/14/1999	1117
903776-1				49.76	50.00	99.5	85-115		04/14/1999	1148
903776-2		MS		50.18	50.00	100.4	85-115		04/14/1999	1219
903776-2		MSD		49.95	50.00	99.9	85-115		04/14/1999	1250
903774-1			200	50.66	50.00	101.3	85-115		04/14/1999	1321
903675-5				50.21	50.00	100.4	85-115		04/14/1999	1352
903831-2			5	49.83	50.00	99.7	85-115		04/14/1999	1548
903840-1			5	51.80	50.00	103.6	85-115		04/14/1999	1619

CORE LABORATORIES

SURROGATE RECOVERIES REPORT

Job Number.: 903675 Report Date.: 04/23/99

CUSTOMER: Marathon Oil Company PROJECT: Marathon Oil Co., Midland, Tx ATTN: Mr. Paul Peacock

Surrogate	Units
Toluene-d8	ug/L

Lab ID	Matrix	QC Type	Dilution	Result	True Value	Percent Recovery	Limits	Flag	Date	Time
		MB		50.69	50.00	101.4	85-112		04/14/1999	0912
903224-1				50.58	50.00	101.2	85-112		04/14/1999	0943
903224-2				50.67	50.00	101.3	85-112		04/14/1999	1015
		LCS		50.89	50.00	101.8	85-112		04/14/1999	1046
903776-2				49.73	50.00	99.5	85-112		04/14/1999	1117
903776-1				49.86	50.00	99.7	85-112		04/14/1999	1148
903776-2		MS		49.77	50.00	99.5	85-112		04/14/1999	1219
903776-2		MSD		49.54	50.00	99.1	85-112		04/14/1999	1250
903774-1			200	49.61	50.00	99.2	85-112		04/14/1999	1321
903675-5				50.30	50.00	100.6	85-112		04/14/1999	1352
903831-2			5	50.09	50.00	100.2	85-112		04/14/1999	1548
903840-1			5	50.96	50.00	101.9	85-112		04/14/1999	1619

Method.....: Volatile Organic Compounds Batch.....: 38382
Method Code.....: 8260V1 Analyst.....: weh

Surrogate	Units
1,2-Dichloroethane-d4 (surrogate)	ug/L

Lab ID	Matrix	QC Type	Dilution	Result	True Value	Percent Recovery	Limits	Flag	Date	Time
		MB		50.00	50.00	100.0	76-120		04/15/1999	1222
		LCS		49.50	50.00	99.0	76-120		04/15/1999	1254
903835-1				50.26	50.00	100.5	76-120		04/15/1999	1325
903835-2				49.85	50.00	99.7	76-120		04/15/1999	1356
903675-4				48.60	50.00	97.2	76-120		04/15/1999	1427
903845-1			200	49.13	50.00	98.3	76-120		04/15/1999	1535
903713-1			10	48.35	50.00	96.7	76-120		04/15/1999	1818
903713-1		MS	10	49.47	50.00	98.9	76-120		04/15/1999	1849
903713-1		MSD	10	48.98	50.00	98.0	76-120		04/15/1999	1920

Surrogate	Units
BFB (Surrogate)	ug/L

Lab ID	Matrix	QC Type	Dilution	Result	True Value	Percent Recovery	Limits	Flag	Date	Time
		MB		51.88	50.00	103.8	85-115		04/15/1999	1222
		LCS		50.97	50.00	101.9	85-115		04/15/1999	1254
903835-1				50.36	50.00	100.7	85-115		04/15/1999	1325
903835-2				50.57	50.00	101.1	85-115		04/15/1999	1356
903675-4				50.45	50.00	100.9	85-115		04/15/1999	1427
903845-1			200	51.26	50.00	102.5	85-115		04/15/1999	1535
903713-1			10	49.34	50.00	98.7	85-115		04/15/1999	1818
903713-1		MS	10	49.47	50.00	98.9	85-115		04/15/1999	1849
903713-1		MSD	10	49.67	50.00	99.3	85-115		04/15/1999	1920

CORE LABORATORIES

SURROGATE RECOVERIES REPORT

Job Number.: 903675 Report Date.: 04/23/99

CUSTOMER: Marathon Oil Company PROJECT: Marathon Oil Co., Midland, Tx ATTN: Mr. Paul Peacock

Surrogate	Units
Toluene-d8	ug/L

Lab ID	Matrix	QC Type	Dilution	Result	True Value	Percent Recovery	Limits	Flag	Date	Time
		MB		51.19	50.00	102.4	85-112		04/15/1999	1222
		LCS		51.66	50.00	103.3	85-112		04/15/1999	1254
903835-1				51.49	50.00	103.0	85-112		04/15/1999	1325
903835-2				51.20	50.00	102.4	85-112		04/15/1999	1356
903675-4				51.14	50.00	102.3	85-112		04/15/1999	1427
903845-1			200	50.45	50.00	100.9	85-112		04/15/1999	1535
903713-1			10	50.44	50.00	100.9	85-112		04/15/1999	1818
903713-1		MS	10	50.61	50.00	101.2	85-112		04/15/1999	1849
903713-1		MSD	10	50.59	50.00	101.2	85-112		04/15/1999	1920

Method.....: Volatile Organic Compounds Batch.....: 38463
Method Code.....: 826TCL Analyst.....: weh

Surrogate	Units
1,2-Dichloroethane-d4 (surrogate)	ug/L

Lab ID	Matrix	QC Type	Dilution	Result	True Value	Percent Recovery	Limits	Flag	Date	Time
		MB		49.81	50.00	99.6	76-120		04/16/1999	0944
		LCS		48.41	50.00	96.8	76-120		04/16/1999	1015
903911-1			200	48.17	50.00	96.3	76-120		04/16/1999	1117
903523-1			20	48.89	50.00	97.8	76-120		04/16/1999	1148
903523-2			25	49.61	50.00	99.2	76-120		04/16/1999	1219
902990-2			10	49.72	50.00	99.4	76-120		04/16/1999	1250
902990-2		MS	10	49.58	50.00	99.2	76-120		04/16/1999	1322
902990-2		MSD	10	49.32	50.00	98.6	76-120		04/16/1999	1353
903675-1				49.28	50.00	98.6	76-120		04/16/1999	1425
903946-6				48.72	50.00	97.4	76-120		04/16/1999	1659
903946-5				48.89	50.00	97.8	76-120		04/16/1999	1730
903945-1			200	48.99	50.00	98.0	76-120		04/16/1999	1801

Surrogate	Units
BFB (Surrogate)	ug/L

Lab ID	Matrix	QC Type	Dilution	Result	True Value	Percent Recovery	Limits	Flag	Date	Time
		MB		51.48	50.00	103.0	85-115		04/16/1999	0944
		LCS		52.05	50.00	104.1	85-115		04/16/1999	1015
903911-1			200	51.00	50.00	102.0	85-115		04/16/1999	1117
903523-1			20	51.36	50.00	102.7	85-115		04/16/1999	1148
903523-2			25	51.13	50.00	102.3	85-115		04/16/1999	1219
902990-2			10	50.72	50.00	101.4	85-115		04/16/1999	1250
902990-2		MS	10	50.42	50.00	100.8	85-115		04/16/1999	1322
902990-2		MSD	10	50.78	50.00	101.6	85-115		04/16/1999	1353
903675-1				51.95	50.00	103.9	85-115		04/16/1999	1425

CORE LABORATORIES

SURROGATE RECOVERIES REPORT

Job Number.: 903675 Report Date.: 04/23/99

CUSTOMER: Marathon Oil Company PROJECT: Marathon Oil Co., Midland, Tx ATTN: Mr. Paul Peacock

Surrogate	Units
BFB (Surrogate)	ug/L

Lab ID	Matrix	QC Type	Dilution	Result	True Value	Percent Recovery	Limits	Flag	Date	Time
903946-6				51.11	50.00	102.2	85-115		04/16/1999	1659
903946-5				51.20	50.00	102.4	85-115		04/16/1999	1730
903945-1			200	52.57	50.00	105.1	85-115		04/16/1999	1801

Surrogate	Units
Toluene-d8	ug/L

Lab ID	Matrix	QC Type	Dilution	Result	True Value	Percent Recovery	Limits	Flag	Date	Time
		MB		51.14	50.00	102.3	85-112		04/16/1999	0944
		LCS		50.30	50.00	100.6	85-112		04/16/1999	1015
903911-1			200	50.51	50.00	101.0	85-112		04/16/1999	1117
903523-1			20	50.82	50.00	101.6	85-112		04/16/1999	1148
903523-2			25	50.62	50.00	101.2	85-112		04/16/1999	1219
902990-2			10	50.56	50.00	101.1	85-112		04/16/1999	1250
902990-2		MS	10	50.50	50.00	101.0	85-112		04/16/1999	1322
902990-2		MSD	10	50.79	50.00	101.6	85-112		04/16/1999	1353
903675-1				49.93	50.00	99.9	85-112		04/16/1999	1425
903946-6				50.38	50.00	100.8	85-112		04/16/1999	1659
903946-5				50.68	50.00	101.4	85-112		04/16/1999	1730
903945-1			200	50.62	50.00	101.2	85-112		04/16/1999	1801

Method.....: Polynuclear Aromatic Hydrocarbons-HPLC Batch.....: 38632
Method Code.....: 8310 Analyst.....: rm

Surrogate	Units
1-Fluoronaphthalene	ug/L

Lab ID	Matrix	QC Type	Dilution	Result	True Value	Percent Recovery	Limits	Flag	Date	Time
		MB		62.5	200	31	30-150		04/15/1999	1533
		LCS		74.3	200	37	30-150		04/15/1999	1611
903663-1				62.9	200	31	30-150		04/15/1999	1648
903663-2				63.3	200	32	30-150		04/15/1999	1840
903664-1				99.6	200	50	30-150		04/15/1999	1917
903690-3			150	1.03	200	77	30-150		04/15/1999	1953
903690-4			150	1.05	200	79	30-150		04/15/1999	2028
903675-1			15	14.4	200	108	30-150		04/15/1999	2104
903675-2				89.5	200	45	30-150		04/15/1999	2141
903675-3				73.9	200	37	30-150		04/15/1999	2219
903675-5				298.8	200	149	30-150		04/15/1999	2333

CORE LABORATORIES

SURROGATE RECOVERIES REPORT

Job Number.: 903675

Report Date.: 04/23/99

CUSTOMER: Marathon Oil Company

PROJECT: Marathon Oil Co., Midland, Tx

ATTN: Mr. Paul Peacock

Surrogate	Units
Terphenyl-d14	ug/L

Lab ID	Matrix	QC Type	Dilution	Result	True Value	Percent Recovery	Limits	Flag	Date	Time
		MB		161.6	200	81	30-150		04/15/1999	1533
		LCS		177.1	200	89	30-150		04/15/1999	1611
903663-1				236.8	200	118	30-150		04/15/1999	1648
903663-1		MS		182.2	200	91	30-150		04/15/1999	1725
903663-1		MSD		193.1	200	97	30-150		04/15/1999	1803
903663-2				176.5	200	88	30-150		04/15/1999	1840
903664-1				296.2	200	148	30-150		04/15/1999	1917
903675-2				161.4	200	81	30-150		04/15/1999	2141
903675-3				152.9	200	76	30-150		04/15/1999	2219
903675-4				266.3	200	133	30-150		04/15/1999	2256

CORE LABORATORIES

QUALITY ASSURANCE FOOTER

METHOD REFERENCES

(1) EPA SW-846, Test Methods for Evaluating Solid Waste, Third Edition, September 1986, July 1992, and September 1994 updates
(2) Standard Methods for the Examination of Water and Wastewater, 18th Edition, 1992
(3) EPA 600/4-79-020, Methods of Chemical Analysis for Waters and Wastes, March 1983
(4) Federal Register, Friday, October 26, 1984 (40 CFR Part 136)
(5) American Society for Testing and Materials, Volumes 5.01, 5.02, 5.03, 1992
(6) EPA 600/4-89-001, Short-term Methods for Estimating the Chronic Toxicity of Effluents and Receiving Waters to Fresh Water Organisms
(7) EPA 600/4-90-027, Methods for Measuring the Acute Toxicity of Effluent and Receiving Waters to Fresh Water and Marine Organisms, Fourth Edition

COMMENTS

All methods of chemical analysis have a statistical uncertainty associated with the results. Unless otherwise indicated, the data in this report are within the limits of uncertainty as specified in the referenced method. Quality control acceptance criteria are based either on actual laboratory performance or on limits specified in the referenced method. The date and time of analysis indicated on the QA report may not reflect the actual time of analysis for QC samples. All data reported on an "as received" basis unless otherwise indicated. Data reported in the QA report may be lower than sample data due to dilution of samples into the calibration range of the analysis. Sample concentrations for solid samples are calculated on an as received (wet) basis. Unless otherwise indicated, volatiles by gas chromatography (GC) are reported from a single column. Volatiles analyses by GC on low level soil extractions are conducted at room temperature.

FLAGS, FOOTNOTES, AND ABBREVIATIONS (as needed)

NA = Not analyzed
N/A = Not applicable
ug/L = Micrograms per liter
mg/L = Milligrams per liter
ND = Not detected at a value greater than the reporting limit
NC = Not calculable due to values lower than the detection limit
N.I. = Not Ignitable
S.I. = Sustains Ignition
I(NS) = Ignites, but does not Sustain Ignition
RPD = Relative Percent Difference
(a) = Surrogate recoveries were outside acceptable ranges due to matrix effects.
(b) = Surrogate recoveries were not calculated due to dilution of the sample below the detectable range for the surrogate.
(c) = Matrix spike recoveries were outside acceptable ranges due to matrix effects.
(d) = Relative Percent Difference (RPD) for duplicate analysis outside acceptance limits due to actual differences in the sample matrix.
(e) = The limit listed for flammability indicates the upper limit for the test. Samples are not tested at temperatures above 140 Fahrenheit since only samples which will sustain ignition at temperatures below 140 are considered flammable.
(f) = Results for this hydrocarbon range did not match a typical hydrocarbon pattern. Results were quantified using a diesel standard, however, the hydrocarbon pattern did not match a diesel pattern.
(g) = Results for this hydrocarbon range did not match a typical hydrocarbon pattern. Results were quantified using a gasoline standard, however, the hydrocarbon pattern did not match a gasoline pattern.
(h) = High dilution due to matrix effects

QC SAMPLE IDENTIFICATIONS

MB = Method Blank
RB = Reagent Blank
ICB = Initial Calibration Blank
CCB = Continuing Calibration Blank
CS = Calibration Standard
ICB = Initial Calibration Verification
CCV = Continuing Calibration Verification
SB = Storage Blank
MS = Matrix Spike
MSD = Matrix Spike Duplicate
MD = Matrix Duplicate
BS = Blank Spike
SS = Surrogate Spike
LCS = Laboratory Control Standard
RS = Reference Standard

SUBCONTRACTED LABORATORY LOCATIONS

Core Laboratories:	Aurora, Colorado	*AU
	Casper, Wyoming	*CA
	Corpus Christi, Texas	*CC
	Edison, New Jersey	*ED
	Houston, Texas (Env)	*HE
	Houston, Texas (Pet)	*HP
	Indianapolis, Indiana	*IN
	Lake Charles, Louisiana	*LC
	Long Beach, California	*LB
	Tampa, Florida	*TP
	Valparaiso, Indiana	*VP
Aquatic Testing Laboratories:	Ventura, California	*AT

2400 Cumberland Drive
Valparaiso, IN 46383

rpjsckl

Job Sample Receipt Checklist Report
04/10/99

V2

Job Number.....: 903675 Location.: 57211 Customer Job ID.....: Job Check List Date.: 04/10/99
Project Number.: 96000651 Project Description.: Marathon Oil Co., Midland, Tx Project Manager.....: lpa
Customer.....: Marathon Oil Company Contact.: Mr. Paul Peacock

Questions ?	(Y/N)	Comments
Chain-of-Custody Present?.....	Y	
Custody seal on shipping container?.....	N	
...If "yes", custody seal intact?.....		
Custody seals on sample containers?.....	N	
...If "yes", custody seal intact?.....		
Samples chilled?.....	Y	
Temperature of cooler acceptable? (4 deg C +/- 2).	N	13.2
Samples received intact (good condition)?.....	N	1 AMBER BOTTLE FOR SITE MW-3 BROKEN IN TRANSIT
Volatile samples acceptable? (no headspace).....	N	LARGE AIR BUBBLES IN SAMPLES MW-3 & MW-5
Correct containers used?.....	Y	
Adequate sample volume provided?.....	N	250 mL's FOR pH, TDS, CHLORIDE, FLUORIDE, & CYANIDE
Samples preserved correctly?.....	N	SAMPLES MW-1 & MW-4 HAD pH's OF 4 & 3 RESPECTIVELY FOR DIS METALS
Samples received within holding-time?.....	N	pH OUT OF HOLD
Agreement between COC and sample labels?.....	Y	
Additional.....		
Comments.....		

Sample Custodian Signature Allen D. McCarron

CORE LABORATORIES, INC.

CORELAB

CHAIN OF CUSTODY RECORD

LAB JOB NO. 903675

CUSTOMER INFORMATION	
COMPANY:	Marathon Oil Company
SEND REPORT TO:	Paul Peacock
ADDRESS:	P.O. Box 552
	Midland, TX 79702
PHONE:	915/687-8312
FAX:	915/687-8305

PROJECT INFORMATION	
PROJECT NAME/NUMBER:	Bertha Barber Tank Battery
BILLING INFORMATION	
BILL TO:	Same
ADDRESS:	↓
PHONE:	↓
FAX:	PO NO.:

SAMPLE NO.	SAMPLE DESCRIPTION	SAMPLE DATE	SAMPLE TIME	SAMPLE MATRIX	CONTAINER	PRESERV.	NUMBER OF CONTAINERS	PAH's	BTEX	Chloride, TDS, pH	Arsenic, Barium, Cadmium, Chromium	Lead, Selenium	Fluoride	Silver, Zinc	Iron, Manganese	Aluminum, Boron, Cobalt, Molybdenum	Nickel, Antimony, Beryllium, Boron	Copper, Magnesium	Calcium, Potassium	Sodium, Thallium, Vanadium	(Total Mercury)	REMARKS / PRECAUTIONS
MW-1	-1	4/8/99	11:45am	Water			6	X	X	X	X	X	X	X	X							Dissolved Metals
MW-2	-2	↓	1:00pm	↓			6	↓	↓	↓	↓	↓	↓	↓	↓							
MW-3	-3	↓	3:10pm	↓			6	↓	↓	↓	↓	↓	↓	↓	↓							
MW-4	-4	↓	3:40pm.	↓			6	↓	↓	↓	↓	↓	↓	↓	↓							
MW-5	-5	↓	2:00pm	↓			6	↓	↓	↓	↓	↓	↓	↓	↓							

SAMPLER: Paul Peacock + Pat Reynolds

SHIPMENT METHOD:

AIRBILL NO. 8471498840

REQUIRED TURNAROUND:* ☐ SAME DAY ☐ 24 HOURS ☐ 48 HOURS ☐ 72 HOURS ☐ 5 DAYS ☐ 10 DAYS ☒ ROUTINE OTHER

1. RELINQUISHED BY:	DATE	2. RELINQUISHED BY:	DATE	3. RELINQUISHED BY:	DATE
SIGNATURE: Pat Reynolds	4-5-99	SIGNATURE:		SIGNATURE:	
PRINTED NAME/COMPANY: Pat Reynolds Marathon Oil Co.	TIME 8:50AM	PRINTED NAME/COMPANY:	TIME	PRINTED NAME/COMPANY:	TIME
1. RECEIVED BY:	**DATE**	**2. RECEIVED BY:**	**DATE**	**3. RECEIVED BY:**	**DATE**
SIGNATURE: Alan H. McCarron	4-10-99	SIGNATURE:		SIGNATURE:	
PRINTED NAME/COMPANY: Alan H. McCarron/Core	TIME 11:30	PRINTED NAME/COMPANY:	TIME	PRINTED NAME/COMPANY:	TIME

* RUSH TURNAROUND MAY REQUIRE SURCHARGE

☐ **Anaheim, CA** 1250 E. Gene Autry Way Anaheim, CA 92805 (714) 937-1094 Fax (714) 937-1170

☐ **Aurora, CO** 10703 E. Bethany Drive Aurora, CO 80014 (303) 751-1780 Fax (303) 751-1784

☐ **Carson, CA** 21730 S. Wilmington Ave. - Suite 201 Carson, CA 90810-1640 (310) 513-2031 Fax (310) 513-2035

☐ **Casper, WY** 420 W. First Street Casper, WY 82601 (307) 235-5741 Fax (307) 266-1676

☐ **Corpus Christi, TX** 1733 N. Padre Island Drive Corpus Christi, TX 78408 (512) 289-2673 Fax (512) 289-2471

☐ **Edison, NJ** 284 Raritan Center Parkway Edison, NJ 08837 (732) 225-6700 Fax (732) 225-6777

☐ **Houston, TX (Env)** 6310 Rothway Drive Houston, TX 77040 (713) 690-4444 Fax (713) 690-5646

☐ **Houston, TX (Pet)** 8210 Mosley Road Houston, TX 77075 (713) 943-9776 Fax (713) 943-3846

☐ **Indianapolis, IN** 7726 Moller Road Indianapolis, IN 46268 (317) 875-5894 Fax (317) 872-6189

☐ **Lake Charles, LA** 3645 Beglis Parkway Sulphur, LA 70663 (318) 583-4926 Fax (318) 583-4929

☐ **Valparaiso, IN** 2400 Cumberland Drive Valparaiso, IN 46383 (219) 464-2389 Fax (219) 462-2953

ORIGINAL

July 1999 Monitoring Event

MCR

JUL 30 1999

CORE LABORATORIES

CASE NARRATIVE

Date: Tuesday, July 27, 1999
Core Laboratories Job Number: 907997
Client: Marathon Oil Company – Midland, Texas
Client Project Identification: Bertha Barber

On 07/20/99 Core Laboratories received five samples related to the above project. Aanlysis for Benzene, Toluene, Ethylbenzene, and Xylenes were requested on each sample.

During analysis of sample 907997-1 (MOC ID: MW1) it was noted that the purge step of the analysis produced excessive foaming in the purge vessel. This is not an uncommon occurrence in Volatile Organic analysis. The standard protocol requires dilution of the original sample until the foaming no longer interferes with the analysis. In the case of sample 907997-1, the sample required a 100 fold dilution, resulting in the elevated reporting limit.

Les Arnold
Laboratory Manager

CORE LABORATORIES

ANALYTICAL REPORT

JOB NUMBER: 907997

Prepared For:

Marathon Oil Company
125 West Missouri Street
P.O. Box 552
Midland, TX 79702-0552

Attention: Mr. Paul Peacock

Date: 07/27/99

Les Arnold
Signature

7/27/99
Date

Name: Les Arnold

Title: Laboratory Manager

2400 Cumberland Drive
Valparaiso, IN 46383

PHONE: 219-464-2389
FAX..: 219-462-2953

CORE LABORATORIES

SAMPLE INFORMATION
Date: 07/27/99

Job Number.: 907997
Customer...: Marathon Oil Company
Attn.....: Mr. Paul Peacock

Project Number.....: 96000703
Customer Project ID....: BERTHA BARBER
Project Description....: MOC - Midland Groundwater

Laboratory Sample ID	Customer Sample ID	Sample Matrix	Date Sampled	Time Sampled	Date Received	Time Received
907997-1	MW-1	Water	07/15/1999	13:00	07/20/1999	09:35
907997-2	MW-2	Water	07/15/1999	13:30	07/20/1999	09:35
907997-3	MW-3	Water	07/15/1999	14:00	07/20/1999	09:35
907997-4	MW-4	Water	07/15/1999	14:30	07/20/1999	09:35
907997-5	MW-5	Water	07/15/1999	15:00	07/20/1999	09:35

CORE LABORATORIES

LABORATORY TEST RESULTS

Job Number: 907997

Date: 07/27/99

CUSTOMER: Marathon Oil Company PROJECT: BERTHA BARBER ATTN: Mr. Paul Peacock

Customer Sample ID: MW-1
Date Sampled.....: 07/15/1999
Time Sampled.....: 13:00
Sample Matrix.....: Water

Laboratory Sample ID: 907997-1
Date Received.....: 07/20/1999
Time Received.....: 09:35

TEST METHOD	PARAMETER/TEST DESCRIPTION	SAMPLE RESULT	REPORTING LIMIT	UNITS	DATE	TECH
EPA 8260B	Volatile Organic Compounds					
	Benzene	ND	500	ug/L	07/22/99	rm
	Ethylbenzene	ND	500	ug/L	07/22/99	rm
	Toluene	ND	500	ug/L	07/22/99	rm
	Xylenes (total)	ND	1000	ug/L	07/22/99	rm

CORE LABORATORIES

LABORATORY TEST RESULTS

Job Number: 907997

Date: 07/27/99

CUSTOMER: Marathon Oil Company PROJECT: BERTHA BARBER ATTN: Mr. Paul Peacock

Customer Sample ID: MW-2
Date Sampled.....: 07/15/1999
Time Sampled.....: 13:30
Sample Matrix.....: Water

Laboratory Sample ID: 907997-2
Date Received.....: 07/20/1999
Time Received.....: 09:35

TEST METHOD	PARAMETER/TEST DESCRIPTION	SAMPLE RESULT	REPORTING LIMIT	UNITS	DATE	TECH
EPA 8260B	Volatile Organic Compounds					
	Benzene	<5	5	ug/L	07/22/99	weh
	Ethylbenzene	<5	5	ug/L	07/22/99	weh
	Toluene	ND	5	ug/L	07/22/99	weh
	Xylenes (total)	ND	10	ug/L	07/22/99	weh

CORE LABORATORIES

LABORATORY TEST RESULTS

Job Number: 907997

Date: 07/27/99

CUSTOMER: Marathon Oil Company PROJECT: BERTHA BARBER ATTN: Mr. Paul Peacock

Customer Sample ID: MW-3
Date Sampled.....: 07/15/1999
Time Sampled.....: 14:00
Sample Matrix.....: Water

Laboratory Sample ID: 907997-3
Date Received.....: 07/20/1999
Time Received.....: 09:35

TEST METHOD	PARAMETER/TEST DESCRIPTION	SAMPLE RESULT	REPORTING LIMIT	UNITS	DATE	TECH
EPA 8260B	Volatile Organic Compounds					
	Benzene	<5	5	ug/L	07/22/99	weh
	Ethylbenzene	ND	5	ug/L	07/22/99	weh
	Toluene	ND	5	ug/L	07/22/99	weh
	Xylenes (total)	ND	10	ug/L	07/22/99	weh

CORE LABORATORIES

LABORATORY TEST RESULTS

Job Number: 907997

Date: 07/27/99

CUSTOMER: Marathon Oil Company PROJECT: BERTHA BARBER ATTN: Mr. Paul Peacock

Customer Sample ID: MW-4
Date Sampled.....: 07/15/1999
Time Sampled.....: 14:30
Sample Matrix.....: Water

Laboratory Sample ID: 907997-4
Date Received.....: 07/20/1999
Time Received.....: 09:35

TEST METHOD	PARAMETER/TEST DESCRIPTION	SAMPLE RESULT	REPORTING LIMIT	UNITS	DATE	TECH
EPA 8260B	Volatile Organic Compounds					
	Benzene	43	5	ug/L	07/22/99	weh
	Ethylbenzene	28	5	ug/L	07/22/99	weh
	Toluene	<5	5	ug/L	07/22/99	weh
	Xylenes (total)	<10	10	ug/L	07/22/99	weh

CORE LABORATORIES

LABORATORY TEST RESULTS

Job Number: 907997

Date: 07/27/99

CUSTOMER: Marathon Oil Company PROJECT: BERTHA BARBER ATTN: Mr. Paul Peacock

Customer Sample ID: MW-5
Date Sampled.....: 07/15/1999
Time Sampled.....: 15:00
Sample Matrix.....: Water

Laboratory Sample ID: 907997-5
Date Received.....: 07/20/1999
Time Received.....: 09:35

TEST METHOD	PARAMETER/TEST DESCRIPTION	SAMPLE RESULT	REPORTING LIMIT	UNITS	DATE	TECH
EPA 8260B	Volatile Organic Compounds					
	Benzene	470	20	ug/L	07/23/99	rm
	Ethylbenzene	43	5	ug/L	07/22/99	weh
	Toluene	<5	5	ug/L	07/22/99	weh
	Xylenes (total)	10	10	ug/L	07/22/99	weh

CORE LABORATORIES

QUALITY CONTROL RESULTS

Job Number.: 907997 Report Date.: 07/27/99

CUSTOMER: Marathon Oil Company PROJECT: MOC - Midland Groundwater ATTN: Mr. Paul Peacock

QC Type	Description	Reag. Code	Lab ID	Dilution Factor	Date	Time

Test Method.....: EPA 8260B Batch.....: 43684 Analyst...: weh
Method Description.: Volatile Organic Compounds Units.....: ug/L

MB	Method Blank				07/22/1999	0928

Parameter/Test Description	QC Result	QC Result	True Value	Orig. Value	Calc. Result	*	Limits
1,2,4-Trichlorobenzene	ND						
1,4-Dichlorobenzene	ND						
Trichlorofluoromethane	ND						
m&p-Xylenes	ND						
tertiary Butyl Alcohol	ND						
Isopropylbenzene	ND						
o-Xylene	ND						
1,2,4-Trimethylbenzene	ND						
Acrolein	ND						
Dichlorodifluoromethane	ND						
Dibromomethane	ND						
Bromobenzene	ND						
1,2,3-Trichloropropane	ND						
1,1,1,2-Tetrachloroethane	ND						
tert-Butyl methyl ether (MTBE)	ND						
1,2-Dibromo-3-chloropropane	ND						
Acrylonitrile	ND						
1,2-Dibromoethane (EDB)	ND						
2-Chloroethylvinyl ether	ND						
1,2-Dichlorobenzene	ND						
1,3-Dichlorobenzene	ND						
Acetone	ND						
Benzene	ND						
Bromodichloromethane	ND						
Bromoform	ND						
Bromomethane	ND						
2-Butanone	ND						
Carbon disulfide	ND						
Carbon tetrachloride	ND						
Dibromochloromethane	ND						
Chlorobenzene	ND						
Chloroethane	ND						
Chloroform	ND						
Chloromethane	ND						
1,1-Dichloroethane	ND						
1,2-Dichloroethane	ND						
1,1-Dichloroethene	ND						
trans-1,2-Dichloroethene	ND						
cis-1,2-Dichloroethene	ND						
1,2-Dichloropropane	ND						
cis-1,3-Dichloropropene	ND						
trans-1,3-Dichloropropene	ND						
Ethylbenzene	ND						
2-Hexanone	ND						
Methylene chloride	ND						
4-Methyl-2-pentanone (MIBK)	ND						
Styrene	ND						
1,1,2,2-Tetrachloroethane	ND						
Tetrachloroethene	ND						
Toluene	ND						

* %=% REC, R=RPD, A=ABS Diff., D=% Diff.

CORE LABORATORIES

QUALITY CONTROL RESULTS

Job Number.: 907997

Report Date.: 07/27/99

CUSTOMER: Marathon Oil Company | PROJECT: MOC - Midland Groundwater | ATTN: Mr. Paul Peacock

QC Type	Description	Reag. Code	Lab ID	Dilution Factor	Date	Time
MB	Method Blank				07/22/1999	0928

Parameter/Test Description	QC Result	QC Result	True Value	Orig. Value	Calc. Result	*	Limits
1,1,1-Trichloroethane	ND						
1,1,2-Trichloroethane	ND						
Trichloroethene	ND						
Vinyl acetate	ND						
Vinyl chloride	ND						
Xylenes (total)	ND						

QC Type	Description	Reag. Code	Lab ID	Dilution Factor	Date	Time
LCS	Laboratory Control Sample	CLPVOAMS2			07/22/1999	0959

Parameter/Test Description	QC Result	QC Result	True Value	Orig. Value	Calc. Result	*	Limits
Benzene	45.99		50		92.0	%	67-130
Chlorobenzene	47.76		50		95.5	%	74-116
1,1-Dichloroethene	41.16		50		82.3	%	51-141
Toluene	47.23		50		94.5	%	75-114
Trichloroethene	46.68		50		93.4	%	72-114

QC Type	Description	Reag. Code	Lab ID	Dilution Factor	Date	Time
MS	Matrix Spike	CLPVOAMS2	907961-1	10	07/22/1999	1133

Parameter/Test Description	QC Result	QC Result	True Value	Orig. Value	Calc. Result	*	Limits
Benzene	47.09		50	ND	94.2	%	67-130
Chlorobenzene	47.02		50	ND	94.0	%	74-116
1,1-Dichloroethene	40.27		50	ND	80.5	%	51-141
Toluene	47.09		50	ND	94.2	%	75-114
Trichloroethene	45.79		50	ND	91.6	%	72-114

QC Type	Description	Reag. Code	Lab ID	Dilution Factor	Date	Time
MSD	Matrix Spike Duplicate	CLPVOAMS2	907961-1	10	07/22/1999	1204

Parameter/Test Description	QC Result	QC Result	True Value	Orig. Value	Calc. Result	*	Limits
Benzene	46.55	47.09	50	ND	93.1	%	67-130
					1.2	R	30
Chlorobenzene	47.64	47.02	50	ND	95.3	%	74-116
					1.3	R	30
1,1-Dichloroethene	40.57	40.27	50	ND	81.1	%	51-141
					0.7	R	30
Toluene	47.08	47.09	50	ND	94.2	%	75-114
					0.0	R	30
Trichloroethene	46.23	45.79	50	ND	92.5	%	72-114
					1.0	R	30

* %=% REC, R=RPD, A=ABS Diff., D=% Diff.

CORE LABORATORIES

QUALITY CONTROL RESULTS

Job Number.: 907997

Report Date.: 07/27/99

CUSTOMER: Marathon Oil Company | PROJECT: MOC - Midland Groundwater | ATTN: Mr. Paul Peacock

QC Type	Description	Reag. Code	Lab ID	Dilution Factor	Date	Time

Test Method.....: EPA 8260B
Method Description.: Volatile Organic Compounds

Batch.....: 43697
Units.....: ug/L

Analyst...: rm

MB	Method Blank				07/22/1999	1428

Parameter/Test Description	QC Result	QC Result	True Value	Orig. Value	Calc. Result	*	Limits
1,2,4-Trichlorobenzene	ND						
Acrolein	ND						
tert-Butyl methyl ether (MTBE)	ND						
1,1,1,2-Tetrachloroethane	ND						
2-Chloroethylvinyl ether	ND						
1,3-Dichlorobenzene	ND						
m&p-Xylenes	ND						
Trichlorofluoromethane	ND						
Acrylonitrile	ND						
Bromobenzene	ND						
o-Xylene	ND						
1,2,4-Trimethylbenzene	ND						
Isopropylbenzene	ND						
1,2,3-Trichloropropane	ND						
1,4-Dichlorobenzene	ND						
Dibromomethane	ND						
Dichlorodifluoromethane	ND						
1,2-Dibromo-3-chloropropane	ND						
1,2-Dibromoethane (EDB)	ND						
1,2-Dichlorobenzene	ND						
Acetone	ND						
Benzene	ND						
Bromodichloromethane	ND						
Bromoform	ND						
Bromomethane	ND						
2-Butanone	ND						
Carbon disulfide	ND						
Carbon tetrachloride	ND						
Dibromochloromethane	ND						
Chlorobenzene	ND						
Chloroethane	ND						
Chloroform	ND						
Chloromethane	ND						
1,1-Dichloroethane	ND						
1,2-Dichloroethane	ND						
1,1-Dichloroethene	ND						
trans-1,2-Dichloroethene	ND						
cis-1,2-Dichloroethene	ND						
1,2-Dichloropropane	ND						
cis-1,3-Dichloropropene	ND						
trans-1,3-Dichloropropene	ND						
Ethylbenzene	ND						
2-Hexanone	ND						
Methylene chloride	ND						
4-Methyl-2-pentanone (MIBK)	ND						
Styrene	ND						
1,1,2,2-Tetrachloroethane	ND						
Tetrachloroethene	ND						
Toluene	ND						
1,1,1-Trichloroethane	ND						

* %=% REC, R=RPD, A=ABS Diff., D=% Diff.

CORE LABORATORIES

QUALITY CONTROL RESULTS

Job Number.: 907997

Report Date.: 07/27/99

CUSTOMER: Marathon Oil Company | PROJECT: MOC - Midland Groundwater | ATTN: Mr. Paul Peacock

QC Type	Description	Reag. Code	Lab ID	Dilution Factor	Date	Time
MB	Method Blank				07/22/1999	1428

Parameter/Test Description	QC Result	QC Result	True Value	Orig. Value	Calc. Result	*	Limits
1,1,2-Trichloroethane	ND						
Trichloroethene	ND						
Vinyl acetate	ND						
Vinyl chloride	ND						
Xylenes (total)	ND						

LCS	Laboratory Control Sample	CLPVOAMS2			07/22/1999	1507

Parameter/Test Description	QC Result	QC Result	True Value	Orig. Value	Calc. Result	*	Limits
Benzene	50.59		50		101.2	%	67-130
Chlorobenzene	53.32		50		106.6	%	74-116
1,1-Dichloroethene	43.32		50		86.6	%	51-141
Toluene	53.29		50		106.6	%	75-114
Trichloroethene	52.94		50		105.9	%	72-114

MS	Matrix Spike	CLPVOAMS2	907997-1	100	07/22/1999	1612

Parameter/Test Description	QC Result	QC Result	True Value	Orig. Value	Calc. Result	*	Limits
Benzene	51.27		50	ND	102.5	%	67-130
Chlorobenzene	52.98		50	ND	106.0	%	74-116
1,1-Dichloroethene	42.79		50	ND	85.6	%	51-141
Toluene	54.50		50	ND	109.0	%	75-114
Trichloroethene	54.65		50	ND	109.3	%	72-114

MSD	Matrix Spike Duplicate	CLPVOAMS2	907997-1	100	07/22/1999	1645

Parameter/Test Description	QC Result	QC Result	True Value	Orig. Value	Calc. Result	*	Limits
Benzene	50.77	51.27	50	ND	101.5	%	67-130
					1.0	R	30
Chlorobenzene	51.31	52.98	50	ND	102.6	%	74-116
					3.2	R	30
1,1-Dichloroethene	41.70	42.79	50	ND	83.4	%	51-141
					2.6	R	30
Toluene	54.07	54.50	50	ND	108.1	%	75-114
					0.8	R	30
Trichloroethene	52.26	54.65	50	ND	104.5	%	72-114
					4.5	R	30

* %=% REC, R=RPD, A=ABS Diff., D=% Diff.

CORE LABORATORIES

QUALITY CONTROL RESULTS

Job Number.: 907997

Report Date.: 07/27/99

CUSTOMER: Marathon Oil Company PROJECT: MOC - Midland Groundwater ATTN: Mr. Paul Peacock

QC Type	Description	Reag. Code	Lab ID	Dilution Factor	Date	Time

Test Method.....: EPA 8260B
Method Description.: Volatile Organic Compounds
Batch.....: 43784
Units.....: ug/L
Analyst...: rm

MB	Method Blank				07/23/1999	1107

Parameter/Test Description	QC Result	QC Result	True Value	Orig. Value	Calc. Result	*	Limits
Acrylonitrile	ND						
m&p-Xylenes	ND						
o-Xylene	ND						
tert-Butyl methyl ether (MTBE)	ND						
1,1,1,2-Tetrachloroethane	ND						
1,2,3-Trichloropropane	ND						
Bromobenzene	ND						
Trichlorofluoromethane	ND						
2-Chloroethylvinyl ether	ND						
Dibromomethane	ND						
1,2-Dibromo-3-chloropropane	ND						
1,2-Dibromoethane (EDB)	ND						
1,2-Dichlorobenzene	ND						
1,3-Dichlorobenzene	ND						
1,4-Dichlorobenzene	ND						
Dichlorodifluoromethane	ND						
1,2,4-Trimethylbenzene	ND						
Isopropylbenzene	ND						
Acrolein	ND						
1,2,4-Trichlorobenzene	ND						
Acetone	ND						
Benzene	ND						
Bromodichloromethane	ND						
Bromoform	ND						
Bromomethane	ND						
2-Butanone	ND						
Carbon disulfide	ND						
Carbon tetrachloride	ND						
Dibromochloromethane	ND						
Chlorobenzene	ND						
Chloroethane	ND						
Chloroform	ND						
Chloromethane	ND						
1,1-Dichloroethane	ND						
1,2-Dichloroethane	ND						
1,1-Dichloroethene	ND						
trans-1,2-Dichloroethene	ND						
cis-1,2-Dichloroethene	ND						
1,2-Dichloropropane	ND						
cis-1,3-Dichloropropene	ND						
trans-1,3-Dichloropropene	ND						
Ethylbenzene	ND						
2-Hexanone	ND						
Methylene chloride	ND						
4-Methyl-2-pentanone (MIBK)	ND						
Styrene	ND						
1,1,2,2-Tetrachloroethane	ND						
Tetrachloroethene	ND						
Toluene	ND						
1,1,1-Trichloroethane	ND						

* %=% REC, R=RPD, A=ABS Diff., D=% Diff.

CORE LABORATORIES

QUALITY CONTROL RESULTS

Job Number.: 907997

Report Date.: 07/27/99

CUSTOMER: Marathon Oil Company PROJECT: MOC - Midland Groundwater ATTN: Mr. Paul Peacock

QC Type	Description	Reag. Code	Lab ID	Dilution Factor	Date	Time
MB	Method Blank				07/23/1999	1107

Parameter/Test Description	QC Result	QC Result	True Value	Orig. Value	Calc. Result	*	Limits
1,1,2-Trichloroethane	ND						
Trichloroethene	ND						
Vinyl acetate	ND						
Vinyl chloride	ND						
Xylenes (total)	ND						

LCS	Laboratory Control Sample	CLPVOAMS2			07/23/1999	1139

Parameter/Test Description	QC Result	QC Result	True Value	Orig. Value	Calc. Result	*	Limits
Benzene	49.39		50		98.8	%	67-130
Chlorobenzene	51.78		50		103.6	%	74-116
1,1-Dichloroethene	39.93		50		79.9	%	51-141
Toluene	52.68		50		105.4	%	75-114
Trichloroethene	52.22		50		104.4	%	72-114
Xylenes (total)	ND						

MS	Matrix Spike	CLPVOAMS2	908094-1	10	07/23/1999	1904

Parameter/Test Description	QC Result	QC Result	True Value	Orig. Value	Calc. Result	*	Limits
Benzene	49.83		50	ND	99.7	%	67-130
Chlorobenzene	51.76		50	ND	103.5	%	74-116
1,1-Dichloroethene	42.42		50	ND	84.8	%	51-141
Toluene	51.75		50	ND	103.5	%	75-114
Trichloroethene	40.80		50	ND	81.6	%	72-114
Xylenes (total)	ND			ND			

MSD	Matrix Spike Duplicate	CLPVOAMS2	908094-1	10	07/23/1999	1936

Parameter/Test Description	QC Result	QC Result	True Value	Orig. Value	Calc. Result	*	Limits
Benzene	51.73	49.83	50	ND	103.5	%	67-130
					3.7	R	30
Chlorobenzene	52.82	51.76	50	ND	105.6	%	74-116
					2.0	R	30
1,1-Dichloroethene	42.95	42.42	50	ND	85.9	%	51-141
					1.2	R	30
Toluene	52.50	51.75	50	ND	105.0	%	75-114
					1.4	R	30
Trichloroethene	53.39	40.80	50	ND	106.8	%	72-114
					26.7	R	30
Xylenes (total)	ND	ND		ND			

* %=% REC, R=RPD, A=ABS Diff., D=% Diff.

CORE LABORATORIES

SURROGATE RECOVERIES REPORT

Job Number.: 907997

Report Date.: 07/27/99

CUSTOMER: Marathon Oil Company

PROJECT: MOC - Midland Groundwater

ATTN: Mr. Paul Peacock

Method.....: Volatile Organic Compounds
Method Code.....: 826TCL

Batch.....: 43684
Analyst.....: weh

Surrogate	Units
1,2-Dichloroethane-d4 (surrogate)	ug/L

Lab ID	Matrix	QC Type	Dilution	Result	True Value	Percent Recovery	Limits	Flag	Date	Time
		MB		47.23	50.00	94.5	76-120		07/22/1999	0928
		LCS		47.35	50.00	94.7	76-120		07/22/1999	0959
908101-1				47.97	50.00	95.9	76-120		07/22/1999	1030
907961-1			10	47.48	50.00	95.0	76-120		07/22/1999	1101
907961-1		MS	10	48.70	50.00	97.4	76-120		07/22/1999	1133
907961-1		MSD	10	48.02	50.00	96.0	76-120		07/22/1999	1204
908029-1				47.70	50.00	95.4	76-120		07/22/1999	1344
908100-1			5	49.13	50.00	98.3	76-120		07/22/1999	1416
908099-2			5	49.19	50.00	98.4	76-120		07/22/1999	1448
907997-2				47.79	50.00	95.6	76-120		07/22/1999	1519
907997-3				48.19	50.00	96.4	76-120		07/22/1999	1551
907997-4				48.24	50.00	96.5	76-120		07/22/1999	1622
907997-5				48.52	50.00	97.0	76-120		07/22/1999	1654
908114-13				47.89	50.00	95.8	76-120		07/22/1999	1726
908114-14				48.26	50.00	96.5	76-120		07/22/1999	1757
908114-1				48.64	50.00	97.3	76-120		07/22/1999	1828
908114-2				48.12	50.00	96.2	76-120		07/22/1999	1900
908114-3				48.25	50.00	96.5	76-120		07/22/1999	1931

Surrogate	Units
BFB (Surrogate)	ug/L

Lab ID	Matrix	QC Type	Dilution	Result	True Value	Percent Recovery	Limits	Flag	Date	Time
		MB		49.30	50.00	98.6	85-115		07/22/1999	0928
		LCS		47.58	50.00	95.2	85-115		07/22/1999	0959
908101-1				47.94	50.00	95.9	85-115		07/22/1999	1030
907961-1			10	47.93	50.00	95.9	85-115		07/22/1999	1101
907961-1		MS	10	47.84	50.00	95.7	85-115		07/22/1999	1133
907961-1		MSD	10	48.25	50.00	96.5	85-115		07/22/1999	1204
908029-1				46.18	50.00	92.4	85-115		07/22/1999	1344
908100-1			5	46.86	50.00	93.7	85-115		07/22/1999	1416
908099-2			5	46.44	50.00	92.9	85-115		07/22/1999	1448
907997-2				46.78	50.00	93.6	85-115		07/22/1999	1519
907997-3				47.17	50.00	94.3	85-115		07/22/1999	1551
907997-4				46.49	50.00	93.0	85-115		07/22/1999	1622
907997-5				46.50	50.00	93.0	85-115		07/22/1999	1654
908114-13				46.28	50.00	92.6	85-115		07/22/1999	1726
908114-14				46.31	50.00	92.6	85-115		07/22/1999	1757
908114-1				46.65	50.00	93.3	85-115		07/22/1999	1828
908114-2				46.54	50.00	93.1	85-115		07/22/1999	1900
908114-3				47.05	50.00	94.1	85-115		07/22/1999	1931

CORE LABORATORIES

SURROGATE RECOVERIES REPORT

Job Number.: 907997

Report Date.: 07/27/99

CUSTOMER: Marathon Oil Company PROJECT: MOC - Midland Groundwater ATTN: Mr. Paul Peacock

Surrogate	Units
Toluene-d8	ug/L

Lab ID	Matrix	QC Type	Dilution	Result	True Value	Percent Recovery	Limits	Flag	Date	Time
		MB		47.11	50.00	94.2	85-112		07/22/1999	0928
		LCS		46.97	50.00	93.9	85-112		07/22/1999	0959
908101-1				47.03	50.00	94.1	85-112		07/22/1999	1030
907961-1			10	46.82	50.00	93.6	85-112		07/22/1999	1101
907961-1		MS	10	47.79	50.00	95.6	85-112		07/22/1999	1133
907961-1		MSD	10	47.04	50.00	94.1	85-112		07/22/1999	1204
908029-1				47.92	50.00	95.8	85-112		07/22/1999	1344
908100-1			5	48.05	50.00	96.1	85-112		07/22/1999	1416
908099-2			5	47.31	50.00	94.6	85-112		07/22/1999	1448
907997-2				47.81	50.00	95.6	85-112		07/22/1999	1519
907997-3				48.09	50.00	96.2	85-112		07/22/1999	1551
907997-4				47.97	50.00	95.9	85-112		07/22/1999	1622
907997-5				47.97	50.00	95.9	85-112		07/22/1999	1654
908114-13				47.79	50.00	95.6	85-112		07/22/1999	1726
908114-14				47.58	50.00	95.2	85-112		07/22/1999	1757
908114-1				48.12	50.00	96.2	85-112		07/22/1999	1828
908114-2				47.85	50.00	95.7	85-112		07/22/1999	1900
908114-3				47.70	50.00	95.4	85-112		07/22/1999	1931

Method.....: Volatile Organic Compounds
Method Code.....: 826TCL

Batch.....: 43697
Analyst.....: rm

Surrogate	Units
1,2-Dichloroethane-d4 (surrogate)	ug/L

Lab ID	Matrix	QC Type	Dilution	Result	True Value	Percent Recovery	Limits	Flag	Date	Time
		MB		50.95	50.00	101.9	76-120		07/22/1999	1428
		LCS		51.67	50.00	103.3	76-120		07/22/1999	1507
907997-1			100	51.78	50.00	103.6	76-120		07/22/1999	1540
907997-1		MS	100	52.53	50.00	105.1	76-120		07/22/1999	1612
907997-1		MSD	100	53.95	50.00	107.9	76-120		07/22/1999	1645

Surrogate	Units
BFB (Surrogate)	ug/L

Lab ID	Matrix	QC Type	Dilution	Result	True Value	Percent Recovery	Limits	Flag	Date	Time
		MB		47.61	50.00	95.2	85-115		07/22/1999	1428
		LCS		48.41	50.00	96.8	85-115		07/22/1999	1507
907997-1			100	48.56	50.00	97.1	85-115		07/22/1999	1540
907997-1		MS	100	48.72	50.00	97.4	85-115		07/22/1999	1612
907997-1		MSD	100	49.79	50.00	99.6	85-115		07/22/1999	1645

CORE LABORATORIES

SURROGATE RECOVERIES REPORT

Job Number.: 907997

Report Date.: 07/27/99

CUSTOMER: Marathon Oil Company PROJECT: MOC - Midland Groundwater ATTN: Mr. Paul Peacock

Surrogate	Units
Toluene-d8	ug/L

Lab ID	Matrix	QC Type	Dilution	Result	True Value	Percent Recovery	Limits	Flag	Date	Time
		MB		48.96	50.00	97.9	85-112		07/22/1999	1428
		LCS		49.66	50.00	99.3	85-112		07/22/1999	1507
907997-1			100	49.24	50.00	98.5	85-112		07/22/1999	1540
907997-1		MS	100	49.76	50.00	99.5	85-112		07/22/1999	1612
907997-1		MSD	100	50.91	50.00	101.8	85-112		07/22/1999	1645

Method.....: Volatile Organic Compounds Batch.....: 43784
Method Code.....: 826TCL Analyst.....: rm

Surrogate	Units
1,2-Dichloroethane-d4 (surrogate)	ug/L

Lab ID	Matrix	QC Type	Dilution	Result	True Value	Percent Recovery	Limits	Flag	Date	Time
		MB		52.66	50.00	105.3	76-120		07/23/1999	1107
		LCS		54.72	50.00	109.4	76-120		07/23/1999	1139
907997-5			5	54.64	50.00	109.3	76-120		07/23/1999	1212
908114-4			20	54.33	50.00	108.7	76-120		07/23/1999	1247
908114-5				53.53	50.00	107.1	76-120		07/23/1999	1320
908156-11			200	54.82	50.00	109.6	76-120		07/23/1999	1352
908156-12			200	55.49	50.00	111.0	76-120		07/23/1999	1424
908156-13			200	55.03	50.00	110.1	76-120		07/23/1999	1457
908156-14			50	54.27	50.00	108.5	76-120		07/23/1999	1532
908156-15			50	53.00	50.00	106.0	76-120		07/23/1999	1607
908156-16			50	53.18	50.00	106.4	76-120		07/23/1999	1643
908012-1			10	53.46	50.00	106.9	76-120		07/23/1999	1725
908013-1			10	53.93	50.00	107.9	76-120		07/23/1999	1800
908094-1			10	53.56	50.00	107.1	76-120		07/23/1999	1833
908094-1		MS	10	51.67	50.00	103.3	76-120		07/23/1999	1904
908094-1		MSD	10	52.65	50.00	105.3	76-120		07/23/1999	1936

Surrogate	Units
BFB (Surrogate)	ug/L

Lab ID	Matrix	QC Type	Dilution	Result	True Value	Percent Recovery	Limits	Flag	Date	Time
		MB		48.06	50.00	96.1	85-115		07/23/1999	1107
		LCS		48.11	50.00	96.2	85-115		07/23/1999	1139
907997-5			5	48.29	50.00	96.6	85-115		07/23/1999	1212
908114-4			20	49.04	50.00	98.1	85-115		07/23/1999	1247
908114-5				46.79	50.00	93.6	85-115		07/23/1999	1320
908156-11			200	46.24	50.00	92.5	85-115		07/23/1999	1352
908156-12			200	47.16	50.00	94.3	85-115		07/23/1999	1424
908156-13			200	48.81	50.00	97.6	85-115		07/23/1999	1457
908156-14			50	48.54	50.00	97.1	85-115		07/23/1999	1532

CORE LABORATORIES

SURROGATE RECOVERIES REPORT

Job Number.: 907997

Report Date.: 07/27/99

CUSTOMER: Marathon Oil Company PROJECT: MOC - Midland Groundwater ATTN: Mr. Paul Peacock

Surrogate	Units
BFB (Surrogate)	ug/L

Lab ID	Matrix	QC Type	Dilution	Result	True Value	Percent Recovery	Limits	Flag	Date	Time
908156-15			50	48.88	50.00	97.8	85-115		07/23/1999	1607
908156-16			50	49.29	50.00	98.6	85-115		07/23/1999	1643
908012-1			10	48.30	50.00	96.6	85-115		07/23/1999	1725
908013-1			10	47.83	50.00	95.7	85-115		07/23/1999	1800
908094-1			10	47.53	50.00	95.1	85-115		07/23/1999	1833
908094-1		MS	10	48.17	50.00	96.3	85-115		07/23/1999	1904
908094-1		MSD	10	47.93	50.00	95.9	85-115		07/23/1999	1936

Surrogate	Units
Toluene-d8	ug/L

Lab ID	Matrix	QC Type	Dilution	Result	True Value	Percent Recovery	Limits	Flag	Date	Time
		MB		49.81	50.00	99.6	85-112		07/23/1999	1107
		LCS		50.48	50.00	101.0	85-112		07/23/1999	1139
907997-5			5	49.77	50.00	99.5	85-112		07/23/1999	1212
908114-4			20	49.87	50.00	99.7	85-112		07/23/1999	1247
908114-5				49.86	50.00	99.7	85-112		07/23/1999	1320
908156-11			200	50.52	50.00	101.0	85-112		07/23/1999	1352
908156-12			200	50.07	50.00	100.1	85-112		07/23/1999	1424
908156-13			200	51.35	50.00	102.7	85-112		07/23/1999	1457
908156-14			50	50.45	50.00	100.9	85-112		07/23/1999	1532
908156-15			50	49.19	50.00	98.4	85-112		07/23/1999	1607
908156-16			50	49.75	50.00	99.5	85-112		07/23/1999	1643
908012-1			10	49.07	50.00	98.1	85-112		07/23/1999	1725
908013-1			10	49.05	50.00	98.1	85-112		07/23/1999	1800
908094-1			10	48.58	50.00	97.2	85-112		07/23/1999	1833
908094-1		MS	10	48.05	50.00	96.1	85-112		07/23/1999	1904
908094-1		MSD	10	47.93	50.00	95.9	85-112		07/23/1999	1936

CORE LABORATORIES

QUALITY ASSURANCE FOOTER

METHOD REFERENCES

1. EPA SW-846, Test Methods for Evaluating Solid Waste Update I, IIA, IIB, III
2. Standard Methods for the Examination of Water and Wastewater, 18th Edition
3. EPA 600/4-79-020, Methods of Chemical Analysis for Waters and Wastes, March 1983
4. Federal Register, Friday, October 26, 1984 (40 CFR Part 136)
5. American Society for Testing and Materials, Volumes 5.01, 5.02, 5.03, 11.01,11.02,11.03,11.04
6. EPA Methods for Environmental Samples

COMMENTS

All methods of chemical analysis have a statistical uncertainty associated with the results. Unless otherwise indicated, the data in this report are within the limits of uncertainty as specified in the referenced method. Quality Control acceptance criteria are based either on actual laboratory performance or on limits specified in the referenced method. The date and time of analysis indicated on the QA report may not reflect the actual time of analysis for QC samples. All data are reported on an "as received" basis unless otherwise indicated. Data reported in the QA report may be lower than sample data due to dilution of samples into the calibration range of the analysis. Sample concentration for solid samples are calculated on an as received (wet) basis. Unless otherwise indicated, volatiles by gas chromatography (GC) are reported from a single column. Volatile analysis by GC on low level soil extractions are conducted at room temperature.

FLAGS, FOOTNOTES AND ABBREVIATIONS (as needed)

NA	=	Not Analyzed	ND	=	Not detected at a value greater than the reporting limit
N/A	=	Not applicable	NC	=	Not calculable due to values lower than the reporting limit
ug/L	=	Micrograms per liter	mg/L	=	Milligrams per liter
ug/Kg	=	Micrograms per kilogram	mg/kg	=	Milligrams per kilogram
U	=	Undetected			
J	=	Indicates value is > MDL, but < Reporting Limit			
B	=	Analyte was detected in the method blank analyzed with this sample.			
D	=	Surrogate recoveries are not calculated due to sample dilution.			
X	=	Surrogate recovery is outside quality control limits.			
Y	=	Spike or spike duplicate recovery is outside quality control limits.			
Z	=	Relative percent difference for a spike and spike duplicate is outside quality control limits. The precision of the method was impacted by matrix.			
^	=	Indicates value is above QC acceptance criteria.			

QC SAMPLE IDENTIFICATIONS

MB	=	Method Blank	SB	=	Storage Blank
RB	=	Reagent Blank	EB	=	Extraction Blank
PB	=	Preparation Blank	CALB	=	Calibration Blank
MD	=	Method Duplicate	RS	=	Reference Standard
LCS	=	Laboratory Control Sample	LCSD	=	Laboratory Control Sample Duplicate
MS	=	Matrix Spike	MSD	=	Matrix Spike Duplicate
ICB	=	Initial Calibration Blank	CCB	=	Continuing Calibration Blank
ICV	=	Initial Calibration Verification	ICB	=	Initial Calibration Blank
PDS	=	Post Digestion Spike	SS	=	Surrogate Spike
ISA	=	Interference Check standard "A"	ISB	=	Interference Check Standard "B"
ISCAB	=	Interference Check Sample AB	MSA	=	Method of Standard Additions
CAL	=	Calibration standard	SD	=	Serial Dilution
MST	=	TCLP Matrix Spike	MSQ	=	TCLP Matrix Spike Duplicate
PST	=	TCLP Post Digestion Spike	LCT	=	TCLP Laboratory Control Sample

SUBCONTRACTED LABORATORY LOCATIONS

CORE Laboratories:	Anaheim, California	*AN	Aurora, Colorado	*AU
	Casper, Wyoming	*CA	Corpus Christi, Texas	*CC
	Houston, Texas (Env)	*HE	Houston, Texas (Pet)	*HP
	Other (Detailed in Case Narrative)	*XX		

rpjsckl | Job Sample Receipt Checklist Report 07/20/99 | V2

Job Number.....: 907997 Location.: 57211 Customer Job ID.....: Job Check List Date.: 07/20/99
Project Number.: 96000651 Project Description.: Marathon Oil Co., Midland, Tx Project Manager.....: lpa
Customer.....: Marathon Oil Company Contact.: Mr. Paul Peacock

Questions ?	(Y/N)	Comments
Chain-of-Custody Present?.....	Y	
Custody seal on shipping container?.....	N	
...If "yes", custody seal intact?.....		
Custody seals on sample containers?.....	N	
...If "yes", custody seal intact?.....		
Samples chilled?.....	Y	RECEIVED ON BLUE ICE
Temperature of cooler acceptable? (4 deg C +/- 2).		
Samples received intact (good condition)?.....	Y	
Volatile samples acceptable? (no headspace).....	N	MW-1 HAS NO BUBBLES
Correct containers used?.....	Y	
Adequate sample volume provided?.....	Y	
Samples preserved correctly?.....	Y	
Samples received within holding-time?.....	Y	
Agreement between COC and sample labels?.....	Y	
Additional.....		
Comments.....		
Sample Custodian Signature.....		

CORELAB

CORE LABORATORIES, INC.

No. 187614

CHAIN OF CUSTODY RECORD

CUSTOMER INFORMATION	PROJECT INFORMATION
COMPANY: Marathon Oil Co	PROJECT NAME/NUMBER: Bertha Barber
SEND REPORT TO: Paul Peacock	BILLING INFORMATION
ADDRESS: PO Box 552	BILL TO: Paul Peacock
Midland Tx 79707	ADDRESS: Marathon Oil Co
	PO Box 552 Midland TX
PHONE: 915-687-8398	PHONE: 915-687-8398
FAX: 915-687-8305	FAX: 915-687-8305 PO NO.:

LAB JOB NO. 907997

SAMPLE NO.	SAMPLE DESCRIPTION	SAMPLE DATE	SAMPLE TIME	SAMPLE MATRIX	CONTAINER	PRESERV.	NUMBER OF CONTAINERS	ANALYSIS / METHOD REQUEST: BTEX								REMARKS / PRECAUTIONS
1	MW1	7-15-99	1300	H_2O	(2)40ml	HCL		X								
2	MW2	7-15-99	1330	H_2O	(2)40ml	HCL		X								
3	MW3	7-15-99	1400	H2O	(2)40ml	HCL		X								
4	MW 4	7-15-99	1430	H_2O	(2)40ml	HCL		X								
5	MW 5	7-15-99	1500	H_2O	(2)40ml	HCL		X								

SAMPLER: MFG

SHIPMENT METHOD: Fed Ex

AIRBILL NO.:

REQUIRED TURNAROUND:* ☐ SAME DAY ☐ 24 HOURS ☐ 48 HOURS ☐ 72 HOURS ☐ 5 DAYS ☐ 10 DAYS ☒ ROUTINE OTHER

RELINQUISHED BY	DATE	RELINQUISHED BY	DATE	RELINQUISHED BY	DATE
SIGNATURE: Michael E Gilbert	7-16-99	SIGNATURE:		SIGNATURE:	
PRINTED NAME/COMPANY: Michael E Gilbert / Rhino	TIME 1430	PRINTED NAME/COMPANY:	TIME	PRINTED NAME/COMPANY:	TIME
1. RECEIVED BY	DATE	2. RECEIVED BY	DATE	3. RECEIVED BY	DATE
SIGNATURE:	7/20/99	SIGNATURE:		SIGNATURE:	
PRINTED NAME/COMPANY: M. Chenoweth / CORE	TIME 0??	PRINTED NAME/COMPANY:	TIME	PRINTED NAME/COMPANY:	TIME

☐ Anaheim, CA
1250 E. Gene Autry Way
Anaheim, CA 92805
(714) 937-1094 Fax (714) 937-1170

☐ Aurora, CO
10703 E. Bethany Drive
Aurora, CO 80014
(303) 751-1780 Fax (303) 751-1784

☐ Casper, WY
420 W. First Street
Casper, WY 82601
(307) 235-5741 Fax (307) 266-1676

☐ Corpus Christi, TX
1733 N. Padre Island Drive
Corpus Christi, TX 78408
(361) 289-2673 Fax (361) 289-2471

☐ Houston, TX (Env)
6310 Rothway Drive
Houston, TX 77040
(713) 690-4444 Fax (713) 690-5646

☐ Houston, TX (Pet)
8210 Mosley Road
Houston, TX 77075
(713) 943-0776 Fax (713) 943-3046

☐ Lake Charles, LA
3645 Beglis Parkway
Sulphur, LA 70663
(318) 583-4926 Fax (318) 583-4928

☒ Valparaiso, IN
2400 Cumberland Drive
Valparaiso, IN 46383
(219) 464-2389 Fax (219) 462-2953

ORIGINAL

September 1999 Monitoring Event

CORE LABORATORIES

ANALYTICAL REPORT

JOB NUMBER: 910852

Prepared For:

Marathon Oil Company
125 West Missouri Street
P.O. Box 552
Midland, TX 79702-0552

Attention: Mr. Paul Peacock

Date: 09/30/99

Signature

Date 9/30/99

Name: Les Arnold

Title: Laboratory Manager

2400 Cumberland Drive
Valparaiso, IN 46383

PHONE: 219-464-2389
FAX..: 219-462-2953

CORE LABORATORIES

SAMPLE INFORMATION
Date: 09/30/99

Job Number.: 910852
Customer...: Marathon Oil Company
Attn.....: Mr. Paul Peacock

Project Number.....: 96000703
Customer Project ID....: BERTHA BARBER
Project Description....: MOC - Bertha Barber

Laboratory Sample ID	Customer Sample ID	Sample Matrix	Date Sampled	Time Sampled	Date Received	Time Received
910852-1	MW-5	Aqueous	09/22/1999	12:30	09/24/1999	13:28
910852-2	MW-6	Aqueous	09/22/1999	13:00	09/24/1999	13:28
910852-3	MW-10	Aqueous	09/22/1999	14:00	09/24/1999	13:28
910852-4	PZ-2	Aqueous	09/22/1999	15:30	09/24/1999	13:28
910852-5	PZ-4	Aqueous	09/22/1999	14:40	09/24/1999	13:28
910852-6	PZ-3	Aqueous	09/22/1999	16:20	09/24/1999	13:28
910852-7	MW-7	Aqueous	09/22/1999	17:15	09/24/1999	13:28
910852-8	MW-4	Aqueous	09/23/1999	10:00	09/24/1999	13:28
910852-9	MW-3	Aqueous	09/23/1999	11:00	09/24/1999	13:28
910852-10	MW-2	Aqueous	09/23/1999	12:00	09/24/1999	13:28
910852-11	PZ-1	Aqueous	09/23/1999	13:00	09/24/1999	13:28
910852-12	DUP-1	Aqueous	09/23/1999	12:00	09/24/1999	13:28
910852-13	MW-9	Aqueous	09/23/1999	14:00	09/24/1999	13:28
910852-14	MW-8	Aqueous	09/23/1999	15:00	09/24/1999	13:28
910852-15	MW-11	Aqueous	09/23/1999	16:00	09/24/1999	13:28
910852-16	FIELD BLANK	Aqueous	09/23/1999	00:00	09/24/1999	13:28
910852-17	TRIP BLANK	Aqueous			09/24/1999	13:31

CORE LABORATORIES

LABORATORY TEST RESULTS

Job Number: 910852

Date: 09/30/99

CUSTOMER: Marathon Oil Company PROJECT: BERTHA BARBER ATTN: Mr. Paul Peacock

TEST METHOD	PARAMETER/TEST DESCRIPTION	SAMPLE RESULT	REPORTING LIMIT	UNITS	ANALYZED	TECH	BATCH
Customer Sample ID: MW-5	Date Sampled.....: 09/22/99 Time Sampled: 12:30	Lab Sample ID: 910852-1 Date Received: 09/24/99		Sample Matrix: Aqueous Time Received: 13:28			
EPA 325.2	Chloride	860	200	mg/L	09/27/99 2008	jlh	46980
EPA 8260B	Volatile Organic Compounds						
	Benzene	160	5	ug/L	09/29/99 1147	weh	47114
	Ethylbenzene	6	5	ug/L	09/29/99 1147	weh	47114
	Toluene	<5	5	ug/L	09/29/99 1147	weh	47114
	Xylenes (total)	<10	10	ug/L	09/29/99 1147	weh	47114
Customer Sample ID: MW-6	Date Sampled.....: 09/22/99 Time Sampled: 13:00	Lab Sample ID: 910852-2 Date Received: 09/24/99		Sample Matrix: Aqueous Time Received: 13:28			
EPA 325.2	Chloride	2400	200	mg/L	09/27/99 2052	jlh	46980
EPA 8260B	Volatile Organic Compounds						
	Benzene	<5	5	ug/L	09/24/99 1729	weh	46878
	Ethylbenzene	<5	5	ug/L	09/24/99 1729	weh	46878
	Toluene	<5	5	ug/L	09/24/99 1729	weh	46878
	Xylenes (total)	<10	10	ug/L	09/24/99 1729	weh	46878
Customer Sample ID: MW-10	Date Sampled.....: 09/22/99 Time Sampled: 14:00	Lab Sample ID: 910852-3 Date Received: 09/24/99		Sample Matrix: Aqueous Time Received: 13:28			
EPA 325.2	Chloride	2200	200	mg/L	09/27/99 2011	jlh	46980
EPA 8260B	Volatile Organic Compounds						
	Benzene	2900	200	ug/L	09/27/99 1509	weh	46982
	Ethylbenzene	520	50	ug/L	09/24/99 1844	weh	46919
	Toluene	800	200	ug/L	09/27/99 1509	weh	46982
	Xylenes (total)	600	100	ug/L	09/24/99 1844	weh	46919
Customer Sample ID: PZ-2	Date Sampled.....: 09/22/99 Time Sampled: 15:30	Lab Sample ID: 910852-4 Date Received: 09/24/99		Sample Matrix: Aqueous Time Received: 13:28			
EPA 325.2	Chloride	4400	200	mg/L	09/27/99 2013	jlh	46980
EPA 8260B	Volatile Organic Compounds						
	Benzene	<5	5	ug/L	09/24/99 1800	weh	46878
	Ethylbenzene	<5	5	ug/L	09/24/99 1800	weh	46878
	Toluene	<5	5	ug/L	09/24/99 1800	weh	46878
	Xylenes (total)	<10	10	ug/L	09/24/99 1800	weh	46878
Customer Sample ID: PZ-4	Date Sampled.....: 09/22/99 Time Sampled: 14:40	Lab Sample ID: 910852-5 Date Received: 09/24/99		Sample Matrix: Aqueous Time Received: 13:28			
EPA 325.2	Chloride	3300	200	mg/L	09/27/99 2015	jlh	46980
EPA 8260B	Volatile Organic Compounds						
	Benzene	<5	5	ug/L	09/24/99 1831	weh	46878
	Ethylbenzene	<5	5	ug/L	09/24/99 1831	weh	46878

CORE LABORATORIES

LABORATORY TEST RESULTS

Job Number: 910852 Date: 09/30/99

CUSTOMER: Marathon Oil Company PROJECT: BERTHA BARBER ATTN: Mr. Paul Peacock

TEST METHOD	PARAMETER/TEST DESCRIPTION	SAMPLE RESULT	REPORTING LIMIT	UNITS	ANALYZED	TECH	BATCH
	Toluene	<5	5	ug/L	09/24/99 1831	weh	46878
	Xylenes (total)	<10	10	ug/L	09/24/99 1831	weh	46878
Customer Sample ID: PZ-3	Lab Sample ID: 910852-6	Sample Matrix: Aqueous					
Date Sampled.....: 09/22/99 Time Sampled: 16:20	Date Received: 09/24/99	Time Received: 13:28					
EPA 325.2	Chloride	1700	200	mg/L	09/27/99 2017	jlh	46980
EPA 8260B	Volatile Organic Compounds						
	Benzene	9	5	ug/L	09/27/99 0943	weh	46982
	Ethylbenzene	<5	5	ug/L	09/27/99 0943	weh	46982
	Toluene	<5	5	ug/L	09/27/99 0943	weh	46982
	Xylenes (total)	<10	10	ug/L	09/27/99 0943	weh	46982
Customer Sample ID: MW-7	Lab Sample ID: 910852-7	Sample Matrix: Aqueous					
Date Sampled.....: 09/22/99 Time Sampled: 17:15	Date Received: 09/24/99	Time Received: 13:28					
EPA 325.2	Chloride	1100	200	mg/L	09/27/99 2019	jlh	46980
EPA 8260B	Volatile Organic Compounds						
	Benzene	<5	5	ug/L	09/27/99 1014	weh	46982
	Ethylbenzene	<5	5	ug/L	09/27/99 1014	weh	46982
	Toluene	<5	5	ug/L	09/27/99 1014	weh	46982
	Xylenes (total)	<10	10	ug/L	09/27/99 1014	weh	46982
Customer Sample ID: MW-4	Lab Sample ID: 910852-8	Sample Matrix: Aqueous					
Date Sampled.....: 09/23/99 Time Sampled: 10:00	Date Received: 09/24/99	Time Received: 13:28					
EPA 325.2	Chloride	510	200	mg/L	09/27/99 2021	jlh	46980
EPA 8260B	Volatile Organic Compounds						
	Benzene	18	5	ug/L	09/27/99 1130	weh	46982
	Ethylbenzene	12	5	ug/L	09/27/99 1130	weh	46982
	Toluene	<5	5	ug/L	09/27/99 1130	weh	46982
	Xylenes (total)	<10	10	ug/L	09/27/99 1130	weh	46982
Customer Sample ID: MW-3	Lab Sample ID: 910852-9	Sample Matrix: Aqueous					
Date Sampled.....: 09/23/99 Time Sampled: 11:00	Date Received: 09/24/99	Time Received: 13:28					
EPA 325.2	Chloride	1300	200	mg/L	09/27/99 2022	jlh	46980
EPA 8260B	Volatile Organic Compounds						
	Benzene	<5	5	ug/L	09/27/99 1202	weh	46982
	Ethylbenzene	<5	5	ug/L	09/27/99 1202	weh	46982
	Toluene	<5	5	ug/L	09/27/99 1202	weh	46982
	Xylenes (total)	<10	10	ug/L	09/27/99 1202	weh	46982
Customer Sample ID: MW-2	Lab Sample ID: 910852-10	Sample Matrix: Aqueous					
Date Sampled.....: 09/23/99 Time Sampled: 12:00	Date Received: 09/24/99	Time Received: 13:28					
EPA 325.2	Chloride	2500	200	mg/L	09/27/99 2024	jlh	46980
EPA 8260B	Volatile Organic Compounds						

CORE LABORATORIES

LABORATORY TEST RESULTS

Job Number: 910852 Date: 09/30/99

CUSTOMER: Marathon Oil Company PROJECT: BERTHA BARBER ATTN: Mr. Paul Peacock

TEST METHOD	PARAMETER/TEST DESCRIPTION	SAMPLE RESULT	REPORTING LIMIT	UNITS	ANALYZED	TECH	BATCH
	Benzene	<5	5	ug/L	09/27/99 1233	weh	46982
	Ethylbenzene	<5	5	ug/L	09/27/99 1233	weh	46982
	Toluene	<5	5	ug/L	09/27/99 1233	weh	46982
	Xylenes (total)	<10	10	ug/L	09/27/99 1233	weh	46982
Customer Sample ID: PZ-1 Date Sampled.....: 09/23/99 Time Sampled: 13:00	Lab Sample ID: 910852-11 Date Received: 09/24/99	Sample Matrix: Aqueous Time Received: 13:28					
EPA 325.2	Chloride	1600	200	mg/L	09/27/99 2026	jlh	46980
EPA 8260B	Volatile Organic Compounds						
	Benzene	<5	5	ug/L	09/24/99 1500	weh	46919
	Ethylbenzene	<5	5	ug/L	09/24/99 1500	weh	46919
	Toluene	<5	5	ug/L	09/24/99 1500	weh	46919
	Xylenes (total)	<10	10	ug/L	09/24/99 1500	weh	46919
Customer Sample ID: DUP-1 Date Sampled.....: 09/23/99 Time Sampled: 12:00	Lab Sample ID: 910852-12 Date Received: 09/24/99	Sample Matrix: Aqueous Time Received: 13:28					
EPA 325.2	Chloride	1600	200	mg/L	09/27/99 2028	jlh	46980
EPA 8260B	Volatile Organic Compounds						
	Benzene	<5	5	ug/L	09/24/99 1934	weh	46878
	Ethylbenzene	<5	5	ug/L	09/24/99 1934	weh	46878
	Toluene	<5	5	ug/L	09/24/99 1934	weh	46878
	Xylenes (total)	<10	10	ug/L	09/24/99 1934	weh	46878
Customer Sample ID: MW-9 Date Sampled.....: 09/23/99 Time Sampled: 14:00	Lab Sample ID: 910852-13 Date Received: 09/24/99	Sample Matrix: Aqueous Time Received: 13:28					
EPA 325.2	Chloride	1100	200	mg/L	09/27/99 2033	jlh	46980
EPA 8260B	Volatile Organic Compounds						
	Benzene	8	5	ug/L	09/24/99 1634	weh	46919
	Ethylbenzene	<5	5	ug/L	09/24/99 1634	weh	46919
	Toluene	<5	5	ug/L	09/24/99 1634	weh	46919
	Xylenes (total)	<10	10	ug/L	09/24/99 1634	weh	46919
Customer Sample ID: MW-8 Date Sampled.....: 09/23/99 Time Sampled: 15:00	Lab Sample ID: 910852-14 Date Received: 09/24/99	Sample Matrix: Aqueous Time Received: 13:28					
EPA 325.2	Chloride	1900	200	mg/L	09/27/99 2035	jlh	46980
EPA 8260B	Volatile Organic Compounds						
	Benzene	<5	5	ug/L	09/27/99 1304	weh	46982
	Ethylbenzene	<5	5	ug/L	09/27/99 1304	weh	46982
	Toluene	<5	5	ug/L	09/27/99 1304	weh	46982
	Xylenes (total)	<10	10	ug/L	09/27/99 1304	weh	46982
Customer Sample ID: MW-11 Date Sampled.....: 09/23/99 Time Sampled: 16:00	Lab Sample ID: 910852-15 Date Received: 09/24/99	Sample Matrix: Aqueous Time Received: 13:28					
EPA 325.2	Chloride	1100	200	mg/L	09/27/99 2036	jlh	46980

CORE LABORATORIES

LABORATORY TEST RESULTS

Job Number: 910852 Date: 09/30/99

CUSTOMER: Marathon Oil Company PROJECT: BERTHA BARBER ATTN: Mr. Paul Peacock

TEST METHOD	PARAMETER/TEST DESCRIPTION	SAMPLE RESULT	REPORTING LIMIT	UNITS	ANALYZED	TECH	BATCH
EPA 8260B	Volatile Organic Compounds						
	Benzene	<5	5	ug/L	09/24/99 1705	weh	46919
	Ethylbenzene	<5	5	ug/L	09/24/99 1705	weh	46919
	Toluene	<5	5	ug/L	09/24/99 1705	weh	46919
	Xylenes (total)	<10	10	ug/L	09/24/99 1705	weh	46919
Customer Sample ID: FIELD BLANK		Lab Sample ID: 910852-16		Sample Matrix: Aqueous			
Date Sampled.....: 09/23/99	Time Sampled: 00:00	Date Received: 09/24/99		Time Received: 13:28			
EPA 325.2	Chloride	<1.0	1.0	mg/L	09/27/99 2052	jlh	46980
EPA 8260B	Volatile Organic Compounds						
	Benzene	<5	5	ug/L	09/24/99 1736	weh	46919
	Ethylbenzene	<5	5	ug/L	09/24/99 1736	weh	46919
	Toluene	<5	5	ug/L	09/24/99 1736	weh	46919
	Xylenes (total)	<10	10	ug/L	09/24/99 1736	weh	46919
Customer Sample ID: TRIP BLANK		Lab Sample ID: 910852-17		Sample Matrix: Aqueous			
Date Sampled.....:	Time Sampled:	Date Received: 09/24/99		Time Received: 13:31			
EPA 8260B	Volatile Organic Compounds						
	Benzene	<5	5	ug/L	09/24/99 1903	weh	46878
	Ethylbenzene	<5	5	ug/L	09/24/99 1903	weh	46878
	Toluene	<5	5	ug/L	09/24/99 1903	weh	46878
	Xylenes (total)	<10	10	ug/L	09/24/99 1903	weh	46878

CORE LABORATORIES

QUALITY CONTROL RESULTS

Job Number.: 910852

Report Date.: 09/30/99

CUSTOMER: Marathon Oil Company

PROJECT: MOC - Bertha Barber

ATTN: Mr. Paul Peacock

Test Method.....: EPA 325.2
Method Description.: Chloride (Colorimetric)
Parameter.....: Chloride

Batch.....: 46980
Units.....: mg/L

Analyst...: jlh

QC	Lab ID	Reagent	QC Result	QC Result	True Value	Orig. Value	Calc. Result	*	Limits	Date	Time
ICV		V199229H	20.286776		20		101.4	%	85-115	09/27/1999	1959
ICB			0.151553							09/27/1999	1959
MD	910832-1		23.998241			23.854351	0.6	R	20	09/27/1999	2004
MS	910832-1	V16003402	43.017124		20.000000	23.854351	95.8	%	75-125	09/27/1999	2005
CCV		V199229H	20.374388		20		101.9	%	85-115	09/27/1999	2009
CCB			0.126934							09/27/1999	2009
CCV		V199229H	20.207478		20		101.0	%	85-115	09/27/1999	2028
CCB			0.105152							09/27/1999	2029
MD	910882-1		22.704636			22.979490	1.2	R	20	09/27/1999	2030
MS	910882-1	V16003402	42.916481		20.000000	22.979490	99.7	%	75-125	09/27/1999	2031
CCV		V199229H	20.430521		20		102.2	%	85-115	09/27/1999	2039
CCB			0.109884							09/27/1999	2040
MB			0.550010							09/27/1999	2040
RIN		E	0.126260							09/27/1999	2048
RIN		E	0.181231							09/27/1999	2049
CCV		V199229H	20.460037		20		102.3	%	85-115	09/27/1999	2049
CCB			0.111468							09/27/1999	2050
MD	910763-3		24.892447			20.945221	17.2	R	20	09/27/1999	2054
RIN		E	0.129556							09/27/1999	2054
CCV		V199229H	20.526520		20		102.6	%	85-115	09/27/1999	2055
CCB			0.424193							09/27/1999	2056

* %=% REC, R=RPD, A=ABS Diff., D=% Diff.

CORE LABORATORIES

SURROGATE RECOVERIES REPORT

Job Number.: 910852

Report Date.: 09/30/99

CUSTOMER: Marathon Oil Company

PROJECT: MOC - Bertha Barber

ATTN: Mr. Paul Peacock

Method.....: Volatile Organic Compounds
Method Code.....: 8260V1

Batch.....: 46878
Analyst.....: weh

Surrogate	Units
1,2-Dichloroethane-d4 (surrogate)	ug/L

Lab ID	Matrix	QC Type	Dilution	Result	True Value	Percent Recovery	Limits	Flag	Date	Time
		MB		45.44	50.00	90.9	76-120		09/24/1999	0932
		LCS		46.31	50.00	92.6	76-120		09/24/1999	1003
910760-15				46.26	50.00	92.5	76-120		09/24/1999	1034
910760-15		MS		46.00	50.00	92.0	76-120		09/24/1999	1105
910760-15		MSD		46.85	50.00	93.7	76-120		09/24/1999	1136
910760-8				46.70	50.00	93.4	76-120		09/24/1999	1207
910760-11			10	46.70	50.00	93.4	76-120		09/24/1999	1241
910760-4			100	44.70	50.00	89.4	76-120		09/24/1999	1316
910760-16			100	45.58	50.00	91.2	76-120		09/24/1999	1350
910760-16				46.23	50.00	92.5	76-120		09/24/1999	1452
910852-2				45.04	50.00	90.1	76-120		09/24/1999	1729
910852-4				45.81	50.00	91.6	76-120		09/24/1999	1800
910852-5				47.07	50.00	94.1	76-120		09/24/1999	1831
910852-17				44.88	50.00	89.8	76-120		09/24/1999	1903
910852-12				46.36	50.00	92.7	76-120		09/24/1999	1934

Surrogate	Units
BFB (Surrogate)	ug/L

Lab ID	Matrix	QC Type	Dilution	Result	True Value	Percent Recovery	Limits	Flag	Date	Time
		MB		49.29	50.00	98.6	85-115		09/24/1999	0932
		LCS		48.77	50.00	97.5	85-115		09/24/1999	1003
910760-15				48.95	50.00	97.9	85-115		09/24/1999	1034
910760-15		MS		50.48	50.00	101.0	85-115		09/24/1999	1105
910760-15		MSD		49.09	50.00	98.2	85-115		09/24/1999	1136
910760-8				49.57	50.00	99.1	85-115		09/24/1999	1207
910760-11			10	50.03	50.00	100.1	85-115		09/24/1999	1241
910760-4			100	49.36	50.00	98.7	85-115		09/24/1999	1316
910760-16			100	48.80	50.00	97.6	85-115		09/24/1999	1350
910760-16				50.19	50.00	100.4	85-115		09/24/1999	1452
910852-2				51.40	50.00	102.8	85-115		09/24/1999	1729
910852-4				50.25	50.00	100.5	85-115		09/24/1999	1800
910852-5				49.11	50.00	98.2	85-115		09/24/1999	1831
910852-17				49.65	50.00	99.3	85-115		09/24/1999	1903
910852-12				49.40	50.00	98.8	85-115		09/24/1999	1934

CORE LABORATORIES

SURROGATE RECOVERIES REPORT

Job Number.: 910852

Report Date.: 09/30/99

CUSTOMER: Marathon Oil Company | PROJECT: MOC - Bertha Barber | ATTN: Mr. Paul Peacock

Surrogate	Units
Toluene-d8	ug/L

Lab ID	Matrix	QC Type	Dilution	Result	True Value	Percent Recovery	Limits	Flag	Date	Time
		MB		49.15	50.00	98.3	85-112		09/24/1999	0932
		LCS		50.67	50.00	101.3	85-112		09/24/1999	1003
910760-15				49.86	50.00	99.7	85-112		09/24/1999	1034
910760-15		MS		50.65	50.00	101.3	85-112		09/24/1999	1105
910760-15		MSD		49.60	50.00	99.2	85-112		09/24/1999	1136
910760-8				50.44	50.00	100.9	85-112		09/24/1999	1207
910760-11			10	50.05	50.00	100.1	85-112		09/24/1999	1241
910760-4			100	49.67	50.00	99.3	85-112		09/24/1999	1316
910760-16			100	49.50	50.00	99.0	85-112		09/24/1999	1350
910760-16				49.90	50.00	99.8	85-112		09/24/1999	1452
910852-2				50.23	50.00	100.5	85-112		09/24/1999	1729
910852-4				50.23	50.00	100.5	85-112		09/24/1999	1800
910852-5				49.91	50.00	99.8	85-112		09/24/1999	1831
910852-17				50.08	50.00	100.2	85-112		09/24/1999	1903
910852-12				49.81	50.00	99.6	85-112		09/24/1999	1934

Method.....: Volatile Organic Compounds
Method Code.....: 8260V1

Batch.....: 46919
Analyst.....: weh

Surrogate	Units
1,2-Dichloroethane-d4 (surrogate)	ug/L

Lab ID	Matrix	QC Type	Dilution	Result	True Value	Percent Recovery	Limits	Flag	Date	Time
		MB		50.60	50.00	101.2	76-120		09/24/1999	1347
		LCS		52.51	50.00	105.0	76-120		09/24/1999	1429
910852-11				54.40	50.00	108.8	76-120		09/24/1999	1500
910852-11		MS		53.95	50.00	107.9	76-120		09/24/1999	1531
910852-11		MSD		55.26	50.00	110.5	76-120		09/24/1999	1602
910852-13				57.28	50.00	114.6	76-120		09/24/1999	1634
910852-15				57.87	50.00	115.7	76-120		09/24/1999	1705
910852-16				57.47	50.00	114.9	76-120		09/24/1999	1736
910852-3			10	54.91	50.00	109.8	76-120		09/24/1999	1844

Surrogate	Units
BFB (Surrogate)	ug/L

Lab ID	Matrix	QC Type	Dilution	Result	True Value	Percent Recovery	Limits	Flag	Date	Time
		MB		53.10	50.00	106.2	85-115		09/24/1999	1347
		LCS		54.56	50.00	109.1	85-115		09/24/1999	1429
910852-11				53.65	50.00	107.3	85-115		09/24/1999	1500
910852-11		MS		53.16	50.00	106.3	85-115		09/24/1999	1531
910852-11		MSD		53.31	50.00	106.6	85-115		09/24/1999	1602
910852-13				52.53	50.00	105.1	85-115		09/24/1999	1634

CORE LABORATORIES

SURROGATE RECOVERIES REPORT

Job Number.: 910852

Report Date.: 09/30/99

CUSTOMER: Marathon Oil Company PROJECT: MOC - Bertha Barber ATTN: Mr. Paul Peacock

Surrogate	Units
BFB (Surrogate)	ug/L

Lab ID	Matrix	QC Type	Dilution	Result	True Value	Percent Recovery	Limits	Flag	Date	Time
910852-15				53.17	50.00	106.3	85-115		09/24/1999	1705
910852-16				53.20	50.00	106.4	85-115		09/24/1999	1736
910852-3			10	54.28	50.00	108.6	85-115		09/24/1999	1844

Surrogate	Units
Toluene-d8	ug/L

Lab ID	Matrix	QC Type	Dilution	Result	True Value	Percent Recovery	Limits	Flag	Date	Time
		MB		48.29	50.00	96.6	85-112		09/24/1999	1347
		LCS		47.63	50.00	95.3	85-112		09/24/1999	1429
910852-11				47.97	50.00	95.9	85-112		09/24/1999	1500
910852-11		MS		47.63	50.00	95.3	85-112		09/24/1999	1531
910852-11		MSD		47.75	50.00	95.5	85-112		09/24/1999	1602
910852-13				48.93	50.00	97.9	85-112		09/24/1999	1634
910852-15				47.75	50.00	95.5	85-112		09/24/1999	1705
910852-16				48.43	50.00	96.9	85-112		09/24/1999	1736
910852-3			10	47.84	50.00	95.7	85-112		09/24/1999	1844

Method.....: Volatile Organic Compounds
Method Code.....: 8260V1

Batch.....: 46982
Analyst.....: weh

Surrogate	Units
1,2-Dichloroethane-d4 (surrogate)	ug/L

Lab ID	Matrix	QC Type	Dilution	Result	True Value	Percent Recovery	Limits	Flag	Date	Time
		MB		53.16	50.00	106.3	76-120		09/27/1999	0804
		LCS		53.61	50.00	107.2	76-120		09/27/1999	0840
910852-6				54.84	50.00	109.7	76-120		09/27/1999	0943
910852-7				55.46	50.00	110.9	76-120		09/27/1999	1014
910852-8				50.74	50.00	101.5	76-120		09/27/1999	1130
910852-9				53.28	50.00	106.6	76-120		09/27/1999	1202
910852-10				52.86	50.00	105.7	76-120		09/27/1999	1233
910852-14				54.33	50.00	108.7	76-120		09/27/1999	1304
910852-7		MS		53.79	50.00	107.6	76-120		09/27/1999	1335
910852-7		MSD		52.39	50.00	104.8	76-120		09/27/1999	1406
910852-3			50	53.81	50.00	107.6	76-120		09/27/1999	1509

CORE LABORATORIES

SURROGATE RECOVERIES REPORT

Job Number.: 910852 Report Date.: 09/30/99

CUSTOMER: Marathon Oil Company PROJECT: MOC - Bertha Barber ATTN: Mr. Paul Peacock

Surrogate	Units
BFB (Surrogate)	ug/L

Lab ID	Matrix	QC Type	Dilution	Result	True Value	Percent Recovery	Limits	Flag	Date	Time
		MB		52.26	50.00	104.5	85-115		09/27/1999	0804
		LCS		50.30	50.00	100.6	85-115		09/27/1999	0840
910852-6				51.31	50.00	102.6	85-115		09/27/1999	0943
910852-7				50.44	50.00	100.9	85-115		09/27/1999	1014
910852-8				48.21	50.00	96.4	85-115		09/27/1999	1130
910852-9				49.92	50.00	99.8	85-115		09/27/1999	1202
910852-10				49.23	50.00	98.5	85-115		09/27/1999	1233
910852-14				50.31	50.00	100.6	85-115		09/27/1999	1304
910852-7		MS		49.16	50.00	98.3	85-115		09/27/1999	1335
910852-7		MSD		51.35	50.00	102.7	85-115		09/27/1999	1406
910852-3			50	51.25	50.00	102.5	85-115		09/27/1999	1509

Surrogate	Units
Toluene-d8	ug/L

Lab ID	Matrix	QC Type	Dilution	Result	True Value	Percent Recovery	Limits	Flag	Date	Time
		MB		47.08	50.00	94.2	85-112		09/27/1999	0804
		LCS		46.96	50.00	93.9	85-112		09/27/1999	0840
910852-6				48.28	50.00	96.6	85-112		09/27/1999	0943
910852-7				49.21	50.00	98.4	85-112		09/27/1999	1014
910852-8				50.93	50.00	101.9	85-112		09/27/1999	1130
910852-9				47.96	50.00	95.9	85-112		09/27/1999	1202
910852-10				48.96	50.00	97.9	85-112		09/27/1999	1233
910852-14				50.49	50.00	101.0	85-112		09/27/1999	1304
910852-7		MS		52.50	50.00	105.0	85-112		09/27/1999	1335
910852-7		MSD		51.98	50.00	104.0	85-112		09/27/1999	1406
910852-3			50	48.45	50.00	96.9	85-112		09/27/1999	1509

Method.....: Volatile Organic Compounds Batch.....: 47114
Method Code.....: 826TCL Analyst.....: weh

Surrogate	Units
1,2-Dichloroethane-d4 (surrogate)	ug/L

Lab ID	Matrix	QC Type	Dilution	Result	True Value	Percent Recovery	Limits	Flag	Date	Time
910763-1	Oil		2000	64.54	50.00	129.1	80-120	X	09/29/1999	0326
		MB		48.74	50.00	97.5	76-120		09/29/1999	0934
		LCS		51.52	50.00	103.0	76-120		09/29/1999	1011
911019-2				52.41	50.00	104.8	76-120		09/29/1999	1042
911019-1			50	54.39	50.00	108.8	76-120		09/29/1999	1116
910852-1				57.01	50.00	114.0	76-120		09/29/1999	1147
910979-1			10	56.35	50.00	112.7	76-120		09/29/1999	1219
910979-1		MS	10	58.52	50.00	117.0	76-120		09/29/1999	1250

CORE LABORATORIES

SURROGATE RECOVERIES REPORT

Job Number.: 910852

Report Date.: 09/30/99

CUSTOMER: Marathon Oil Company | PROJECT: MOC - Bertha Barber | ATTN: Mr. Paul Peacock

Surrogate	Units
1,2-Dichloroethane-d4 (surrogate)	ug/L

Lab ID	Matrix	QC Type	Dilution	Result	True Value	Percent Recovery	Limits	Flag	Date	Time
910979-1		MSD	10	60.10	50.00	120.2	76-120	X	09/29/1999	1321

Surrogate	Units
BFB (Surrogate)	ug/L

Lab ID	Matrix	QC Type	Dilution	Result	True Value	Percent Recovery	Limits	Flag	Date	Time
910763-1	Oil		2000	41.02	50.00	82.0	71-121		09/29/1999	0326
		MB		49.87	50.00	99.7	85-115		09/29/1999	0934
		LCS		49.24	50.00	98.5	85-115		09/29/1999	1011
911019-2				48.85	50.00	97.7	85-115		09/29/1999	1042
911019-1			50	49.55	50.00	99.1	85-115		09/29/1999	1116
910852-1				49.94	50.00	99.9	85-115		09/29/1999	1147
910979-1			10	49.22	50.00	98.4	85-115		09/29/1999	1219
910979-1		MS	10	49.94	50.00	99.9	85-115		09/29/1999	1250
910979-1		MSD	10	50.68	50.00	101.4	85-115		09/29/1999	1321

Surrogate	Units
Toluene-d8	ug/L

Lab ID	Matrix	QC Type	Dilution	Result	True Value	Percent Recovery	Limits	Flag	Date	Time
910763-1	Oil		2000	46.58	50.00	93.2	85-109		09/29/1999	0326
		MB		49.11	50.00	98.2	85-112		09/29/1999	0934
		LCS		48.55	50.00	97.1	85-112		09/29/1999	1011
911019-2				49.02	50.00	98.0	85-112		09/29/1999	1042
911019-1			50	48.58	50.00	97.2	85-112		09/29/1999	1116
910852-1				49.19	50.00	98.4	85-112		09/29/1999	1147
910979-1			10	48.25	50.00	96.5	85-112		09/29/1999	1219
910979-1		MS	10	48.75	50.00	97.5	85-112		09/29/1999	1250
910979-1		MSD	10	47.66	50.00	95.3	85-112		09/29/1999	1321

CORE LABORATORIES

QUALITY CONTROL RESULTS

Job Number.: 910852

Report Date.: 09/30/99

CUSTOMER: Marathon Oil Company | PROJECT: MOC - Bertha Barber | ATTN: Mr. Paul Peacock

QC Type	Description	Reag. Code	Lab ID	Dilution Factor	Date	Time

Test Method.....: EPA 8260B
Method Description.: Volatile Organic Compounds
Batch.....: 46878
Units.....: ug/L
Analyst...: weh

MB	Method Blank				09/24/1999	0932

Parameter/Test Description	QC Result	QC Result	True Value	Orig. Value	Calc. Result	*	Limits
Benzene	ND						
Ethylbenzene	ND						
Toluene	ND						
Xylenes (total)	ND						

LCS	Laboratory Control Sample	CLPVOAMS2			09/24/1999	1003

Parameter/Test Description	QC Result	QC Result	True Value	Orig. Value	Calc. Result	*	Limits
Benzene	48.56		50		97.1	%	67-130
Toluene	48.46		50		96.9	%	75-114

MS	Matrix Spike	CLPVOAMS2	910760-15		09/24/1999	1105

Parameter/Test Description	QC Result	QC Result	True Value	Orig. Value	Calc. Result	*	Limits
Benzene	49.77		50	2.38	94.8	%	67-130
Toluene	48.07		50	ND	96.1	%	75-114

MSD	Matrix Spike Duplicate	CLPVOAMS2	910760-15		09/24/1999	1136

Parameter/Test Description	QC Result	QC Result	True Value	Orig. Value	Calc. Result	*	Limits
Benzene	48.71	49.77	50	2.38	92.7	%	67-130
					2.2	R	30
Toluene	47.42	48.07	50	ND	94.8	%	75-114
					1.4	R	30

Test Method.....: EPA 8260B
Method Description.: Volatile Organic Compounds
Batch.....: 46919
Units.....: ug/L
Analyst...: weh

MB	Method Blank				09/24/1999	1347

Parameter/Test Description	QC Result	QC Result	True Value	Orig. Value	Calc. Result	*	Limits
Benzene	ND						
Ethylbenzene	ND						
Toluene	ND						
Xylenes (total)	ND						

* %=% REC, R=RPD, A=ABS Diff., D=% Diff.

CORE LABORATORIES

QUALITY CONTROL RESULTS

Job Number.: 910852

Report Date.: 09/30/99

CUSTOMER: Marathon Oil Company PROJECT: MOC - Bertha Barber ATTN: Mr. Paul Peacock

QC Type	Description	Reag. Code	Lab ID	Dilution Factor	Date	Time
LCS	Laboratory Control Sample	CLPVOAMS2			09/24/1999	1429

Parameter/Test Description	QC Result	QC Result	True Value	Orig. Value	Calc. Result	*	Limits
Benzene	46.06		50		92.1	%	67-130
Toluene	47.82		50		95.6	%	75-114

QC Type	Description	Reag. Code	Lab ID	Dilution Factor	Date	Time
MS	Matrix Spike	CLPVOAMS2	910852-11		09/24/1999	1531

Parameter/Test Description	QC Result	QC Result	True Value	Orig. Value	Calc. Result	*	Limits
Benzene	47.35		50	1.04	92.6	%	67-130
Toluene	48.51		50	<5	97.0	%	75-114

QC Type	Description	Reag. Code	Lab ID	Dilution Factor	Date	Time
MSD	Matrix Spike Duplicate	CLPVOAMS2	910852-11		09/24/1999	1602

Parameter/Test Description	QC Result	QC Result	True Value	Orig. Value	Calc. Result	*	Limits
Benzene	46.73	47.35	50	1.04	91.4	%	67-130
					1.3	R	30
Toluene	48.25	48.51	50	<5	96.5	%	75-114
					0.5	R	30

Test Method.....: EPA 8260B
Method Description.: Volatile Organic Compounds
Batch.....: 46982
Units.....: ug/L
Analyst...: weh

QC Type	Description	Reag. Code	Lab ID	Dilution Factor	Date	Time
MB	Method Blank				09/27/1999	0804

Parameter/Test Description	QC Result	QC Result	True Value	Orig. Value	Calc. Result	*	Limits
Benzene	ND						
Ethylbenzene	ND						
Toluene	ND						
Xylenes (total)	ND						

QC Type	Description	Reag. Code	Lab ID	Dilution Factor	Date	Time
LCS	Laboratory Control Sample	CLPVOAMS2			09/27/1999	0840

Parameter/Test Description	QC Result	QC Result	True Value	Orig. Value	Calc. Result	*	Limits
Benzene	46.85		50		93.7	%	67-130
Toluene	47.85		50		95.7	%	75-114

QC Type	Description	Reag. Code	Lab ID	Dilution Factor	Date	Time
MS	Matrix Spike	CLPVOAMS2	910852-7		09/27/1999	1335

Parameter/Test Description	QC Result	QC Result	True Value	Orig. Value	Calc. Result	*	Limits
Benzene	47.23		50	<5	94.5	%	67-130
Toluene	49.74		50	<5	99.5	%	75-114

* %=% REC, R=RPD, A=ABS Diff., D=% Diff.

CORE LABORATORIES

QUALITY CONTROL RESULTS

Job Number.: 910852

Report Date.: 09/30/99

CUSTOMER: Marathon Oil Company | PROJECT: MOC - Bertha Barber | ATTN: Mr. Paul Peacock

QC Type	Description	Reag. Code	Lab ID	Dilution Factor	Date	Time
MSD	Matrix Spike Duplicate	CLPVOAMS2	910852-7		09/27/1999	1406

Parameter/Test Description	QC Result	QC Result	True Value	Orig. Value	Calc. Result	*	Limits
Benzene	47.01	47.23	50	<5	94.0	%	67-130
					0.5	R	30
Toluene	48.50	49.74	50	<5	97.0	%	75-114
					2.5	R	30

Test Method.....: EPA 8260B
Method Description.: Volatile Organic Compounds
Batch.....: 47114
Units.....: ug/L
Analyst...: weh

MB	Method Blank				09/29/1999	0934

Parameter/Test Description	QC Result	QC Result	True Value	Orig. Value	Calc. Result	*	Limits
Benzene	ND						
Ethylbenzene	ND						
Toluene	ND						
Xylenes (total)	ND						

LCS	Laboratory Control Sample	CLPVOAMS2			09/29/1999	1011

Parameter/Test Description	QC Result	QC Result	True Value	Orig. Value	Calc. Result	*	Limits
Benzene	43.48		50		87.0	%	67-130
Toluene	47.31		50		94.6	%	75-114

MS	Matrix Spike	CLPVOAMS2	910979-1	10	09/29/1999	1250

Parameter/Test Description	QC Result	QC Result	True Value	Orig. Value	Calc. Result	*	Limits
Benzene	44.27		50	ND	88.5	%	67-130
Toluene	47.51		50	ND	95.0	%	75-114

MSD	Matrix Spike Duplicate	CLPVOAMS2	910979-1	10	09/29/1999	1321

Parameter/Test Description	QC Result	QC Result	True Value	Orig. Value	Calc. Result	*	Limits
Benzene	44.09	44.27	50	ND	88.2	%	67-130
					0.4	R	30
Toluene	46.73	47.51	50	ND	93.5	%	75-114
					1.7	R	30

* %=% REC, R=RPD, A=ABS Diff., D=% Diff.

rpjsckl

Job Sample Receipt Checklist Report

09/24/99

V2

Job Number.....: 910852 Location.: 57211 Customer Job ID.....: Job Check List Date.: 09/24/99
Project Number.: 96000703 Project Description.: MOC - Bertha Barber Project Manager.....: lpa
Customer.....: Marathon Oil Company Contact.: Mr. Paul Peacock

Questions ?	(Y/N)	Comments
Chain-of-Custody Present?.....	Y	
Custody seal on shipping container?.....		
...If "yes", custody seal intact?.....		
Custody seals on sample containers?.....		
...If "yes", custody seal intact?.....		
Samples chilled?.....	Y	
Temperature of cooler acceptable? (4 deg C +/- 2).		RECEIVED ON ICE
Samples received intact (good condition)?.....	Y	
Volatile samples acceptable? (no headspace).....	Y	
Correct containers used?.....	Y	
Adequate sample volume provided?.....	Y	
Samples preserved correctly?.....	Y	
Samples received within holding-time?.....	Y	
Agreement between COC and sample labels?.....	Y	
Additional.....		
Comments.....		
Sample Custodian Signature.....		

GERAGHTY & MILLER, INC.
Environment and Infrastructure
a heidemij company

Laboratory Task Order No. _____

CHAIN-OF-CUSTODY RECORD

Project Number NP 000449.0002

Project Location Bertha Barber

Laboratory Core

Sampler(s)/Affiliation McNeese, AGM
Midland, Tx

	SAMPLE IDENTITY	Code	Date/~~Time~~ Sampled	Time ~~Lab ID~~	BTEX (HCl) 40 ml	Chlorides 250 ml								TOTAL
16	Field Blank	L	9-23-99	—	3	1								4
17	Trip Blank				2	—								2

Total No. of Bottles/Containers 66

Sample Code: L = Liquid; S = Solid; A = Air

Relinquished by: [signature]	Organization: Incomm	Date 9/23/99 Time 1730	Seal Intact? Yes No N/A
Received by: J. Bl	Organization: Cor	Date 9/23/99 Time 1700	
Relinquished by:	Organization:	Date / / Time	Seal Intact? Yes No N/A
Received by:	Organization:	Date / / Time	

Special Instructions/Remarks:

Delivery Method: ☐ In Person ☑ Common Carrier FedEx (SPECIFY) ☐ Lab Courier ☐ Other _____ (SPECIFY)

GERAGHTY & MILLER, INC.
Environment and Infrastructure
a heidemij company

Laboratory Task Order No. 910857

CHAIN-OF-CUSTODY RECORD

Project Number NP000449.0002

Project Location Bertha Barber

Laboratory Core

Sampler(s)/Affiliation McNeese, AGM
Midland, Texas

SAMPLE BOTTLE / CONTAINER DESCRIPTION

	SAMPLE IDENTITY	Code	Date/~~Time~~ Sampled	Time ~~Lab ID~~	BTEX 40 ml (Hcl)	Chlorides 250 ml								TOTAL
1	MW 5	L	9-22-99	1230	3	1								4
2	MW 6			1300	3	1								4
3	MW 10			1400	3	1								4
4	PZ-2			1530	3	1								4
5	PZ-4			1440	3	1								4
6	PZ-3			1620	3	1								4
7	MW 7			1715	3	1								4
8	MW 4		9-23-99	1000	3	1								4
9	MW 3			1100	3	1								4
10	MW 2			1200	3	1								4
11	PZ-1			1300	3	1								4
12	DUP-1			1200	3	1								4
13	MW 9			1400	3	1								4
14	MW 8			1500	3	1								4
15	MW 11			1600	3	1								4
													Total No. of Bottles/ Containers	60

Sample Code: L = Liquid; S = Solid; A = Air

Relinquished by: [signature]	Organization: Arcadis	Date 9 23 199	Time 1730	Seal Intact? Yes No N/A
Received by: Jan Bobb	Organization: OH	Date 9 24 199	Time 1200	
Relinquished by:	Organization:	Date / /	Time	Seal Intact? Yes No N/A
Received by:	Organization:	Date / /	Time	

Special Instructions/Remarks: *Note - send invoice to Mr. Paul Peacock w/ Marathon Oil

Delivery Method: ☐ In Person ☑ Common Carrier Fed EX (SPECIFY) ☐ Lab Courier ☐ Other _____ (SPECIFY)

CORE LABORATORIES

QUALITY ASSURANCE FOOTER

METHOD REFERENCES

1. EPA SW-846, Test Methods for Evaluating Solid Waste Update I, IIA, IIB, III
2. Standard Methods for the Examination of Water and Wastewater, 18th Edition
3. EPA 600/4-79-020, Methods of Chemical Analysis for Waters and Wastes, March 1983
4. Federal Register, Friday, October 26, 1984 (40 CFR Part 136)
5. American Society for Testing and Materials, Volumes 5.01, 5.02, 5.03, 11.01,11.02,11.03,11.04
6. EPA Methods for Environmental Samples

COMMENTS

All methods of chemical analysis have a statistical uncertainty associated with the results. Unless otherwise indicated, the data in this report are within the limits of uncertainty as specified in the referenced method. Quality Control acceptance criteria are based either on actual laboratory performance or on limits specified in the referenced method. The date and time of analysis indicated on the QA report may not reflect the actual time of analysis for QC samples. All data are reported on an "as received" basis unless otherwise indicated. Data reported in the QA report may be lower than sample data due to dilution of samples into the calibration range of the analysis. Sample concentration for solid samples are calculated on an as received (wet) basis. Unless otherwise indicated, volatiles by gas chromatography (GC) are reported from a single column. Volatile analysis by GC on low level soil extractions are conducted at room temperature.

FLAGS, FOOTNOTES AND ABBREVIATIONS (as needed)

NA	=	Not Analyzed	ND	=	Not detected at a value greater than the reporting limit
N/A	=	Not applicable	NC	=	Not calculable due to values lower than the reporting limit
ug/L	=	Micrograms per liter	mg/L	=	Milligrams per liter
ug/Kg	=	Micrograms per kilogram	mg/kg	=	Milligrams per kilogram
U	=	Undetected			
J	=	Indicates value is > MDL, but < Reporting Limit			
B	=	Analyte was detected in the method blank analyzed with this sample.			
D	=	Surrogate recoveries are not calculated due to sample dilution.			
X	=	Surrogate recovery is outside quality control limits.			
Y	=	Spike or spike duplicate recovery is outside quality control limits.			
Z	=	Relative percent difference for a spike and spike duplicate is outside quality control limits. The precision of the method was impacted by matrix.			
^	=	Indicates value is above QC acceptance criteria.			

QC SAMPLE IDENTIFICATIONS

MB	=	Method Blank	SB	=	Storage Blank
RB	=	Reagent Blank	EB	=	Extraction Blank
PB	=	Preparation Blank	CALB	=	Calibration Blank
MD	=	Method Duplicate	RS	=	Reference Standard
LCS	=	Laboratory Control Sample	LCSD	=	Laboratory Control Sample Duplicate
MS	=	Matrix Spike	MSD	=	Matrix Spike Duplicate
ICB	=	Initial Calibration Blank	CCB	=	Continuing Calibration Blank
ICV	=	Initial Calibration Verification	ICB	=	Initial Calibration Blank
PDS	=	Post Digestion Spike	SS	=	Surrogate Spike
ISA	=	Interference Check standard "A"	ISB	=	Interference Check Standard "B"
ISCAB	=	Interference Check Sample AB	MSA	=	Method of Standard Additions
CAL	=	Calibration standard	SD	=	Serial Dilution
MST	=	TCLP Matrix Spike	MSQ	=	TCLP Matrix Spike Duplicate
PST	=	TCLP Post Digestion Spike	LCT	=	TCLP Laboratory Control Sample

SUBCONTRACTED LABORATORY LOCATIONS

CORE Laboratories:	Anaheim, California	*AN	Aurora, Colorado	*AU
	Casper, Wyoming	*CA	Corpus Christi, Texas	*CC
	Houston, Texas (Env)	*HE	Houston, Texas (Pet)	*HP
	Other (Detailed in Case Narrative)	*XX		

December 1999 Monitoring Event

Committed To *Your* Success

ANALYTICAL REPORT

JOB NUMBER: 914280

Prepared For:

Marathon Oil Company
125 West Missouri Street
P.O. Box 552
Midland, TX 79702-0552

Attention: Mr. Paul Peacock

Date: 12/29/1999

RECEIVED
JAN 04 2000

Les Arnold
Signature

12/29/99
Date

Name: Les Arnold

Title: Laboratory Manager

Severn Trent Laboratories
2400 Cumberland Drive
Valparaiso, IN 46383

PHONE: 219-464-2389
FAX..: 219-462-2953

Committed To *Your* Success

SAMPLE INFORMATION
Date: 12/29/1999

Job Number.: 914280
Customer...: Marathon Oil Company
Attn.....: Mr. Paul Peacock

Project Number.....: 96000703
Customer Project ID....: NP0004490002
Project Description....: MOC - Bertha Barber

Laboratory Sample ID	Customer Sample ID	Sample Matrix	Date Sampled	Time Sampled	Date Received	Time Received
914280-1	MW-02	Aqueous	12/15/1999	01:00	12/16/1999	13:37
914280-2	MW-03	Aqueous	12/15/1999	10:00	12/16/1999	13:37
914280-3	MW-04	Aqueous	12/15/1999	08:30	12/16/1999	13:37
914280-4	MW-05	Aqueous	12/15/1999	11:00	12/16/1999	13:37
914280-5	MW-06	Aqueous	12/14/1999	12:00	12/16/1999	13:37
914280-6	MW-07	Aqueous	12/14/1999	03:30	12/16/1999	13:37
914280-7	MW-08	Aqueous	12/14/1999	04:15	12/16/1999	13:37
914280-8	MW-09	Aqueous	12/14/1999	02:00	12/16/1999	13:37
914280-9	MW-11	Aqueous	12/14/1999	05:00	12/16/1999	13:37
914280-10	MW-12	Aqueous	12/14/1999	03:00	12/16/1999	13:37
914280-11	MW-13	Aqueous	12/14/1999	01:00	12/16/1999	13:37
914280-12	DUP-1	Aqueous	12/14/1999	00:00	12/16/1999	13:37
914280-13	FB-1	Aqueous	12/15/1999	08:30	12/16/1999	13:37
914280-14	TRIP BLANK	Aqueous	12/15/1999	00:00	12/16/1999	13:37

Committed To *Your* Success

LABORATORY TEST RESULTS

Job Number: 914280 Date: 12/29/1999

CUSTOMER: Marathon Oil Company PROJECT: NP0004490002 ATTN: Mr. Paul Peacock

Customer Sample ID: MW-02
Date Sampled.....: 12/15/1999
Time Sampled.....: 01:00
Sample Matrix.....: Aqueous

Laboratory Sample ID: 914280-1
Date Received.....: 12/16/1999
Time Received.....: 13:37

TEST METHOD	PARAMETER/TEST DESCRIPTION	SAMPLE RESULT	REPORTING LIMIT	UNITS	DATE	TECH
EPA 160.1	Solids, Total Dissolved (TDS)	5600	10	mg/L	12/20/99	lam
EPA 325.2	Chloride	3000	100	mg/L	12/20/99	jdb
EPA 3010	Acid Digestion, Metals (ICP), Diss.	Complete			12/16/99	chh
EPA 3510	Separatory Funnel Liq/Liq Extraction	Complete			12/20/99	bjl
EPA 6010B	Metals Analysis (ICAP)					
	Barium (Ba), Diss.	0.16	0.01	mg/L	12/16/99	pal
	Iron (Fe), Diss.	<0.05	0.05	mg/L	12/17/99	chh
	Magnesium (Mg), Diss.	126	0.1	mg/L	12/17/99	chh
EPA 8310	Polynuclear Aromatic Hydrocarbons-HPLC					
	Acenaphthene	ND	5.0	ug/L	12/24/99	rm
	Acenaphthylene	ND	5.0	ug/L	12/24/99	rm
	Anthracene	ND	1.0	ug/L	12/24/99	rm
	Benzo(b)fluoranthene	ND	0.10	ug/L	12/24/99	rm
	Benzo(k)fluoranthene	ND	0.10	ug/L	12/24/99	rm
	Benzo(a)anthracene	ND	0.10	ug/L	12/24/99	rm
	Benzo(a)pyrene	<0.10	0.10	ug/L	12/24/99	rm
	Benzo(ghi)perylene	ND	0.10	ug/L	12/24/99	rm
	Chrysene	ND	1.0	ug/L	12/24/99	rm
	Dibenzo(a,h)anthracene	ND	0.10	ug/L	12/24/99	rm
	Fluoranthene	ND	1.0	ug/L	12/24/99	rm
	Fluorene	ND	1.0	ug/L	12/24/99	rm
	Indeno(1,2,3-cd)pyrene	ND	0.10	ug/L	12/24/99	rm
	Naphthalene	ND	5.0	ug/L	12/24/99	rm
	Phenanthrene	ND	1.0	ug/L	12/24/99	rm
	Pyrene	ND	1.0	ug/L	12/24/99	rm
EPA 8021B	BTEX					
	Benzene	ND	5.0	ug/L	12/21/99	weh
	Ethylbenzene	ND	5.0	ug/L	12/21/99	weh
	Toluene	ND	5.0	ug/L	12/21/99	weh
	m&p-Xylenes	ND	10.0	ug/L	12/21/99	weh
	o-Xylene	ND	5.0	ug/L	12/21/99	weh

Committed To *Your* Success

LABORATORY TEST RESULTS

Job Number: 914280

Date: 12/29/1999

CUSTOMER: Marathon Oil Company PROJECT: NP0004490002 ATTN: Mr. Paul Peacock

Customer Sample ID: MW-03
Date Sampled.....: 12/15/1999
Time Sampled.....: 10:00
Sample Matrix.....: Aqueous

Laboratory Sample ID: 914280-2
Date Received.....: 12/16/1999
Time Received.....: 13:37

TEST METHOD	PARAMETER/TEST DESCRIPTION	SAMPLE RESULT	REPORTING LIMIT	UNITS	DATE	TECH
EPA 160.1	Solids, Total Dissolved (TDS)	2800	10	mg/L	12/20/99	lam
EPA 325.2	Chloride	1200	100	mg/L	12/20/99	jdb
EPA 3010	Acid Digestion, Metals (ICP), Diss.	Complete			12/16/99	chh
EPA 3510	Separatory Funnel Liq/Liq Extraction	Complete			12/20/99	bjl
EPA 6010B	Metals Analysis (ICAP)					
	Barium (Ba), Diss.	0.09	0.01	mg/L	12/16/99	pal
	Iron (Fe), Diss.	<0.05	0.05	mg/L	12/17/99	chh
	Magnesium (Mg), Diss.	77.7	0.1	mg/L	12/17/99	chh
EPA 8310	Polynuclear Aromatic Hydrocarbons-HPLC					
	Acenaphthene	ND	5.0	ug/L	12/24/99	rm
	Acenaphthylene	ND	5.0	ug/L	12/24/99	rm
	Anthracene	ND	1.0	ug/L	12/24/99	rm
	Benzo(b)fluoranthene	ND	0.10	ug/L	12/24/99	rm
	Benzo(k)fluoranthene	ND	0.10	ug/L	12/24/99	rm
	Benzo(a)anthracene	ND	0.10	ug/L	12/24/99	rm
	Benzo(a)pyrene	ND	0.10	ug/L	12/24/99	rm
	Benzo(ghi)perylene	ND	0.10	ug/L	12/24/99	rm
	Chrysene	ND	1.0	ug/L	12/24/99	rm
	Dibenzo(a,h)anthracene	ND	0.10	ug/L	12/24/99	rm
	Fluoranthene	<1.0	1.0	ug/L	12/24/99	rm
	Fluorene	ND	1.0	ug/L	12/24/99	rm
	Indeno(1,2,3-cd)pyrene	ND	0.10	ug/L	12/24/99	rm
	Naphthalene	ND	5.0	ug/L	12/24/99	rm
	Phenanthrene	ND	1.0	ug/L	12/24/99	rm
	Pyrene	ND	1.0	ug/L	12/24/99	rm
EPA 8021B	BTEX					
	Benzene	ND	5.0	ug/L	12/22/99	weh
	Ethylbenzene	ND	5.0	ug/L	12/22/99	weh
	Toluene	ND	5.0	ug/L	12/22/99	weh
	m&p-Xylenes	ND	10.0	ug/L	12/22/99	weh
	o-Xylene	<5.0	5.0	ug/L	12/22/99	weh

Committed To *Your* Success

LABORATORY TEST RESULTS

Job Number: 914280

Date: 12/29/1999

CUSTOMER: Marathon Oil Company PROJECT: NP0004490002 ATTN: Mr. Paul Peacock

Customer Sample ID: MW-04
Date Sampled.....: 12/15/1999
Time Sampled.....: 08:30
Sample Matrix.....: Aqueous

Laboratory Sample ID: 914280-3
Date Received.....: 12/16/1999
Time Received.....: 13:37

TEST METHOD	PARAMETER/TEST DESCRIPTION	SAMPLE RESULT	REPORTING LIMIT	UNITS	DATE	TECH
EPA 160.1	Solids, Total Dissolved (TDS)	1600	10	mg/L	12/20/99	lam
EPA 325.2	Chloride	580	20	mg/L	12/20/99	jdb
EPA 3010	Acid Digestion, Metals (ICP), Diss.	Complete			12/16/99	chh
EPA 3510	Separatory Funnel Liq/Liq Extraction	Complete			12/20/99	bjl
EPA 6010B	Metals Analysis (ICAP)					
	Barium (Ba), Diss.	0.87	0.01	mg/L	12/16/99	pal
	Iron (Fe), Diss.	<0.05	0.05	mg/L	12/17/99	chh
	Magnesium (Mg), Diss.	48.4	0.1	mg/L	12/17/99	chh
EPA 8310	Polynuclear Aromatic Hydrocarbons-HPLC					
	Acenaphthene	<5.0	5.0	ug/L	12/24/99	rm
	Acenaphthylene	ND	5.0	ug/L	12/24/99	rm
	Anthracene	ND	1.0	ug/L	12/24/99	rm
	Benzo(b)fluoranthene	ND	0.10	ug/L	12/24/99	rm
	Benzo(k)fluoranthene	ND	0.10	ug/L	12/24/99	rm
	Benzo(a)anthracene	<0.10	0.10	ug/L	12/24/99	rm
	Benzo(a)pyrene	<0.10	0.10	ug/L	12/24/99	rm
	Benzo(ghi)perylene	ND	0.10	ug/L	12/24/99	rm
	Chrysene	<1.0	1.0	ug/L	12/24/99	rm
	Dibenzo(a,h)anthracene	<0.10	0.10	ug/L	12/24/99	rm
	Fluoranthene	4.3	1.0	ug/L	12/24/99	rm
	Fluorene	<1.0	1.0	ug/L	12/24/99	rm
	Indeno(1,2,3-cd)pyrene	ND	0.10	ug/L	12/24/99	rm
	Naphthalene	<5.0	5.0	ug/L	12/24/99	rm
	Phenanthrene	<1.0	1.0	ug/L	12/24/99	rm
	Pyrene	ND	1.0	ug/L	12/24/99	rm
EPA 8021B	BTEX					
	Benzene	24	5.0	ug/L	12/22/99	weh
	Ethylbenzene	22	5.0	ug/L	12/22/99	weh
	Toluene	11	5.0	ug/L	12/22/99	weh
	m&p-Xylenes	33	10.0	ug/L	12/22/99	weh
	o-Xylene	6.7	5.0	ug/L	12/22/99	weh

Committed To *Your* Success

LABORATORY TEST RESULTS

Job Number: 914280

Date: 12/29/1999

CUSTOMER: Marathon Oil Company PROJECT: NP0004490002 ATTN: Mr. Paul Peacock

Customer Sample ID: MW-05
Date Sampled.....: 12/15/1999
Time Sampled.....: 11:00
Sample Matrix.....: Aqueous

Laboratory Sample ID: 914280-4
Date Received.....: 12/16/1999
Time Received.....: 13:37

TEST METHOD	PARAMETER/TEST DESCRIPTION	SAMPLE RESULT	REPORTING LIMIT	UNITS	DATE	TECH
EPA 160.1	Solids, Total Dissolved (TDS)	2500	10	mg/L	12/20/99	lam
EPA 325.2	Chloride	1200	100	mg/L	12/20/99	jdb
EPA 3010	Acid Digestion, Metals (ICP), Diss.	Complete			12/16/99	chh
EPA 3510	Separatory Funnel Liq/Liq Extraction	Complete			12/20/99	bjl
EPA 6010B	Metals Analysis (ICAP)					
	Barium (Ba), Diss.	1.41	0.01	mg/L	12/16/99	pal
	Iron (Fe), Diss.	<0.05	0.05	mg/L	12/17/99	chh
	Magnesium (Mg), Diss.	97.1	0.1	mg/L	12/17/99	chh
EPA 8310	Polynuclear Aromatic Hydrocarbons-HPLC					
	Acenaphthene	ND	5.0	ug/L	12/24/99	rm
	Acenaphthylene	ND	5.0	ug/L	12/24/99	rm
	Anthracene	ND	1.0	ug/L	12/24/99	rm
	Benzo(b)fluoranthene	ND	0.10	ug/L	12/24/99	rm
	Benzo(k)fluoranthene	ND	0.10	ug/L	12/24/99	rm
	Benzo(a)anthracene	ND	0.10	ug/L	12/24/99	rm
	Benzo(a)pyrene	ND	0.10	ug/L	12/24/99	rm
	Benzo(ghi)perylene	ND	0.10	ug/L	12/24/99	rm
	Chrysene	ND	1.0	ug/L	12/24/99	rm
	Dibenzo(a,h)anthracene	ND	0.10	ug/L	12/24/99	rm
	Fluoranthene	<1.0	1.0	ug/L	12/24/99	rm
	Fluorene	<1.0	1.0	ug/L	12/24/99	rm
	Indeno(1,2,3-cd)pyrene	ND	0.10	ug/L	12/24/99	rm
	Naphthalene	<5.0	5.0	ug/L	12/24/99	rm
	Phenanthrene	<1.0	1.0	ug/L	12/24/99	rm
	Pyrene	ND	1.0	ug/L	12/24/99	rm
EPA 8021B	BTEX					
	Benzene	100	5.0	ug/L	12/22/99	weh
	Ethylbenzene	11	5.0	ug/L	12/22/99	weh
	Toluene	7.6	5.0	ug/L	12/22/99	weh
	m&p-Xylenes	<10.0	10.0	ug/L	12/22/99	weh
	o-Xylene	<5.0	5.0	ug/L	12/22/99	weh

Committed To *Your* Success

LABORATORY TEST RESULTS

Job Number: 914280

Date: 12/29/1999

CUSTOMER: Marathon Oil Company PROJECT: NP0004490002 ATTN: Mr. Paul Peacock

Customer Sample ID: MW-06
Date Sampled.....: 12/14/1999
Time Sampled.....: 12:00
Sample Matrix.....: Aqueous

Laboratory Sample ID: 914280-5
Date Received.....: 12/16/1999
Time Received.....: 13:37

TEST METHOD	PARAMETER/TEST DESCRIPTION	SAMPLE RESULT	REPORTING LIMIT	UNITS	DATE	TECH
EPA 160.1	Solids, Total Dissolved (TDS)	5200	10	mg/L	12/20/99	lam
EPA 325.2	Chloride	2900	100	mg/L	12/20/99	jdb
EPA 3010	Acid Digestion, Metals (ICP), Diss.	Complete			12/16/99	chh
EPA 3510	Separatory Funnel Liq/Liq Extraction	Complete			12/20/99	bjl
EPA 6010B	Metals Analysis (ICAP)					
	Barium (Ba), Diss.	0.15	0.01	mg/L	12/16/99	pal
	Iron (Fe), Diss.	<0.05	0.05	mg/L	12/17/99	chh
	Magnesium (Mg), Diss.	162	0.1	mg/L	12/17/99	chh
EPA 8310	Polynuclear Aromatic Hydrocarbons-HPLC					
	Acenaphthene	ND	5.0	ug/L	12/24/99	rm
	Acenaphthylene	ND	5.0	ug/L	12/24/99	rm
	Anthracene	ND	1.0	ug/L	12/24/99	rm
	Benzo(b)fluoranthene	ND	0.10	ug/L	12/24/99	rm
	Benzo(k)fluoranthene	ND	0.10	ug/L	12/24/99	rm
	Benzo(a)anthracene	ND	0.10	ug/L	12/24/99	rm
	Benzo(a)pyrene	ND	0.10	ug/L	12/24/99	rm
	Benzo(ghi)perylene	ND	0.10	ug/L	12/24/99	rm
	Chrysene	ND	1.0	ug/L	12/24/99	rm
	Dibenzo(a,h)anthracene	ND	0.10	ug/L	12/24/99	rm
	Fluoranthene	ND	1.0	ug/L	12/24/99	rm
	Fluorene	ND	1.0	ug/L	12/24/99	rm
	Indeno(1,2,3-cd)pyrene	ND	0.10	ug/L	12/24/99	rm
	Naphthalene	ND	5.0	ug/L	12/24/99	rm
	Phenanthrene	<1.0	1.0	ug/L	12/24/99	rm
	Pyrene	<1.0	1.0	ug/L	12/24/99	rm
EPA 8021B	BTEX					
	Benzene	<5.0	5.0	ug/L	12/21/99	weh
	Ethylbenzene	ND	5.0	ug/L	12/21/99	weh
	Toluene	ND	5.0	ug/L	12/21/99	weh
	m&p-Xylenes	ND	10.0	ug/L	12/21/99	weh
	o-Xylene	ND	5.0	ug/L	12/21/99	weh

Committed To *Your* Success

LABORATORY TEST RESULTS

Job Number: 914280 Date: 12/29/1999

CUSTOMER: Marathon Oil Company PROJECT: NP0004490002 ATTN: Mr. Paul Peacock

Customer Sample ID: MW-07
Date Sampled.....: 12/14/1999
Time Sampled.....: 03:30
Sample Matrix.....: Aqueous

Laboratory Sample ID: 914280-6
Date Received.....: 12/16/1999
Time Received.....: 13:37

TEST METHOD	PARAMETER/TEST DESCRIPTION	SAMPLE RESULT	REPORTING LIMIT	UNITS	DATE	TECH
EPA 160.1	Solids, Total Dissolved (TDS)	4000	10	mg/L	12/20/99	lam
EPA 325.2	Chloride	2300	100	mg/L	12/20/99	jdb
EPA 3010	Acid Digestion, Metals (ICP), Diss.	Complete			12/16/99	chh
EPA 3510	Separatory Funnel Liq/Liq Extraction	Complete			12/20/99	bjl
EPA 6010B	Metals Analysis (ICAP)					
	Barium (Ba), Diss.	9.40	0.01	mg/L	12/16/99	pal
	Iron (Fe), Diss.	0.25	0.05	mg/L	12/17/99	chh
	Magnesium (Mg), Diss.	157	0.1	mg/L	12/17/99	chh
EPA 8310	Polynuclear Aromatic Hydrocarbons-HPLC					
	Acenaphthene	ND	5.0	ug/L	12/24/99	rm
	Acenaphthylene	ND	5.0	ug/L	12/24/99	rm
	Anthracene	ND	1.0	ug/L	12/24/99	rm
	Benzo(b)fluoranthene	ND	0.10	ug/L	12/24/99	rm
	Benzo(k)fluoranthene	ND	0.10	ug/L	12/24/99	rm
	Benzo(a)anthracene	ND	0.10	ug/L	12/24/99	rm
	Benzo(a)pyrene	ND	0.10	ug/L	12/24/99	rm
	Benzo(ghi)perylene	ND	0.10	ug/L	12/24/99	rm
	Chrysene	ND	1.0	ug/L	12/24/99	rm
	Dibenzo(a,h)anthracene	ND	0.10	ug/L	12/24/99	rm
	Fluoranthene	ND	1.0	ug/L	12/24/99	rm
	Fluorene	ND	1.0	ug/L	12/24/99	rm
	Indeno(1,2,3-cd)pyrene	ND	0.10	ug/L	12/24/99	rm
	Naphthalene	ND	5.0	ug/L	12/24/99	rm
	Phenanthrene	ND	1.0	ug/L	12/24/99	rm
	Pyrene	<1.0	1.0	ug/L	12/24/99	rm
EPA 8021B	BTEX					
	Benzene	ND	5.0	ug/L	12/22/99	weh
	Ethylbenzene	ND	5.0	ug/L	12/22/99	weh
	Toluene	<5.0	5.0	ug/L	12/22/99	weh
	m&p-Xylenes	<10.0	10.0	ug/L	12/22/99	weh
	o-Xylene	<5.0	5.0	ug/L	12/22/99	weh

Committed To Your Success

LABORATORY TEST RESULTS

Job Number: 914280

Date: 12/29/1999

CUSTOMER: Marathon Oil Company PROJECT: NP0004490002 ATTN: Mr. Paul Peacock

Customer Sample ID: MW-08
Date Sampled.....: 12/14/1999
Time Sampled.....: 04:15
Sample Matrix.....: Aqueous

Laboratory Sample ID: 914280-7
Date Received.....: 12/16/1999
Time Received.....: 13:37

TEST METHOD	PARAMETER/TEST DESCRIPTION	SAMPLE RESULT	REPORTING LIMIT	UNITS	DATE	TECH
EPA 160.1	Solids, Total Dissolved (TDS)	3500	10	mg/L	12/20/99	lam
EPA 325.2	Chloride	2100	100	mg/L	12/20/99	jdb
EPA 3010	Acid Digestion, Metals (ICP), Diss.	Complete			12/16/99	chh
EPA 3510	Separatory Funnel Liq/Liq Extraction	Complete			12/20/99	bjl
EPA 6010B	Metals Analysis (ICAP)					
	Barium (Ba), Diss.	0.26	0.01	mg/L	12/16/99	pal
	Iron (Fe), Diss.	0.17	0.05	mg/L	12/17/99	chh
	Magnesium (Mg), Diss.	113	0.1	mg/L	12/17/99	chh
EPA 8310	Polynuclear Aromatic Hydrocarbons-HPLC					
	Acenaphthene	ND	5.0	ug/L	12/24/99	rm
	Acenaphthylene	ND	5.0	ug/L	12/24/99	rm
	Anthracene	<1.0	1.0	ug/L	12/24/99	rm
	Benzo(b)fluoranthene	0.30	0.10	ug/L	12/24/99	rm
	Benzo(k)fluoranthene	0.42	0.10	ug/L	12/24/99	rm
	Benzo(a)anthracene	0.42	0.10	ug/L	12/24/99	rm
	Benzo(a)pyrene	0.34	0.10	ug/L	12/24/99	rm
	Benzo(ghi)perylene	0.36	0.10	ug/L	12/24/99	rm
	Chrysene	<1.0	1.0	ug/L	12/24/99	rm
	Dibenzo(a,h)anthracene	0.51	0.10	ug/L	12/24/99	rm
	Fluoranthene	ND	1.0	ug/L	12/24/99	rm
	Fluorene	ND	1.0	ug/L	12/24/99	rm
	Indeno(1,2,3-cd)pyrene	0.32	0.10	ug/L	12/24/99	rm
	Naphthalene	ND	5.0	ug/L	12/24/99	rm
	Phenanthrene	ND	1.0	ug/L	12/24/99	rm
	Pyrene	<1.0	1.0	ug/L	12/24/99	rm
EPA 8021B	BTEX					
	Benzene	<5.0	5.0	ug/L	12/21/99	weh
	Ethylbenzene	ND	5.0	ug/L	12/21/99	weh
	Toluene	ND	5.0	ug/L	12/21/99	weh
	m&p-Xylenes	ND	10.0	ug/L	12/21/99	weh
	o-Xylene	ND	5.0	ug/L	12/21/99	weh

Committed To *Your* Success

LABORATORY TEST RESULTS

Job Number: 914280

Date: 12/29/1999

CUSTOMER: Marathon Oil Company PROJECT: NP0004490002 ATTN: Mr. Paul Peacock

Customer Sample ID: MW-09
Date Sampled.....: 12/14/1999
Time Sampled.....: 02:00
Sample Matrix.....: Aqueous

Laboratory Sample ID: 914280-8
Date Received.....: 12/16/1999
Time Received.....: 13:37

TEST METHOD	PARAMETER/TEST DESCRIPTION	SAMPLE RESULT	REPORTING LIMIT	UNITS	DATE	TECH
EPA 160.1	Solids, Total Dissolved (TDS)	2300	10	mg/L	12/20/99	lam
EPA 325.2	Chloride	1000	100	mg/L	12/20/99	jdb
EPA 3010	Acid Digestion, Metals (ICP), Diss.	Complete			12/16/99	chh
EPA 3510	Separatory Funnel Liq/Liq Extraction	Complete			12/20/99	bjl
EPA 6010B	Metals Analysis (ICAP)					
	Barium (Ba), Diss.	0.26	0.01	mg/L	12/16/99	pal
	Iron (Fe), Diss.	<0.05	0.05	mg/L	12/17/99	chh
	Magnesium (Mg), Diss.	79.1	0.1	mg/L	12/17/99	chh
EPA 8310	Polynuclear Aromatic Hydrocarbons-HPLC					
	Acenaphthene	ND	5.0	ug/L	12/24/99	rm
	Acenaphthylene	ND	5.0	ug/L	12/24/99	rm
	Anthracene	ND	1.0	ug/L	12/24/99	rm
	Benzo(b)fluoranthene	0.15	0.10	ug/L	12/24/99	rm
	Benzo(k)fluoranthene	0.17	0.10	ug/L	12/24/99	rm
	Benzo(a)anthracene	0.12	0.10	ug/L	12/24/99	rm
	Benzo(a)pyrene	0.15	0.10	ug/L	12/24/99	rm
	Benzo(ghi)perylene	0.17	0.10	ug/L	12/24/99	rm
	Chrysene	<1.0	1.0	ug/L	12/24/99	rm
	Dibenzo(a,h)anthracene	0.21	0.10	ug/L	12/24/99	rm
	Fluoranthene	ND	1.0	ug/L	12/24/99	rm
	Fluorene	ND	1.0	ug/L	12/24/99	rm
	Indeno(1,2,3-cd)pyrene	0.13	0.10	ug/L	12/24/99	rm
	Naphthalene	ND	5.0	ug/L	12/24/99	rm
	Phenanthrene	ND	1.0	ug/L	12/24/99	rm
	Pyrene	<1.0	1.0	ug/L	12/24/99	rm
EPA 8021B	BTEX					
	Benzene	ND	5.0	ug/L	12/22/99	weh
	Ethylbenzene	ND	5.0	ug/L	12/22/99	weh
	Toluene	ND	5.0	ug/L	12/22/99	weh
	m&p-Xylenes	ND	10.0	ug/L	12/22/99	weh
	o-Xylene	<5.0	5.0	ug/L	12/22/99	weh

Committed To *Your* Success

LABORATORY TEST RESULTS

Job Number: 914280 Date: 12/29/1999

CUSTOMER: Marathon Oil Company PROJECT: NP0004490002 ATTN: Mr. Paul Peacock

Customer Sample ID: MW-11
Date Sampled.....: 12/14/1999
Time Sampled.....: 05:00
Sample Matrix.....: Aqueous

Laboratory Sample ID: 914280-9
Date Received.....: 12/16/1999
Time Received.....: 13:37

TEST METHOD	PARAMETER/TEST DESCRIPTION	SAMPLE RESULT	REPORTING LIMIT	UNITS	DATE	TECH
EPA 160.1	Solids, Total Dissolved (TDS)	2800	10	mg/L	12/20/99	lam
EPA 325.2	Chloride	1500	100	mg/L	12/20/99	jdb
EPA 3010	Acid Digestion, Metals (ICP), Diss.	Complete			12/16/99	chh
EPA 3510	Separatory Funnel Liq/Liq Extraction	Complete			12/20/99	bjl
EPA 6010B	Metals Analysis (ICAP)					
	Barium (Ba), Diss.	0.16	0.01	mg/L	12/16/99	pal
	Iron (Fe), Diss.	<0.05	0.05	mg/L	12/17/99	chh
	Magnesium (Mg), Diss.	98.6	0.1	mg/L	12/17/99	chh
EPA 8310	Polynuclear Aromatic Hydrocarbons-HPLC					
	Acenaphthene	ND	5.0	ug/L	12/24/99	rm
	Acenaphthylene	ND	5.0	ug/L	12/24/99	rm
	Anthracene	ND	1.0	ug/L	12/24/99	rm
	Benzo(b)fluoranthene	ND	0.10	ug/L	12/24/99	rm
	Benzo(k)fluoranthene	ND	0.10	ug/L	12/24/99	rm
	Benzo(a)anthracene	ND	0.10	ug/L	12/24/99	rm
	Benzo(a)pyrene	ND	0.10	ug/L	12/24/99	rm
	Benzo(ghi)perylene	ND	0.10	ug/L	12/24/99	rm
	Chrysene	ND	1.0	ug/L	12/24/99	rm
	Dibenzo(a,h)anthracene	ND	0.10	ug/L	12/24/99	rm
	Fluoranthene	ND	1.0	ug/L	12/24/99	rm
	Fluorene	ND	1.0	ug/L	12/24/99	rm
	Indeno(1,2,3-cd)pyrene	ND	0.10	ug/L	12/24/99	rm
	Naphthalene	ND	5.0	ug/L	12/24/99	rm
	Phenanthrene	ND	1.0	ug/L	12/24/99	rm
	Pyrene	ND	1.0	ug/L	12/24/99	rm
EPA 8021B	BTEX					
	Benzene	ND	5.0	ug/L	12/22/99	weh
	Ethylbenzene	ND	5.0	ug/L	12/22/99	weh
	Toluene	ND	5.0	ug/L	12/22/99	weh
	m&p-Xylenes	ND	10.0	ug/L	12/22/99	weh
	o-Xylene	ND	5.0	ug/L	12/22/99	weh

Committed To *Your* Success

LABORATORY TEST RESULTS

Job Number: 914280

Date: 12/29/1999

CUSTOMER: Marathon Oil Company PROJECT: NP0004490002 ATTN: Mr. Paul Peacock

Customer Sample ID: MW-12
Date Sampled.....: 12/14/1999
Time Sampled.....: 03:00
Sample Matrix.....: Aqueous

Laboratory Sample ID: 914280-10
Date Received.....: 12/16/1999
Time Received.....: 13:37

TEST METHOD	PARAMETER/TEST DESCRIPTION	SAMPLE RESULT	REPORTING LIMIT	UNITS	DATE	TECH
EPA 160.1	Solids, Total Dissolved (TDS)	7300	10	mg/L	12/20/99	lam
EPA 325.2	Chloride	2400	100	mg/L	12/20/99	jdb
EPA 3010	Acid Digestion, Metals (ICP), Diss.	Complete			12/16/99	chh
EPA 3510	Separatory Funnel Liq/Liq Extraction	Complete			12/20/99	bjl
EPA 6010B	Metals Analysis (ICAP)					
	Barium (Ba), Diss.	0.14	0.01	mg/L	12/16/99	pal
	Iron (Fe), Diss.	<0.05	0.05	mg/L	12/17/99	chh
	Magnesium (Mg), Diss.	226	0.1	mg/L	12/17/99	chh
EPA 8310	Polynuclear Aromatic Hydrocarbons-HPLC					
	Acenaphthene	ND	5.0	ug/L	12/24/99	rm
	Acenaphthylene	ND	5.0	ug/L	12/24/99	rm
	Anthracene	ND	1.0	ug/L	12/24/99	rm
	Benzo(b)fluoranthene	ND	0.10	ug/L	12/24/99	rm
	Benzo(k)fluoranthene	ND	0.10	ug/L	12/24/99	rm
	Benzo(a)anthracene	ND	0.10	ug/L	12/24/99	rm
	Benzo(a)pyrene	ND	0.10	ug/L	12/24/99	rm
	Benzo(ghi)perylene	ND	0.10	ug/L	12/24/99	rm
	Chrysene	ND	1.0	ug/L	12/24/99	rm
	Dibenzo(a,h)anthracene	ND	0.10	ug/L	12/24/99	rm
	Fluoranthene	ND	1.0	ug/L	12/24/99	rm
	Fluorene	ND	1.0	ug/L	12/24/99	rm
	Indeno(1,2,3-cd)pyrene	ND	0.10	ug/L	12/24/99	rm
	Naphthalene	ND	5.0	ug/L	12/24/99	rm
	Phenanthrene	ND	1.0	ug/L	12/24/99	rm
	Pyrene	ND	1.0	ug/L	12/24/99	rm
EPA 8021B	BTEX					
	Benzene	ND	5.0	ug/L	12/22/99	weh
	Ethylbenzene	ND	5.0	ug/L	12/22/99	weh
	Toluene	ND	5.0	ug/L	12/22/99	weh
	m&p-Xylenes	ND	10.0	ug/L	12/22/99	weh
	o-Xylene	ND	5.0	ug/L	12/22/99	weh

Committed To *Your* Success

LABORATORY TEST RESULTS

Job Number: 914280

Date: 12/29/1999

CUSTOMER: Marathon Oil Company PROJECT: NP0004490002 ATTN: Mr. Paul Peacock

Customer Sample ID: MW-13
Date Sampled.....: 12/14/1999
Time Sampled.....: 01:00
Sample Matrix.....: Aqueous

Laboratory Sample ID: 914280-11
Date Received.....: 12/16/1999
Time Received.....: 13:37

TEST METHOD	PARAMETER/TEST DESCRIPTION	SAMPLE RESULT	REPORTING LIMIT	UNITS	DATE	TECH
EPA 160.1	Solids, Total Dissolved (TDS)	3500	10	mg/L	12/20/99	lam
EPA 325.2	Chloride	1900	100	mg/L	12/20/99	jdb
EPA 3010	Acid Digestion, Metals (ICP), Diss.	Complete			12/16/99	chh
EPA 3510	Separatory Funnel Liq/Liq Extraction	Complete			12/20/99	bjl
EPA 6010B	Metals Analysis (ICAP)					
	Barium (Ba), Diss.	0.13	0.01	mg/L	12/16/99	pal
	Iron (Fe), Diss.	<0.05	0.05	mg/L	12/17/99	chh
	Magnesium (Mg), Diss.	152	0.1	mg/L	12/17/99	chh
EPA 8310	Polynuclear Aromatic Hydrocarbons-HPLC					
	Acenaphthene	ND	5.0	ug/L	12/24/99	rm
	Acenaphthylene	ND	5.0	ug/L	12/24/99	rm
	Anthracene	ND	1.0	ug/L	12/24/99	rm
	Benzo(b)fluoranthene	ND	0.10	ug/L	12/24/99	rm
	Benzo(k)fluoranthene	ND	0.10	ug/L	12/24/99	rm
	Benzo(a)anthracene	ND	0.10	ug/L	12/24/99	rm
	Benzo(a)pyrene	ND	0.10	ug/L	12/24/99	rm
	Benzo(ghi)perylene	ND	0.10	ug/L	12/24/99	rm
	Chrysene	ND	1.0	ug/L	12/24/99	rm
	Dibenzo(a,h)anthracene	ND	0.10	ug/L	12/24/99	rm
	Fluoranthene	ND	1.0	ug/L	12/24/99	rm
	Fluorene	ND	1.0	ug/L	12/24/99	rm
	Indeno(1,2,3-cd)pyrene	ND	0.10	ug/L	12/24/99	rm
	Naphthalene	ND	5.0	ug/L	12/24/99	rm
	Phenanthrene	ND	1.0	ug/L	12/24/99	rm
	Pyrene	ND	1.0	ug/L	12/24/99	rm
EPA 8021B	BTEX					
	Benzene	<5.0	5.0	ug/L	12/22/99	weh
	Ethylbenzene	ND	5.0	ug/L	12/22/99	weh
	Toluene	ND	5.0	ug/L	12/22/99	weh
	m&p-Xylenes	ND	10.0	ug/L	12/22/99	weh
	o-Xylene	ND	5.0	ug/L	12/22/99	weh

Committed To *Your* Success

LABORATORY TEST RESULTS

Job Number: 914280

Date: 12/29/1999

CUSTOMER: Marathon Oil Company PROJECT: NP0004490002 ATTN: Mr. Paul Peacock

Customer Sample ID: DUP-1
Date Sampled.....: 12/14/1999
Time Sampled.....: 00:00
Sample Matrix.....: Aqueous

Laboratory Sample ID: 914280-12
Date Received.....: 12/16/1999
Time Received.....: 13:37

TEST METHOD	PARAMETER/TEST DESCRIPTION	SAMPLE RESULT	REPORTING LIMIT	UNITS	DATE	TECH
EPA 160.1	Solids, Total Dissolved (TDS)	2400	10	mg/L	12/20/99	lam
EPA 325.2	Chloride	1200	200	mg/L	12/20/99	jdb
EPA 3010	Acid Digestion, Metals (ICP), Diss.	Complete			12/16/99	chh
EPA 3510	Separatory Funnel Liq/Liq Extraction	Complete			12/20/99	bjl
EPA 6010B	Metals Analysis (ICAP)					
	Barium (Ba), Diss.	0.14	0.01	mg/L	12/16/99	pal
	Iron (Fe), Diss.	0.12	0.05	mg/L	12/17/99	chh
	Magnesium (Mg), Diss.	79.9	0.1	mg/L	12/17/99	chh
EPA 8310	Polynuclear Aromatic Hydrocarbons-HPLC					
	Acenaphthene	ND	5.0	ug/L	12/24/99	rm
	Acenaphthylene	ND	5.0	ug/L	12/24/99	rm
	Anthracene	ND	1.0	ug/L	12/24/99	rm
	Benzo(b)fluoranthene	ND	0.10	ug/L	12/24/99	rm
	Benzo(k)fluoranthene	ND	0.10	ug/L	12/24/99	rm
	Benzo(a)anthracene	ND	0.10	ug/L	12/24/99	rm
	Benzo(a)pyrene	ND	0.10	ug/L	12/24/99	rm
	Benzo(ghi)perylene	ND	0.10	ug/L	12/24/99	rm
	Chrysene	ND	1.0	ug/L	12/24/99	rm
	Dibenzo(a,h)anthracene	ND	0.10	ug/L	12/24/99	rm
	Fluoranthene	ND	1.0	ug/L	12/24/99	rm
	Fluorene	ND	1.0	ug/L	12/24/99	rm
	Indeno(1,2,3-cd)pyrene	ND	0.10	ug/L	12/24/99	rm
	Naphthalene	ND	5.0	ug/L	12/24/99	rm
	Phenanthrene	ND	1.0	ug/L	12/24/99	rm
	Pyrene	ND	1.0	ug/L	12/24/99	rm
EPA 8021B	BTEX					
	Benzene	ND	5.0	ug/L	12/22/99	weh
	Ethylbenzene	ND	5.0	ug/L	12/22/99	weh
	Toluene	ND	5.0	ug/L	12/22/99	weh
	m&p-Xylenes	ND	10.0	ug/L	12/22/99	weh
	o-Xylene	<5.0	5.0	ug/L	12/22/99	weh

Committed To *Your* Success

LABORATORY TEST RESULTS

Job Number: 914280

Date: 12/29/1999

CUSTOMER: Marathon Oil Company PROJECT: NP0004490002 ATTN: Mr. Paul Peacock

Customer Sample ID: FB-1
Date Sampled.....: 12/15/1999
Time Sampled.....: 08:30
Sample Matrix.....: Aqueous

Laboratory Sample ID: 914280-13
Date Received.....: 12/16/1999
Time Received.....: 13:37

TEST METHOD	PARAMETER/TEST DESCRIPTION	SAMPLE RESULT	REPORTING LIMIT	UNITS	DATE	TECH
EPA 8021B	BTEX					
	Benzene	ND	5.0	ug/L	12/22/99	weh
	Ethylbenzene	ND	5.0	ug/L	12/22/99	weh
	Toluene	ND	5.0	ug/L	12/22/99	weh
	m&p-Xylenes	ND	10.0	ug/L	12/22/99	weh
	o-Xylene	ND	5.0	ug/L	12/22/99	weh

Committed To *Your* Success

LABORATORY TEST RESULTS

Job Number: 914280

Date: 12/29/1999

CUSTOMER: Marathon Oil Company | PROJECT: NP0004490002 | ATTN: Mr. Paul Peacock

Customer Sample ID: TRIP BLANK
Date Sampled.....: 12/15/1999
Time Sampled.....: 00:00
Sample Matrix.....: Aqueous

Laboratory Sample ID: 914280-14
Date Received.....: 12/16/1999
Time Received.....: 13:37

TEST METHOD	PARAMETER/TEST DESCRIPTION	SAMPLE RESULT	REPORTING LIMIT	UNITS	DATE	TECH
EPA 8021B	BTEX					
	Benzene	ND	5.0	ug/L	12/20/99	weh
	Ethylbenzene	ND	5.0	ug/L	12/20/99	weh
	Toluene	ND	5.0	ug/L	12/20/99	weh
	m&p-Xylenes	ND	10.0	ug/L	12/20/99	weh
	o-Xylene	ND	5.0	ug/L	12/20/99	weh

Committed To *Your* Success

QUALITY CONTROL RESULTS

Job Number.: 914280 | Report Date.: 12/29/1999

CUSTOMER: Marathon Oil Company | PROJECT: MOC - Bertha Barber | ATTN: Mr. Paul Peacock

Test Method.....: EPA 325.2 | Batch.....: 51161 | Analyst...: jdb
Method Description.: Chloride (Colorimetric) | Units.....: mg/L | Test Code.: CHL
Parameter.....: Chloride

QC	Lab ID	Reagent	QC Result	QC Result	True Value	Orig. Value	Calc. Result	*	Limits	Date	Time
ICV		V199264H	21.16		20		105.8	%	85-115	12/20/1999	1533
ICB			0.02							12/20/1999	1535
MD	914260-4		27.62			27.53	0.3	R	20	12/20/1999	1544
CCV		V199264H	20.96		20		104.8	%	85-115	12/20/1999	1547
CCB			0.07							12/20/1999	1549
CCV		V199264H	21.20		20		106.0	%	85-115	12/20/1999	1553
CCB			0.12							12/20/1999	1555
CCV		V199264H	21.20		20		106.0	%	85-115	12/20/1999	1556
CCB			0.14							12/20/1999	1558
MS	914260-44	V01019106	34.92		20.000000	13.76	105.8	%	75-125	12/20/1999	1602
CCV		V199264H	21.33		20		106.7	%	85-115	12/20/1999	1620
CCB			0.05							12/20/1999	1622
CCV		V199264H	21.15		20		105.8	%	85-115	12/20/1999	1632
CCB			0.14							12/20/1999	1634

Test Method.....: EPA 325.2 | Batch.....: 51162 | Analyst...: jdb
Method Description.: Chloride (Colorimetric) | Units.....: mg/L | Test Code.: CHL
Parameter.....: Chloride

QC	Lab ID	Reagent	QC Result	QC Result	True Value	Orig. Value	Calc. Result	*	Limits	Date	Time
ICV		V199264H	20.92		20		104.6	%	85-115	12/20/1999	1701
ICB			0.02							12/20/1999	1702
MD	914354-4		34.85			34.82	0.1	R	20	12/20/1999	1707
MS	914354-44	V01019106	37.66		20.000000	17.41	101.2	%	75-125	12/20/1999	1709
CCV		V199264H	21.62		20		108.1	%	85-115	12/20/1999	1710
CCB			0.14							12/20/1999	1711
CCV		V199264H	21.33		20		106.7	%	85-115	12/20/1999	1714
CCB			0.11							12/20/1999	1715

Test Method.....: EPA 160.1 | Batch.....: 51204 | Analyst...: lam
Method Description.: Solids, Total Dissolved (TDS) | Units.....: mg/L | Test Code.: TDS
Parameter.....: Solids, Total Dissolved (TDS)

QC	Lab ID	Reagent	QC Result	QC Result	True Value	Orig. Value	Calc. Result	*	Limits	Date	Time
MB			0.0							12/20/1999	1000
LCS		V23026E	9941.0		10000		99.4	%	80-120	12/20/1999	1003
MS	914176-1	V23026E	2203.0		500.000000	1711.0	98.4	%	75-125	12/20/1999	1008
MD	914176-1		1788.0			1711.0	4.4	R	20	12/20/1999	1010

Test Method.....: EPA 6010B | Batch.....: 50956 | Analyst...: pal
Method Description.: Metals Analysis (ICAP) | Units.....: mg/L | Test Code.: BA
Parameter.....: Barium (Ba)

QC	Lab ID	Reagent	QC Result	QC Result	True Value	Orig. Value	Calc. Result	*	Limits	Date	Time
CAL		ICPCALBLK	-0.00090		0.00					12/16/1999	2109
CAL		ICPCALSTD	1.12229		1.00					12/16/1999	2117
ICV		V211211F	1.95156		2.00		97.6	%	90-110	12/16/1999	2132

* %=% REC, R=RPD, A=ABS Diff., D=% Diff.

Committed To *Your* Success

QUALITY CONTROL RESULTS

Job Number.: 914280 | Report Date.: 12/29/1999

CUSTOMER: Marathon Oil Company | PROJECT: MOC - Bertha Barber | ATTN: Mr. Paul Peacock

Test Method.....: EPA 6010B | Batch.....: 50956 | Analyst...: pal
Method Description.: Metals Analysis (ICAP) | Units.....: mg/L | Test Code.: BA
Parameter.....: Barium (Ba)

QC	Lab ID	Reagent	QC Result	QC Result	True Value	Orig. Value	Calc. Result	*	Limits	Date	Time
ICB			0.00080							12/16/1999	2137
ISB		V211211E	0.48103		0.50		96.2	%	80-120	12/16/1999	2141
MD	914290-1		0.04914			0.05172	0.00258	A	0.01000	12/16/1999	2150
MS	914290-1	V16008208	2.29709		2.000000	0.05172	112.3	%	75-125	12/16/1999	2154
CCV		V211211F	1.83351		2.00		91.7	%	90-110	12/16/1999	2229
CCB			0.00089							12/16/1999	2233
ISB		V211211E	0.45370		0.50		90.7	%	80-120	12/16/1999	2321
CCV		V211211F	1.83680		2.00		91.8	%	90-110	12/16/1999	2332
CCB			0.00089							12/16/1999	2336

Test Method.....: EPA 6010B | Batch.....: 51014 | Analyst...: chh
Method Description.: Metals Analysis (ICAP) | Units.....: mg/L | Test Code.: FE
Parameter.....: Iron (Fe)

QC	Lab ID	Reagent	QC Result	QC Result	True Value	Orig. Value	Calc. Result	*	Limits	Date	Time
ICV		V211211F	1.97486		2.00		98.7	%	90-110	12/17/1999	1231
ICB			-0.00027							12/17/1999	1236
ISB		V211211E	180.83746		200.0		90.4	%	80-120	12/17/1999	1240
MD	914290-1		0.02148			0.02851	0.00703	A	0.05000	12/17/1999	1253
MS	914290-1	V16008208	1.73574		2.000000	0.02851	85.4	%	75-125	12/17/1999	1258
CCV		V211211F	1.87765		2.00		93.9	%	90-110	12/17/1999	1332
CCB			-0.00110							12/17/1999	1337
ISB		V211211E	172.10363		200.0		86.1	%	80-120	12/17/1999	1436
CCV		V211211F	1.91981		2.00		96.0	%	90-110	12/17/1999	1447
CCB			0.00454							12/17/1999	1451

Test Method.....: EPA 6010B | Batch.....: 51014 | Analyst...: chh
Method Description.: Metals Analysis (ICAP) | Units.....: mg/L | Test Code.: MG
Parameter.....: Magnesium (Mg)

QC	Lab ID	Reagent	QC Result	QC Result	True Value	Orig. Value	Calc. Result	*	Limits	Date	Time
ICV		V211211F	1.89033		2.00		94.5	%	90-110	12/17/1999	1231
ICB			0.01103							12/17/1999	1236
ISB		V211211E	469.67510		500.0		93.9	%	80-120	12/17/1999	1240
MD	914290-1		19.53897			20.03454	2.5	R	20	12/17/1999	1253
MS	914290-1	V16008208	20.48425		2.000000	20.03454	22.5	%	75-125	12/17/1999	1258
CCV		V211211F	1.86883		2.00		93.4	%	90-110	12/17/1999	1332
CCB			0.00001							12/17/1999	1337
ISB		V211211E	444.96072		500.0		89.0	%	80-120	12/17/1999	1436
CCV		V211211F	1.81744		2.00		90.9	%	90-110	12/17/1999	1447
CCB			-0.00734							12/17/1999	1451

* %=% REC, R=RPD, A=ABS Diff., D=% Diff.

Committed To Your Success

QUALITY CONTROL RESULTS

Job Number.: 914280 Report Date.: 12/29/1999

CUSTOMER: Marathon Oil Company PROJECT: MOC - Bertha Barber ATTN: Mr. Paul Peacock

QC Type	Description	Reag. Code	Lab ID	Dilution Factor	Date	Time

Test Method.....: EPA 8310 Batch.....: 51476 Analyst...: rm
Method Description.: Polynuclear Aromatic Hydrocarbons-HPLC Units.....: ug/L

MB	Method Blank					12/23/1999 2312

Parameter/Test Description	QC Result	QC Result	True Value	Orig. Value	Calc. Result	*	Limits
Acenaphthene	ND						
Acenaphthylene	ND						
Anthracene	ND						
Benzo(b)fluoranthene	ND						
Benzo(k)fluoranthene	ND						
Benzo(a)anthracene	ND						
Benzo(a)pyrene	ND						
Benzo(ghi)perylene	ND						
Chrysene	ND						
Dibenzo(a,h)anthracene	ND						
Fluoranthene	ND						
Fluorene	ND						
Indeno(1,2,3-cd)pyrene	ND						
Naphthalene	ND						
Phenanthrene	ND						
Pyrene	ND						

LCS	Laboratory Control Sample	V173728B				12/23/1999 2350

Parameter/Test Description	QC Result	QC Result	True Value	Orig. Value	Calc. Result	*	Limits
Acenaphthene	290.59		1000.000000		29.1	%	10-92
Acenaphthylene	633.57		1000.000000		63.4	%	11-127
Anthracene	525.86		1002.000000		52.5	%	13-110
Benzo(b)fluoranthene	353.73		500.000000		70.7	%	57-102
Benzo(k)fluoranthene	313.49		500.000000		62.7	%	59-107
Benzo(a)anthracene	310.47		500.000000		62.1	%	61-109
Benzo(a)pyrene	304.86		500.000000		61.0	%	42-131
Benzo(ghi)perylene	311.28		500.000000		62.3	%	55-119
Chrysene	357.31		500.000000		71.5	%	59-103
Dibenzo(a,h)anthracene	334.72		500.000000		66.9	%	63-108
Fluoranthene	360.53		500.000000		72.1	%	40-122
Fluorene	411.29		1000.000000		41.1	%	20-95
Indeno(1,2,3-cd)pyrene	306.27		500.000000		61.3	%	57-104
Naphthalene	322.58		1000.000000		32.3	%	10-82
Phenanthrene	248.50		502.500000		49.5	%	37-102
Pyrene	328.55		500.000000		65.7	%	59-111

MS	Matrix Spike	V173728B	914280-1		12/24/1999 0107

Parameter/Test Description	QC Result	QC Result	True Value	Orig. Value	Calc. Result	*	Limits
Acenaphthene	499.36		1000.000000	ND	49.9	%	10-92
Acenaphthylene	466.67		1000.000000	ND	46.7	%	11-127
Anthracene	593.73		1002.000000	ND	59.3	%	33-110
Benzo(b)fluoranthene	304.24		500.000000	ND	60.8	%	57-102
Benzo(k)fluoranthene	317.15		500.000000	ND	63.4	%	59-107
Benzo(a)anthracene	316.57		500.000000	ND	63.3	%	61-109

 * %=% REC, R=RPD, A=ABS Diff., D=% Diff.

Committed To *Your* Success

QUALITY CONTROL RESULTS

Job Number.: 914280

Report Date.: 12/29/1999

CUSTOMER: Marathon Oil Company | PROJECT: MOC - Bertha Barber | ATTN: Mr. Paul Peacock

QC Type	Description	Reag. Code	Lab ID	Dilution Factor	Date	Time
MS	Matrix Spike	V173728B	914280-1		12/24/1999	0107

Parameter/Test Description	QC Result	QC Result	True Value	Orig. Value	Calc. Result	*	Limits
enzo(a)pyrene	312.05		500.000000	13.80	59.6	%	42-131
enzo(ghi)perylene	327.16		500.000000	ND	65.4	%	55-119
Chrysene	300.89		500.000000	ND	60.2	%	59-103
ibenzo(a,h)anthracene	340.91		500.000000	ND	68.2	%	63-108
luoranthene	391.56		500.000000	ND	78.3	%	40-122
luorene	518.29		1000.000000	ND	51.8	%	20-95
ndeno(1,2,3-cd)pyrene	367.35		500.000000	ND	73.5	%	57-104
Naphthalene	360.39		1000.000000	ND	36.0	%	10-82
henanthrene	285.17		502.500000	ND	56.8	%	37-102
yrene	318.56		500.000000	ND	63.7	%	59-111

MSD	Matrix Spike Duplicate	V173728B	914280-1		12/24/1999	0145

Parameter/Test Description	QC Result	QC Result	True Value	Orig. Value	Calc. Result	*	Limits
Acenaphthene	422.69	499.36	1000.000000	ND	42.3	%	10-92
					16.6	R	30
cenaphthylene	621.10	466.67	1000.000000	ND	62.1	%	11-127
					28.4	R	30
Anthracene	574.14	593.73	1002.000000	ND	57.3	%	33-110
					3.4	R	30
enzo(b)fluoranthene	346.34	304.24	500.000000	ND	69.3	%	57-102
					12.9	R	30
Benzo(k)fluoranthene	329.00	317.15	500.000000	ND	65.8	%	59-107
					3.7	R	30
enzo(a)anthracene	319.73	316.57	500.000000	ND	63.9	%	61-109
					1.0	R	30
enzo(a)pyrene	309.78	312.05	500.000000	13.80	59.2	%	42-131
					0.7	R	30
Benzo(ghi)perylene	327.98	327.16	500.000000	ND	65.6	%	55-119
					0.3	R	30
Chrysene	307.85	300.89	500.000000	ND	61.6	%	59-103
					2.3	R	30
Dibenzo(a,h)anthracene	353.30	340.91	500.000000	ND	70.7	%	63-108
					3.6	R	30
Fluoranthene	596.07	391.56	500.000000	ND	119.2	%	40-122
					41.4	R	30
Fluorene	453.86	518.29	1000.000000	ND	45.4	%	20-95
					13.3	R	30
Indeno(1,2,3-cd)pyrene	331.77	367.35	500.000000	ND	66.4	%	57-104
					10.2	R	30
Naphthalene	293.04	360.39	1000.000000	ND	29.3	%	10-82
					20.6	R	30
Phenanthrene	284.43	285.17	502.500000	ND	56.6	%	37-102
					0.3	R	30
Pyrene	335.16	318.56	500.000000	ND	67.0	%	59-111
					5.1	R	30

* %=% REC, R=RPD, A=ABS Diff., D=% Diff.

Committed To *Your* Success

QUALITY CONTROL RESULTS

Job Number.: 914280

Report Date.: 12/29/1999

CUSTOMER: Marathon Oil Company | PROJECT: MOC - Bertha Barber | ATTN: Mr. Paul Peacock

QC Type	Description	Reag. Code	Lab ID	Dilution Factor	Date	Time

Test Method.....: EPA 8021B
Method Description.: BTEX

Batch.....: 51154
Units.....: ug/L

Analyst...: weh

LCS	Laboratory Control Sample	8020MS1			12/20/1999	0902

Parameter/Test Description	QC Result	QC Result	True Value	Orig. Value	Calc. Result	*	Limits
Benzene	52.351		50		104.7	%	70-130
Ethylbenzene	49.61		50		99.2	%	70-130
Toluene	50.61		50		101.2	%	70-130
m&p-Xylenes	95.71		100		95.7	%	70-130
o-Xylene	48.64		50		97.3	%	70-130

MB	Method Blank				12/20/1999	0936

Parameter/Test Description	QC Result	QC Result	True Value	Orig. Value	Calc. Result	*	Limits
Benzene	ND						
Ethylbenzene	ND						
Toluene	ND						
m&p-Xylenes	ND						
o-Xylene	ND						

MS	Matrix Spike	8020MS1	914279-2		12/20/1999	1054

Parameter/Test Description	QC Result	QC Result	True Value	Orig. Value	Calc. Result	*	Limits
Benzene	54.834		50	1.563	106.5	%	70-130
Ethylbenzene	49.33		50	2.56	93.5	%	70-130
Toluene	53.57		50	1.84	103.5	%	70-130
m&p-Xylenes	92.05		100	2.30	89.8	%	70-130
o-Xylene	45.29		50	ND	90.6	%	70-130

MSD	Matrix Spike Duplicate	8020MS1	914279-2		12/20/1999	1128

Parameter/Test Description	QC Result	QC Result	True Value	Orig. Value	Calc. Result	*	Limits
Benzene	50.087	54.834	50	1.563	97.0	%	70-130
					9.0	R	25
Ethylbenzene	48.11	49.33	50	2.56	91.1	%	70-130
					2.5	R	25
Toluene	48.40	53.57	50	1.84	93.1	%	70-130
					10.1	R	25
m&p-Xylenes	90.78	92.05	100	2.30	88.5	%	70-130
					1.4	R	25
o-Xylene	44.76	45.29	50	ND	89.5	%	70-130
					1.2	R	25

* %=% REC, R=RPD, A=ABS Diff., D=% Diff.

Committed To *Your* Success

QUALITY CONTROL RESULTS

Job Number.: 914280

Report Date.: 12/29/1999

CUSTOMER: Marathon Oil Company PROJECT: MOC - Bertha Barber ATTN: Mr. Paul Peacock

QC Type	Description	Reag. Code	Lab ID	Dilution Factor	Date	Time
LCS	Laboratory Control Sample	8020MS1			12/20/1999	2034

Parameter/Test Description	QC Result	QC Result	True Value	Orig. Value	Calc. Result	*	Limits
Benzene	50.055		50		100.1	%	70-130
Ethylbenzene	46.25		50		92.5	%	70-130
Toluene	47.26		50		94.5	%	70-130
m&p-Xylenes	89.53		100		89.5	%	70-130
o-Xylene	45.45		50		90.9	%	70-130

QC Type	Description	Reag. Code	Lab ID	Dilution Factor	Date	Time
MB	Method Blank				12/20/1999	2108

Parameter/Test Description	QC Result	QC Result	True Value	Orig. Value	Calc. Result	*	Limits
Benzene	ND						
Ethylbenzene	ND						
Toluene	ND						
m&p-Xylenes	ND						
o-Xylene	ND						

QC Type	Description	Reag. Code	Lab ID	Dilution Factor	Date	Time
MS	Matrix Spike	8020MS1	914279-8		12/20/1999	2249

Parameter/Test Description	QC Result	QC Result	True Value	Orig. Value	Calc. Result	*	Limits
Benzene	49.958		50	ND	99.9	%	70-130
Ethylbenzene	46.03		50	ND	92.1	%	70-130
Toluene	47.57		50	ND	95.1	%	70-130
m&p-Xylenes	89.08		100	ND	89.1	%	70-130
o-Xylene	45.24		50	ND	90.5	%	70-130

QC Type	Description	Reag. Code	Lab ID	Dilution Factor	Date	Time
MSD	Matrix Spike Duplicate	8020MS1	914279-8		12/20/1999	2323

Parameter/Test Description	QC Result	QC Result	True Value	Orig. Value	Calc. Result	*	Limits
Benzene	50.207	49.958	50	ND	100.4	%	70-130
					0.5	R	25
Ethylbenzene	45.89	46.03	50	ND	91.8	%	70-130
					0.3	R	25
Toluene	47.37	47.57	50	ND	94.7	%	70-130
					0.4	R	25
m&p-Xylenes	88.79	89.08	100	ND	88.8	%	70-130
					0.3	R	25
o-Xylene	45.20	45.24	50	ND	90.4	%	70-130
					0.1	R	25

QC Type	Description	Reag. Code	Lab ID	Dilution Factor	Date	Time
LCS	Laboratory Control Sample	8020MS1			12/21/1999	0426

Parameter/Test Description	QC Result	QC Result	True Value	Orig. Value	Calc. Result	*	Limits
Benzene	50.959		50		101.9	%	70-130
Ethylbenzene	47.66		50		95.3	%	70-130
Toluene	48.66		50		97.3	%	70-130
m&p-Xylenes	91.87		100		91.9	%	70-130
o-Xylene	46.88		50		93.8	%	70-130

* %=% REC, R=RPD, A=ABS Diff., D=% Diff.

Committed To *Your* Success

QUALITY CONTROL RESULTS

Job Number.: 914280

Report Date.: 12/29/1999

CUSTOMER: Marathon Oil Company | PROJECT: MOC - Bertha Barber | ATTN: Mr. Paul Peacock

QC Type	Description	Reag. Code	Lab ID	Dilution Factor	Date	Time

Test Method.....: EPA 8021B
Method Description.: BTEX

Batch.....: 51210
Units.....: ug/L

Analyst...: weh

LCS	Laboratory Control Sample	8020MS1			12/21/1999	1352

Parameter/Test Description	QC Result	QC Result	True Value	Orig. Value	Calc. Result	*	Limits
Benzene	50.705		50		101.4	%	70-130
Ethylbenzene	46.86		50		93.7	%	70-130
Toluene	48.90		50		97.8	%	70-130
m&p-Xylenes	90.36		100		90.4	%	70-130
o-Xylene	45.96		50		91.9	%	70-130

MB	Method Blank				12/21/1999	1426

Parameter/Test Description	QC Result	QC Result	True Value	Orig. Value	Calc. Result	*	Limits
Benzene	ND						
Ethylbenzene	ND						
Toluene	ND						
m&p-Xylenes	ND						
o-Xylene	ND						

MS	Matrix Spike	8020MS1	914327-6		12/21/1999	1825

Parameter/Test Description	QC Result	QC Result	True Value	Orig. Value	Calc. Result	*	Limits
Benzene	235.404		50	192.952	84.9	%	70-130
Ethylbenzene	46.73		50	ND	93.5	%	70-130
Toluene	76.16		50	31.58	89.2	%	70-130
m&p-Xylenes	97.17		100	ND	97.2	%	70-130
o-Xylene	52.01		50	ND	104.0	%	70-130

MSD	Matrix Spike Duplicate	8020MS1	914327-6		12/21/1999	1859

Parameter/Test Description	QC Result	QC Result	True Value	Orig. Value	Calc. Result	*	Limits
Benzene	239.800	235.404	50	192.952	93.7	%	70-130
					1.9	R	25
Ethylbenzene	46.85	46.73	50	ND	93.7	%	70-130
					0.3	R	25
Toluene	78.05	76.16	50	31.58	92.9	%	70-130
					2.5	R	25
m&p-Xylenes	96.56	97.17	100	ND	96.6	%	70-130
					0.6	R	25
o-Xylene	51.64	52.01	50	ND	103.3	%	70-130
					0.7	R	25

* %=% REC, R=RPD, A=ABS Diff., D=% Diff.

Committed To *Your* Success

QUALITY CONTROL RESULTS

Job Number.: 914280

Report Date.: 12/29/1999

CUSTOMER: Marathon Oil Company | PROJECT: MOC - Bertha Barber | ATTN: Mr. Paul Peacock

QC Type	Description	Reag. Code	Lab ID	Dilution Factor	Date	Time
LCS	Laboratory Control Sample	8020MS1			12/21/1999	2150

Parameter/Test Description	QC Result	QC Result	True Value	Orig. Value	Calc. Result	*	Limits
enzene	51.937		50		103.9	%	70-130
thylbenzene	48.15		50		96.3	%	70-130
Toluene	49.46		50		98.9	%	70-130
m&p-Xylenes	93.21		100		93.2	%	70-130
-Xylene	47.44		50		94.9	%	70-130

QC Type	Description	Reag. Code	Lab ID	Dilution Factor	Date	Time
MB	Method Blank				12/21/1999	2224

Parameter/Test Description	QC Result	QC Result	True Value	Orig. Value	Calc. Result	*	Limits
Benzene	ND						
Ethylbenzene	ND						
oluene	ND						
&p-Xylenes	ND						
o-Xylene	ND						

QC Type	Description	Reag. Code	Lab ID	Dilution Factor	Date	Time
MS	Matrix Spike	8020MS1	914280-7		12/21/1999	2332

Parameter/Test Description	QC Result	QC Result	True Value	Orig. Value	Calc. Result	*	Limits
enzene	51.282		50	1.605	99.4	%	70-130
thylbenzene	46.61		50	ND	93.2	%	70-130
oluene	47.96		50	ND	95.9	%	70-130
m&p-Xylenes	90.54		100	ND	90.5	%	70-130
-Xylene	45.93		50	ND	91.9	%	70-130

QC Type	Description	Reag. Code	Lab ID	Dilution Factor	Date	Time
MSD	Matrix Spike Duplicate	8020MS1	914280-7		12/22/1999	0006

Parameter/Test Description	QC Result	QC Result	True Value	Orig. Value	Calc. Result	*	Limits
Benzene	51.191	51.282	50	1.605	99.2	%	70-130
					0.2	R	25
thylbenzene	46.58	46.61	50	ND	93.2	%	70-130
					0.1	R	25
oluene	47.79	47.96	50	ND	95.6	%	70-130
					0.4	R	25
m&p-Xylenes	90.46	90.54	100	ND	90.5	%	70-130
					0.1	R	25
-Xylene	45.84	45.93	50	ND	91.7	%	70-130
					0.2	R	25

QC Type	Description	Reag. Code	Lab ID	Dilution Factor	Date	Time
LCS	Laboratory Control Sample	8020MS1			12/22/1999	0548

Parameter/Test Description	QC Result	QC Result	True Value	Orig. Value	Calc. Result	*	Limits
Benzene	50.910		50		101.8	%	70-130
Ethylbenzene	46.06		50		92.1	%	70-130
Toluene	48.71		50		97.4	%	70-130
m&p-Xylenes	89.01		100		89.0	%	70-130
o-Xylene	45.24		50		90.5	%	70-130

* %=% REC, R=RPD, A=ABS Diff., D=% Diff.

Committed To *Your* Success

QUALITY CONTROL RESULTS

Job Number.: 914280

Report Date.: 12/29/1999

CUSTOMER: Marathon Oil Company | PROJECT: MOC - Bertha Barber | ATTN: Mr. Paul Peacock

QC Type	Description	Reag. Code	Lab ID	Dilution Factor	Date	Time

Test Method.....: EPA 8021B
Method Description.: BTEX

Batch.....: 51266
Units.....: ug/L

Analyst...: weh

LCS	Laboratory Control Sample	8020MS1			12/22/1999	1020

Parameter/Test Description	QC Result	QC Result	True Value	Orig. Value	Calc. Result	*	Limits
Benzene	48.448		50		96.9	%	70-130
Ethylbenzene	45.96		50		91.9	%	70-130
Toluene	46.97		50		93.9	%	70-130
m&p-Xylenes	88.77		100		88.8	%	70-130
o-Xylene	45.07		50		90.1	%	70-130

MB	Method Blank				12/22/1999	1056

Parameter/Test Description	QC Result	QC Result	True Value	Orig. Value	Calc. Result	*	Limits
Benzene	ND						
Ethylbenzene	ND						
Toluene	ND						
m&p-Xylenes	ND						
o-Xylene	ND						

MS	Matrix Spike	8020MS1	914280-13		12/22/1999	1244

Parameter/Test Description	QC Result	QC Result	True Value	Orig. Value	Calc. Result	*	Limits
Benzene	47.641		50	ND	95.3	%	70-130
Ethylbenzene	44.52		50	ND	89.0	%	70-130
Toluene	47.09		50	ND	94.2	%	70-130
m&p-Xylenes	86.07		100	ND	86.1	%	70-130
o-Xylene	43.48		50	ND	87.0	%	70-130

MSD	Matrix Spike Duplicate	8020MS1	914280-13		12/22/1999	1320

Parameter/Test Description	QC Result	QC Result	True Value	Orig. Value	Calc. Result	*	Limits
Benzene	48.581	47.641	50	ND	97.2	%	70-130
					2.0	R	25
Ethylbenzene	46.08	44.52	50	ND	92.2	%	70-130
					3.4	R	25
Toluene	47.21	47.09	50	ND	94.4	%	70-130
					0.3	R	25
m&p-Xylenes	88.94	86.07	100	ND	88.9	%	70-130
					3.3	R	25
o-Xylene	45.22	43.48	50	ND	90.4	%	70-130
					3.9	R	25

* %=% REC, R=RPD, A=ABS Diff., D=% Diff.

Committed To *Your* Success

QUALITY CONTROL RESULTS

Job Number.: 914280

Report Date.: 12/29/1999

CUSTOMER: Marathon Oil Company | PROJECT: MOC - Bertha Barber | ATTN: Mr. Paul Peacock

QC Type	Description	Reag. Code	Lab ID	Dilution Factor	Date	Time
LCS	Laboratory Control Sample	8020MS1			12/22/1999	1842

Parameter/Test Description	QC Result	QC Result	True Value	Orig. Value	Calc. Result	*	Limits
Benzene	48.951		50		97.9	%	70-130
Ethylbenzene	45.95		50		91.9	%	70-130
Toluene	47.03		50		94.1	%	70-130
m&p-Xylenes	89.17		100		89.2	%	70-130
o-Xylene	45.17		50		90.3	%	70-130

* %=% REC, R=RPD, A=ABS Diff., D=% Diff.

Committed To *Your* Success

SURROGATE RECOVERIES REPORT

Job Number.: 914280

Report Date.: 12/29/1999

CUSTOMER: Marathon Oil Company

PROJECT: MOC - Bertha Barber

ATTN: Mr. Paul Peacock

Method.....: BTEX
Method Code.....: 8021BX

Batch.....: 51154
Analyst.....: weh

Surrogate	Units
1,4-Difluorobenzene	ug/L

Lab ID	Matrix	QC Type	Dilution	Result	True Value	Percent Recovery	Limits	Flag	Date	Time
		LCS		48.62	50.00	97.2	78-118		12/20/1999	0902
		MB		49.47	50.00	98.9	78-118		12/20/1999	0936
914279-2				49.75	50.00	99.5	78-118		12/20/1999	1020
914279-2		MS		48.62	50.00	97.2	78-118		12/20/1999	1054
914279-2		MSD		49.37	50.00	98.7	78-118		12/20/1999	1128
914324-9			1000	47.43	50.00	94.9	78-118		12/20/1999	1203
914326-1			500	47.68	50.00	95.4	78-118		12/20/1999	1237
914327-1			100	56.04	50.00	112.1	78-118		12/20/1999	1347
914327-2			100	52.74	50.00	105.5	78-118		12/20/1999	1421
914327-3			100	49.11	50.00	98.2	78-118		12/20/1999	1455
914327-4			100	48.94	50.00	97.9	78-118		12/20/1999	1530
914327-5			100	51.76	50.00	103.5	78-118		12/20/1999	1604
914327-6			100	52.94	50.00	105.9	78-118		12/20/1999	1637
914327-7				46.76	50.00	93.5	78-118		12/20/1999	1711
914279-16				48.98	50.00	98.0	78-118		12/20/1999	1745
914280-14				48.64	50.00	97.3	78-118		12/20/1999	1819
914279-3				47.51	50.00	95.0	78-118		12/20/1999	1853
914279-5				47.81	50.00	95.6	78-118		12/20/1999	1927
914279-6				47.98	50.00	96.0	78-118		12/20/1999	2001
		LCS		50.87	50.00	101.7	78-118		12/20/1999	2034
		MB		49.18	50.00	98.4	78-118		12/20/1999	2108
914279-7				47.65	50.00	95.3	78-118		12/20/1999	2142
914279-8				48.85	50.00	97.7	78-118		12/20/1999	2215
914279-8		MS		47.87	50.00	95.7	78-118		12/20/1999	2249
914279-8		MSD		48.76	50.00	97.5	78-118		12/20/1999	2323
914279-9				47.65	50.00	95.3	78-118		12/20/1999	2357
914279-10				47.54	50.00	95.1	78-118		12/21/1999	0031
914279-11				47.12	50.00	94.2	78-118		12/21/1999	0104
914279-12				48.39	50.00	96.8	78-118		12/21/1999	0138
914279-13				50.64	50.00	101.3	78-118		12/21/1999	0212
914279-17				50.96	50.00	101.9	78-118		12/21/1999	0245
914280-1				50.67	50.00	101.3	78-118		12/21/1999	0319
914280-5				49.85	50.00	99.7	78-118		12/21/1999	0352
		LCS		50.09	50.00	100.2	78-118		12/21/1999	0426

Surrogate	Units
BFB (Surrogate)	ug/L

Lab ID	Matrix	QC Type	Dilution	Result	True Value	Percent Recovery	Limits	Flag	Date	Time
		LCS		49.37	50.00	98.7	86-110		12/20/1999	0902
		MB		48.16	50.00	96.3	86-110		12/20/1999	0936
914279-2				47.92	50.00	95.8	86-110		12/20/1999	1020
914279-2		MS		48.37	50.00	96.7	86-110		12/20/1999	1054
914279-2		MSD		48.67	50.00	97.3	86-110		12/20/1999	1128

Committed To *Your* Success

SURROGATE RECOVERIES REPORT

Job Number.: 914280

Report Date.: 12/29/1999

CUSTOMER: Marathon Oil Company PROJECT: MOC - Bertha Barber ATTN: Mr. Paul Peacock

Surrogate	Units
BFB (Surrogate)	ug/L

Lab ID	Matrix	QC Type	Dilution	Result	True Value	Percent Recovery	Limits	Flag	Date	Time
914324-9			1000	45.98	50.00	92.0	86-110		12/20/1999	1203
914326-1			500	46.71	50.00	93.4	86-110		12/20/1999	1237
914327-1			100	49.74	50.00	99.5	86-110		12/20/1999	1347
914327-2			100	48.44	50.00	96.9	86-110		12/20/1999	1421
914327-3			100	49.80	50.00	99.6	86-110		12/20/1999	1455
914327-4			100	49.43	50.00	98.9	86-110		12/20/1999	1530
914327-5			100	48.32	50.00	96.6	86-110		12/20/1999	1604
914327-6			100	49.10	50.00	98.2	86-110		12/20/1999	1637
914327-7				46.12	50.00	92.2	86-110		12/20/1999	1711
914279-16				46.51	50.00	93.0	86-110		12/20/1999	1745
914280-14				47.66	50.00	95.3	86-110		12/20/1999	1819
914279-3				46.42	50.00	92.8	86-110		12/20/1999	1853
914279-5				46.99	50.00	94.0	86-110		12/20/1999	1927
914279-6				47.45	50.00	94.9	86-110		12/20/1999	2001
		LCS		47.63	50.00	95.3	86-110		12/20/1999	2034
		MB		49.22	50.00	98.4	86-110		12/20/1999	2108
914279-7				46.33	50.00	92.7	86-110		12/20/1999	2142
914279-8				48.83	50.00	97.7	86-110		12/20/1999	2215
914279-8		MS		48.79	50.00	97.6	86-110		12/20/1999	2249
914279-8		MSD		49.74	50.00	99.5	86-110		12/20/1999	2323
914279-9				47.58	50.00	95.2	86-110		12/20/1999	2357
914279-10				47.03	50.00	94.1	86-110		12/21/1999	0031
914279-11				47.01	50.00	94.0	86-110		12/21/1999	0104
914279-12				43.35	50.00	86.7	86-110		12/21/1999	0138
914279-13				46.14	50.00	92.3	86-110		12/21/1999	0212
914279-17				46.29	50.00	92.6	86-110		12/21/1999	0245
914280-1				45.85	50.00	91.7	86-110		12/21/1999	0319
914280-5				45.99	50.00	92.0	86-110		12/21/1999	0352
		LCS		47.37	50.00	94.7	86-110		12/21/1999	0426

Method.....: BTEX
Method Code.....: 8021BX

Batch.....: 51210
Analyst.....: weh

Surrogate	Units
1,4-Difluorobenzene	ug/L

Lab ID	Matrix	QC Type	Dilution	Result	True Value	Percent Recovery	Limits	Flag	Date	Time
		LCS		53.11	50.00	106.2	78-118		12/21/1999	1352
		MB		51.96	50.00	103.9	78-118		12/21/1999	1426
914326-2				52.22	50.00	104.4	78-118		12/21/1999	1500
914327-1			2000	53.46	50.00	106.9	78-118		12/21/1999	1534
914327-2			2000	53.32	50.00	106.6	78-118		12/21/1999	1609
914327-4			1000	53.08	50.00	106.2	78-118		12/21/1999	1643
914327-5			1000	53.64	50.00	107.3	78-118		12/21/1999	1717
914327-6			1000	53.41	50.00	106.8	78-118		12/21/1999	1751
914327-6		MS		53.15	50.00	106.3	78-118		12/21/1999	1825
914327-6		MSD		52.19	50.00	104.4	78-118		12/21/1999	1859

Committed To Your Success

SURROGATE RECOVERIES REPORT

Job Number.: 914280

Report Date.: 12/29/1999

CUSTOMER: Marathon Oil Company PROJECT: MOC - Bertha Barber ATTN: Mr. Paul Peacock

Surrogate	Units
1,4-Difluorobenzene	ug/L

Lab ID	Matrix	QC Type	Dilution	Result	True Value	Percent Recovery	Limits	Flag	Date	Time
914279-4			20	51.92	50.00	103.8	78-118		12/21/1999	2008
		LCS		54.18	50.00	108.4	78-118		12/21/1999	2150
		MB		53.25	50.00	106.5	78-118		12/21/1999	2224
914280-7				52.89	50.00	105.8	78-118		12/21/1999	2258
914280-7		MS		52.96	50.00	105.9	78-118		12/21/1999	2332
914280-7		MSD		53.34	50.00	106.7	78-118		12/22/1999	0006
914280-9				52.71	50.00	105.4	78-118		12/22/1999	0040
914280-10				52.60	50.00	105.2	78-118		12/22/1999	0114
914280-11				52.01	50.00	104.0	78-118		12/22/1999	0148
914280-12				53.15	50.00	106.3	78-118		12/22/1999	0223
		LCS		51.74	50.00	103.5	78-118		12/22/1999	0548

Surrogate	Units
BFB (Surrogate)	ug/L

Lab ID	Matrix	QC Type	Dilution	Result	True Value	Percent Recovery	Limits	Flag	Date	Time
		LCS		50.73	50.00	101.5	86-110		12/21/1999	1352
		MB		48.33	50.00	96.7	86-110		12/21/1999	1426
914326-2				48.83	50.00	97.7	86-110		12/21/1999	1500
914327-1			2000	49.37	50.00	98.7	86-110		12/21/1999	1534
914327-2			2000	48.98	50.00	98.0	86-110		12/21/1999	1609
914327-4			1000	49.14	50.00	98.3	86-110		12/21/1999	1643
914327-5			1000	49.95	50.00	99.9	86-110		12/21/1999	1717
914327-6			1000	49.36	50.00	98.7	86-110		12/21/1999	1751
914327-6		MS		49.08	50.00	98.2	86-110		12/21/1999	1825
914327-6		MSD		47.80	50.00	95.6	86-110		12/21/1999	1859
914279-4			20	52.49	50.00	105.0	86-110		12/21/1999	2008
		LCS		50.99	50.00	102.0	86-110		12/21/1999	2150
		MB		49.47	50.00	98.9	86-110		12/21/1999	2224
914280-7				49.00	50.00	98.0	86-110		12/21/1999	2258
914280-7		MS		50.56	50.00	101.1	86-110		12/21/1999	2332
914280-7		MSD		50.52	50.00	101.0	86-110		12/22/1999	0006
914280-9				48.53	50.00	97.1	86-110		12/22/1999	0040
914280-10				50.30	50.00	100.6	86-110		12/22/1999	0114
914280-11				47.12	50.00	94.2	86-110		12/22/1999	0148
914280-12				47.37	50.00	94.7	86-110		12/22/1999	0223
		LCS		48.38	50.00	96.8	86-110		12/22/1999	0548

Committed To *Your* Success

SURROGATE RECOVERIES REPORT

Job Number.: 914280

Report Date.: 12/29/1999

CUSTOMER: Marathon Oil Company

PROJECT: MOC - Bertha Barber

ATTN: Mr. Paul Peacock

Method.....: BTEX
Method Code.....: 8021BX

Batch.....: 51266
Analyst.....: weh

Surrogate	Units
1,4-Difluorobenzene	ug/L

Lab ID	Matrix	QC Type	Dilution	Result	True Value	Percent Recovery	Limits	Flag	Date	Time
		LCS		50.82	50.00	101.6	78-118		12/22/1999	1020
		MB		50.62	50.00	101.2	78-118		12/22/1999	1056
914451-5				51.68	50.00	103.4	78-118		12/22/1999	1132
914280-13				50.64	50.00	101.3	78-118		12/22/1999	1208
914280-13		MS		51.43	50.00	102.9	78-118		12/22/1999	1244
914280-13		MSD		51.03	50.00	102.1	78-118		12/22/1999	1320
914280-2				51.77	50.00	103.5	78-118		12/22/1999	1356
914280-3				50.85	50.00	101.7	78-118		12/22/1999	1432
914280-4				53.32	50.00	106.6	78-118		12/22/1999	1507
914280-6				51.38	50.00	102.8	78-118		12/22/1999	1543
914280-8				51.70	50.00	103.4	78-118		12/22/1999	1618
914279-1				51.03	50.00	102.1	78-118		12/22/1999	1654
914279-15				52.31	50.00	104.6	78-118		12/22/1999	1730
914279-14			10	49.96	50.00	99.9	78-118		12/22/1999	1806
		LCS		52.18	50.00	104.4	78-118		12/22/1999	1842

Surrogate	Units
BFB (Surrogate)	ug/L

Lab ID	Matrix	QC Type	Dilution	Result	True Value	Percent Recovery	Limits	Flag	Date	Time
		LCS		48.19	50.00	96.4	86-110		12/22/1999	1020
		MB		46.60	50.00	93.2	86-110		12/22/1999	1056
914451-5				48.16	50.00	96.3	86-110		12/22/1999	1132
914280-13				47.04	50.00	94.1	86-110		12/22/1999	1208
914280-13		MS		48.64	50.00	97.3	86-110		12/22/1999	1244
914280-13		MSD		49.20	50.00	98.4	86-110		12/22/1999	1320
914280-2				48.43	50.00	96.9	86-110		12/22/1999	1356
914280-3				48.36	50.00	96.7	86-110		12/22/1999	1432
914280-4				51.65	50.00	103.3	86-110		12/22/1999	1507
914280-6				47.30	50.00	94.6	86-110		12/22/1999	1543
914280-8				49.05	50.00	98.1	86-110		12/22/1999	1618
914279-1				51.36	50.00	102.7	86-110		12/22/1999	1654
914279-15				51.30	50.00	102.6	86-110		12/22/1999	1730
914279-14			10	51.68	50.00	103.4	86-110		12/22/1999	1806
		LCS		49.12	50.00	98.2	86-110		12/22/1999	1842

Committed To *Your* Success

SURROGATE RECOVERIES REPORT

Job Number.: 914280

Report Date.: 12/29/1999

CUSTOMER: Marathon Oil Company PROJECT: MOC - Bertha Barber ATTN: Mr. Paul Peacock

Method.....: Polynuclear Aromatic Hydrocarbons-HPLC
Method Code.....: 8310

Batch.....: 51476
Analyst.....: rm

Surrogate	Units
1-Fluoronaphthalene	ug/L

Lab ID	Matrix	QC Type	Dilution	Result	True Value	Percent Recovery	Limits	Flag	Date	Time
		MB		387.73	1000	38.8	10-74		12/23/1999	2312
		LCS		240.33	1000	24.0	10-74		12/23/1999	2350
914280-1				242.34	1000	24.2	10-74		12/24/1999	0029
914280-1		MS		262.38	1000	26.2	10-74		12/24/1999	0107
914280-1		MSD		183.20	1000	18.3	10-74		12/24/1999	0145
914280-2				309.17	1000	30.9	10-74		12/24/1999	0223
914280-3				714.00	1000	71.4	10-74		12/24/1999	0302
914280-4				572.72	1000	57.3	10-74		12/24/1999	0340
914280-5				420.71	1000	42.1	10-74		12/24/1999	0418
914280-6				490.27	1000	49.0	10-74		12/24/1999	0456
914280-7				306.85	1000	30.7	10-74		12/24/1999	0535
914280-8				250.85	1000	25.1	10-74		12/24/1999	0613
914280-9				655.10	1000	65.5	10-74		12/24/1999	0651
914280-10				397.52	1000	39.8	10-74		12/24/1999	0729
914280-11				598.67	1000	59.9	10-74		12/24/1999	0808
914280-12				460.39	1000	46.0	10-74		12/24/1999	0846

Surrogate	Units
Terphenyl-d14	ug/L

Lab ID	Matrix	QC Type	Dilution	Result	True Value	Percent Recovery	Limits	Flag	Date	Time
		MB		641.84	1000	64.2	56-122		12/23/1999	2312
		LCS		734.55	1000	73.5	56-122		12/23/1999	2350
914280-1				666.05	1000	66.6	56-122		12/24/1999	0029
914280-1		MS		702.42	1000	70.2	56-122		12/24/1999	0107
914280-1		MSD		728.22	1000	72.8	56-122		12/24/1999	0145
914280-2				893.47	1000	89.3	56-122		12/24/1999	0223
914280-3				871.35	1000	87.1	56-122		12/24/1999	0302
914280-4				2274.55	1000	227.5	56-122	X	12/24/1999	0340
914280-5				2731.11	1000	273.1	56-122	X	12/24/1999	0418
914280-6				2057.12	1000	205.7	56-122	X	12/24/1999	0456
914280-7				2236.42	1000	223.6	56-122	X	12/24/1999	0535
914280-8				1554.19	1000	155.4	56-122	X	12/24/1999	0613
914280-9				573.18	1000	57.3	56-122		12/24/1999	0651
914280-10				683.87	1000	68.4	56-122		12/24/1999	0729
914280-11				765.28	1000	76.5	56-122		12/24/1999	0808
914280-12				728.89	1000	72.9	56-122		12/24/1999	0846

Committed To *Your* Success

QUALITY ASSURANCE FOOTER

METHOD REFERENCES

1. EPA SW-846, Test Methods for Evaluating Solid Waste Update I, IIA, IIB, III
2. Standard Methods for the Examination of Water and Wastewater, 18th Edition
3. EPA 600/4-79-020, Methods of Chemical Analysis for Waters and Wastes, March 1983
4. Federal Register, Friday, October 26, 1984 (40 CFR Part 136)
5. American Society for Testing and Materials, Volumes 5.01, 5.02, 5.03, 11.01,11.02,11.03,11.04
6. EPA Methods for Environmental Samples

COMMENTS

All methods of chemical analysis have a statistical uncertainty associated with the results. Unless otherwise indicated, the data in this report are within the limits of uncertainty as specified in the referenced method. Quality Control acceptance criteria are based either on actual laboratory performance or on limits specified in the referenced method. The date and time of analysis indicated on the QA report may not reflect the actual time of analysis for QC samples. All data are reported on an "as received" basis unless otherwise indicated. Data reported in the QA report may be lower than sample data due to dilution of samples into the calibration range of the analysis. Sample concentration for solid samples are calculated on an as received (wet) basis. Unless otherwise indicated, volatiles by gas chromatography (GC) are reported from a single column. Volatile analysis by GC on low level soil extractions are conducted at room temperature.

FLAGS, FOOTNOTES AND ABBREVIATIONS (as needed)

NA	=	Not Analyzed	ND	=	Not detected at a value greater than the reporting limit
N/A	=	Not applicable	NC	=	Not calculable due to values lower than the reporting limit
ug/L	=	Micrograms per liter	mg/L	=	Milligrams per liter
ug/Kg	=	Micrograms per kilogram	mg/kg	=	Milligrams per kilogram
U	=	Undetected			
J	=	Indicates value is > MDL, but < Reporting Limit			
B	=	Analyte was detected in the method blank analyzed with this sample.			
D	=	Surrogate recoveries are not calculated due to sample dilution.			
X	=	Surrogate recovery is outside quality control limits.			
Y	=	Spike or spike duplicate recovery is outside quality control limits.			
Z	=	Relative percent difference for a spike and spike duplicate is outside quality control limits. The precision of the method was impacted by matrix.			
^	=	Indicates value is above QC acceptance criteria.			

QC SAMPLE IDENTIFICATIONS

MB	=	Method Blank	SB	=	Storage Blank
RB	=	Reagent Blank	EB	=	Extraction Blank
PB	=	Preparation Blank	CALB	=	Calibration Blank
MD	=	Method Duplicate	RS	=	Reference Standard
LCS	=	Laboratory Control Sample	LCSD	=	Laboratory Control Sample Duplicate
MS	=	Matrix Spike	MSD	=	Matrix Spike Duplicate
ICB	=	Initial Calibration Blank	CCB	=	Continuing Calibration Blank
ICV	=	Initial Calibration Verification	ICB	=	Initial Calibration Blank
PDS	=	Post Digestion Spike	SS	=	Surrogate Spike
ISA	=	Interference Check standard "A"	ISB	=	Interference Check Standard "B"
ISCAB	=	Interference Check Sample AB	MSA	=	Method of Standard Additions
CAL	=	Calibration standard	SD	=	Serial Dilution
MST	=	TCLP Matrix Spike	MSQ	=	TCLP Matrix Spike Duplicate
PST	=	TCLP Post Digestion Spike	LCT	=	TCLP Laboratory Control Sample

rpjsckl

Job Sample Receipt Checklist Report
12/16/99

V2

Job Number.....: 914280 Location.: 57211 Customer Job ID.....: Job Check List Date.: 12/16/99
Project Number.: 96000703 Project Description.: MOC - Bertha Barber Project Manager.....: lpa
Customer.....: Marathon Oil Company Contact.: Mr. Paul Peacock

Questions ?	(Y/N)	Comments
Chain-of-Custody Present?.....	Y	
Custody seal on shipping container?.....	Y	
...If "yes", custody seal intact?.....	Y	
Custody seals on sample containers?.....		
...If "yes", custody seal intact?.....		
Samples chilled?.....	Y	
Temperature of cooler acceptable? (4 deg C +/- 2).		RECEIVED ON ICE
Samples received intact (good condition)?.....	Y	
Volatile samples acceptable? (no headspace).....	Y	
Correct containers used?.....	Y	
Adequate sample volume provided?.....	Y	
Samples preserved correctly?.....	Y	
Samples received within holding-time?.....	Y	
Agreement between COC and sample labels?.....	Y	
Additional.....		
Comments.....		
Sample Custodian Signature.....		

ARCADIS GERAGHTY & MILLER Laboratory Task Order No./P.O. No. 914280 **CHAIN-OF-CUSTODY RECORD** Page ____ of ____

Project Number/Name NP000449 0002
Project Location Bertha Barber
Laboratory Core Lab
Project Manager John Horst
Sampler(s)/Affiliation Corey Beavers

ANALYSIS / METHOD / SIZE

	Sample ID/Location	Matrix	Date/~~Time~~ Sampled	Time ~~Lab ID~~	BTex	PAH's	Cl, TDS	Dissolved Mn, Ba, Fe			Remarks	Total
1	MW2	L	12-15	1:00	2	1	1	1				5
2	MW3	L	12-15	10:00	2	1	1	1				5
3	MW4	L	12-15	8:30	2	1	1	1				5
4	MW5	L	12-15	11:00	2	1	1	1				5
5	MW6	L	12-14	12:00	2	1	1	1				5
6	MW7	L	12-14	3:30	2	1	1	1				5
7	MW8	L	12-14	4:15	2	1	1	1				5
8	MW9	L	12-14	2:00	2	1	1	1				5
9	MW11	L	12-14	5:00	2	1	1	1				5
10	MW12	L	12-14	3:00	2	1	1	1				5
11	MW13	L	12-14	1:00	2	1	1	1				5
12	Dup 1	L	~~12-14~~ CB		2	1	1	1				5
13	Field Blank 1	L	12-15	8:30	2							2
14	Trip Blank	L			2							2

Sample Matrix: L = Liquid; S = Solid; A = Air

Total No. of Bottles/Containers 64

Relinquished by: Corey Beavers	Organization: AGM	Date 12/15/99	Time 17:00	Seal Intact? Yes No N/A
Received by: [illegible]	Organization: STL	Date 12/16/99	Time 1400	
Relinquished by:	Organization:	Date / /	Time	Seal Intact? Yes No N/A
Received by:	Organization:	Date / /	Time	

Special Instructions/Remarks: Bill to Paul Peacock at Marathon

Delivery Method: ☐ In Person ☒ Common Carrier Fed Ex (SPECIFY) ☐ Lab Courier ☐ Other ____ (SPECIFY)

Appendix F

Water Well Inventory

172	TOB	71/09/08	SED	REC	19S.37E.01.21341	3641.00	DP	97	913	[illegible]	[illegible]	[illegible]	[illegible]
172	TOB	77/07/13	SED	REC	19S.37E.01.21341	3641.00	DP	44	676	[illegible]	[illegible]	[illegible]	[illegible]
172	TOB	84/09/26	SED	REC	19S.37E.01.21341	3641.00	DP	81	725	0	[illegible]	1084	[illegible]
172	TOB	93/11/07	SED	REC	19S.37E.01.21341	3641.00	DP	91	670	0	[illegible]	0796	[illegible]
0	TOB	79/10/19	SED	DOM	19S.37E.04.111414	0.00	YT	34	505	0	[illegible]	[illegible]	[illegible]
130	TOB	84/07/24	SED	DOM	19S.37E.04.111432	0.00	YT	107	0	0	[illegible]	[illegible]	[illegible]
130	TOB	85/02/07	SED	DOM	19S.37E.04.111432	0.00	DP	35	409	0	[illegible]	[illegible]	[illegible]
29	TOB	29/09/19	USS	DOM	19S.37E.04.111444	3692.00		32	0	[illegible]	[illegible]	[illegible]	[illegible]
127	TOB	44/07/22	SED	IRR	19S.37E.04.11333	3692.00	DP	250	0	[illegible]	[illegible]	[illegible]	23-12260
127	TOB	68/09/22	SED	IRR	19S.37E.04.11333	3692.00	DP	73	670	0	0877	[illegible]	23-12260
127	TOB	71/09/22	SED	IRR	19S.37E.04.11333	3692.00	DP	91	607	0	0877	[illegible]	23-12260
127	TOB	79/07/13	SED	IRR	19S.37E.04.11333	3692.00	DP	30	636	0	[illegible]	[illegible]	[illegible]
127	TOB	84/09/19	SED	IRR	19S.37E.04.11333	3692.00	DP	28	543	0	[illegible]	[illegible]	23-12260
127	TOB	90/06/14	SED	IRR	19S.37E.04.11333	3692.00	DP	71	565	0	[illegible]	[illegible]	[illegible]-12260
145	TOB	79/10/17	SED	IRR	19S.37E.04.411122	3974.00	DP	34	607	0	[illegible]	[illegible]	[illegible]
145	TOB	84/09/19	SED	IRR	19S.37E.04.411122	3974.00	DP	42	647	0	1084	[illegible]	[illegible]
0	TOB	60/11/21	DCC	STK	19S.37E.04.41200	3672.00	DP	192	0	0	[illegible]	P	23-12263
120	TOB	60/11/22	DCC	DOM	19S.37E.04.412231	3672.00	YT	37	0	0	[illegible]	[illegible]	[illegible]
120	TOB	76/12/21	SED	STK	19S.37E.04.412231	3672.00	DP	90	1114	0	[illegible]	[illegible]	23-12263
120	TOB	77/06/17	SED	DOM	19S.37E.04.412231	3672.00	YT	88	1161	0	[illegible]	0877	23-12263
120	TOB	79/10/19	SED	STK	19S.37E.04.412231	3672.00	DP	49	746	0	[illegible]	0880	[illegible]-12263
120	TOB	84/09/26	SED	STK	19S.37E.04.412231	3672.00	DP	65	903	0	64	0856	23-12263
80	TOB	79/10/24	SED	STK	19S.37E.08.31111	3698.00	DP	49	731	0	65	[illegible]	23-12247
70	TOB	79/10/19	SED	STK	19S.37E.16.233212	3630.00	DP	44	660	0	[illegible]	[illegible]	[illegible]
70	TOB	84/11/08	SED	STK	19S.37E.16.233212	3630.00	DP	34	610	[illegible]	1284	[illegible]	23-12274
70	TOB	90/06/14	SED	STK	19S.37E.16.233212	3630.00	DP	73	611	0	1190	[illegible]	23-12274
70	TOB	93/09/14	SED	STK	19S.37E.16.233212	3630.00	DP	37	520	0	0196	[illegible]	23-12274
0	TOB	79/10/19	SED	STK	19S.37E.17.43143	3665.00	DP	46	686	0	66	[illegible]	23-12276
0	TOB	84/09/26	SED	STK	19S.37E.17.43143	3665.00	DP	78	797	0	65	1184	23-12276
0	TOB	90/06/14	SED	STK	19S.37E.17.43143	3665.00	DP	76	754	0	[illegible]	1190	[illegible]
0	TOB	93/09/13	SED	STK	19S.37E.17.43143	3665.00	DP	74	670	[illegible]	0196	[illegible]	23-12276
116	TOB	79/10/24	SED	STK	19S.37E.19.113211	3703.00	DP	62	728	[illegible]	[illegible]	[illegible]	23-12278
116	TOB	84/11/08	SED	STK	19S.37E.19.113211	3703.00	DP	45	681	[illegible]	1284	[illegible]	23-12278
0	TOB	90/06/14	SED	STK	19S.37E.19.42222	3642.00	DP	225	1140	0	[illegible]	1190	[illegible]
0	TOB	93/09/11	SED	STK	19S.37E.19.42222	3642.00	DP	104	710	0	[illegible]	0196	[illegible]
0	TOB	77/10/24	SED	STK	19S.37E.20.23152	3677.00	DP	116	968	0	[illegible]	[illegible]	23-12279
31	TOB	79/11/07	SED	STK	19S.37E.23.334133	3615.00	DP	86	1027	[illegible]	[illegible]	[illegible]	23-12281
31	TOB	84/11/07	SED	STK	19S.37E.23.334133	3615.00	DP	61	777	[illegible]	1284	[illegible]	23-12281
31	TOB	90/06/19	SED	STK	19S.37E.23.334133	3615.00	DP	89	937	[illegible]	1190	[illegible]	23-12281
31	TOB	93/11/16	SED	STK	19S.37E.23.334133	3615.00	DP	73	760	0	65	0796	23-12281
0	TOB	84/09/26	SED	DOM	19S.37E.28.42421	3586.00	YT	60	757	0	[illegible]	1184	[illegible]
0	TOB	90/06/19	SED	DOM	19S.37E.28.42421	3586.00	YT	65	716	0	[illegible]	1190	[illegible]
0	DAL	79/11/29	SED	STK	19S.37E.28.42422	3564.00	DP	98	1133	[illegible]	[illegible]	[illegible]	23-12282
43	DAL	84/07/13	USG	RTU	19S.37E.29.43143	3589.00	YT	91	865	[illegible]	[illegible]	[illegible]	[illegible]
43	DAL	88/08/08	SED	RTU	19S.37E.29.43143	3589.00	YT	73	678	[illegible]	[illegible]	[illegible]	[illegible]
28	DAL	79/11/29	SED	DOM	19S.37E.30.444123	3594.00	YT	88	947	[illegible]	[illegible]	[illegible]	[illegible]
28	DAL	84/09/26	SED	DOM	19S.37E.30.444123	3594.00	YP	151	1001	[illegible]	1184	[illegible]	[illegible]
28	TOB	90/06/14	SED	DOM	19S.37E.30.444123	3594.00	DP	113	933	[illegible]	1190	[illegible]	[illegible]
28	DAL	93/09/11	SED	DOM	19S.37E.30.444123	3594.00	YT	37	800	[illegible]	0196	[illegible]	[illegible]
0	DAL	79/10/23	SED	DOM	19S.37E.32.31440	3569.00	DP	224	1582	[illegible]	[illegible]	[illegible]	23-12878
0	TOB	79/10/23	SED	DOM	19S.37E.32.411343	3570.00	YT	260	1601	[illegible]	[illegible]	[illegible]	[illegible]
0	TOB	84/11/07	SED	DOM	19S.37E.32.411343	3570.00	YT	134	1037	0	[illegible]	1284	[illegible]
0	TOB	79/10/23	SED	IRR	19S.37E.32.41322	3567.00	DP	226	1427	0	[illegible]	[illegible]	[illegible]

DEPTH	UBF	DATECLTD	CLTR	USE	LOCATION	LSELEV	PT_CLTN	CHLORIDES	CONDUCT	TDS	TEMP	ADD_DATA	CARD_DATE	SOURCE	DPN	RE
40	GAL	53/04/22	USG	DOM	208.37E.04.11114	0.00	DP	425	2090	0	0		0785			0
40	GAL	58/09/09	SED	NOT	208.37E.04.11114	0.00	YT	325	1670	0	0		0785			0
45	GAL	53/04/22	USG	DOM	208.37E.04.221321	3558.00	YT	51	758	0	0					0
45	GAL	58/09/09	SED	DOM	208.37E.04.221321	3558.00	YT	47	708	0	0	1		U	25-10431	0
45	GAL	77/07/14	SED	DOM	208.37E.04.221321	3555.00	TS233	106	1070	0	0		ABDN		25-10431	0
45	GAL	79/10/25	SED	STK	208.37E.04.221321	3558.00	DP	214	1506	0	65				25-10431	0
45	GAL	85/02/06	SED	DOM	208.37E.04.221321	3558.00	TS841	81	964	0	0		0385		25-10431	0
0	TDS	79/11/29	SED	DOM	208.37E.05.222144	3559.00	YT	258	1611	0	0					0
0	TDS	84/09/26	SED	DOM	208.37E.05.222144	3559.00	YT	314	1729	0	0		1184			0
0	TDS	90/06/19	SED	DOM	208.37E.05.222144	3559.00	YT	313	1766	0	0		1190			0
0	TDS	95/10/17	SED	DOM	208.37E.05.222144	3557.00	YT	286	1300	0	0		0796			0
90	TDS	79/11/09	SED	STK	208.37E.07.24331	3553.00	DP	1745	4232	0	0				25-11254	0
90	TDS	85/02/13	SED	STK	208.37E.07.24331	3553.00	DP	2680	9160	0	68		0385		25-11254	0
75	TDS	79/11/29	SED	GRO	208.37E.08.214124	3548.00	DP	868	3734	0	57					0
62	GAL	79/10/25	SED	DOM	208.37E.08.423223	3545.00	YT	520	2396	0	55				25-12998	0
62	GAL	84/05/25	SED	STK	208.37E.08.423223	3545.00	YT	895	3906	0	0		1184		25-12998	0
62	GAL	90/06/14	SED	STK	208.37E.08.423223	3545.00	DP	780	3022	0	72		1190		25-12998	0
40	TDS	79/11/29	SED	STK	208.37E.09.112122	3534.00	DP	176	1284	0	65				25-10270	0
0	TDS	79/10/25	SED	STK	208.37E.09.33122	3534.00	DP	584	2543	0	63				25-10439	0
78	TDS	79/11/08	SED	STK	208.37E.13.32130	3540.00	DP	468	1770	0	0				25-10440	0
38	TDS	79/10/24	SED	STK	208.37E.16.314141	3522.00	DP	2350	11695	0	69				25-12640	0
38	TDS	85/02/06	SED	STK	208.37E.16.314141	3522.00	TS830	2950	12117	0	0		0385		25-12640	0
38	GAL	90/06/14	SED	NOT	208.37E.16.314141	3522.00	TS830	4010	13448	0	0		1190		25-12640	0
38	GAL	95/10/31	SED	STK	208.37E.16.314141	3522.00	TS830	2230	9610	0	0		0796		25-12640	0
80	TDS	79/11/28	SED	GRO	208.37E.19.214144	3531.00	DP	136	1377	0	60					0
80	TDS	84/10/03	SED	GRO	208.37E.19.214144	3531.00	DP	188	1410	0	0		1184			0
80	TDS	90/06/14	SED	GRO	208.37E.19.214144	3531.00	DP	347	1542	0	70		1190			0
100	TDS	95/10/17	SED	GRO	208.37E.19.214144	3531.00	DP	636	2120	0	0		0796		25-05135	0
42	TDS	79/11/07	SED	STK	208.37E.29.24413	3482.00	TANK	1013	3845	0	0				25-11257	0
42	TDS	85/02/08	SED	STK	208.37E.29.24413	3482.00	DP	1000	3971	0	0		0385		25-11257	0
0	GAL	60/11/22	OCC	STK	208.37E.29.34443	3526.00	DP	293	0	0	0	X			25-10447	0
0	GAL	77/07/14	SED	STK	208.37E.29.34443	3526.00	TS8120	248	1545	0	0		ABDN		25-10447	0
0	GAL	79/11/28	SED	STK	208.37E.29.34443	3526.00	DP	296	2525	0	65				25-10447	0
0	GAL	79/11/08	SED	STK	208.37E.31.44421	3539.00	DP	144	1903	0	0				25-10450	0
0	GAL	90/07/09	SED	NOT	208.37E.35.423413	3474.00	TS880	75	791	0	0		1190			0
0	GAL	95/10/31	SED	STK	208.37E.35.423413	3474.00	TS880	66	760	0	0		0796			0
0	TDS	79/11/08	SED	STK	208.37E.35.423433	3468.00	DP	78	948	0	0				25-10453	0
0	TDS	85/02/06	SED	STK	208.37E.35.423433	3468.00	TS891	118	906	0	0		0385		25-10453	0
105	TDS	78/05/03	OCC	DWD	208.38E.01.34431	3576.00		57	0	0	0		ABDN		25-13262	0
105	TDS	78/05/17	SED	DWD	208.38E.01.34431	3576.00	TS105	82	1033	0	0		ABDN		25-13262	0
105	TDS	84/09/25	SED	STK	208.38E.01.34431	3576.00	DP	165	1077	0	0		1184		25-13262	0
0	GAL	78/05/17	SED	STK	208.38E.02.141114	3575.00	DP	73	954	0	66				25-13028	0
0	GAL	84/09/25	SED	STK	208.38E.02.141114	3575.00	DP	107	1253	0	68		1184		25-13028	0
0	GAL	90/06/19	SED	STK	208.38E.02.141114	3575.00	DP	243	1391	0	66		1190		25-13028	0
116	GAL	43/09/08	SED	IRR	208.38E.02.212211	3579.00	DP	310	2220	0	0					0
116	GAL	77/06/17	SED	IRR	208.38E.02.212211	3579.00	DP	400	2685	0	66		0677			0
0	GAL	78/05/03	OCC	STK	208.38E.02.412422	3565.00	DP	57	0	0	0			D	25-10457	0
0	GAL	78/05/17	SED	STK	208.38E.02.412422	3565.00	DP	57	757	0	66				25-10457	0
0	GAL	85/02/14	SED	STK	208.38E.02.412422	3565.00	DP	75	930	0	64		0385		25-10457	0
0	TDS	79/11/08	SED	DOM	208.38E.06.143121	3598.00	YT	100	1047	0	0					0
0	TDS	85/02/13	SED	DOM	208.38E.06.143121	3598.00	YT	243	1550	0	0		0385			0
0	TDS	90/06/19	SED	DOM	208.38E.06.143121	3598.00	YT	1010	3064	0	0		1190			0
0	TDS	95/10/03	SED	DOM	208.38E.06.143121	3598.00	YT	410	1800	0	0		0196			0

DEPTH	WSF	DATE	CLTR	USE	LOCATION	LEELEV	PT_CLTN	CHLORIDES	CONDUCT	TDS	TEMP	ADD_DATA	CARD_DATE	SOURCE	GPM
38	TDS	79/10/24	SED	STK	20S.33E.01.22211	3656.00	DP	188	1318						23-10268
38	TDS	84/10/11	SED	STK	20S.33E.01.22211	3656.00	DP	68	810						23-10268
39	CAL	90/06/13	SED	STK	20S.33E.01.22211	3655.00	DP	210	1273	0	67		1190		23-10268
38	CAL	95/11/16	SED	STK	20S.33E.01.22211	3656.00	DP	194	1260	0	65		0796		23-10268
0	TDS	79/10/23	SED	STK	20S.33E.03.31424	3685.00	DP	368	3741	0	65				23-10404
0	TDS	79/11/28	SED	STK	20S.33E.03.31424	3685.00	DP	366	3768	0	65				23-10404
0	TDS	84/10/11	SED	STK	20S.33E.03.31424	3685.00	SBBLR	367	3960	0	64				23-10404
0	TDS	90/06/13	SED	STK	20S.33E.03.31424	3685.00	DP	350	3659	0	66		1190		23-10404
0	TDS	95/09/14	SED	STK	20S.33E.03.31424	3685.00	DP	230	3220	0	0		0196		23-10404
0	TDS	79/10/23	SED	STK	20S.33E.06.33133	3677.00	DP	876	5154	0	0				23-10404
85	TDS	79/11/09	SED	STK	20S.33E.31.12311	3729.00	DP	20	537	0	0				23-10407
85	TDS	84/10/16	SED	STK	20S.33E.31.12311	3729.00	DP	30	570	0	66		1184		23-10407
135	TDS	79/11/08	SED	STK	20S.33E.33.43413	3699.00	DP	56	877	0	0				23-10408
0	TDS	79/11/08	SED	STK	20S.33E.35.33432	3678.00	DP	112	443	0	0				23-10409
0		88/01/28	SED	SYL	20S.36E.01.111	0.00	SISPIT	1380	3840	0	0				
50	TDS	79/10/19	SED	STK	20S.36E.03.33111	3620.00	DP	144	932	0	66				23-10411
50	TDS	84/10/12	SED	STK	20S.36E.03.33111	3620.00	DP	169	1060	0	63		1184		23-10411
33	TDS	79/10/19	SED	STK	20S.36E.09.13440	3609.00	DP	540	2566	0	66				23-10415
33	TDS	84/10/12	SED	STK	20S.36E.09.13440	3609.00	DP	434	2350	0	63		1184		23-10415
33	CAL	90/06/14	SED		20S.36E.09.13440	3609.00	DP	463	2174	0	68		1190		23-10415
33	CAL	95/09/13	SED	STK	20S.36E.09.13440	3609.00	DP	328	1910	0	0		0196		23-10415
45	CAL	72/08/28	OCC	STK	20S.36E.10.32114	3595.00	DP	79	520	0	0			0	23-10416
45	CAL	76/11/01	SED	STK	20S.36E.10.32114	3595.00	DP	66	889	0	66				23-10416
45	CAL	77/10/17	SED	STK	20S.36E.10.32114	3595.00	DP	65	880	0	64				23-10416
45	CAL	84/10/12	SED	STK	20S.36E.10.32114	3595.00	DP	92	980	0	68		1184		23-10416
45	CAL	90/06/14	SED	STK	20S.36E.10.32114	3595.00	DP	106	1989	0	67		1190		23-10416
45	CAL	95/09/13	SED	STK	20S.36E.10.32114	3595.00	DP	101	920	0	0		0196		23-10416
65	CAL	72/08/28	OCC	STK	20S.36E.11.42243	3566.00	DP	1000	1450	0	0			0	23-10417
65	CAL	76/11/01	SED	STK	20S.36E.11.42243	3566.00	DP	918	3969	0	63				23-10417
65	CAL	77/10/17	SED	STK	20S.36E.11.42243	3566.00	DP	1074	4367	0	68				23-10417
65	CAL	84/10/12	SED	STK	20S.36E.11.42243	3566.00	DP	840	4330	0	68		1184		23-10417
65	CAL	90/06/14	SED	STK	20S.36E.11.42243	3566.00	DP	1320	4290	0	68		1190		23-10417
65	CAL	95/09/13	SED	STK	20S.36E.11.42243	3566.00	DP	960	3920	0	0		0196		23-10417
0		91/05/15	SED	DOM	20S.36E.12.124	0.00	DP	24000	0	0	0		0791		
0	CAL	72/08/23	OCC	DOM	20S.36E.15.242421	3575.00	YT	720	1800	0	0			0	23-11251
0	CAL	76/11/01	SED	STK	20S.36E.15.242421	3575.00	YT	910	3777	0	0				23-11251
0	CAL	84/10/12	SED	STK	20S.36E.15.242421	3575.00	DP	882	3630	0	65		1184		23-11251
0	CAL	86/05/07	SED	STK	20S.36E.15.242421	3575.00	DP	884	3715	0	70		0586		23-11251
0	CAL	90/06/14	SED	STK	20S.36E.15.242421	3575.00	DP	830	3404	0	0		1190		23-11251
0	CAL	95/09/13	SED	STK	20S.36E.15.242421	3575.00	DP	590	2350	0	0		0196		23-11251
30	TDS	54/03/20	USG	STK	20S.36E.15.24342	3574.00	DP	1050	6750	0	0	X		0	23-11022
36	TDS	56/03/07	SED	STK	20S.36E.15.24342	3574.00	YT	1210	7500	0	0				
36	TRC	72/08/28	OCC	DOM	20S.36E.15.243428	3574.00	YT	1290	2900	0	0				
36	TRC	76/11/01	SED	DOM	20S.36E.15.243428	3574.00	YT	1197	3750	0	70				
265	TDS	79/11/09	SED	STK	20S.36E.26.24344	3555.00	DP	130	1190	0	0				23-10424
265	TDS	83/02/08	SED	STK	20S.36E.26.24344	3555.00	DP	150	1798	0	68		0383		23-10424
265	TRC	90/06/14	SED	STK	20S.36E.26.24344	3555.00	DP	207	1872	0	70		1190		23-10424
265	TRC	95/09/13	SED	STK	20S.36E.26.24344	3555.00	DP	133	1660	0	0		0196		23-10424
0	TDS	79/11/08	SED	STK	20S.36E.26.24443	3552.00	DP	182	1895	0	0				23-10425
230	TRC	79/11/08	SED	STK	20S.36E.35.24444	3545.00	BP	118	1541	0	0				23-10426
0	CAL	90/06/19	SED	STK	20S.37E.03.34131	3545.00	DP	1510	4167	0	50		1190		23-11253
0	CAL	95/09/13	SED	STK	20S.37E.03.34131	3545.00	DP	640	3230	0	0		0196		23-10429
40	CAL	94/04/02	USG	DOM	20S.37E.04.11114	0.00	DP	450	2180	0	0	X		0	23-10427

DEPTH	WBF	DATECLTD	CLTR	USE	LOCATION	LSELEV	PT_DLTN	CHLORIDES	CONDUCT	TDS	TEMP	ADD_DATA	CARD_DATE	SOURCE	DPN	METER
0	TDS	84/09/20	SED	IRR	19S.37E.32.41322	3567.00	DP	233	1393	0	0					
40	TDS	79/11/29	SED	DOM	19S.37E.34.112412	3576.00	YT	60	731	0	0					
40	TDS	84/09/26	SED	DOM	19S.37E.34.112412	3576.00	YT	49	700	0	0					
40	TDS	84/11/07	SED	DOM	19S.37E.34.112412	3576.00	YT	59	723	0	0	1284				0
50	TDS	79/10/11	SED	IRR	19S.37E.34.334322	3563.00	DP	94	1039	0	67					0
53	TDS	78/10/17	SED	IRR	19S.38E.01.314242	3607.00	SPRKLR	240	1666	0	0					0
0	TDS	53/03/29	USB	MUN	19S.38E.02.13321	0.00		80	849	0	0					0
0	TDS	57/08/14	SED		19S.38E.03.13133	0.00	YT	80	0	0	0					0
0	TDS	57/08/14	SED	DOM	19S.38E.04.112243	0.00	DP	88	0	0	0					0
0	TDS	57/08/14	SED	DOM	19S.38E.04.12124	0.00	DP	104	0	0	0					0
0	TDS	57/08/13	SED	PPF	19S.38E.04.12414	0.00	DP	327	0	0	0	ABDN				0
0	TDS	57/08/12	SED	DOM	19S.38E.04.243321	3612.00	YT	40	0	0	0					0
0	TDS	79/10/18	SED	DOM	19S.38E.04.243321	3612.00	YT	90	816	0	65					0
110	TDS	79/10/19	SED	DOM	19S.38E.04.243323	3612.00	YT	28	655	0	66					0
110	TDS	57/08/14	SED	DOM	19S.38E.04.243323	3612.00	YT	64	0	0	0					0
110	TDS	76/11/23	SED	DOM	19S.38E.04.243323	3612.00	YT	59	720	0	0					0
110	TDS	85/02/14	SED	NOT	19S.38E.04.243323	3612.00	YT	120	1030	0	0	0385				0
0	TDS	73/03/17	GWR	DOM	19S.38E.04.24333	0.00	YT	46	610	0	0					0
0	TDS	57/08/14	SED	DOM	19S.38E.04.244443	3613.00	YT	48	0	0	0					0
0	TDS	76/11/23	SED	DOM	19S.38E.04.244443	3613.00	YT	78	774	0	0					0
0	TDS	79/10/18	SED	DOM	19S.38E.04.244443	3613.00	YT	74	778	0	66					0
0	TDS	84/11/16	SED	DOM	19S.38E.04.244443	3613.00	YT	67	969	0	0	1284				0
0	TDS	90/05/21	SED	DOM	19S.38E.04.244443	3613.00	YT	133	1020	0	0	1190				0
0	TDS	57/08/12	SED	DOM	19S.38E.04.42423	3612.00	YT	96	0	0	0					0
0	TDS	76/11/18	SED	DOM	19S.38E.04.42423	3612.00	YT	87	747	0	0					0
0	TDS	79/10/17	SED	DOM	19S.38E.04.42423	3612.00	YT	184	907	0	0					0
0	TDS	84/11/16	SED	DOM	19S.38E.04.42423	3612.00	YT	356	1511	0	0	1284				0
100	TDS	57/08/14	SED	DOM	19S.38E.05.212422	3622.00	YT	112	0	0	0				Z5-13276	0
100	TDS	76/11/17	SED	DOM	19S.38E.05.212422	3622.00	DP	133	1364	0	0				Z5-13276	0
100	TDS	84/09/26	SED	DOM	19S.38E.05.212422	3622.00	YT	76	791	0	0	1084			Z5-13276	0
0	TDS	57/08/12	SED	DOM	19S.38E.05.221213	3620.00	DP	80	0	0	0					0
0	TDS	57/08/12	SED	DOM	19S.38E.05.221223	3620.00	YT	64	0	0	0					0
0	TDS	57/08/14	SED	DOM	19S.38E.05.223224	0.00	YT	96	0	0	0					0
0	TDS	62/02/29	OCC	DOM	19S.38E.05.24441	0.00	YT	78	0	0	0	I		F		0
0	TDS	76/11/23	SED	DOM	19S.38E.05.24441	0.00	YT	102	1387	0	0					0
0	TDS	79/10/18	SED	STK	19S.38E.06.2233113	3633.00	DP	90	1043	0	66				Z5-12294	0
0	TDS	84/11/09	SED	STK	19S.38E.06.2233113	3633.00	DP	81	827	0	63				Z5-12294	0
0	TDS	90/07/12	SED	STK	19S.38E.06.2233113	3633.00	DP	100	875	0	64				Z5-12294	0
0	TDS	93/08/29	SED	STK	19S.38E.06.2233113	3633.20	DP	76	640	0	0				Z5-12294	
0	TDS	79/10/11	SED	DOM	19S.38E.10.2142443	3601.00	YT	220	1644	0	0					0
0	TDS	84/11/29	SED	DOM	19S.38E.10.2142443	3601.00	YT	257	1872	0	0	1284				0
0	TDS	90/07/12	SED	DOM	19S.38E.10.2142443	3601.00	YT	276	1707	0	0	1190				0
0	TDS	93/08/22	SED	DOM	19S.38E.10.2142443	3601.00	YT	288	1800	0	0					0
195	TDS	79/11/07	SED	IRR	19S.38E.15.111113	3620.00	DP	80	872	0	67				Z5-12492	0
100	TDS	79/12/20	SED	IRR	19S.38E.15.41214	3594.00	DP	188	1348	0	0					0
100	TDS	79/12/20	SED	DOM	19S.38E.15.412321	3594.00	DP	186	1049	0	0					0
100	TDS	84/11/29	SED	DOM	19S.38E.15.412321	3594.00	YT	276	1331	0	0	1284				0
100	TDS	90/07/12	SED	DOM	19S.38E.15.412321	3594.00	YT	450	1989	0	0	1190				0
100	TDS	93/08/22	SED	DOM	19S.38E.15.412321	3594.00	YT	480	2460	0	0					0
0	TDS	84/11/29	SED	DOM	19S.38E.15.412322	3594.00	YT	284	1602	0	0					0
0	TDS	84/11/12	GWR	DOM	19S.38E.15.41413	3595.00	YT	158	1175	0	0					0
0	TDS	79/11/20	SED	DOM	19S.38E.15.422444	3600.30	YT	186	1405	0	66					0
123	TDS	77/08/17	SED	DOM	19S.38E.15.424233	3600.00	DP	504	2370	0	82	0877				0

BSNNUM	BASIN	FILNUM	FILSUF	REFBSN	REFNUM	REFSUF	SUBFILE	PRIMM	PRIDD	PRIYY	STATUS	USE	SOURCE	TOWN	RANGE	SECTION	QUARTER	LNTOWN	LNRANGE	LNSEC	CARDATE	BLOCK	METER	NAME
07	L	01450						05	27	1952	PMT	OWD		20S	37E	05	130	20S	37E	05	0654	69		MARATHON OIL CO
07	L	09779						01	08	1926	PMT	DOM		20S	37E	05	222	20S	37E	05	0186	69		DAVIS DOLORES MAS
07	L	02488						02	11	1954	PMT	OWD		20S	37E	05	230	20S	37E	05	0764	69		TEXAS COMPANY THE
07	L	05447		L	05447			08	06	1964	CAN	NOT		20S	37E	05	230	20S	37E	05	0775	69		COOPER BROS
07	L	01572						09	19	1952	PMT	OWD		20S	37E	05	331	20S	37E	05	0664	69		EXPLORATION DRG CO
07	L	02497						03	10	1954	PMT	OWD		20S	37E	05	333	20S	37E	05	0764	69		AMERADA PETRO CORP
07	L	02501						07	15	1954	PMT	OWD		20S	37E	05	333	20S	37E	05	0764	69		AMERADA PETRO CORP
07	L	02102						03	23	1953	PMT	OWD		20S	37E	05	340	20S	37E	05	0764	69		MORAN OIL PROD & D
07	L	02278						07	09	1953	PMT	DOM	SHA	20S	37E	05	430	20S	37E	05	0693	69		REEVES ELSIE M ET AL
07	L	03810						03	12	1958	PMT	OWD		20S	37E	06	140	20S	37E	06	0764	69		THE TEXAS CO
7	L	02801						02	07	1955	PMT	OWD		20S	37E	06	233	20S	37E	06	0764	69		AMERADA PETRO CORP
7	L	02420						11	27	1953	PMT	OWD		20S	37E	06	3423	20S	37E	06	0776	69		MORAN DRILLING CO
7	L	01145						06	20	1951	PMT	OWD		20S	37E	06	414	20S	37E	06	0664	69		GULF OIL CORP
7	L	01467						07	14	1952	PMT	NOT		20S	37E	06	414	20S	37E	06	0464	69		GULF OIL CORP
7	L	04619						03	31	1961	PMT	OWD		20S	37E	06	423	20S	37E	06	1064	69		GULF OIL CORP
7	L	02553						03	14	1954	PMT	OWD		20S	37E	06	434	20S	37E	06	0764	69		AMERADA PETRO CORP
7	L	02460						01	15	1954	PMT	OWD		20S	37E	07	210	20S	37E	07	0764	69		MORAN OIL PROD
7	L	02533						04	21	1954	PMT	OWD		20S	37E	07	230	20S	37E	07	0764	69		MORAN OIL PROD
7	L	04652						12	07	1961	DOM	NOT		20S	37E	07	310	20S	37E	07	1064	69		COOPER MRS TOMMIE
7	L	02274						07	09	1953	PMT	OWD		20S	37E	08	130	20S	37E	08	0764	69		SINCLAIR OIL & GAS
7	L	02483						02	17	1954	PMT	OWD		20S	37E	08	144	20S	37E	08	0764	69		MORAN OIL PROD DRG

05995				07	27	1966	PMT	DOM	19S	37E	30	442	19S	37E	30	1068	64		STEPHENS H L
03815				03	14	1958	PMT	DOM	19S	37E	31	111	19S	37E	31	0964	64		BYRD W C
04804				02	09	1962	PMT	DOM	19S	37E	31	111	19S	37E	31	1064	64		BYRD W C
01271				10	18	1951	PMT	DOM	19S	37E	31	224	19S	37E	31	0564	64		GULF OIL CORP
10031				10	12	1988	PMT	STK SHA	19S	37E	31	24	19S	37E	31	1088	64		COOPER JIMMY B
05296				11	21	1963	PMT	DOM	19S	37E	31	240	19S	37E	31	1164	64		JORDON C R
05579				03	22	1965	PMT	DOM	19S	37E	31	240	19S	37E	31	0765	64		JORDON C R
06497				04	01	1969	PMT	DOM	19S	37E	31	240	19S	37E	31	0569	64		JORDAN C R
05304				12	11	1963	LIC	IRR	19S	37E	31	244	19S	37E	31	0566	64		JORDON C R
06746				12	16	1970	PMT	DWD	19S	37E	31	334	19S	37E	31	0771	64		MORAN OIL PROD DFG
01267				10	19	1951	PMT	NOT	19S	37E	31	414	19S	37E	31	0564	64		GULF OIL CORP
05098				04	01	1963	CAN	NOT	19S	37E	31	420	19S	37E	31	0672	64		JORDON C R
05095				03	28	1963	CAN	NOT	19S	37E	31	440	19S	37E	31	1064	64		JORDON C R
05525	L	05525		01	14	1965	CAN	NOT	19S	37E	32	110	19S	37E	32	0672	64		ROBERTS ALTON
01492				03	26	1969	PMT	DOM	19S	37E	32	110	19S	37E	32	0569	64		CLARK VERNON
[illegible]				[illegible]	[illegible]	[illegible]	PMT	DOM	19S	37E	32	200	19S	37E	32	0964	64		WATSON A G

IN FILNUM FILSUF REFBSN REFNUM REFSUF SUBFILE FRIMM FRIDD FRIYY STATUS USE SOURCE TOWN RANGE SECTION QUARTER LNTOWN LNRANGE LNSEC CARDATE BLOCK METER NAME

03760				12	14	1956	PMT	DOM	19S	37E	32	212	19S	37E	32	0864	64		MONUMENT METHODIST
04823				02	20	1962	PMT	DOM	19S	37E	32	220	19S	37E	32	1064	64		COOPER JINNIE T
05411	L	05411	Y	03	29	1965	PMT	MUN	19S	37E	32	220	19S	37E	32	0765	64		MONUMENT WATER WEFRS COOP

L	[redacted]	L	[redacted]	[redacted]	[redacted]	29	[redacted]	[redacted]	MUN[redacted]	1[redacted]E	[redacted]	2[redacted]	19[redacted]	37E	[redacted]	[redacted]	[redacted]	[redacted] MONUMENT WATER USERS [redacted]
L	00010				05	00	1925	DCL	IRR	19S	37E	32	240	19S	37E	32	0364	64	ANDERSON E A
L	05049				02	19	1963	PMT	STK	19S	37E	32	300	19S	37E	32	1064	64	BARBER J DELL
L	03938				07	24	1958	PMT	DOM	19S	37E	32	400	19S	37E	32	0964	64	PATE ROBERT L
L	01817				01	14	1953	DEN	NOT	19S	37E	32	410	19S	37E	32	0664	64	COLLINS V F
L	05135				05	02	1963	CAN	NOT	19S	37E	32	410	19S	37E	32	0776	64	JOHNSTON EDWIN
L	07230	L	05135		05	28	1974	CAN	NOT	19S	37E	32	410	19S	37E	32	1279	64	JOHNSTON EDWIN
L	07626				11	10	1976	LIC	IRR	19S	37E	32	411	19S	37E	32	1279	64	JOHNSTON EDWIN
L	01256				10	19	1951	PMT	NOT	19S	37E	32	443	19S	37E	32	0564	64	GULF OIL CORP
L	09692				06	06	1965	PMT	DOM	19S	37E	33	1	19S	37E	33	0685	64	TAYLOR DAREL
L	10397				04	27	1994	PMT	DOM SHA	19S	37E	33	1	19S	37E	33	0494	64	MORROW ELMER
L	06796				04	16	1971	PMT	DCS	19S	37E	33	210	19S	37E	33	0771	64	NORTHERN NAT GAS
L	04405				04	01	1960	PMT	DOM	19S	37E	33	300	19S	37E	33	1064	64	TILLEY M D
L	04606				02	10	1962	PMT	DOM	19S	37E	33	300	19S	37E	33	1064	64	COLBERT JAMES A
L	04309				02	13	1962	PMT	DOM	19S	37E	33	300	19S	37E	33	1064	64	CLARK VERNON A
L	04929				07	01	1962	PMT	DOM	19S	37E	33	300	19S	37E	33	1064	64	WELCH I A
L	03993				09	08	1959	PMT	DOM	19S	37E	33	330	19S	37E	33	0964	64	HAMMER J A
L	04821				02	21	1962	PMT	DOM	19S	37E	33	330	19S	37E	33	1064	64	ADAMS EUGOY
L	04822				02	21	1962	PMT	DOM	19S	37E	33	330	19S	37E	33	1064	64	BARNES E D
L	04842				03	14	1962	PMT	DOM	19S	37E	33	330	19S	37E	33	1064	64	ROGERS ROSCOE
L	09126				07	16	1963	PMT	DOM	19S	37E	33	331	19S	37E	33	0383	64	WILLIAMS JOE R
L	04819				02	23	1962	PMT	DOM	19S	37E	33	331	19S	37E	33	1064	64	GLENN E R
L	04820				02	21	1962	PMT	DOM	19S	37E	33	331	19S	37E	33	1064	64	HAMMER BILL A
L	01702				01	26	1953	PMT	STK	19S	37E	33	333	19S	37E	33	0764	64	SPEARS CLYDE

L	01249			10	18	1931	FMT	NOT	20S	36E	13	432	20S	36E	13	0564	68	GULF OIL CORP
L	04507			08	19	1960	FMT	DWD	20S	36E	14	230	20S	36E	14	1064	68	CONTINENTAL OIL CO
L	10135			06	21	1970	FMT	STK SHA	20S	36E	14	24	20S	36E	14	0690	68	COOPER JIM
L	04506			08	18	1960	FMT	DWD	20S	36E	14	330	20S	36E	14	1064	68	CONTINENTAL OIL CO
L	06667	L		04	27	1970	FMT	STK	20S	36E	14	411	20S	36E	14	0771	68	COOPER BROS
L	10252					1931	DCL	DOM SHA	20S	36E	15	24	20S	36E	15	0492	68	KLEIN FAYE L
L	06986			08	28	1972	FMT	DOM	20S	36E	15	422	20S	36E	15	0872	68	KLEIN EDWARD H
L	06432	L	06432 S	11	27	1968	DEN	NOT	20S	36E	18	111	20S	36E	18	0775	68	LEA CO WATER ASSOC
L	02564			07	09	1954	FMT	DWD	20S	36E	26	144	20S	36E	26	0764	68	AMERADA PETRO CORP
L	02552			05	14	1954	FMT	DWD	20S	36E	34	249	20S	36E	34	0764	68	LEE R D
L	02540			05	10	1954	WDW	NOT	20S	36E	34	243	20S	36E	34	0764	68	AMERADA PETRO CORP
L	08066			00	00	1945	DCL	STK	20S	37E	01	200	20S	37E	01	0684	69	S S H CATTLE CO
L	05686			07	14	1965	FMT	DWD	20S	37E	03	323	20S	37E	03	0765	69	KING CARL B DBA CO
L	10067			04	10	1969	FMT	STK	20S	37E	04	11	20S	37E	04	0489		COOPER JIMMIE
L	05960			00	00	1948	DCL	DOM SHA	20S	37E	04	341	20S	37E	04	0693	69	REEVES ELSIE N ET AL

02274					07	09	1953	FMT	DWD		20S	37E	08	130	20S	37E	08	0764	69	SINCLAIR OIL & GAS
02463					02	17	1954	FMT	DWD		20S	37E	08	144	20S	37E	08	0764	69	MORAN OIL PROD DRG
02139					04	03	1953	FMT	DWD		20S	37E	08	222	20S	37E	08	0764	69	GACKLE DRG CO INC
07619	S4	L	07619	U.	10	08	1976	FMT	IRR		20S	37E	08	230	20S	37E	09	1279	69	COOPER JIMMY
01253					07	23	1953	FMT	DWD		20S	37E	08	231	20S	37E	08	0564	69	GULF OIL CORP
[illegible]	[illegible]	[illegible]	[illegible]		[illegible]	[illegible]	[illegible]	[illegible]	[illegible]		[illegible]	[illegible]	[illegible]	[illegible]	[illegible]	[illegible]	[illegible]	[illegible]	[illegible]	[illegible]
[illegible]					[illegible]	[illegible]	[illegible]	[illegible]	[illegible]		[illegible]	[illegible]	[illegible]	[illegible]	[illegible]	[illegible]	[illegible]	[illegible]	[illegible]	[illegible]

SIN	FILNUM	FILSUF	REFBSN	REFNUM	REFSUF	SUBFILE	FRIMM	FRIDD	FRIYY	STATUS	USE	SOURCE	TOWN	RANGE	SECTION	QUARTER	LNTOWN	LNRANGE	LNSEC	CARDATE	BLOCK	METER	NAME
07620	S5	L		07620			05	17	1978	PEU	COM		20S	37E	08	2441	20S	37E	08	0884	69		COOPER JIMMY
07619	S2	L		07619			10	18	1976	FMT	IRR		20S	37E	08	320	20S	37E	08	1279	69		COOPER JIMMY
02463							01	21	1954	FMT	DWD		20S	37E	08	321	20S	37E	08	0764	69		AMERADA PETRO CORP
09590							11	21	1984	FMT	IGM		20S	37E	08	4	20S	37E	08	1184	69		COOPER JIMMY
07619	3	L		07619			10	06	1974	FMT	COM		20S	37E	08	4114	20S	37E	09	0394	69		COOPER JIMMY
09594							00	00	1936	FMT	DOM	SHA	20S	37E	08	42	20S	37E	08	0290	69		COOPER JIMMY
09590							11	26	1984	LIC	COM	SHA	20S	37E	08	42	20S	37E	08	0892	69		COOPER JIMMY
09594							00	00	1936	DOL	NOT	SHA	20S	37E	08	42	20S	37E	08	0290	69		COOPER JIMMY
09594							11	26	1984	DAM	NOT	SHA	20S	37E	08	42*	20S	37E	08	0290	69		COOPER JIMMY
07619		L		07619	5		10	08	1976	FMT	COM		20S	37E	08	4224	20S	37E	08	0394	69		COOPER JIMMY
[illegible]		L		[illegible]			[illegible]	[illegible]	[illegible]	[illegible]	[illegible]		20S	37E	[illegible]	110	[illegible]	[illegible]	[illegible]	[illegible]	[illegible]		[illegible]
00031		L		00030			05	04	1935	LIC	NOT		20S	37E	09	110*	20S	37E	09	0364	69		LEA COUNTY WATER
[illegible]		L		[illegible]			[illegible]	[illegible]	[illegible]	[illegible]	[illegible]		20S	37E	[illegible]	110*	20S	37E	[illegible]	0364	[illegible]		LEA COUNTY WATER
[illegible]		L		[illegible]			[illegible]	[illegible]	1935	LIC	NOT		20S	37E	09	110*	20S	37E	09	0364	69		LEA COUNTY WATER
00034		L		00030			05	04	1935	LIC	NOT		20S	37E	09	110*	20S	37E	09	0364	69		LEA COUNTY WATER