BOYD OPERATING COMPANY
BLAKE FEDERAL #1
Sec. 2, T-9-S, R-26-E
Chaves County, New Mexico

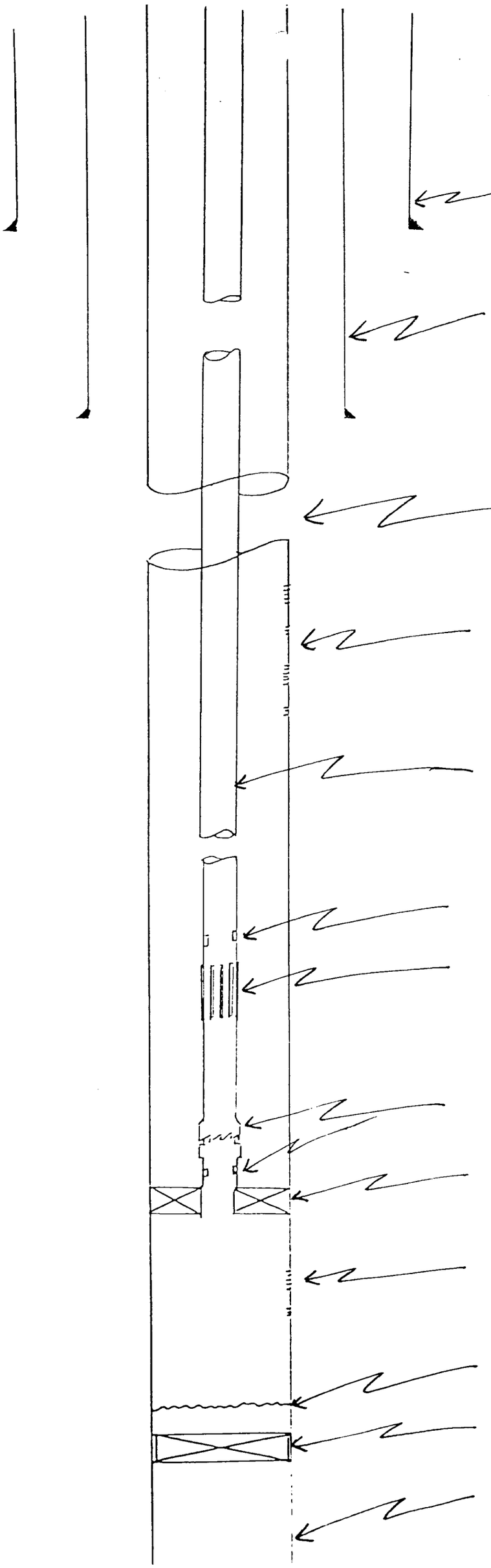

13 3/8", 48# (centralizer-btm joint) set @ 312' K.B. Cemented w/300 sx. Class C w/2% $CaCl_2$. Circulated 75 sx.

8 5/8", 24# (3centralizers, 2 baskets) set @ 1576' K.B. Cemented w/775 sx. HowcoLite & Class "C". Circulated 30 sx.

Top of cement @ 3600'.

Abo Perforations - 2 jets/ft.
4198-4210
4272-4276
4323-4333
4340-4344

2 3/8" E.U.E. Tubing.

1.87" Profile Nipple @ 5189'.

Baker Sliding Sleeve @ 5190'.

Baker on-Off Mandrel @ 5217 w/1.78" Profile.

Baker Lok-Set Packer @ 5218'.

Wolfcamp Perforations - 2 jets/ft.
5334-5344
5376-5380

P.B.T.D. - 5525'.

Bridge Plug at 5560' w/35' cement.

4 1/2" 10.5# set @ 5700'. Centralizers & scratchers from 4150-4350, 5300-5350 & 5600-5650. Baskets @ 4200 & 5100'. Cemented w/625 sx. Class C 50-50 Pozmix, 8# Salt, 2# gel & 1/4# flocele.