BLOWOUT CONTROL EQUIPMENT.....AMOCO PRODUCTION CO.....PAVO MESA #1

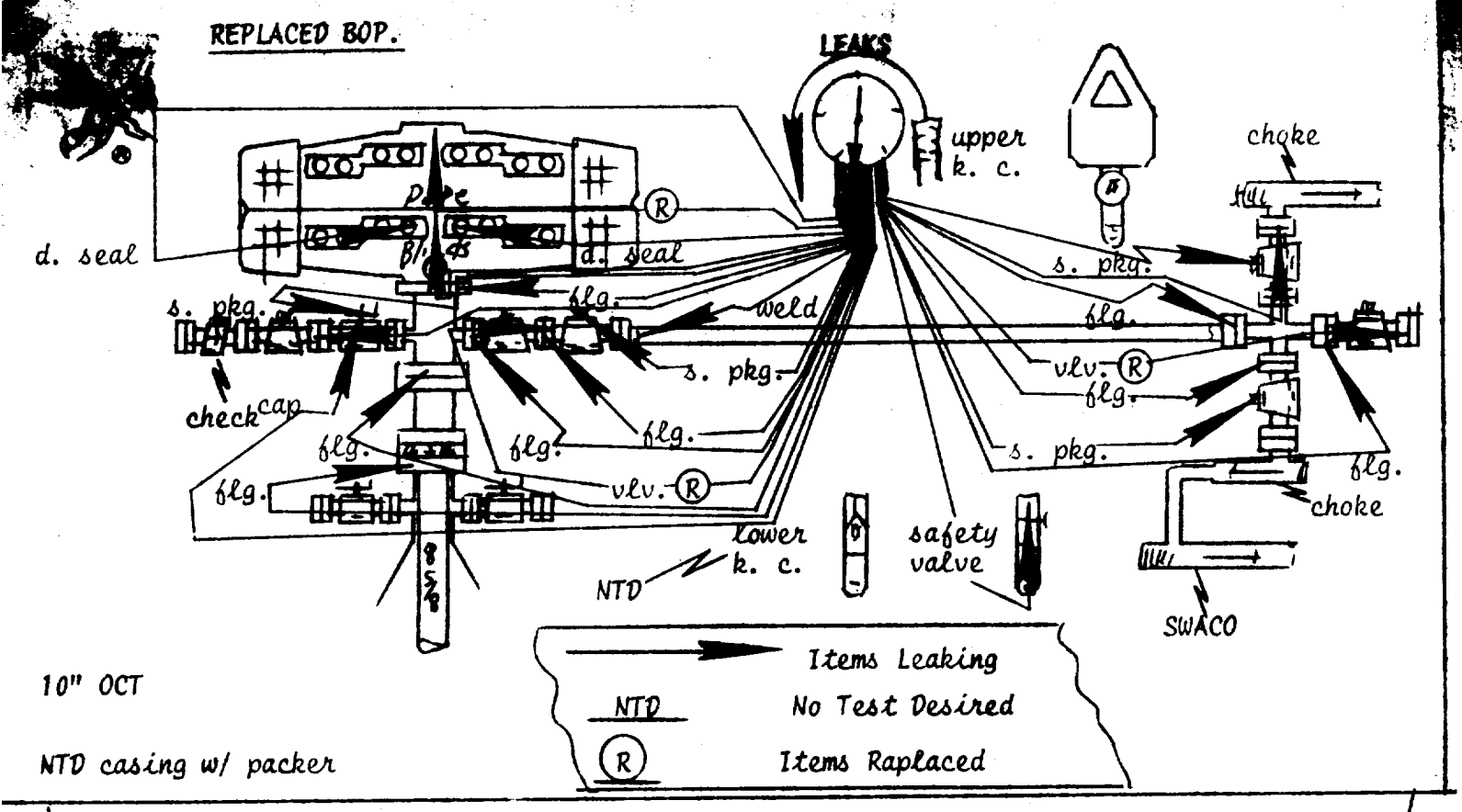

Items Leaking DURING Testing 6/21/74

BLOWOUT CONTROL EQUIPMENT.....AMOCO PRODUCTION CO.....PAVO MESA #1

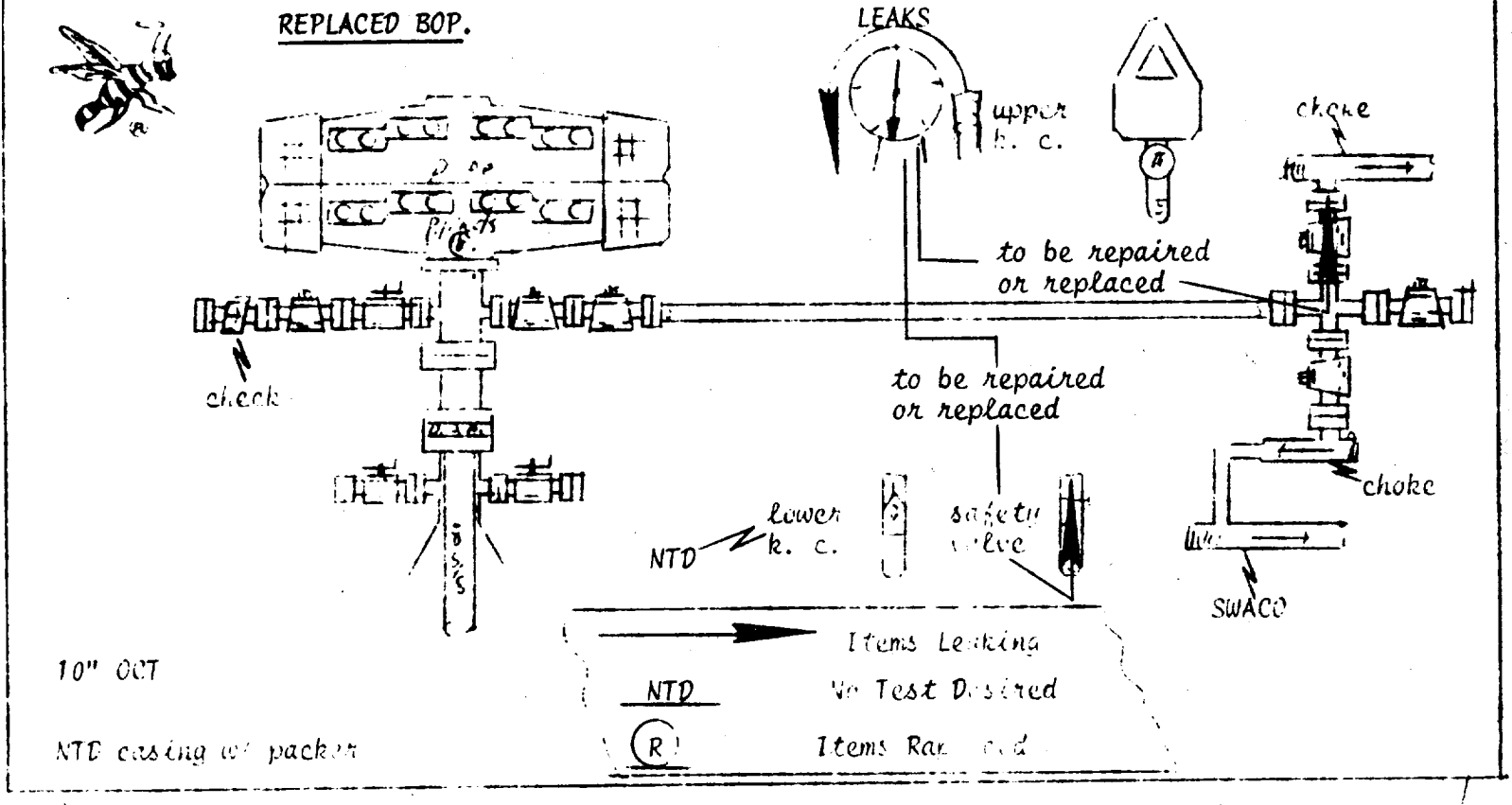

Items Leaking at the CONCLUSION of Testing 6/21/74