DRAWING NO. 4
Revised April, 1971

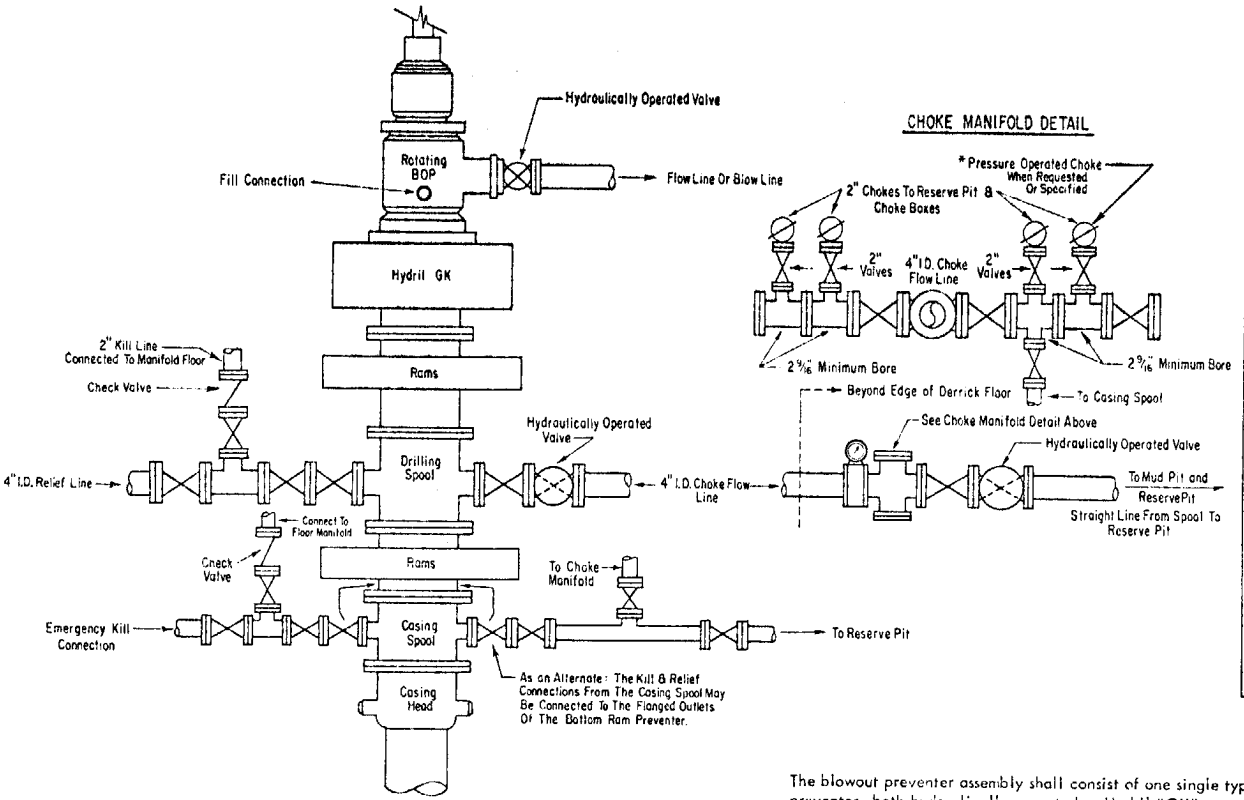

ADDITIONS-DELETIONS-CHANGES SPECIFY

5000# PSI WORKING PRESSURE BLOWOUT PREVENTER HOOK-UP

The blowout preventer assembly shall consist of one single type blind ram preventer and one single type pipe ram preventer, both hydraulically operated; a Hydril "GK" preventer; a rotating blowout preventer, valves; chokes and connections, as illustrated. If a tapered drill string is used, a ram preventer must be provided for each size of drill pipe. Casing and tubing rams to fit the preventers are to be available as needed. If correct in size, the flanged outlets of the ram preventer may be used for connecting to the 4-inch I.D. choke flow line and 4-inch I.D. relief line, except when air or gas drilling. All preventer connections are to be open-face flanged.

Minimum operating equipment for the preventers and hydraulically operated valves shall be as follows: (1)Multiple pumps, driven by a continuous source of power, capable of fluid charging the total accumulator volume from the nitrogen precharge pressure to its rated pressure within_____ minutes. Also, the pumps are to be connected to the hydraulic operating system which is to be a closed system. (2) Accumulators with a precharge of nitrogen of not less than 750 PSI and connected so as to receive the aforementioned fluid charge. With the charging pumps shut down, the pressurized fluid volume stored in the accumulators must be sufficient to close all the pressure-operated devices simultaneously within____ seconds, after closure, the remaining accumulator pressure shall be not less than 1000 PSI with the remaining accumulator fluid volume at least_____ percent of the original. (3) When requested, an additional source of power, remote and equivalent, is to be available to operate the above pumps; or there shall be additional pumps operated by separate power and equal in performance capabilities.

The closing manifold and remote closing manifold shall have a separate control for each pressure-operated device. Controls are to be labeled, with control handles indicating open and closed positions. A pressure reducer and regulator must be provided for operating the Hydril preventer. When requested, a second pressure reducer shall be available to limit operating fluid pressures to ram preventers. Gulf Legion No. 38 hydraulic oil, an equivalent or better, is to be used as the fluid to operate the hydraulic equipment.

The choke manifold, choke flow line, relief line, and choke lines are to be supported by metal stands and adequately anchored. The choke flow line, relief line, and choke lines shall be constructed as straight as possible and without sharp bends. Easy and safe access is to be maintained to the choke manifold. If deemed necessary, walkways and stairways shall be erected in and around the choke manifold. All valves are to be selected for operation in the presence of oil, gas, and drilling fluids. The choke flow line valves and relief line valves connected to the drilling spool and all ram type preventers must be equipped with stem extensions, universal joints if needed, and hand wheels which are to extend beyond the edge of the derrick substructure. All other valves are to be equipped with handles.

* To include derrick floor mounted controls.