PERRY R. BASS

BASS STATE COMMUNITIZED 1

PROPOSED DUAL COMPLETION STRAWN AND MORROW

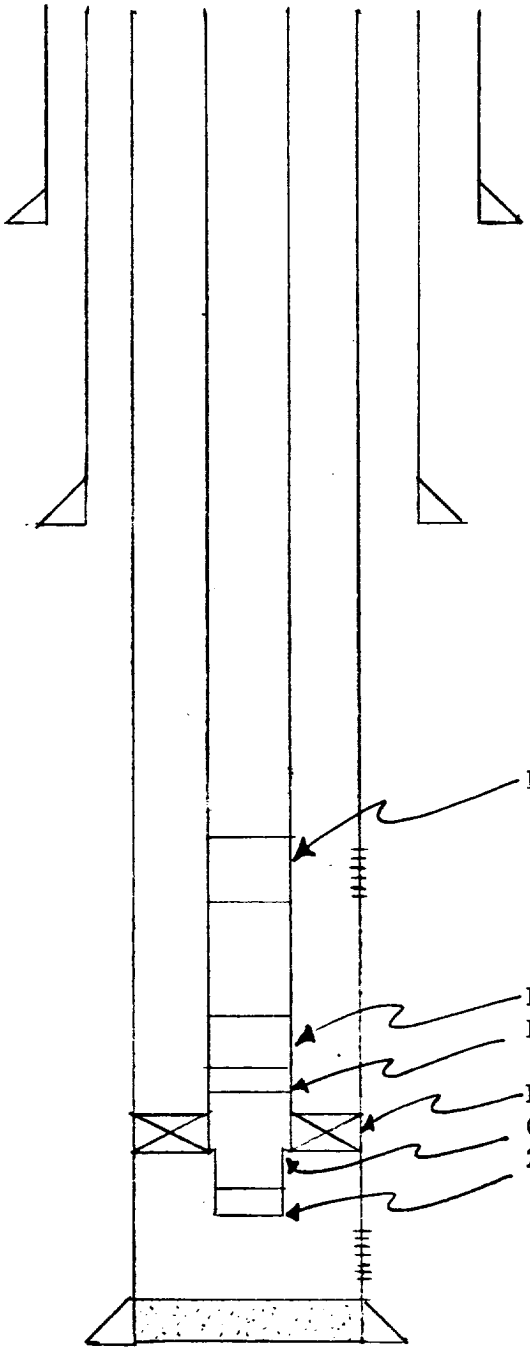

13-3/8" OD 48#/ft. H-40 Casing Set @ 622'
with 650 sacks cement & 36 yards Redimix.

9-5/8" OD 40# K-55 Casing Set @ 2931' with
1425 sacks cement-Circulated out 200 sacks.

Baker Blast Joint

Strawn Perforations:
10321, 10324, 10326, 10328, 10330, 10332, 10335,
10337, 10352, 10354, 10356, 10377, 10378, 10379.

Baker Sliding Sleeve
Baker 2-7/8" x 2.25" "F" Nipple
Top Morrow 10,888' (-7574)
Baker Production Retainer
One Joint 2-3/8" Tubing
2-3/8" x 1.81" Baker "F" Nipple

Morrow Perforations: 11447, 11449, 11451, 11453,
11455, 11457, 11503, 11504, 11506, 11507, 11515,
11517, 11545, 11546, 11548, 11550, 11552, 11556.

7" 29-26-23#/ft. Casing Set @ 11,700' with 900
sacks of Class H Cement.

RLT/jar
8-22-74