Completion Date	Field	Lease & Well #
5/84	UNDES. AVALON	BURTON FLAT "C" FEDERAL No. 3

Elevation	Nature of Work
3203' GR	P&A WELL

Zero	

Perforations Before Workover	Reservoir Before Workover
N/A	T&A

Perforations After Workover	Reservoir After Workover
N/A	P&A

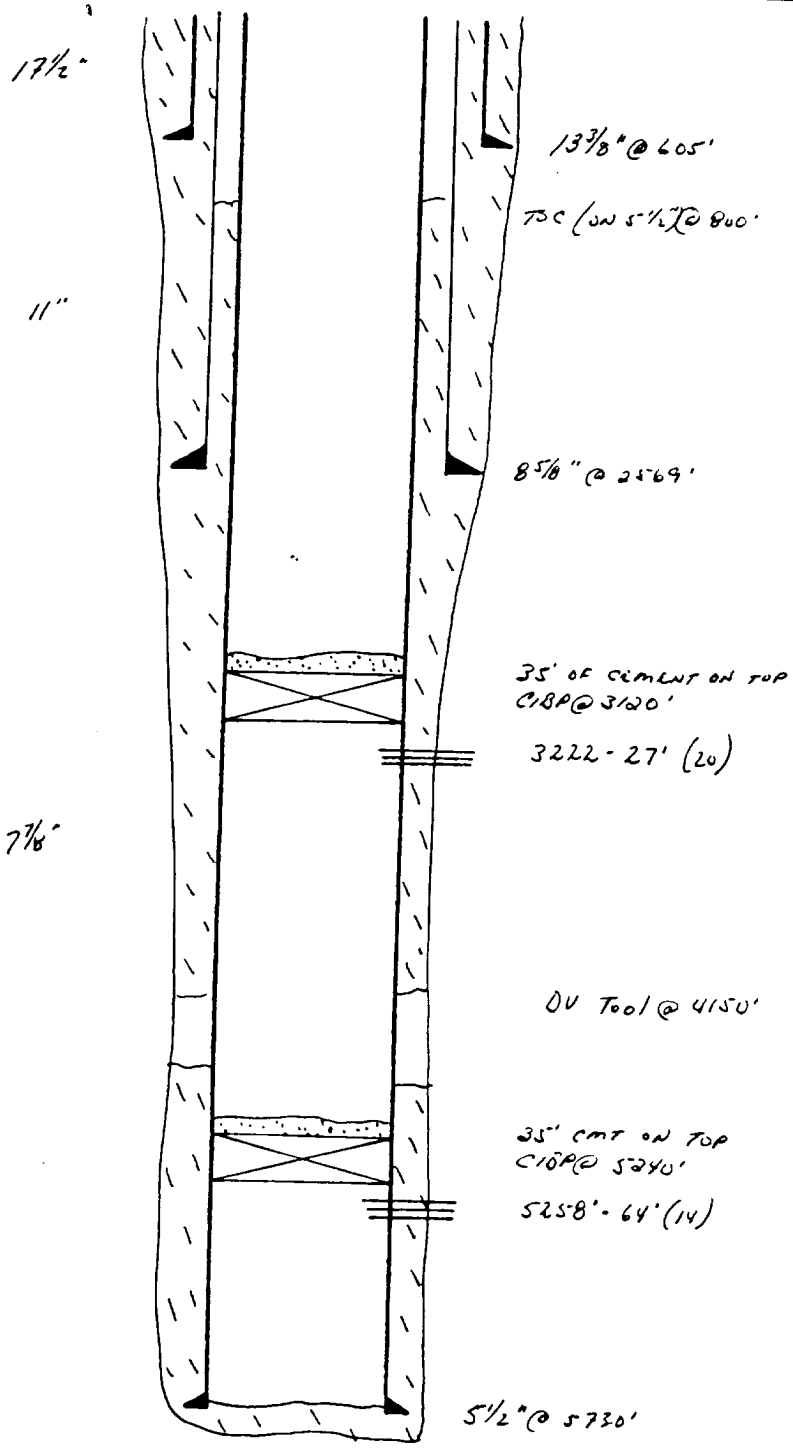

CASING RECORD

O.D.	WT/FT	GRADE	SET AT
SURFACE CASING			
8⅝"	24#	K55	2569'
13⅜"	48#		605'
PRODUCTION CASING			
5½"	17#	K55	5730

MIN. CASING I.D. | MIN. LINER I.D.

TUBING

NO. JTS.	O.D.	THD	TYPE	WT.	GDE.	SET AT
20	2⅞"	8RD	IPE			

TUBING TALLY DATED

BEFORE

T.D. 5740'

DATE REVISED RMA 10/2/87