BLOWOUT CONTROL EQUIPMENT... .....MORRIS R. ANTWEIL.... .....SAIK #1

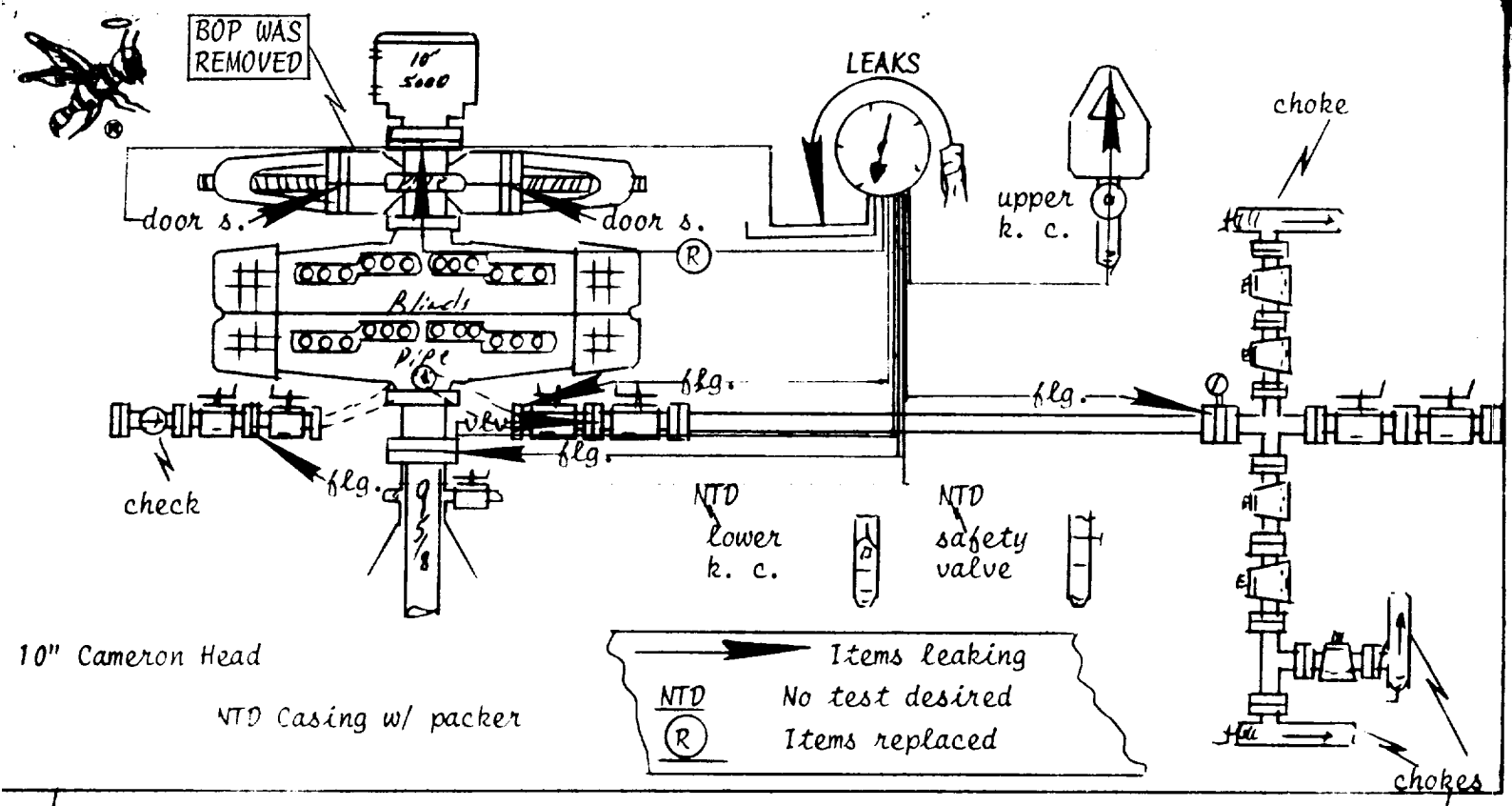

Items Leaking DURING Testing 1/19/74

BLOWOUT CONTROL EQUIPMENT.....MORRIS R. ANTWEIL.....SAIK #1

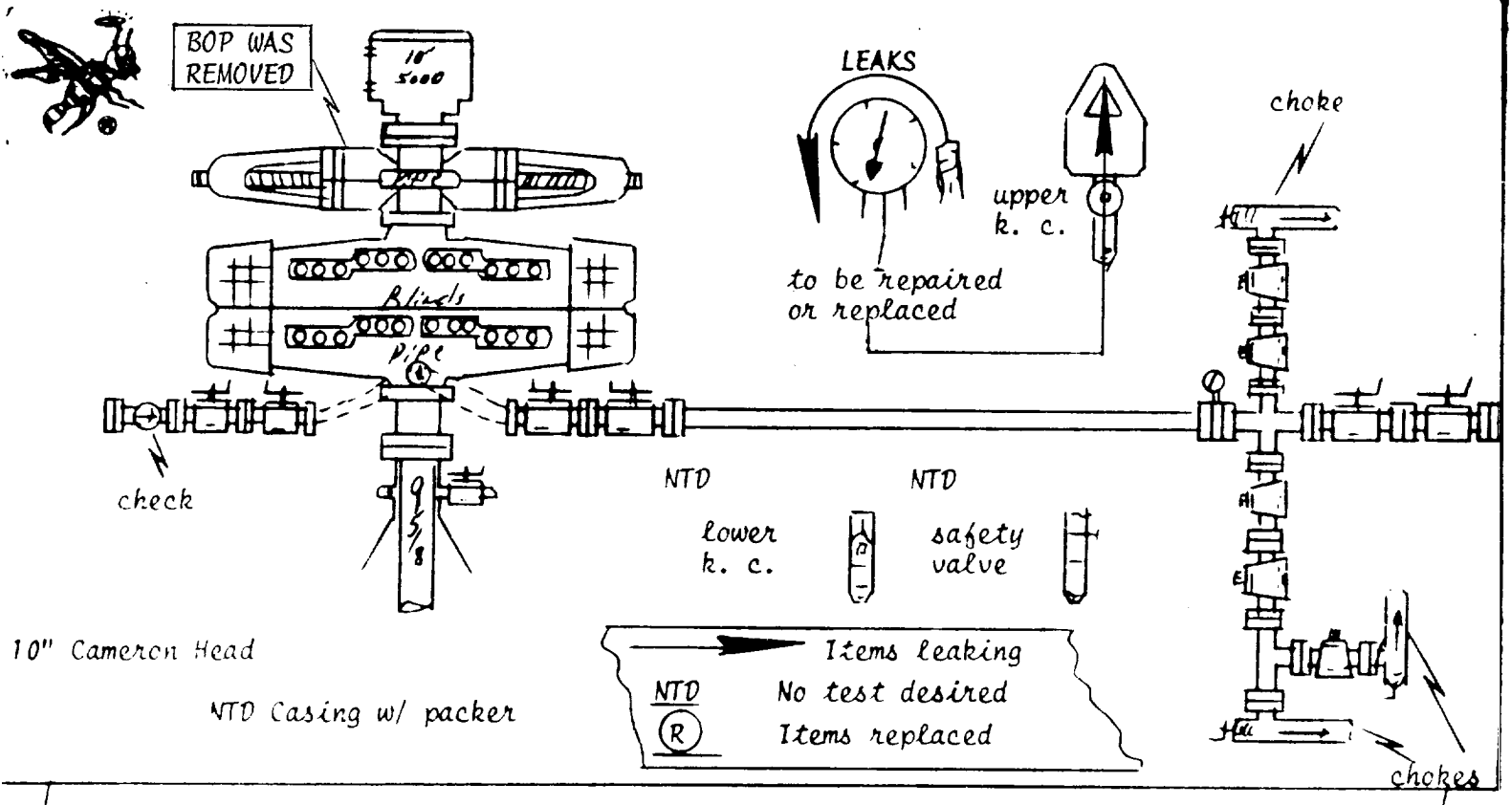

Items Leaking at the CONCLUSION of Testing 1/19/74