James Ranch Unit
#11-E-36-22-30
Eddy Co., N.M.
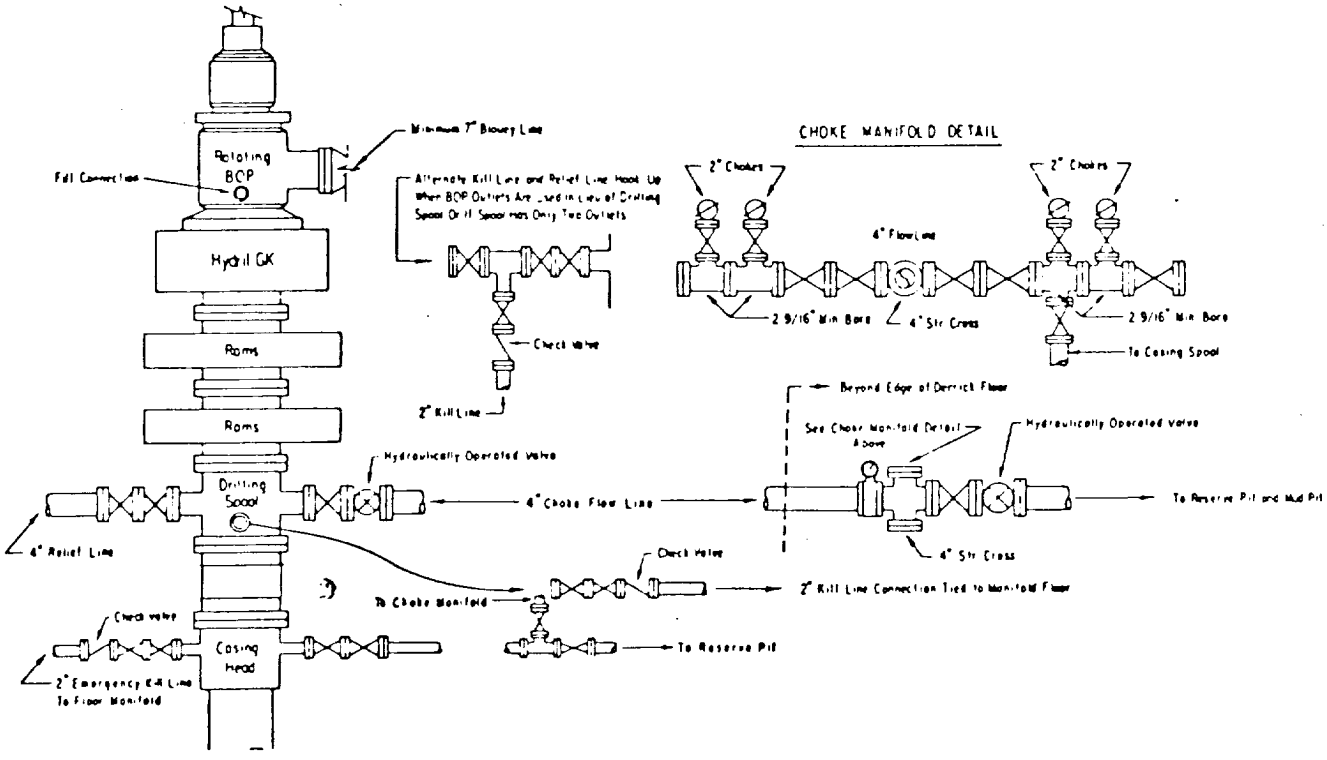
5,000# Working Press BOPE