8 5/8 CASING

PROPOSED 3-M BOPE AI CHOKE ARRANGEMENT

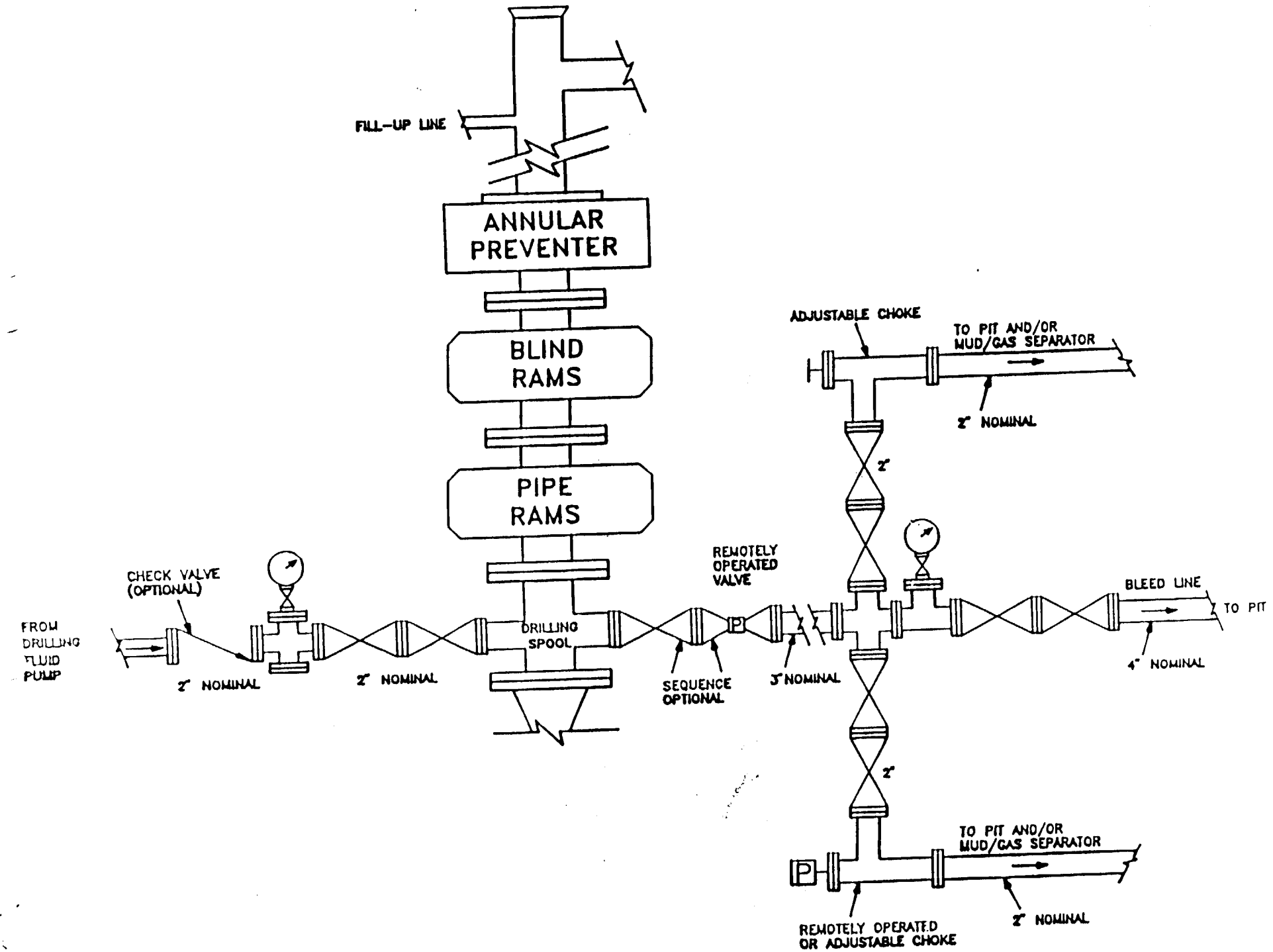

Exhibit IA