Current WBD

bp

Gallegos Canyon Unit 222E
DK / GP
API # 30-045-26192
Sec 12, T28N, R13W
San Juan County, NM

GL 5678'
KB 5693'

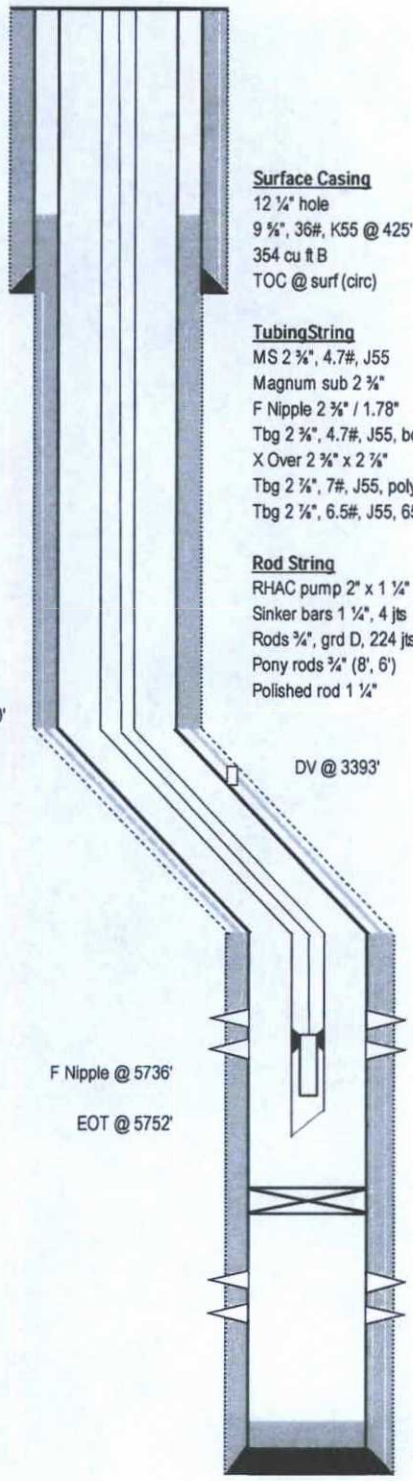

Surface Casing
12 ¼" hole
9 ⅝", 36#, K55 @ 425'
354 cu ft B
TOC @ surf (circ)

TubingString	Length (ft)
MS 2 ⅜", 4.7#, J55	15
Magnum sub 2 ⅜"	1
F Nipple 2 ⅜" / 1.78"	1
Tbg 2 ⅜", 4.7#, J55, boronized, 2 jts	65
X Over 2 ⅜" x 2 ⅞"	1
Tbg 2 ⅞", 7#, J55, polylined, 119 jts	3707
Tbg 2 ⅞", 6.5#, J55, 65 jts	1951

Rod String	Length (ft)
RHAC pump 2" x 1 ¼"	14
Sinker bars 1 ¼", 4 jts	100
Rods ¾", grd D, 224 jts	5600
Pony rods ¾" (8', 6')	14
Polished rod 1 ¼"	22

KOP @ 2300'

DV @ 3393'

Formation Tops (ft)

Point Lookout	4007
Gallup	5250
Greenhorn	6056
Dakota	6160

GP Perfs
5825 - 5645'
frac w/ 70Q N2 39K galls & 116K # 20/40

F Nipple @ 5736'

EOT @ 5752'

CIBP @ 5812'

DK Perfs
6166 - 6184'
6192 - 6200'
6246 - 6300'
frac w/ 100K gals 70 Q N2 & 155K # 20/40 brady

Production Casing
8 ¾" hole
7", 23#, K55 @ 6398'
stage 1 - 581 cu ft B
stage 2 - 887 cu ft B
TOC @ 300' (temp survey 1985)

PBTD 6364'
TD 6440'