UNITED STATES
DEPARTMENT OF THE INTERIOR
BUREAU OF LAND MANAGEMENT

RCVD DEC21'06
OIL CONS. DIV.
DIST. 3

APPLICATION FOR PERMIT TO DRILL, DEEPEN, OR PLUG BACK

2006 DEC 7 PM 3:52
RECEIVED
070 FARMINGTON NM

1a. Type of Work
DRILL

5. Lease Number
SF-080379A
Unit Reporting Number
NMNM-78416-A-MV

1b. Type of Well
GAS

6. If Indian, All. or Tribe

2. Operator
ConocoPhillips

7. Unit Agreement Name
San Juan 29-6 Unit

3. Address & Phone No. of Operator
PO Box 4289, Farmington, NM 87499
(505) 326-9700

8. Farm or Lease Name

9. Well Number
#71M

4. Location of Well
Surf Unit B (NWNE), 1240' FNL & 1465' FEL,
Bott Unit H (SENE), 1680' FNL & 800' FEL

Latitude 36°' .72953' N
36°'36 43.6985'N
Longitude 107°'.48228' W
107°'28.7648' W

10. Field, Pool, Wildcat
Blanco MesaVerde/Basin DK

11. Sec., Twn, Rge, Mer. (NMPM)
B Sec. 17 T29N, R06W, NMPM

API # 30-039-30133

14. Distance in Miles from Nearest Town
9 Miles to Gobernador

12. County
Rio Arriba

13. State
NM

15. Distance from Proposed Location to Nearest Property or Lease Line
1240'

16. Acres in Lease

17. Acres Assigned to Well
320 acres E/2

18. Distance from Proposed Location to Nearest Well, Drlg, Compl, or Applied for on this Lease

19. Proposed Depth
8036'

20. Rotary or Cable Tools
Rotary

21. Elevations (DF, FT, GR, Etc.)
6743' GL

22. Approx. Date Work will Start

23. Proposed Casing and Cementing Program
See Operations Plan attached

24. Authorized by: Tracey N Monroe
Regulatory Technician

12/6/06
Date

PERMIT NO.

APPROVAL DATE

APPROVED BY D. Mankiewicz TITLE AFM DATE 12/18/06

Archaeological Report submitted seperately
Enviromental Assessment is attached.

✓ HOLD C104 FOR directional survey

NOTE: This format is issued in lieu of U.S. BLM Form 3160-3
Title 18 U.S.C. Section 1001, makes it a crime for any person knowingly and willfully to make to any department or agency of the United States any false, fictitious or fraudulent statements or presentations as to any matter within its jurisdiction.

This is not an HPA well

This action is subject to technical and procedural review pursuant to 43 CFR 3165.3 and appeal pursuant to 43 CFR 3165.4

NMOCD
B 12/22/06

DRILLING OPERATIONS AUTHORIZED ARE SUBJECT TO COMPLIANCE WITH ATTACHED "GENERAL REQUIREMENTS".

District I
PO Box 1980, Hobbs, NM 88241-1980

District II
PO Drawer DD, Artesia, NM 88211-0719

District III
1000 Rio Brazos Rd., Aztec, NM 87410

District IV
PO Box 2088, Santa Fe, NM 87504-2088

State of New Mexico
Energy, Minerals & Natural Resources Department

OIL CONSERVATION DIVISION
PO Box 2088
Santa Fe, NM 87504-2088

2006 DEC 7 PM 3 02

RECEIVED

Form C-102
Revised February 21, 1994
Instructions on back
Submit to Appropriate District Office
State Lease - 4 Copies
Fee Lease - 3 Copies

☐ AMENDED REPORT

RCVD DEC21'06
OIL CONS. DIV.
DIST. 3

WELL LOCATION AND ACREAGE DEDICATION PLAT

1 API Number	2 Pool Code	3 Pool Name
30-039- 30133	72319 / 71599	BLANCO MESAVERDE / BASIN DAKOTA

4 Property Code	5 Property Name	6 Well Number
31326	SAN JUAN 29-6 UNIT	71M

7 OGRID No.	8 Operator Name	9 Elevation
217817	CONOCOPHILLIPS COMPANY	6743'

10 Surface Location

UL or lot no.	Section	Township	Range	Lot Idn	Feet from the	North/South line	Feet from the	East/West line	County
B	17	29N	6W		1240	NORTH	1465	EAST	RIO ARRIBA

11 Bottom Hole Location If Different From Surface

UL or lot no.	Section	Township	Range	Lot Idn	Feet from the	North/South line	Feet from the	East/West line	County
H	17	29N	6W		1680	NORTH	800	EAST	RIO ARRIBA

12 Dedicated Acres	13 Joint or Infill	14 Consolidation Code	15 Order No.
320.0 Acres - (E/2)			

NO ALLOWABLE WILL BE ASSIGNED TO THIS COMPLETION UNTIL ALL INTERESTS HAVE BEEN CONSOLIDATED OR A NON-STANDARD UNIT HAS BEEN APPROVED BY THE DIVISION

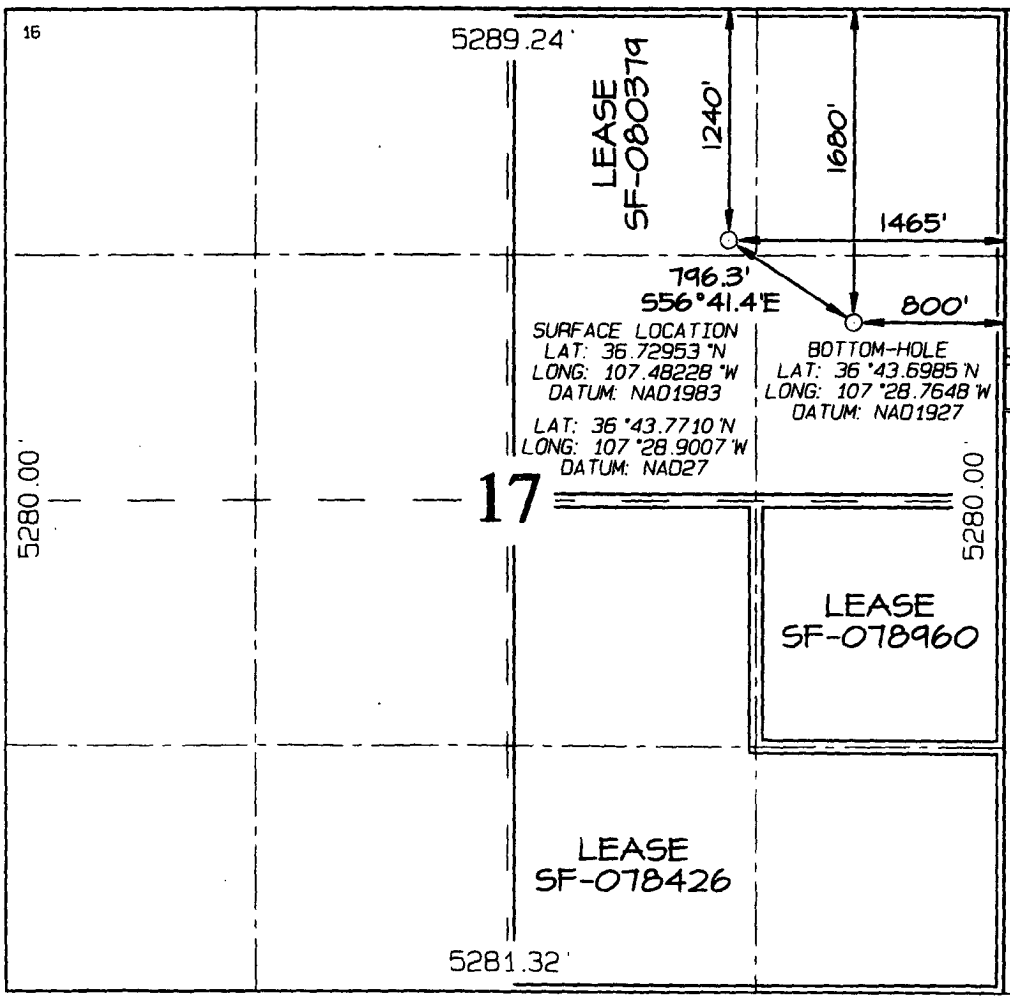

17 OPERATOR CERTIFICATION

I hereby certify that the information contained herein is true and complete to the best of my knowledge and belief

Signature

Virgil E. Chavez

Printed Name

Projects & Operations Lead

Title

September 11 2006

Date

18 SURVEYOR CERTIFICATION

I hereby certify that the well location shown on this plat was plotted from field notes of actual surveys made by me or under my supervision, and that the same is true and correct to the best of my belief

Date of Survey: MAY 18, 2006

Signature and Seal of Professional Surveyor

JASON C. EDWARDS
NEW MEXICO
15269
REGISTERED PROFESSIONAL SURVEYOR

JASON C. EDWARDS

Certificate Number 15269

Submit 3 Copies To Appropriate District Office
District I
1625 N. French Dr., Hobbs, NM 88240
District II
1301 W. Grand Ave., Artesia, NM 88210
District III
1000 Rio Brazos Rd., Aztec, NM 87410
District IV
1220 S. St. Francis Dr., Santa Fe, NM 87505

State of New Mexico
Energy, Minerals and Natural Resources

OIL CONSERVATION DIVISION
1220 South St. Francis Dr.
Santa Fe, NM 87505

Form C-103
May 27, 2004

WELL API NO. 30-039- 30133

5. Indicate Type of Lease STATE ☐ FEE ☐

6. State Oil & Gas Lease No. SF-080379

SUNDRY NOTICES AND REPORTS ON WELLS
(DO NOT USE THIS FORM FOR PROPOSALS TO DRILL OR TO DEEPEN OR PLUG BACK TO A DIFFERENT RESERVOIR. USE "APPLICATION FOR PERMIT" (FORM C-101) FOR SUCH PROPOSALS.)

7. Lease Name or Unit Agreement Name
San Juan 29-6 Unit

1. Type of Well: Oil Well ☐ Gas Well [X] Other

8. Well Number **71M**

2. Name of Operator ConocoPhillips

9. OGRID Number **217817**

3. Address of Operator 3401 E. 30TH STREET, FARMINGTON, NM 87402

10. Pool name or Wildcat **Blanco MV/Basin Dakota**

4. Well Location
Unit Letter **B** : **1240** feet from the **North** line and **1465** feet from the **East** line
Section **17** Township **29N** Range **6W** NMPM County Rio Arriba

11. Elevation *(Show whether DR, RKB, RT, GR, etc.)* **6743'**

Pit or Below-grade Tank Application [X] **or Closure** ☐

Pit type New Drill **Depth to Groundwater** >100' **Distance from nearest fresh water well** <200 **Distance from nearest surface water** <100'
Pit Liner Thickness: 12 mil **Below-Grade Tank:** _____ bbls; **Construction Material** _____

12. Check Appropriate Box to Indicate Nature of Notice, Report or Other Data

NOTICE OF INTENTION TO:				SUBSEQUENT REPORT OF:			
PERFORM REMEDIAL WORK	☐	PLUG AND ABANDON	☐	REMEDIAL WORK	☐	ALTERING CASING	☐
TEMPORARILY ABANDON	☐	CHANGE PLANS	☐	COMMENCE DRILLING OPNS.	☐	P AND A	☐
PULL OR ALTER CASING	☐	MULTIPLE COMPL	☐	CASING/CEMENT JOB	☐		
OTHER:		New Drill Pit	[X]	OTHER:			☐

13. Describe proposed or completed operations. (Clearly state all pertinent details, and give pertinent dates, including estimated date of starting any proposed work). SEE RULE 1103. For Multiple Completions: Attach wellbore diagram of proposed completion or recompletion.

New Drill, Lined:

ConocoPhillips proposes to construct a new drilling pit, an associated vent/flare pit and a pre-set mud pit (if required). Based on ConocoPhillips' interpretation of the Ecosphere's risk ranking criteria, the new drilling pit and pre-set mud pit will be lined pits as detailed in ConocoPhillips' General Plan dated June 2005 on file at the NMOCD office. A portion of the vent/flare pit will be designed to manage fluids and that portion will be lined as per the risk ranking criteria. ConocoPhillips anticipates closing these pits according to the November 1, 2004 Guidelines.

I hereby certify that the information above is true and complete to the best of my knowledge and belief. **I further certify that any pit or below-grade tank has been/will be constructed or closed according to NMOCD guidelines** ☐, **a general permit** [X] **or an (attached) alternative OCD-approved plan** ☐.

SIGNATURE Tracey N Monroe TITLE **Regulatory Technician** DATE **12/6/2006**

Type or print name **Tracey N. Monroe** E-mail address Tracey.N.Monroe@conocophillips.com Telephone No. **505-326-9752**

For State Use Only

APPPROVED BY _____ TITLE DEPUTY OIL & GAS INSPECTOR, DIST. ☐ DATE DEC 22 2006

Conditions of Approval (if any):

CONOCOPHILLIPS COMPANY SAN JUAN 29-6 UNIT #71M
1240' FNL & 1465' FEL, SECTION 17, T29N, R6W, NMPM
RIO ARRIBA COUNTY, NEW MEXICO ELEVATION: 6743'

LATITUDE: 36.72953° N
LONGITUDE: 107.48228° W
DATUM: NAD1983

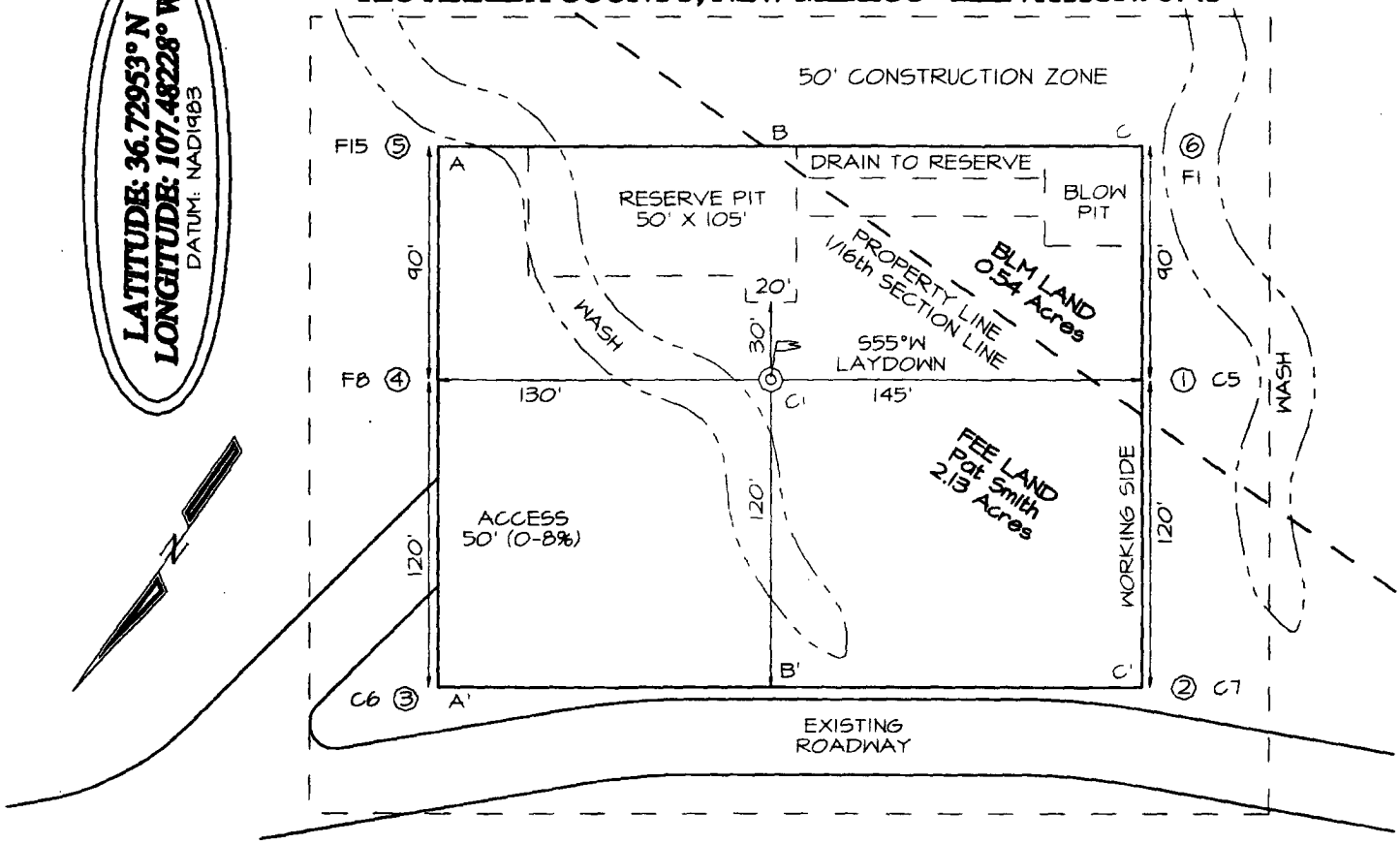

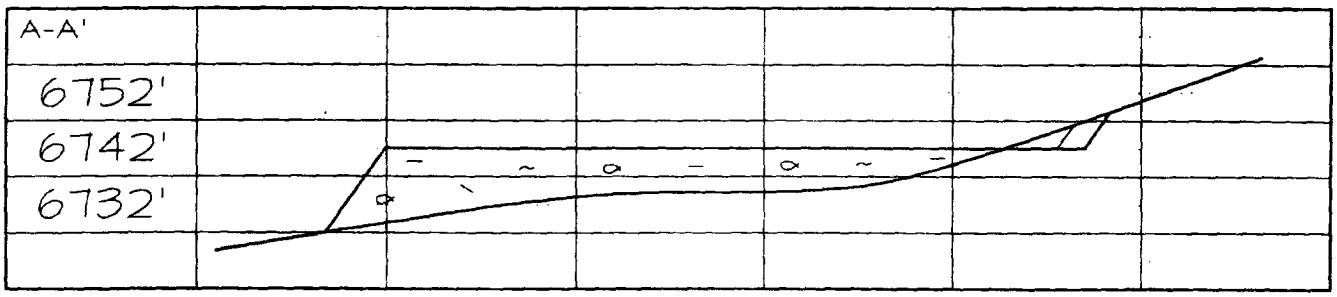

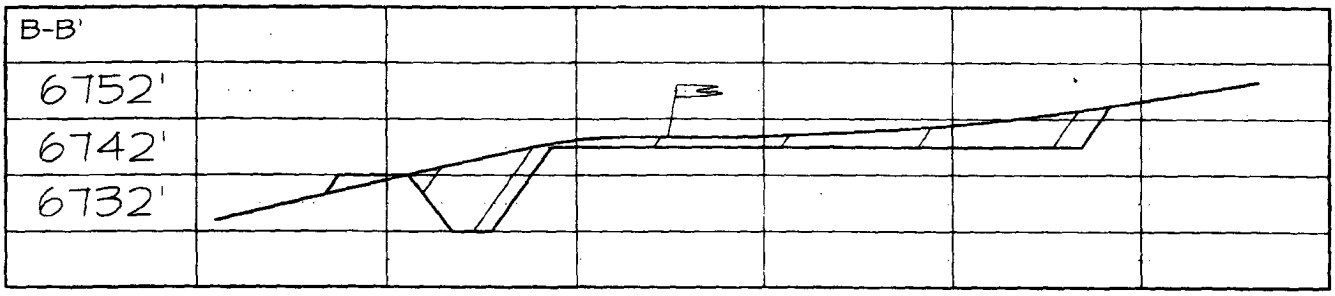

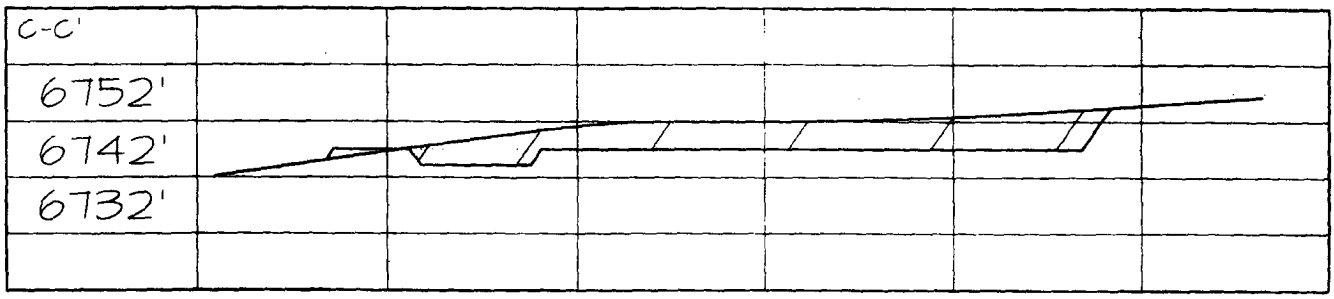

FILENAME: 29617BT	SHEET 2 OF 6	NCE SURVEYS, INC.	DRAWN BY: EDO	CHECKED BY: JCE

ConocoPhillips

San Juan Business Unit

PROJECT PROPOSAL - New Drill / Sidetrack

SAN JUAN 29-6 71M

Lease:	AFE #: WAN.CNV.6195			AFE $:
Field Name: 29-6	Rig:	State: NM	County: RIO ARRIBA	API #:
Geoscientist: Glaser, Terry J	Phone: (832)486-2332	Prod. Engineer:		Phone: 486-2334
Res. Engineer: Johnson, Tom B.	Phone: (832)-486-2347	Proj. Field Lead: Fransen, Eric E.		Phone:

Primary Objective (Zones):

Zone	Zone Name
R20002	MESAVERDE(R20002)
R20076	DAKOTA(R20076)

Location: Surface	Datum Code: NAD 27				**Deviated**
Latitude: 36.729523	Longitude: -107.481675	X:	Y:	Section: 17	Range: 6W
Footage X: 1465 FEL	Footage Y: 1240 FNL	Elevation: 6743	(FT)	Township: 29N	
Tolerance:					

Location: Bottom Hole	Datum Code: NAD 27				**Deviated**
Latitude: 36.728308	Longitude: -107.479413	X:	Y:	Section: 17	Range: 6W
Footage X: 800 FEL	Footage Y: 1680 FNL	Elevation:	(FT)	Township: 29N	
Tolerance:					

Location Type: Year Round | Start Date (Est.): | Completion Date: | Date In Operation:

Formation Data: Assume KB = 6759 Units = FT

Formation Call & Casing Points	Depth (TVD in Ft)	SS (Ft)	Depletion (Yes/No)	BHP (PSIG)	BHT	Remarks
SURFACE CSG	216	6543	☐			13-1/2" or 12-1/4 hole. 9 5/8" 32.3 ppf, H-40, STC casing. Circulate cement to surface.
NCMT	1559	5200	☐			
OJAM	2689	4070	☐			Possible water flows.
KRLD	2840	3919	☐			
FRLD	3257	3502	☐			Possible gas.
PCCF	3623	3136	☐			
LEWS	3878	2881	☐			
Intermediate Casing	3978	2781	☐			8 3/4" Hole. 7", 23 ppf, J-55, LTC Casing. Circulate cement to surface.
CHRA	4628	2131	☐			
CLFH	5401	1358	☐			Gas; possibly wet
MENF	5462	1297	☐			Gas.
PTLK	5791	968	☐			Gas.
GLLP	7109	-350	☐			Gas. Possibly wet.
GRHN	7776	-1017	☐			Gas possible, highly fractured
GRRS	7838	-1079	☐			
TWLS	7955	-1196	☐			Gas
CBBO	7972	-1213	☐			Gas
CBRL	8014	-1255	☐			
TD	8036	-1277	☐			6-1/4" hole. 4-1/2", 11.6 ppf, J-55, LTC and 4-1/2" 10.5 ppf, J-55, STC casing. Circulate cement a minimum of 100' inside the previous casing string. No open hole logs. Cased hole GR with collar locator.

Reference Wells:

Reference Type	Well Name	Comments

Printed on: 10/10/2006 1:14:38 PM

ConocoPhillips

ConocoPhillips

Field: Rio Arriba County, NM
Site: San Juan 29-6-71M
Well: San Juan 29-6 71M
Wellpath: Original Hole
Plan: Plan #1

N

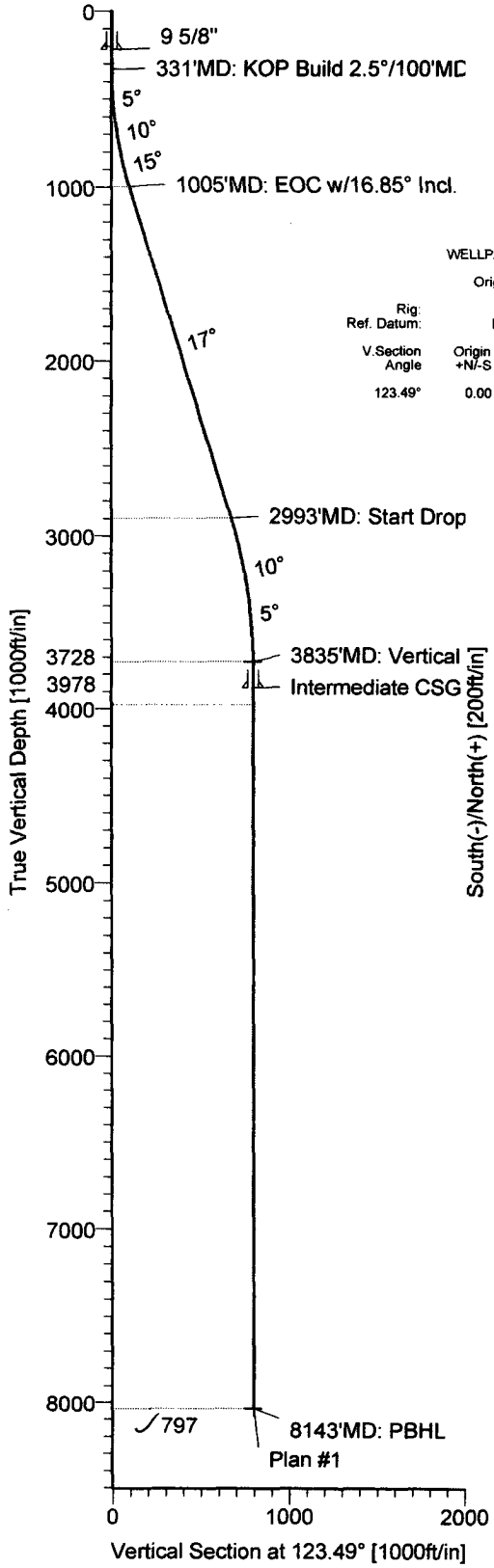

FIELD DETAILS

Rio Arriba County, NM
USA

Geodetic System: US State Plane Coordinate System 1983
Ellipsoid: GRS 1980
Zone: New Mexico, Western Zone
Magnetic Model: igrf2005

System Datum: Mean Sea Level
Local North: Grid North

SITE DETAILS

San Juan 29-6-71M
Blanco Mesaverde / Basin Dakota

Site Centre Latitude: 36°43'46.308N
Longitude: 107°28'56.208W

Ground Level: 6743.00
Positional Uncertainty: 0.00
Convergence: 0.21

WELLPATH DETAILS

Original Hole

Rig:
Ref. Datum: Est. RKB 6759.00ft

V.Section Angle	Origin +N/-S	Origin +E/-W	Starting From TVD
123.49°	0.00	0.00	0.00

CASING DETAILS

No.	TVD	MD	Name	Size
1	216.00	216.00	9 5/8"	9.625
2	3878.00	3985.06	Intermediate CSG	0.000

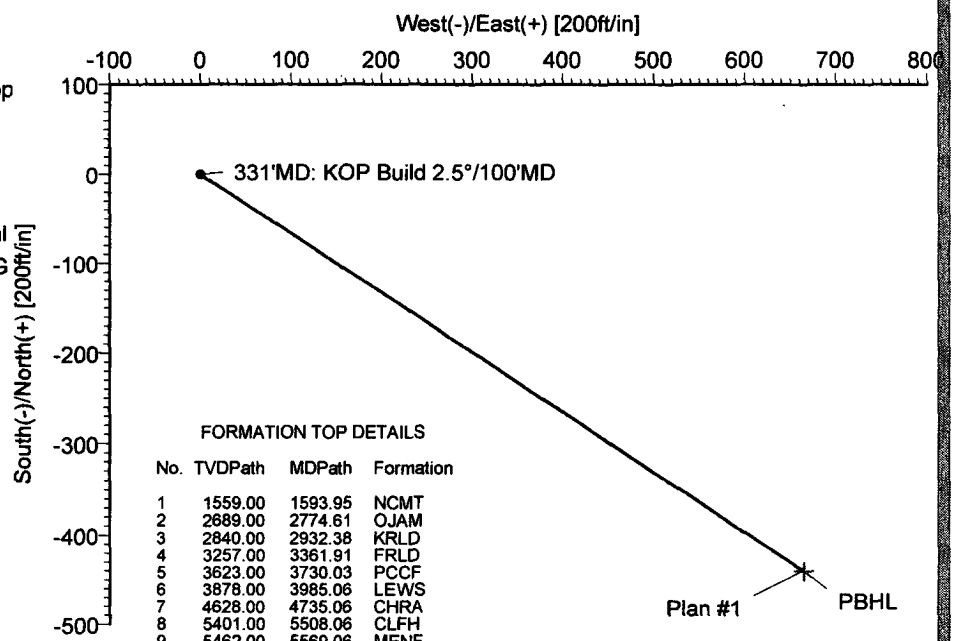

FORMATION TOP DETAILS

No.	TVDPath	MDPath	Formation
1	1559.00	1593.95	NCMT
2	2689.00	2774.61	OJAM
3	2840.00	2932.38	KRLD
4	3257.00	3361.91	FRLD
5	3623.00	3730.03	PCCF
6	3878.00	3985.06	LEWS
7	4628.00	4735.06	CHRA
8	5401.00	5508.06	CLFH
9	5462.00	5569.06	MENF
10	5791.00	5898.06	PTLK
11	7109.00	7216.06	SLLP
12	7776.00	7883.06	GRHN
13	7838.00	7945.06	GRRS
14	7955.00	8062.06	TWLS
15	7972.00	8079.06	CBBO
16	8014.00	8121.06	CBRL
17	8036.00	8143.06	TD

SECTION DETAILS

Sec	MD	Inc	Azi	TVD	+N/-S	+E/-W	DLeg	TFace	VSec	Target
1	0.00	0.00	123.49	0.00	0.00	0.00	0.00	0.00	0.00	
2	216.00	0.00	123.49	216.00	0.00	0.00	0.00	123.49	0.00	
3	331.00	0.00	123.49	331.00	0.00	0.00	0.00	123.49	0.00	
4	1004.84	16.85	123.49	995.18	-54.27	82.02	2.50	123.49	98.35	
5	2992.75	16.85	123.49	2897.78	-372.16	562.47	0.00	0.00	674.45	
6	3835.06	0.00	123.49	3728.00	-440.00	665.00	2.00	180.00	797.39	Vertical Point
7	4085.06	0.00	123.49	3978.00	-440.00	665.00	0.00	123.49	797.39	
8	8143.06	0.00	123.49	8036.00	-440.00	665.00	0.00	123.49	797.39	PBHL

TARGET DETAILS

Name	TVD	+N/-S	+E/-W	Latitude	Longitude	Shape
Vertical Point	3728.00	-440.00	665.00	36°43'41.933N	107°28'48.059W	Point
PBHL	8036.00	-440.00	665.00	36°43'41.933N	107°28'48.059W	Point

Ryan Energy Technology
19510 Oil Center Blvd
Houston, TX 77073
Ph: 281-443-1414
Fx: 281-443-1676

Ryan The leader in UNDERGROUND INTELLIGENCE™

Plan: Plan #1 (San Juan 29-6 71M/Original Hole)
Created By: Charlotte Sims Date: 10/8/2006
Checked _____ Date _____
Reviewed _____ Date _____
Approved _____ Date _____

San Juan 29-6 71M
MD and TVD Formation tops

MD (ft)	TVD (ft)	Formation
0	0	
216	216	Surface Casing
1594	1559	Naciemento
2775	2689	Ojo Alamo
2932	2840	Kirtland
3362	3257	Fruitland
3730	3623	Picture Cliffs
3985	3878	Lewis
4085	3978	Int Casing
4735	4628	Chacra
5508	5401	Cliffhouse
5569	5462	Menefee
5898	5791	Point Lookout
7216	7109	Gallup
7883	7776	Greenhorn
7945	7838	Graneros
8062	7955	Two wells
8079	7972	Cubero
8121	8014	Cubero Lower
8143	8036	TD

San Juan 29-6 71M

APD Cement Calculations

HOLE:	12.25 "
CSG OD:	9.625 "
CSG ID:	9.001 "
WGT:	32.3 ppf
GRADE:	H-40
EXCESS:	125 %
DEPTH:	235'

SURFACE:

Option 1

148 sx	Comp. Strength		
30.8 bbls	6 hrs	250	psi
172.9 cuft	8 hrs	500	psi
1.17 ft^3/sx			psi
15.8 ppg			
4.973 gal/sx			

Class G Cement
+ 3% S001 Calcium Chloride
+ 0.25 lb/sx D029 Cellophane Flakes

Option 2

143 sx	Comp. Strength		
30.8 bbls	6 hrs	250	psi
172.9 cuft	8 hrs	500	psi
1.21 ft^3/sx			
15.6 ppg			
5.29 gal/sx			

Standard Cement
+ 3% Calcium Chloride
+ 0.25 lb/sx Flocele

Option 3

65 sx	Comp. Strength		
18.6 bbls	8 hrs	475	psi
104.3 cuft	24 hrs	1375	psi
1.61 ft^3/sx			
14.5 ppg			
7.41 gal/sx			

Type I-II Ready Mix
+ 20% Fly Ash

HOLE:	8.75 "
CSG OD:	7 "
CSG ID:	6.456 "
WGT:	23 ppf
GRADE:	J-55
EXCESS:	150 %
TAIL:	817'
DEPTH:	4085'

INTERMEDIATE LEAD:

Option 1

434 sx	Comp. Strength		
210.4 bbls	9 hrs	300	psi
1181.4 cuft	48 hrs	525	psi
2.72 ft^3/sx			
11.7 ppg			
15.74 gal/sx			

Class G Cement
+ 3% D079 Extender
+ 0.20% D046 Antifoam
+ 10 lb/sx Phenoseal

Option 2

454 sx	Comp. Strength		
210.4 bbls	1:47 hrs	50	psi
1181.4 cuft	12 hrs	350	psi
2.60 ft^3/sx	24 hrs	450	psi
11.5 ppg			
14.62 gal/sx			

Type III Ashgrove Cement
+ 30 lb/sx San Juan Poz
+ 3% Bentonite
+ 5.0 lb/sx Phenoseal

Option 3

449 sx	Comp. Strength		
210.4 bbls	3 hrs	100	psi
1181.4 cuft	24 hrs	443	psi
2.63 ft^3/sx			
11.7 ppg			
15.92 gal/sx			

Class G Cement
+ 3% D079 Extender
+ 0.20% D046 Antifoam
+ 1.0 lb/bbl CemNet

INTERMEDIATE TAIL:

Option 1

242 sx	Comp. Strength		
56.4 bbls	3:53	500	psi
316.7 cuft	8:22	1000	psi
1.31 ft^3/sx	24 hrs	3170	psi
13.5 ppg	48 hrs	5399	psi
5.317 gal/sx			

50/50 Poz: Class G Cement
+ 0.25 lb/sx D029 Cellophane Flakes
+ 3% S001 Calcium Chloride
+ 2% D020 Bentonite
+ 1.5 lb/sx D024 Gilsonite Extender
+ 0.1% D046 Antifoamer
+ 6 lb/sx Phenoseal

Option 2

238 sx	Comp. Strength		
56.4 bbls	2:05	50	psi
316.7 cuft	4:06	500	psi
1.33 ft^3/sx	12 hrs	1250	psi
13.5 ppg	24hrs	1819	psi
5.52 gal/sx			

50/50 Poz: Standard Cement
+ 2% Bentonite
+ 6.0 lb/sx Phenoseal

Option 3

247 sx	Comp. Strength		
56.4 bbls	24 hrs	1850	psi
316.7 cuft	48 hrs	3411	psi
1.28 ft^3/sx			
13.5 ppg			
5.255 gal/sx			

50/50 Poz: Class G Cement
+ 2% D020 Bentonite
+ 5.0 lb/sx D024 Gilsonite Extender
+ 2% S001 Calcium Chloride
+ 0.1% D046 Antifoamer
+ 0.15% D065 Dispersant
+ 1.0 lb/bbl CemNet

HOLE:	6.25 "
CSG OD:	4.5 "
CSG ID:	4 "
WGT:	10.5/11.6 ppf
GRADE:	J-55
EXCESS:	50 %
DEPTH:	8143'

PRODUCTION:

Option 1

450 sx	Comp. Strength		
115.4 bbls	7 hrs	500	psi
648.2 cuft	24 hrs	2100	psi
1.44 ft^3/sx			
13.0 ppg			
6.47 gal/sx			

50/50 Poz: Class G Cement
+ 0.25 lb/sx D029 Cellophane Flakes
+ 3% D020 Bentonite
+ 1.0 lb/sx D024 Gilsonite Extender
+ 0.25% D167 Fluid Loss
+ 0.25% D065 Dispersant
+ 0.1% D800 Retarder
+ 0.1% D046 Antifoamer
+ 3.5 lb/sx Phenoseal

Option 2

447 sx	Comp. Strength		
115.4 bbls	9:32	50	psi
648.2 cuft	12 hrs	500	psi
1.45 ft^3/sx	13:29	1026	psi
13.1 ppg	24 hrs	2300	psi
6.55 gal/sx			

50/50 Poz: Standard Cement
+ 3% Bentonite
+ 0.2% CFR-3 Friction Reducer
+ 0.1% HR-5 Retarder
+ 0.8% Halad-9 Fluid Loss Additive
+ 3.5 lb/sx Phenoseal

SLDR 10/9/06

San Juan 29-6 71M

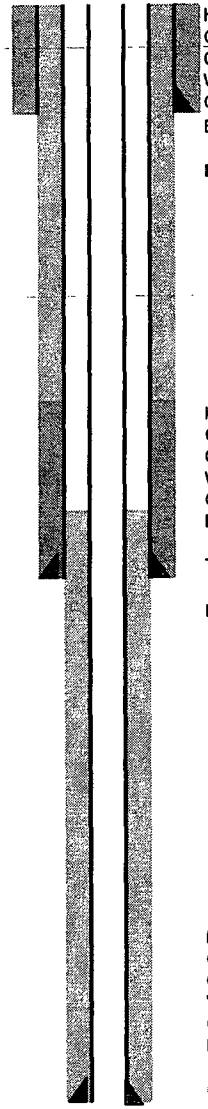

SURFACE:

HOLE:	12.25	"
CSG OD:	9.625	"
CSG ID:	9.001	"
WGT:	32.3	ppf
GRADE:	H-40	
EXCESS:	125	%
DEPTH:	235	'

INTERMEDIATE LEAD:

HOLE:	8.75	"
CSG OD:	7	"
CSG ID:	6.456	"
WGT:	23	ppf
GRADE:	J-55	
EXCESS:	150	%
TAIL:	817	'
DEPTH:	4085	'

Option 4

410	sx	Comp. Strength		
210.4	bbls	1:47	50	psi
1181.4	cuft	12 hrs	350	psi
2.88	ft^3/sx	24 hrs	450	psi
11.5	ppg			
16.85	gal/sx			

Standard Cement
+ 3% Econolite (Extender)
+ 10 lb/sx Phenoseal

Option 5

563	sx	Comp. Strength		
210.4	bbls	10:56	500	psi
1181.4	cuft	42 hrs	1012	psi
2.10	ft^3/sx			
11.7	ppg			
11.724	gal/sx			

75% Type XI / 25% Class G Cement
+ 0.25 lb/sx D029 Cellophane Flakes
+ 3% D079 Extender
+ 0.20% D046 Antifoam

INTERMEDIATE TAIL:

PRODUCTION:

HOLE:	6.25	"
CSG OD:	4.5	"
CSG ID:	4	"
WGT:	10.5/11.6	ppf
GRADE:	J-55	
EXCESS:	50	%
DEPTH:	8143	'

BLOWOUT PREVENTER ARRANGEMENT & PROGRAM

For Drilling to TD and Setting 4.5 inch Casing

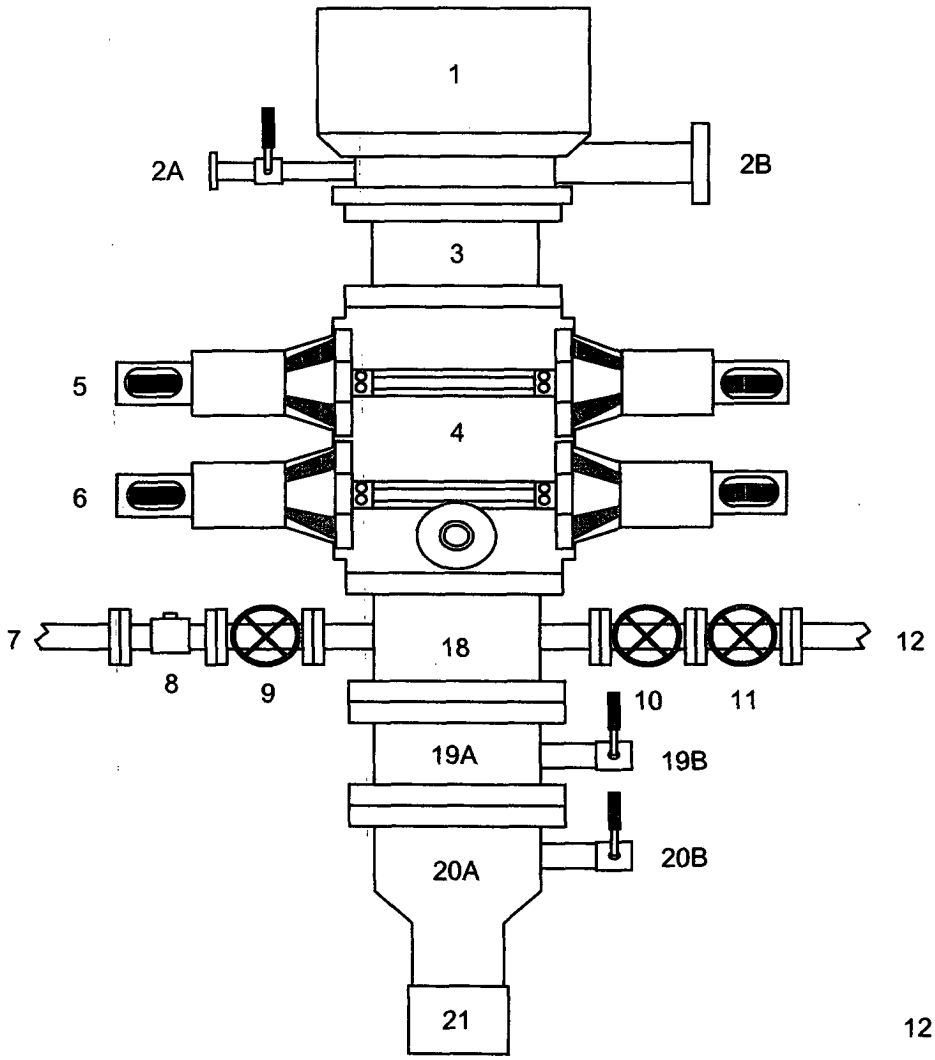

1. Rotating Head
2A. Fill-up Line & valve
2B. Blooie Line (for Air Drilling)
3. Spacer Spool
4. Double Ram BOP (11", 3000 psi)
5. Pipe Rams
6. Blind Rams
7. Kill Line
8. Kill Line Check Valve
9. Kill Line Valve
10 Inner Choke Line Valve (3")
11. Outer Choke Line Valve (3")
12. Choke Line (3")
13. Variable Choke
14. Choke Line Valve (2")
15. Panic Line Valve (3")
16. Choke Manifold Pressure Gauge
17. Choke Line (2")
18. Mud Cross Spacer Spool
19A Csg Spool "B" Section (11", 3M)
19B "B" Section Csg Valve (2", 3M)
20A Csg Head "A" Section (11", 3M)
20B "A" Section Csg Valve (2", 3M)
21. 9 5/8" Casing Collar

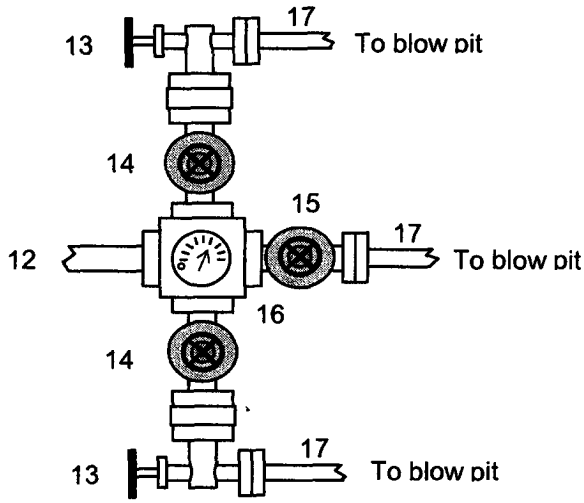

After the 7" intermediate casing has been run and cemented, the Casing Spool ("B" Section) will be installed on the wellhead ("A" Section) and the BOP will be installed on the Casing Spool. A test plug will be set in the wellhead and the pipe rams, blind rams, and choke manifold will be tested to 200 psi to 300 psi (low pressure test) for 10 minutes and to 3000 psi (high pressure test) for 10 minutes. Then the test plug will be removed and the 7" casing will be pressure tested against closed blind rams to 200 psi to 300 psi for 10 minutes and to 1500 psi for 30 minutes - this test pressure is 34% of the minimum internal yield strength of 4360 psi for the 7", 23#, J-55, STC casing. Then we will air drill the 6-1/4" hole to TD and run and cement the 4-1/2" casing.

In addition to the equipment in the above diagram the following equipment will comprise the BOP system:

1. Upper Kelly cock Valve with handle
2. Stab-in TIW valve for all drillstrings in use

Revision Date: September 1, 2004

BLOWOUT PREVENTER ARRANGEMENT & PROGRAM

For Drilling to Intermediate Casing Point & Setting 7" Intermediate Casing

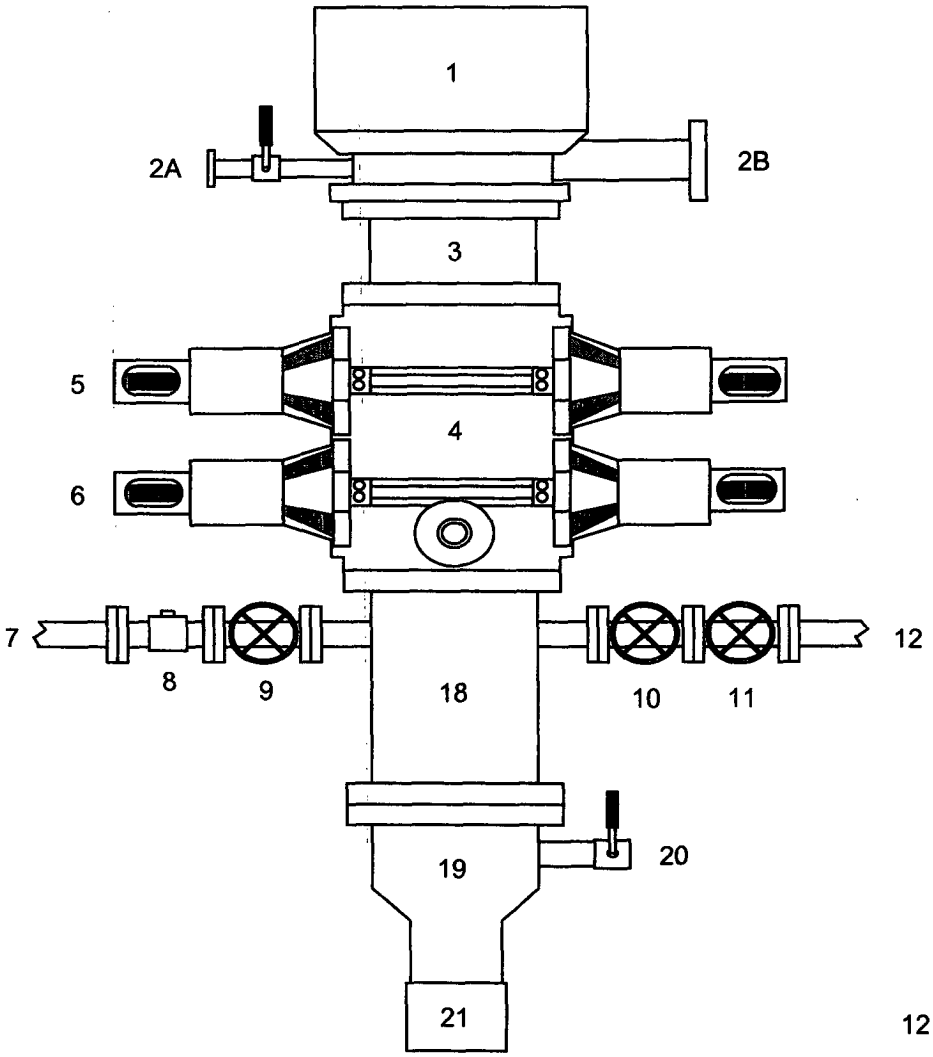

1. Rotating Head
2A. Fill-up Line & valve
2B. Flowline
3. Spacer Spool
4. Double Ram BOP (11", 3000 psi)
5. Pipe Rams
6. Blind Rams
7. Kill Line
8. Kill Line Check Valve
9. Kill Line Valve
10 Inner Choke Line Valve (3")
11. Outer Choke Line Valve (3")
12. Choke Line (3")
13. Variable Choke
14. Choke Line Valve (2")
15. Panic Line Valve (3")
16. Choke Manifold Pressure Gauge
17. Choke Line (2")
18. Mud Cross Spacer Spool
19. Casing Head "A" Section
20. Casing Head "A" Section 2" Valve
21. 9 5/8" Casing Collar

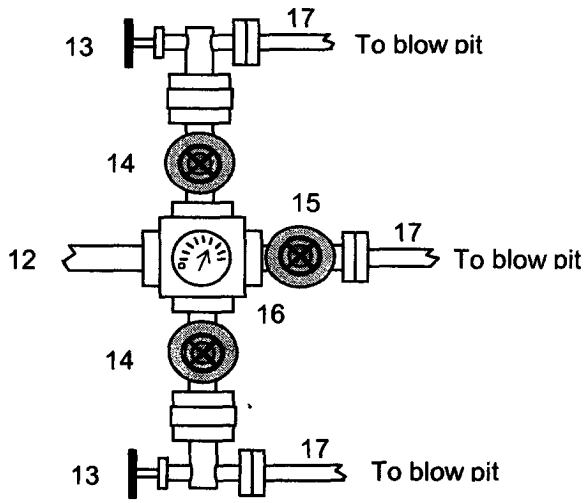

A 13-1/52" or 12-1/4" hole will be drilled to approximately 220' and the 9-5/8" surface casing will be run and cemented. The Casing Head "A" Section will be screwed onto the 9-5/8" surface casing stub. The BOP will be installed on the Casing Head "A" Section. A test plug will be set in the wellhead and the pipe rams and choke manifold will be tested to 200 psi to 300 psi (low pressure test) for 10 minutes and to 1000 psi (high pressure test) for 10 minutes. Then the test plug will be removed, and the **9-5/8" casing will be pressure tested** against closed blind rams to 200 psi to 300 psi for 10 minutes and **to 600 psi for 30 minutes** (this value is 26% of the minimum internal yield pressure of the 9-5/8" casing). (Note: per regulatory requirements we will wait on cement at least 8 hrs after placement before testing the 9-5/8" surface casing). Then an 8-3/4" hole will be drilled to intermediate casing point and 7" intermediate casing will be run and cemented.

In addition to the equipment in the above diagram the following equipment will comprise the BOP system:
1. Upper Kelly cock Valve with handle
2. Stab-in TIW valve for all drillstrings in use

Revision Date: September 1, 2004