NEW MEXICO
OIL CONSERVATION COMMISSION

8-15-56

PACKER LEAKAGE TEST (SAN JUAN BASIN)

Operator Magnolia Petroleum Co. Pool (Upper Completion) Pictured Cliffs
Lease Jicarilla "D" Well No. 8 Pool (Lower Completion) Mesaverde
Location: Unit A, S. 23, T. 26N, R. 3W, Rio Arriba County, N. Mex.

Pre-Test Shut-In

	Upper Completion	Lower Completion
Shut-in (date)	10-10-58	10-10-58
Pressure Measured (Dwt.) (date)	10-17-58	10-17-58

Flow Test No. 1

Test commenced at (hour, date) 10:20 A.M. 10-17-58 Choke size 0.750"
Completion producing Mesaverde Completion shut-in Pictured Cliffs

	Upper Completion		Lower Completion	
Pressure at beginning of test	935	psi	1076	psig
Maximum pressure during test	944	psi	1076	psig
Minimum pressure during test	935	psi	153	psig
Pressure at end of test	944	psi	153	psig
Maximum pressure change during test	+9	psi	-923	psig

Oil flow rate during test: - BOPD based on BO in - hours.
Gas Flow rate during test:
Choke volume 2040 MCFD: Meter volume - mcfd.

Mid-Test Shut-In

	Upper Completion	Lower Completion
Shut-in (date)	10-17-58	10-17-58
Pressure measured (Dwt) (date)	10-24-58	10-24-58

Flow Test No. 2

Test commenced at (hour, date) 12:00 N, 10-24-58 Choke size 0.750"
Completion producing Pictured Cliffs Completion shut-in Mesaverde

	Upper Completion		Lower Completion	
Pressure at beginning of test	931	psi	1289	psig
Maximum pressure during test	931	psi	1299	psig
Minimum pressure during test	144	psi	1289	psig
Pressure at end of test	144	psi	1297	psig
Maximum pressure change during test	-787	psi	+10	psig

Oil flow rate during test: - BOPD based on - BO in - hrs.
Gas flow rate during test:
Choke volume 1929 MCFD: Meter volume - mcfd.

Test performed by William A. Morgan Title Jr. Gas Engineer
Witnessed by - Title -

REMARKS: None

NOTE: Recording gauge pressure charts, test data sheet, and a graphic depiction of all phases of the test shall be submitted with this report.

AFFIDAVIT:

I HEREBY CERTIFY that all conditions prescribed by the Oil Conservation Commission of the State of New Mexico for this packer leakage test were complied with and carried out in full, and that all dates and facts set forth in this form and all attached material are true and correct.

William A. Morgan
(Representative of Company Making Test)

For MAGNOLIA PETROLEUM COMPANY
(Company Making Test)

INSTRUCTIONS

(NORTHWEST NEW MEXICO ONLY)

1. At least seventy-two hours prior to the commencement of this test, the operator shall have notified the Aztec Office of the Oil Conservation Commission in writing of the exact time said test is to be commenced.

2. The packer leakage test shall commence with both sides of the completion shut-in. Both sides of the completion must be shut-in at least seven days. This shut-in must show on the charts of the pressure recorder and also must appear on the data sheets.

3. For Flow Test No. 1, one side of the dual completion shall be produced with the other side shut-in. Such test shall be continued for seven days, and shall be at a rate of flow approximating the normal rate of flow for the zone being produced. Note: Where gas is flowed to the atmosphere in taking the initial packer test, the well shall be flowed for three hours.

4. Following the completion of flow test No. 1, the well will again be shut-in for seven days.

5. Flow Test No. 2 shall be performed with the previously shut-in side of the dual completion flowing and with the flowing side of the completion used in Flow Test No. 1, remaining shut-in. This test shall be conducted exactly as outlined under Flow Test No. 1, and must be performed even though no leak was indicated by Flow Test No. 1.

6. All pressures, throughout the entire test, must be continuously measured and recorded with recording pressure gauges.

7. The accuracy of the recording gauges shall be checked at regular intervals throughout the test with a dead weight test gauge (Dwt), and such readings shall be recorded on the test data sheet provided.

8. This form must be completed and filed in duplicate with the Aztec Office of the Oil Conservation Commission within 15 days following the completion of the testing, and must be accompanied by:

   a. all of the charts, or copies thereof, used on the pressure recorders during the test.

   b. The test data-sheet (s), or copies thereof, required under paragraph 7 above.

   c. a graph depicting the pressures and their changes, for both sides of the completion over the entire test.

9. This packer leakage test shall be performed upon the dual completion of any new wells so approved by the Commission. This test shall also be required each year during the annual deliverability test on gas wells. This test shall be required until such time as the Commission has sufficient information on testing dual completions in San Juan Basin on which to base a simplified packer leakage test. The Commission may also request packer leakage tests at any time they feel that a new test is desirable.

INITIAL PACKER LEAKAGE TEST DATA

Jicarilla "D" Well No. 8

First Half: 10-17-58

Time	Mesaverde Flowing Tubing Press., PSIG	Pictured Cliffs Shut-In Tubing Press., PSIG
10:20 A.M.	1076 Dwt.	935 Dwt.
10:35 "	462 "	942 "
10:50 "	372 "	941 "
11:05 "	321 "	941 "
11:20 "	282 "	942 "
11:50 "	225 "	942 "
12:20 "	193 "	942 "
12:50 "	165 "	943 "
1:20 "	153 "	944 "

Second Half: 10-24-58

Time	Mesaverde Shut-In Tubing Press., PSIG	Pictured Cliffs Flowing Tubing Press., PSIG
12:00 N	1289 Dwt.	931 Dwt.
12:15 P.M.	1289 "	386 "
12:30 "	1289 "	280 "
12:45 "	1293 "	227 "
1:00 "	1293 "	195 "
1:30 "	1294 "	173 "
2:00 "	1299 "	161 "
2:30 "	1297 "	149 "
3:00 "	1297 "	144 "

NEW MEXICO OIL CONSERVATION COMMISSION
SANTA FE, NEW MEXICO

6-1-56

RECEIVED
NOV 6 1958
OIL CON. COM.
DIST. 3

PACKER-SETTING AFFIDAVIT
(Dual Completions)

STATE OF NEW MEXICO)
) ss
County of SAN JUAN)

G. W. WALKER, being first duly sworn according to law, upon his oath deposes and says:

That he is of lawful age and has full knowledge of the facts herein below set out.

That he is employed by MAGNOLIA PETROLEUM COMPANY in the capacity of Production Foreman and as such is its authorized agent.

That on September 26, 1958, he personally supervised the setting of a Baker Model "D" (Make and Type of Packer) in Magnolia Petroleum Company (Operator)'s Jicarilla "D" (lease) Well No. 8, located in Unit Letter "A", Section 23, Township 26N, Range 3W, NMPM, Rio Arriba County, New Mexico.

That said packer was set at a subsurface depth of 5460 feet, said depth measurement having been furnished by Western Company.

That the purpose of setting this packer was to effect a seal in the annular space between the two strings of pipe where the packer was set so as to prevent the commingling, within the well-bore, of fluids produced from a stratum below the packer with fluids produced from a stratum above the packer. That this packer was properly set and that it did, when set, effectively and absolutely seal off the annular space between the two strings of pipe where it was set in such manner as that it prevented any movement of fluids across the packer.

MAGNOLIA PETROLEUM COMPANY
(Company)

G. W. Walker
(its Agent) G. W. Walker

Subscribed and sworn to before me this the 2nd day of October, AD, 1958.

Mary Estell Scott
Notary Public in and for the County of San Juan.

My Commission Expires My Commission Expires July 18, 1962.

MAGNOLIA PETROLEUM COMPANY
JICARILLA "B" WELL #8
BLANCO MESAVERDE AND UNDESIGNATED PICTURED CLIFFS
RIO ARRIBA COUNTY, NEW MEXICO

ELEVATION: 7303' Ground Level

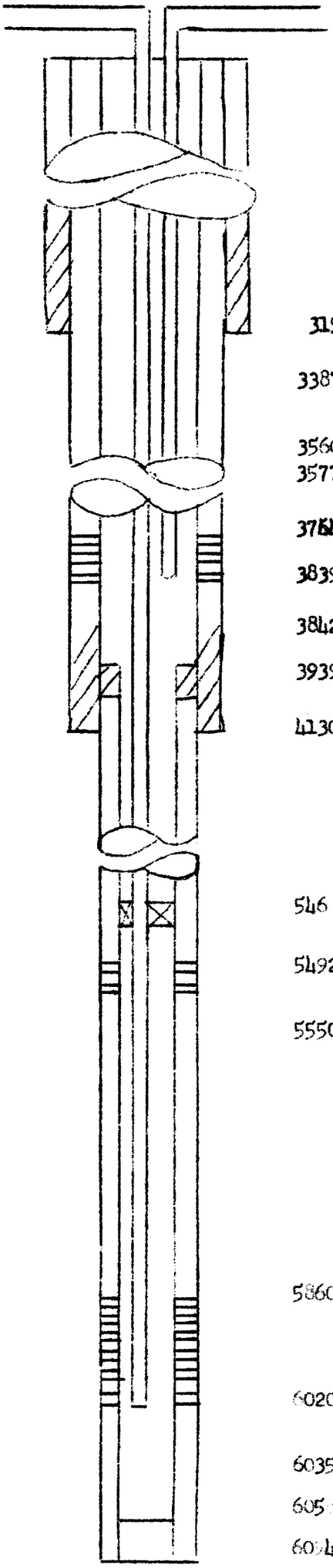

319' - 10-3/4" casing set with 240 sks cement

3387' - Top of Ojo Alamo

3560' - Top of cement

3577' - Top of Kirtland Fruitland

3764' - Top of Pictured Cliffs

3839' - Bottom of 2" Tubing

3842' - Top of Lewis

3939' - Top of 5" liner and top of cement

4130' - 7-5/8" Csg. set with 125 sks cement

Perforated 7-5/8" Csg. w/78 Shots
3764-83
3790-96
3827-41

546 ' - Baker Model "D" Production Packer

5492' - Top of Cliffhouse

5550' - Top of Menefee

Perforated 5" Liner w/130 Shots
5493'-99
5517- 30
5881- 95
5927- 35
5939- 43
5968- 74
5976- 87
6015-20

5860' - Top of Point Lookout

6020' - Bottom of 2" tubing

6035' - Top of Mancos

605[illegible]' - Plug Back total depth

6094' - Total depth and bottom of 5" liner set with 225 sks cement.