Denny G. Foust
DEPUTY OIL & GAS INSPECTOR

DEC 2 9 1997

Approved

Meter Number:72472
Location Name:RUSSELL LS 5
Location:TN-28 RG-08
SC-25 UL-G
2 - Federal
NMOCD Zone:OUTSIDE
Hazard Ranking Score:00

RECEIVED
APR 1 4 1997
OIL CON. DIV.
DIST. 3

RATIONALE FOR RISK-BASED CLOSURE OF PRODUCTION PITS LOCATED OUTSIDE OF THE VULNERABLE ZONE IN THE SAN JUAN BASIN

This production pit location was ranked according to the criteria in the New Mexico Oil Conservation Division's Unlined Surface Impoundment Closure Guidelines and received a ranking score of zero. The estimated depth to groundwater is greater than 100-feet beneath ground surface (bgs), the pit is not in a well head protection area, and there are no surface water bodies within 1,000 horizontal feet of the pit location.

The primary source, discharge to the pit has been removed. There has been no discharge to the pits for at least 4 years and the pits have been closed for at least one year.

Each pit was backfilled with clean soil and graded in a manner to divert precipitation away from the excavated area. Minimal infiltration of rainfall is expected. Any rainfall that does infiltrate the ground surface must migrate through clean backfill before reaching the residual hydrocarbons.

There is no source material at the ground surface, so direct contact of hydrocarbons with livestock and the populous is not likely.

In general, outside of the vulnerable area and alluvial valleys, bedrock material is generally encountered within 20 feet of the ground surface. Bedrock material in the San Juan Basin consists of interbedded sandstones, shales and clays. According to Freeze and Cherry, 1979, the hydraulic conductivity of the bedrock material are as follows:

Sandstone	10^{-9} to 10^{-13} cm/sec
Shale	10^{-12} to 10^{-16} cm/sec
Clay	10^{-12} to 10^{-15} cm/sec

Based on this information, the residual hydrocarbons should not migrate to groundwater.

Natural process (bioremediation) are degrading the residual hydrocarbon to carbon dioxide and water and will continue until the source is gone, therefore minimizing any impact to the environment.

Based on the above information, it is highly unlikely that any source material will impact groundwater or ever find an exposure pathway to affect human health and therefore El Paso Field Services Company (EPFS) requests closure of this pit location.

EPFS
EL PASO FIELD SERVICES

FIELD PIT SITE ASSESSMENT FORM

GENERAL

Meter: 73472 Location: Russell LS 5
Operator #: 0203 Operator Name: Amoco P/L District: Blanco
Coordinates: Letter: G Section 25 Township: 28 Range: 8
Or Latitude _____ Longitude _____
Pit Type: Dehydrator ✓ Location Drip: ___ Line Drip: ___ Other: _____
Site Assessment Date: 6/9/94 Area: 13 Run: 42

SITE ASSESSMENT

NMOCD Zone:
(From NMOCD Maps)
Inside ☐ (1)
Outside ☒ (2)

Land Type:
BLM ☒ (1)
State ☐ (2)
Fee ☐ (3)
Indian _____

Depth to Groundwater
Less Than 50 Feet (20 points) ☐ (1)
50 Ft to 99 Ft (10 points) ☐ (2)
Greater Than 100 Ft (0 points) ☒ (3)

Wellhead Protection Area :
Is it less than 1000 ft from wells, springs, or other sources of fresh water extraction? , or ; Is it less than 200 ft from a private domestic water source? ☐ (1) YES (20 points) ☒ (2) NO (0 points)

Horizontal Distance to Surface Water Body
Less Than 200 Ft (20 points) ☐ (1)
200 Ft to 1000 Ft (10 points) ☐ (2)
Greater Than 1000 Ft (0 points) ☒ (3)
Name of Surface Water Body _____
(Surface Water Body : Perennial Rivers,Major Wash,Streams,Creeks, Irrigation Canals,Ditches,Lakes,Ponds)
Distance to Nearest Ephemeral Stream ☐ (1) < 100'(Navajo Pits Only)
☐ (2) > 100'

TOTAL HAZARD RANKING SCORE: 0 **POINTS**

REMARKS

Remarks : Redline + Vulo. - Outside
3 pits. Will close 1. Pit has liquid in it. Dehy still on pit. Does not appear to be operating. Dehy has not been transfered to operator according to Dehy Book
(Called Blanco office about liquid)

PITS 11 - TM

ORIGINAL PIT LOCATION

ORIGINAL PIT LOCATION

Original Pit : a) Degrees from North 71° Footage from Wellhead 89'

b) Length : 39' Width : 31' Depth : 4'

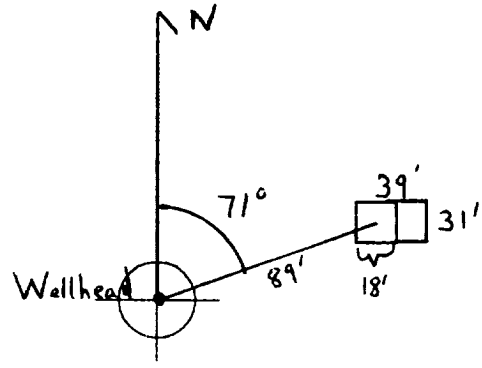

REMARKS

Remarks :

Pictures @ 1305 (5-9)
End Dump

Fenced + Bermed area of pit is 39'X31'. Actual pit area is 31'x18'x4'

Completed By:

Cory Chance
Signature

6/9/94
Date

FIELD PIT REMEDIATION/CLOSURE FORM

GENERAL

Meter: 72472 Location: Russell LS #5

Coordinates: Letter: G Section 25 Township: 28 Range: 8

Or Latitude _____ Longitude _____

Date Started : 8-4-94 Run: 13 42

FIELD OBSERVATIONS

Sample Number(s): MK 228 _____ _____ _____

Sample Depth: 9' Feet

Final PID Reading 284 PID Reading Depth 9' Feet

	Yes	No	
Groundwater Encountered	☐	☒	Approximate Depth _____ Feet

CLOSURE

Remediation Method :

- Excavation ☐ Approx. Cubic Yards _____
- Onsite Bioremediation ☐
- Backfill Pit Without Excavation ☒

Soil Disposition:

- Envirotech ☐ ☐ Tierra
- Other Facility ☐ Name: _____

Pit Closure Date: 8-4-94 Pit Closed By: BEI

REMARKS

Remarks : EPNG lines not marked soil Gray strong Hydrocarbon odor Hit sandstone 9'

Signature of Specialist: Morgan Killion

(SP3191) 03/16/94

El Paso Natural Gas Company

FIELD SERVICES LABORATORY
ANALYTICAL REPORT
PIT CLOSURE PROJECT - Soil

SAMPLE IDENTIFICATION

	Field ID	Lab ID
SAMPLE NUMBER:	MK 228	9458419
MTR CODE | SITE NAME:	72472	N/A
SAMPLE DATE | TIME (Hrs):	8-4-94	1603
SAMPLED BY:	N/A	
DATE OF TPH EXT. | ANAL.:	8/9/94	8/9/94
DATE OF BTEX EXT. | ANAL.:	N/A	N/A
TYPE | DESCRIPTION:	VG	Gray Sand + Clay

REMARKS:

RESULTS

PARAMETER	RESULT	UNITS	QUALIFIERS			
			DF	Q	M(g)	V(ml)
BENZENE		MG/KG				
TOLUENE		MG/KG				
ETHYL BENZENE		MG/KG				
TOTAL XYLENES		MG/KG				
TOTAL BTEX		MG/KG				
TPH (418.1)	3400	MG/KG			2.23	28
HEADSPACE PID	284	PPM				
PERCENT SOLIDS	90.0	%				

– TPH is by EPA Method 418.1 and BTEX is by EPA Method 8020 –

The Surrogate Recovery was at N/A % for this sample All QA/QC was acceptable.

Narrative:

DF = Dilution Factor Used

Approved By: J.S.

Date: 8/12/94

```
*************************************************
                Test Method for                  *
     Oil and Grease and Petroleum Hydrocarbons   *
              in Water and Soil                  *
                                                 *
          Perkin-Elmer Model 1600 FT-IR          *
               Analysis Report                   *
*************************************************
```

ILLEGIBLE

?4/08/09 13:55

Sample identification
?45849

Initial mass of sample, g
1.030

Volume of sample after extraction, ml
13.000

Petroleum hydrocarbons, ppm
?57.133
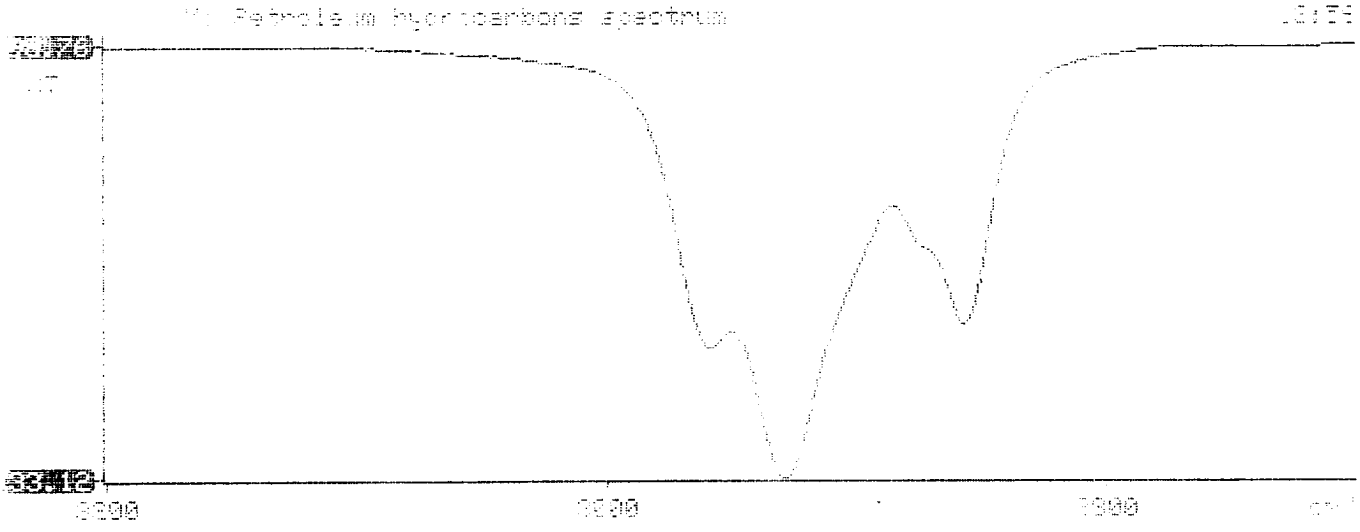
Net absorbance of hydrocarbons (2930 cm-1)
.074