Form 3160-3
(June 2015)

FORM APPROVED
OMB No. 1004-0137
Expires: January 31, 2018

UNITED STATES
DEPARTMENT OF THE INTERIOR
BUREAU OF LAND MANAGEMENT

APPLICATION FOR PERMIT TO DRILL OR REENTER

5. Lease Serial No.

6. If Indian, Allotee or Tribe Name

1a. Type of work: ☐ DRILL ☐ REENTER

1b. Type of Well: ☐ Oil Well ☐ Gas Well ☐ Other

1c. Type of Completion: ☐ Hydraulic Fracturing ☐ Single Zone ☐ Multiple Zone

7. If Unit or CA Agreement, Name and No.

8. Lease Name and Well No.

2. Name of Operator

9. API Well No.

3a. Address

3b. Phone No. *(include area code)*

10. Field and Pool, or Exploratory

4. Location of Well *(Report location clearly and in accordance with any State requirements.*)*

At surface

At proposed prod. zone

11. Sec., T. R. M. or Blk. and Survey or Area

14. Distance in miles and direction from nearest town or post office*

12. County or Parish

13. State

15. Distance from proposed* location to nearest property or lease line, ft. (Also to nearest drig. unit line, if any)

16. No of acres in lease

17. Spacing Unit dedicated to this well

18. Distance from proposed location* to nearest well, drilling, completed, applied for, on this lease, ft.

19. Proposed Depth

20. BLM/BIA Bond No. in file

21. Elevations (Show whether DF, KDB, RT, GL, etc.)

22. Approximate date work will start*

23. Estimated duration

24. Attachments

The following, completed in accordance with the requirements of Onshore Oil and Gas Order No. 1, and the Hydraulic Fracturing rule per 43 CFR 3162.3-3 (as applicable)

1. Well plat certified by a registered surveyor.
2. A Drilling Plan.
3. A Surface Use Plan (if the location is on National Forest System Lands, the SUPO must be filed with the appropriate Forest Service Office).
4. Bond to cover the operations unless covered by an existing bond on file (see Item 20 above).
5. Operator certification.
6. Such other site specific information and/or plans as may be requested by the BLM.

25. Signature

Name *(Printed/Typed)*

Date

Title

Approved by *(Signature)*

Name *(Printed/Typed)*

Date

Title

Office

Application approval does not warrant or certify that the applicant holds legal or equitable title to those rights in the subject lease which would entitle the applicant to conduct operations thereon.
Conditions of approval, if any, are attached.

Title 18 U.S.C. Section 1001 and Title 43 U.S.C. Section 1212, make it a crime for any person knowingly and willfully to make to any department or agency of the United States any false, fictitious or fraudulent statements or representations as to any matter within its jurisdiction.

APPROVED WITH CONDITIONS

(Continued on page 2)

*(Instructions on page 2)

Approval Date: 05/22/2023

INSTRUCTIONS

GENERAL: This form is designed for submitting proposals to perform certain well operations, as indicated on Federal and Indian lands and leases for action by appropriate Federal agencies, pursuant to applicable Federal laws and regulations. Any necessary special instructions concerning the use of this form and the number of copies to be submitted, particularly with regard to local, area, or regional procedures and practices, either are shown below or will be issued by, or may be obtained from local Federal offices.

ITEM I: If the proposal is to redrill to the same reservoir at a different subsurface location or to a new reservoir, use this form with appropriate notations. Consult applicable Federal regulations concerning subsequent work proposals or reports on the well.

ITEM 4: Locations on Federal or Indian land should be described in accordance with Federal requirements. Consult local Federal offices for specific instructions.

ITEM 14: Needed only when location of well cannot readily be found by road from the land or lease description. A plat, or plats, separate or on the reverse side, showing the roads to, and the surveyed location of, the wen, and any other required information, should be furnished when required by Federal agency offices.

ITEMS 15 AND 18: If well is to be, or has been directionany drilled, give distances for subsurface location of hole in any present or objective productive zone.

ITEM 22: Consult applicable Federal regulations, or appropriate officials, concerning approval of the proposal before operations are started.

ITEM 24: If the proposal will involve hydraulic fracturing operations, you must comply with 43 CFR 3162.3-3, including providing information about the protection of usable water. Operators should provide the best available information about all formations containing water and their depths. This information could include data and interpretation of resistivity logs run on nearby wells. Information may also be obtained from state or tribal regulatory agencies and from local BLM offices.

NOTICES

The Privacy Act of 1974 and regulation in 43 CFR 2.48(d) provide that you be furnished the following information in connection with information required by this application.
AUTHORITY: 30 U.S.C. 181 et seq., 25 U.S.C. 396; 43 CFR 3160
PRINCIPAL PURPOSES: The information will be used to: (1) process and evaluate your application for a permit to drill a new oil, gas, or service wen or to reenter a plugged and abandoned well; and (2) document, for administrative use, information for the management, disposal and use of National Resource Lands and resources including (a) analyzing your proposal to discover and extract the Federal or Indian resources encountered; (b) reviewing procedures and equipment and the projected impact on the land involved; and (c) evaluating the effects of the proposed operation on the surface and subsurface water and other environmental impacts.
ROUTINE USE: Information from the record and/or the record win be transferred to appropriate Federal, State, and local or foreign agencies, when relevant to civil, criminal or regulatory investigations or prosecution, in connection with congressional inquiries and for regulatory responsibilities.
EFFECT OF NOT PROVIDING INFORMATION: Filing of this application and disclosure of the information is mandatory only if you elect to initiate a drilling or reentry operation on an oil and gas lease.

The Paperwork Reduction Act of 1995 requires us to inform you that:
The BLM conects this information to anow evaluation of the technical, safety, and environmental factors involved with drilling for oil and/or gas on Federal and Indian oil and gas leases. This information will be used to analyze and approve applications. Response to this request is mandatory only if the operator elects to initiate drilling or reentry operations on an oil and gas lease. The BLM would like you to know that you do not have to respond to this or any other Federal agency-sponsored information collection unless it displays a currently valid OMB control number.

BURDEN HOURS STATEMENT: Public reporting burden for this form is estimated to average 8 hours per response, including the time for reviewing instructions, gathering and maintaining data, and completing and reviewing the form. Direct comments regarding the burden estimate or any other aspect of this form to U.S. Department of the Interior, Bureau of Land Management (1004-0137), Bureau Information Conection Clearance Officer (WO-630), 1849 C Street, N.W., Mail Stop 401 LS, Washington, D.C. 20240.

District I
1625 N. French Dr., Hobbs, NM 88240
Phone: (575) 393-6161 Fax: (575) 393-0720
District II
811 S. First St., Artesia, NM 88210
Phone: (575) 748-1283 Fax: (575) 748-9720
District III
1000 Rio Brazos Road, Aztec, NM 87410
Phone: (505) 334-6178 Fax: (505) 334-6170
District IV
1220 S. St. Francis Dr., Santa Fe, NM 87505
Phone: (505) 476-3460 Fax: (505) 476-3462

State of New Mexico
Energy, Minerals & Natural Resources
Department
OIL CONSERVATION DIVISION
1220 South St. Francis Dr.
Santa Fe, NM 87505

FORM C-102
Revised August 1, 2011
Submit one copy to appropriate District Office

☐ **AMENDED REPORT**

WELL LOCATION AND ACREAGE DEDICATION PLAT

[1]API Number	[2]Pool Code	[3]Pool Name
30-025-	96994	PITCHFORK RANCH; WOLFCAMP, SOUTH

[4]Property Code	[5]Property Name	[6]Well Number
333757	SILVER TRAIN 17 FED COM	747H

[7]OGRID No.	[8]Operator Name	[9]Elevation
7377	EOG RESOURCES, INC.	3351'

[10]Surface Location

UL or lot no.	Section	Township	Range	Lot Idn	Feet from the	North/South line	Feet from the	East/West line	County
O	17	25-S	34-E	-	482'	SOUTH	1612'	EAST	LEA

[11]Bottom Hole Location If Different From Surface

UL or lot no.	Section	Township	Range	Lot Idn	Feet from the	North/South line	Feet from the	East/West line	County
I	8	25-S	34-E	-	2536'	SOUTH	990'	EAST	LEA

[12]Dedicated Acres	[13]Joint or Infill	[14]Consolidation Code	[15]Order No.
480.00			

No allowable will be assigned to this completion until all interests have been consolidated or a non-standard unit has been approved by the division.

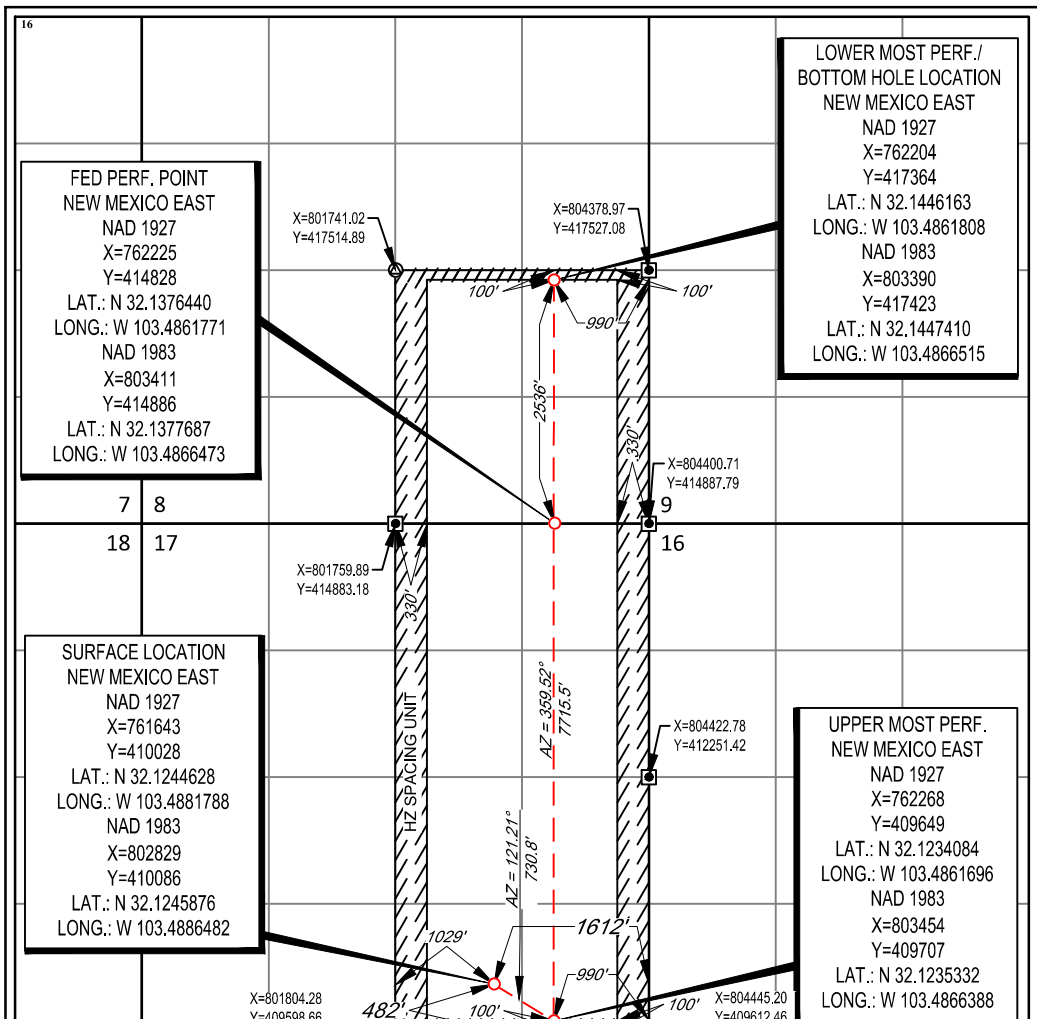

[17]OPERATOR CERTIFICATION

I hereby certify that the information contained herein is true and complete to the best of my knowledge and belief, and that this organization either owns a working interest or unleased mineral interest in the land including the proposed bottom hole location or has a right to drill this well at this location pursuant to a contract with an owner of such a mineral or working interest, or to a voluntary pooling agreement or a compulsory pooling order heretofore entered by the division.

Craig Richardson 10/5/2021
Signature Date

Craig Richardson
Printed Name

craig_richardson@eogresources.com
E-mail Address

[18]SURVEYOR CERTIFICATION

I hereby certify that the well location shown on this plat was plotted from field notes of actual surveys made by me or under my supervision, and that the same is true to the best of my belief.

05/07/2021
Date of Survey
Signature and Seal of Professional Surveyor

RAMON A. DOMINGUEZ
NEW MEXICO
24508
PROFESSIONAL SURVEYOR

Certificate Number

S:\SURVEY\EOG_MIDLAND\SILVER_TRAIN_17_FED_COM\FINAL_PRODUCTS\LO_SILVER_TRAIN_17_FC_747H.DWG 7/1/2021 11:33:26 AM bgregory

State of New Mexico
Energy, Minerals and Natural Resources Department

Submit Electronically
Via E-permitting

Oil Conservation Division
1220 South St. Francis Dr.
Santa Fe, NM 87505

NATURAL GAS MANAGEMENT PLAN

This Natural Gas Management Plan must be submitted with each Application for Permit to Drill (APD) for a new or recompleted well.

Section 1 – Plan Description

Effective May 25, 2021

I. Operator: ___EOG Resources, Inc._____ **OGRID:** _____7377_____ **Date:** 08/27/2024

II. Type: ☒ Original ☐ Amendment due to ☐ 19.15.27.9.D(6)(a) NMAC ☐ 19.15.27.9.D(6)(b) NMAC ☐ Other.

If Other, please describe: _____

III. Well(s): Provide the following information for each new or recompleted well or set of wells proposed to be drilled or proposed to be recompleted from a single well pad or connected to a central delivery point.

Well Name	API	ULSTR	Footages	Anticipated Oil BBL/D	Anticipated Gas MCF/D	Anticipated Produced Water BBL/D
SILVER TRAIN 17 FED COM 747H		O-17-25S-34E	482' FSL & 1612' FEL	+/- 1000	+/- 3500	+/- 3000

IV. Central Delivery Point Name: ___SILVER TRAIN 17 FED COM CTB_____ [See 19.15.27.9(D)(1) NMAC]

V. Anticipated Schedule: Provide the following information for each new or recompleted well or set of wells proposed to be drilled or proposed to be recompleted from a single well pad or connected to a central delivery point.

Well Name	API	Spud Date	TD Reached Date	Completion Commencement Date	Initial Flow Back Date	First Production Date
SILVER TRAIN 17 FED COM 747H		09/01/24	09/26/24	12/1/24	01/1/25	01/15/25

VI. Separation Equipment: ☒ Attach a complete description of how Operator will size separation equipment to optimize gas capture.

VII. Operational Practices: ☒ Attach a complete description of the actions Operator will take to comply with the requirements of Subsection A through F of 19.15.27.8 NMAC.

VIII. Best Management Practices: ☒ Attach a complete description of Operator's best management practices to minimize venting during active and planned maintenance.

Section 2 – Enhanced Plan

EFFECTIVE APRIL 1, 2022

Beginning April 1, 2022, an operator that is not in compliance with its statewide natural gas capture requirement for the applicable reporting area must complete this section.

☒ Operator certifies that it is not required to complete this section because Operator is in compliance with its statewide natural gas capture requirement for the applicable reporting area.

IX. Anticipated Natural Gas Production:

Well	API	Anticipated Average Natural Gas Rate MCF/D	Anticipated Volume of Natural Gas for the First Year MCF

X. Natural Gas Gathering System (NGGS):

Operator	System	ULSTR of Tie-in	Anticipated Gathering Start Date	Available Maximum Daily Capacity of System Segment Tie-in

XI. Map. ☐ Attach an accurate and legible map depicting the location of the well(s), the anticipated pipeline route(s) connecting the production operations to the existing or planned interconnect of the natural gas gathering system(s), and the maximum daily capacity of the segment or portion of the natural gas gathering system(s) to which the well(s) will be connected.

XII. Line Capacity. The natural gas gathering system ☐ will ☐ will not have capacity to gather 100% of the anticipated natural gas production volume from the well prior to the date of first production.

XIII. Line Pressure. Operator ☐ does ☐ does not anticipate that its existing well(s) connected to the same segment, or portion, of the natural gas gathering system(s) described above will continue to meet anticipated increases in line pressure caused by the new well(s).

☐ Attach Operator's plan to manage production in response to the increased line pressure.

XIV. Confidentiality: ☐ Operator asserts confidentiality pursuant to Section 71-2-8 NMSA 1978 for the information provided in Section 2 as provided in Paragraph (2) of Subsection D of 19.15.27.9 NMAC, and attaches a full description of the specific information for which confidentiality is asserted and the basis for such assertion.

Section 3 - Certifications

Effective May 25, 2021

Operator certifies that, after reasonable inquiry and based on the available information at the time of submittal:

☒ Operator will be able to connect the well(s) to a natural gas gathering system in the general area with sufficient capacity to transport one hundred percent of the anticipated volume of natural gas produced from the well(s) commencing on the date of first production, taking into account the current and anticipated volumes of produced natural gas from other wells connected to the pipeline gathering system; or

☐ Operator will not be able to connect to a natural gas gathering system in the general area with sufficient capacity to transport one hundred percent of the anticipated volume of natural gas produced from the well(s) commencing on the date of first production, taking into account the current and anticipated volumes of produced natural gas from other wells connected to the pipeline gathering system.
If Operator checks this box, Operator will select one of the following:

Well Shut-In. ☐ Operator will shut-in and not produce the well until it submits the certification required by Paragraph (4) of Subsection D of 19.15.27.9 NMAC; or

Venting and Flaring Plan. ☐ Operator has attached a venting and flaring plan that evaluates and selects one or more of the potential alternative beneficial uses for the natural gas until a natural gas gathering system is available, including:

- **(a)** power generation on lease;
- **(b)** power generation for grid;
- **(c)** compression on lease;
- **(d)** liquids removal on lease;
- **(e)** reinjection for underground storage;
- **(f)** reinjection for temporary storage;
- **(g)** reinjection for enhanced oil recovery;
- **(h)** fuel cell production; and
- **(i)** other alternative beneficial uses approved by the division.

Section 4 - Notices

1. If, at any time after Operator submits this Natural Gas Management Plan and before the well is spud:

(a) Operator becomes aware that the natural gas gathering system it planned to connect the well(s) to has become unavailable or will not have capacity to transport one hundred percent of the production from the well(s), no later than 20 days after becoming aware of such information, Operator shall submit for OCD's approval a new or revised venting and flaring plan containing the information specified in Paragraph (5) of Subsection D of 19.15.27.9 NMAC; or

(b) Operator becomes aware that it has, cumulatively for the year, become out of compliance with its baseline natural gas capture rate or natural gas capture requirement, no later than 20 days after becoming aware of such information, Operator shall submit for OCD's approval a new or revised Natural Gas Management Plan for each well it plans to spud during the next 90 days containing the information specified in Paragraph (2) of Subsection D of 19.15.27.9 NMAC, and shall file an update for each Natural Gas Management Plan until Operator is back in compliance with its baseline natural gas capture rate or natural gas capture requirement.

2. OCD may deny or conditionally approve an APD if Operator does not make a certification, fails to submit an adequate venting and flaring plan which includes alternative beneficial uses for the anticipated volume of natural gas produced, or if OCD determines that Operator will not have adequate natural gas takeaway capacity at the time a well will be spud.

I certify that, after reasonable inquiry, the statements in and attached to this Natural Gas Management Plan are true and correct to the best of my knowledge and acknowledge that a false statement may be subject to civil and criminal penalties under the Oil and Gas Act.

Signature: Kayla McConnell
Printed Name: KAYLA MCCONNELL
Title: Regulatory Specialist
E-mail Address: KAYLA_MCCONNELL@EOGRESOURCES.COM
Date: 08/21/2024
Phone: (432) 265-6804

OIL CONSERVATION DIVISION **(Only applicable when submitted as a standalone form)**
Approved By:
Title:
Approval Date:
Conditions of Approval:

Natural Gas Management Plan
Items VI-VIII

VI. Separation Equipment: Attach a complete description of how Operator will size separation equipment to optimize gas capture.

- Separation equipment will be sized to provide adequate separation for anticipated rates.
- Adequate separation relates to retention time for Liquid – Liquid separation and velocity for Gas-Liquid separation.
- Collection systems are appropriately sized to handle facility production rates on all (3) phases.
- Ancillary equipment and metering is selected to be serviced without flow interruptions or the need to release gas from the well.

VII. Operational Practices: Attach a complete description of the actions Operator will take to comply with the requirements of Subsection A through F 19.15.27.8 NMAC.

Drilling Operations

- All flare stacks will be properly sized. The flare stacks will be located at a minimum 100' from the nearest surface hole location on the pad.
- All natural gas produced during drilling operations will be flared, unless there is an equipment malfunction and/or to avoid risk of an immediate and substantial adverse impact on safety and the environment, at which point the gas will be vented.

Completions/Recompletions Operations

- New wells will not be flowed back until they are connected to a properly sized gathering system.
- The facility will be built/sized for maximum anticipated flowrates and pressures to minimize waste.
- For flowback operations, multiple stages of separation will be used as well as excess VRU and blowers to make sure waste is minimized off the storage tanks and facility.
- During initial flowback, the well stream will be routed to separation equipment.
- At an existing facility, when necessary, post separation natural gas will be flared until it meets pipeline specifications, at which point it will be turned into a collection system.
- At a new facility, post separation natural gas will be vented until storage tanks can safely function, at which point it will be flared until it meets pipeline spec.

Production Operations

- Weekly AVOs will be performed on all facilities.
- All flares will be equipped with auto-ignition systems and continuous pilot operations.
- After a well is stabilized from liquid unloading, the well will be turned back into the collection system.
- All plunger lift systems will be optimized to limit the amount of waste.
- All tanks will have automatic gauging equipment installed.
- Leaking thief hatches found during AVOs will be cleaned and properly re-sealed.

Performance Standards

- Production equipment will be designed to handle maximum anticipated rates and pressure.
- All flared gas will be combusted in a flare stack that is properly sized and designed to ensure proper combustion.
- Weekly AVOs will be performed on all wells and facilities that produce more than 60 Mcfd.

Measurement & Estimation

- All volume that is flared and vented that is not measured will be estimated.
- All measurement equipment for flared volumes will conform to API 14.10.
- No meter bypasses with be installed.

- When metering is not practical due to low pressure/low rate, the vented or flared volume will be estimated.

VIII. Best Management Practices: Attach a complete description of Operator's best management practices to minimize venting during active and planned maintenance.

- During downhole well maintenance, EOG will use best management practices to vent as minimally as possible.
- Prior to the commencement of any maintenance, the tank or vessel will be isolated from the rest of the facilities.
- All valves upstream of the equipment will be closed and isolated.
- After equipment has been isolated, the equipment will be blown down to as low a pressure as possible into the collection system.
- If the equipment being maintained cannot be relieved into the collection system, it shall be released to a tank where the vapor can either be captured or combusted if possible.
- After downhole well maintenance, natural gas will be flared until it reaches pipeline specification.

eog resources

Silver Train 17 Fed Com 747H

1. GEOLOGIC NAME OF SURFACE FORMATION:

Permian

2. ESTIMATED TOPS OF IMPORTANT GEOLOGICAL MARKERS:

Rustler	1,033'
Tamarisk Anhydrite	1,113'
Top of Salt	1,428'
Base of Salt	5,024'
Lamar	5,284'
Bell Canyon	5,311'
Cherry Canyon	6,267'
Brushy Canyon	7,822'
Bone Spring Lime	9,329'
Leonard Shale	9,348'
1st Bone Spring Sand	10,303'
2nd Bone Spring Shale	10,524'
2nd Bone Spring Sand	10,921'
3rd Bone Spring Carb	11,370'
3rd Bone Spring Sand	11,944'
Wolfcamp	12,395'
TD	13,050'

3. ESTIMATED DEPTHS OF ANTICIPATED FRESH WATER, OIL OR GAS:

Upper Permian Sands	0- 400’	Fresh Water
Cherry Canyon	6,267'	Oil
Brushy Canyon	7,822'	Oil
Leonard Shale	9,348'	Oil
1st Bone Spring Sand	10,303'	Oil
2nd Bone Spring Shale	10,524'	Oil
2nd Bone Spring Sand	10,921'	Oil
3rd Bone Spring Carb	11,370'	Oil
3rd Bone Spring Sand	11,944'	Oil
Wolfcamp	12,395'	Oil

No other Formations are expected to give up oil, gas or fresh water in measurable quantities. Surface fresh water sands will be protected by setting 9.625" casing at 1,138' and circulating cement back to surface.

eog resources

Silver Train 17 Fed Com 747H

4. CASING PROGRAM - NEW

Hole Size	Interval	Csg OD	Weight	Grade	Conn	DFmin Collapse	DFmin Burst	DFmin Tension
12.25"	0' - 1,140'	9.625"	36#	J-55	LTC	1.125	1.25	1.6
8.75"	0' - 11,470'	7.625"	29.7#	HCP-110	FXL	1.125	1.25	1.6
6.75"	0' - 10,970'	5.5"	20#	P-110EC	DWC/C-IS MS	1.125	1.25	1.6
6.75"	10,970' - 11,470'	5.5"	20#	P-110EC	VAM SFC	1.125	1.25	1.6
6.75"	11,470' - 20,657'	5.5"	20#	P-110EC	DWC/C-IS MS	1.125	1.25	1.6

Variance is requested to waive the centralizer requirements for the 7-5/8" casing in the 8-3/4" hole size. An expansion additive will be utilized, in the cement slurry, for the entire length of the 8-3/4 hole interval to maximize cement bond and zonal isolation.

Variance is also requested to waive any centralizer requirements for the 5-1/2" casing in the 6-3/4" hole size. An expansion additive will be utilized, in the cement slurry, for the entire length of the 6-3/4" hole interval to maximize cement bond and zonal isolation.

Variance is also requested to waive the annular clearance requirements for the 5-1/2" casing by 7-5/8" casing annulus to the proposed top of cement.

EOG requests permission to allow deviation from the 0.422'' annulus clearance requirement from Onshore Order #2 under the following conditions:

- Annular clearance to meet or exceed 0.422'' between intermediate casing ID and production casing coupling only on the first 500' overlap between both casing strings.
- Annular clearance less than 0.422'' is acceptable for the production open hole section.

Cementing Program:

Depth	No. Sacks	Wt. ppg	Yld Ft3/sk	Slurry Description
1,140' 9.625"	320	13.5	1.73	Lead: Class C + 4.0% Bentonite Gel + 0.5% CaCl2 + 0.25 lb/sk Cello-Flake (TOC @ Surface)
	80	14.8	1.34	Tail: Class C + 0.6% FL-62 + 0.25 lb/sk Cello-Flake + 0.2% Sodium Metasilicate (TOC @ 938')
11,470' 7.625"	460	14.2	1.11	1st Stage (Tail): Class C + 0.6% Halad-9 + 0.45% HR-601 + 3% Microbond (TOC @ 7,622')
	1300	14.8	1.5	2nd Stage (Bradenhead squeeze): Class C + 3% Salt + 1% PreMag-M + 6% Bentonite Gel (TOC @ surface)
20,657' 5.5"	840	14.2	1.31	Lead: Class H + 0.4% Halad-344 + 0.35% HR-601 + 3% Microbond (TOC @ 10,970')

eog resources

Silver Train 17 Fed Com 747H

Additive	Purpose
Bentonite Gel	Lightweight/Lost circulation prevention
Calcium Chloride	Accelerator
Cello-flake	Lost circulation prevention
Sodium Metasilicate	Accelerator
MagOx	Expansive agent
Pre-Mag-M	Expansive agent
Sodium Chloride	Accelerator
FL-62	Fluid loss control
Halad-344	Fluid loss control
Halad-9	Fluid loss control
HR-601	Retarder
Microbond	Expansive Agent

EOG requests to pump a two stage cement job on the 7-5/8" intermediate casing string with the first stage being pumped conventionally with the calculated top of cement at the Brushy Canyon (7,822') and the second stage performed as a bradenhead squeeze with planned cement from the Brushy Canyon to surface. If necessary, a top out consisting of 1,301 sacks of Class C cement + 3% Salt + 1% PreMag-M + 6% Bentonite Gel (2.30 yld, 12.91 ppg) will be executed as a contingency. Once cement circulates to surface drilling operations to drill out of the intermediate shoe will proceed (per clarification from BLM 4/21/2020). The final cement top will be verified by Echo-meter.

EOG will include the Echo-meter verified fluid top and the volume of displacement fluid above the cement slurry in the annulus in all post-drill sundries on wells utilizing this cement program.

EOG will report to the BLM the volume of fluid (limited to 5 bbls) used to flush intermediate casing valves following backside cementing procedures.

Cement integrity tests will be performed immediately following plug bump.

Note: Cement volumes based on bit size plus at least 25% excess in the open hole plus 10% excess in the cased-hole overlap section.

5. MINIMUM SPECIFICATIONS FOR PRESSURE CONTROL:

Variance is requested to use a co-flex line between the BOP and choke manifold (instead of using a 4” OD steel line).

The minimum blowout preventer equipment (BOPE) shown in Exhibit #1 will consist of a single ram, mud cross and double ram-type (10,000 psi WP) preventer and an annular preventer (5,000 psi WP). Both units will be hydraulically operated and the ram-type will be equipped with blind rams on bottom and drill pipe rams on top.

eog resources

Silver Train 17 Fed Com 747H

EOG will utilize wing unions on BOPE connections that can be isolated from wellbore pressure through means of a choke. All wing unions will be rated to a pressure that meets or exceeds the pressure rating of the BOPE system.

Variance is requested to use a 5,000 psi annular BOP with the 10,000 psi BOP stack.

Pipe rams and blind rams will be operationally checked on each trip out of the hole. These checks will be noted on the daily tour sheets.

A hydraulically operated choke will be installed prior to drilling out of the intermediate casing shoe.

6. TYPES AND CHARACTERISTICS OF THE PROPOSED MUD SYSTEM:

During this procedure we plan to use a Closed-Loop System and haul contents to the required disposal.

The applicable depths and properties of the drilling fluid systems are as follows:

Depth	Type	Weight (ppg)	Viscosity	Water Loss
0 – 1,140'	Fresh - Gel	8.6-8.8	28-34	N/c
1,140' – 11,470'	Brine	10.0-10.2	28-34	N/c
11,470' – 12,618'	Oil Base	8.7-9.4	58-68	N/c - 6
12,618' – 20,657' Lateral	Oil Base	10.0-14.0	58-68	4 - 6

The highest mud weight needed to balance formation is expected to be 11.5 ppg. In order to maintain hole stability, mud weights up to 14.0 ppg may be utilized.

An electronic pit volume totalizer (PVT) will be utilized on the circulating system, to monitor pit volume, flow rate, pump pressure and stroke rate.

Sufficient mud materials to maintain mud properties and meet minimum lost circulation and weight increase requirements will be kept at the wellsite at all times.

7. AUXILIARY WELL CONTROL AND MONITORING EQUIPMENT:

(A) A kelly cock will be kept in the drill string at all times.

(B) A full opening drill pipe-stabbing valve (inside BOP) with proper drill pipe connections will be on the rig floor at all times.

(C) H2S monitoring and detection equipment will be utilized from surface casing point to TD.

eog resources

Silver Train 17 Fed Com 747H

8. LOGGING, TESTING AND CORING PROGRAM:

Open-hole logs are not planned for this well.

GR-CCL Will be run in cased hole during completions phase of operations.

9. ABNORMAL CONDITIONS, PRESSURES, TEMPERATURES AND POTENTIAL HAZARDS:

The estimated bottom-hole temperature (BHT) at TD is 201 degrees F with an estimated maximum bottom-hole pressure (BHP) at TD of 9500 psig and a maximum anticipated surface pressure of 6629 psig (based on 14.0 ppg MW). No hydrogen sulfide or other hazardous gases or fluids have been encountered, reported or are known to exist at this depth in this area. Severe loss circulation is expected from 7,822' to intermediate casing point.

10. ANTICIPATED STARTING DATE AND DURATION OF OPERATIONS:

The drilling operation should be finished in approximately one month. If the well is productive, an additional 60-90 days will be required for completion and testing before a decision is made to install permanent facilities.

EOG Resources requests the option to contract a Surface Rig to drill, set surface casing, and Cement on the subject well. After WOC 8 hours or 500 psi compressive strength (whichever is greater), the Surface Rig will move off so the wellhead can be installed. A welder will cut the casing to the proper height and weld on the wellhead (both “A” and “B” sections). The weld will be tested to 1000 psi. All valves will be closed and a wellhead cap will be installed (diagram attached). If the timing between rigs is such that EOG Resources would not be able to preset the surface, the Primary Rig will MIRU and drill the well in its entirety per the APD.

11. WELLHEAD:

A multi-bowl wellhead system will be utilized.

After running the 9-5/8” surface casing, a 9-5/8” BOP/BOPE system with a minimum working pressure of 10,000 psi will be installed on the wellhead system and will be pressure tested to 250 psi low followed by a 10,000 psi pressure test. This pressure test will be repeated at least every 30 days, as per Onshore Order No. 2.

The minimum working pressure of the BOP and related BOPE required for drilling below the surface casing shoe shall be 10,000 psi.

The multi-bowl wellhead will be installed by vendor’s representative(s). A copy of the installation instructions for the Cactus Multi-Bowl WH system has been sent to the NM BLM office in Carlsbad, NM.

eog resources

Silver Train 17 Fed Com 747H

The wellhead will be installed by a third party welder while being monitored by WH vendor's representative.

All BOP equipment will be tested utilizing a conventional test plug. Not a cup or J-packer type. EOG Resources reserves the option to conduct BOPE testing during wait on cement periods provided a test plug is utilized.

A solid steel body pack-off will be utilized after running and cementing the intermediate casing. After installation the pack-off and lower flange will be pressure tested to 5000 psi.

Casing strings will be tested as per Onshore Order No. 2 to at least 0.22 psi/ft or 1500 psi, whichever is greater.

EOG Resources Inc. (EOG) respectfully requests a variance from the minimum standards for well control equipment testing of Onshore Order No. 2 (item III.A.2.i) to allow a testing schedule of the blow out preventer (BOP) and blow out prevention equipment (BOPE) to include the following:

- Full BOPE test at first installation on the pad.
- Full BOPE test every 30 days per Onshore Order No. 2.
- Function test BOP elements per Onshore Order No. 2.
- Break testing BOP and BOPE coupled with batch drilling operations and production sections that do not penetrate the Wolfcamp or deeper formations.
- After the well section is cemented the BOP will be disconnected from the wellhead and walked with the rig to another well on the pad. The cemented well will be secured with a blind flange and a pressure gauge for monitoring.

eog resources

Silver Train 17 Fed Com 747H

482' FSL
1612' FEL
Section 17
T-25-S, R-34-E

Proposed Wellbore

API: 30-025-*****

KB: 3376'
GL: 3351'

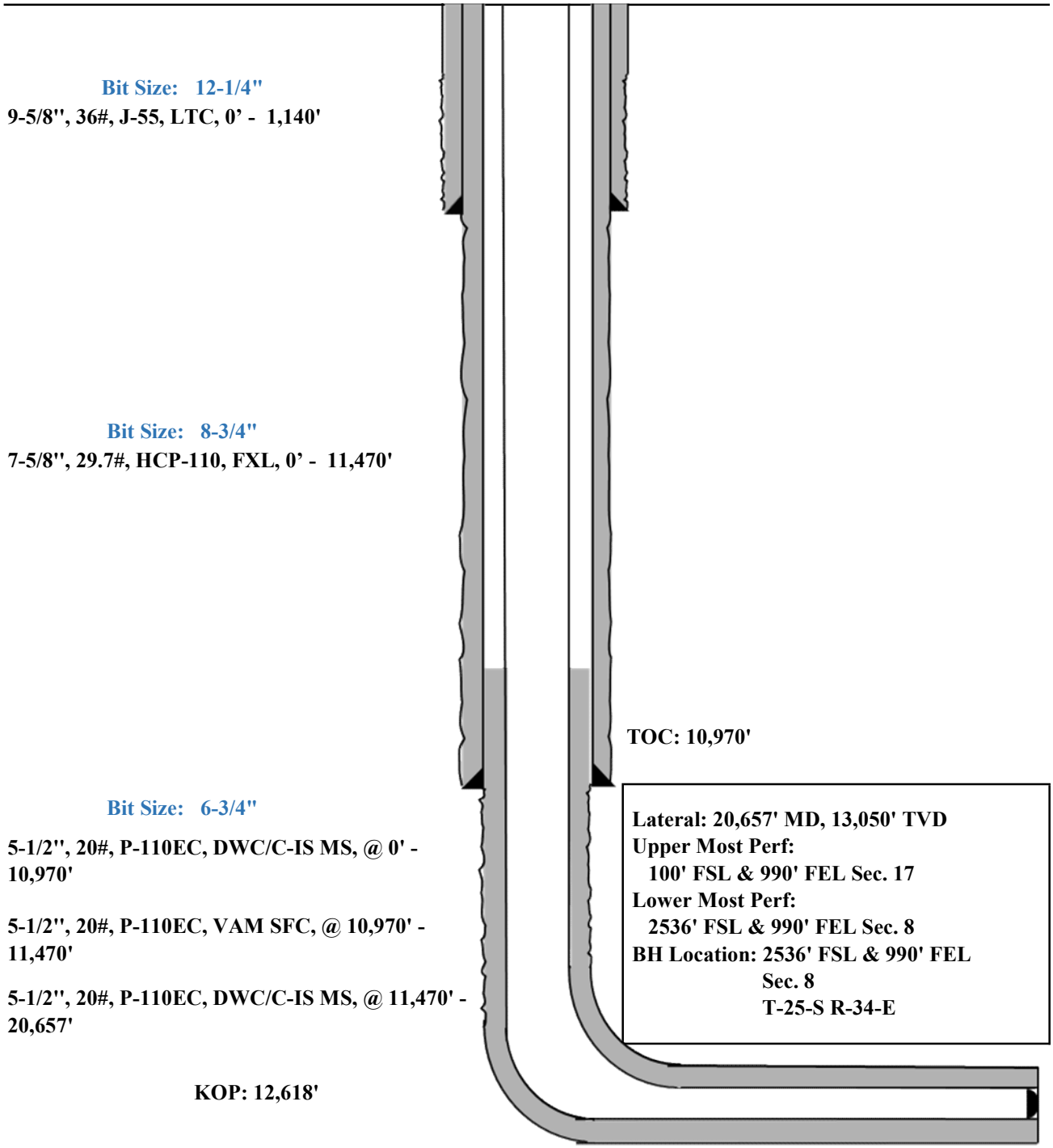

Metal One Corp. Metal One	MO-FXL Connection Data Sheet	Page	MCTP
		Date	3-Nov-16
		Rev.	0

MO-FXL

Geometry

Pipe Body

	Imperial		S.I.	
Grade	P110HC *1		P110HC *1	
Pipe OD (D)	7 5/8	in	193.68	mm
Weight	29.70	lb/ft	44.25	kg/m
Actual weight	29.04		43.26	kg/m
Wall Thickness (t)	0.375	in	9.53	mm
Pipe ID (d)	6.875	in	174.63	mm
Pipe body cross section	8.537	in^2	5,508	mm^2
Drift Dia.	6.750	in	171.45	mm

Connection

Box OD (W)	7.625	in	193.68	mm
PIN ID	6.875	in	174.63	mm
Make up Loss	4.219	in	107.16	mm
Box Critical Area	5.714	in^2	3686	mm^2
Joint load efficiency	70	%	70	%
Thread Taper	1 / 10 (1.2" per ft)			
Number of Threads	5 TPI			

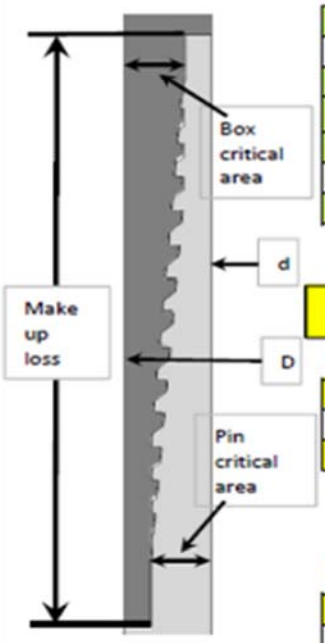

Performance

Performance Properties for Pipe Body

S.M.Y.S. *1	1,067	kips	4,747	kN
M.I.Y.P. *1	10,760	psi	74.21	MPa
Collapse Strength *1	7,360	psi	50.76	MPa

Note S.M.Y.S.= Specified Minimum YIELD Strength of Pipe body
M.I.Y.P. = Minimum Internal Yield Pressure of Pipe body
*1 Based on VSB P110HC (YS=125~140ksi)

Performance Properties for Connection

Tensile Yield load	747 kips (70% of S.M.Y.S.)
Min. Compression Yield	747 kips (70% of S.M.Y.S.)
Internal Pressure	8,610 psi (80% of M.I.Y.P.)
External Pressure	100% of Collapse Strength
Max. DLS (deg. /100ft)	40

Recommended Torque

Min.	15,500	ft-lb	21,000	N-m
Opti.	17,200	ft-lb	23,300	N-m
Max.	18,900	ft-lb	25,600	N-m
Operational Max.	23,600	ft-lb	32,000	N-m

Note : Operational Max. torque can be applied for high torque application

Released to Imaging: 9/9/2024 3:24:56 PM

Received by OCD: 8/28/2024 9:36:05 AM

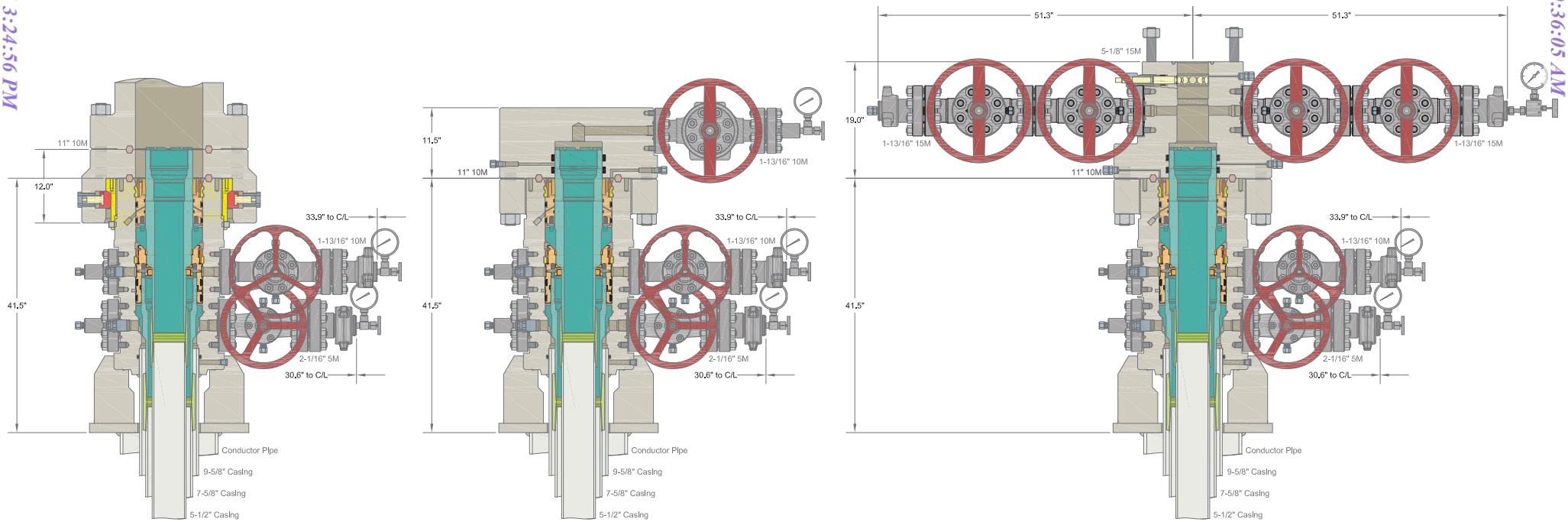

INFORMATION CONTAINED HEREIN IS THE PROPERTY OF CACTUS WELLHEAD, LLC. REPRODUCTION, DISCLOSURE, OR USE THEREOF IS PERMISSIBLE ONLY AS PROVIDED BY CONTRACT OR AS EXPRESSLY AUTHORIZED BY CACTUS WELLHEAD, LLC.

ALL DIMENSIONS APPROXIMATE

CACTUS WELLHEAD LLC	EOG RESOURCES DELAWARE		
20" x 9-5/8" x 7-5/8" x 5-1/2" MBU-T-SF SOW Wellhead System With 11" 10M x 5-1/8" 15M CMT-DBLHPS-SB Tubing Head, Mandrel Hangers, Quick Connect Drilling Adapter And TA Cap	DRAWN	DLE	23OCT18
	APPRV		
	DRAWING NO.	HBE0000010	

Exhibit 1
EOG Resources
11” 10M PSI BOP Stack

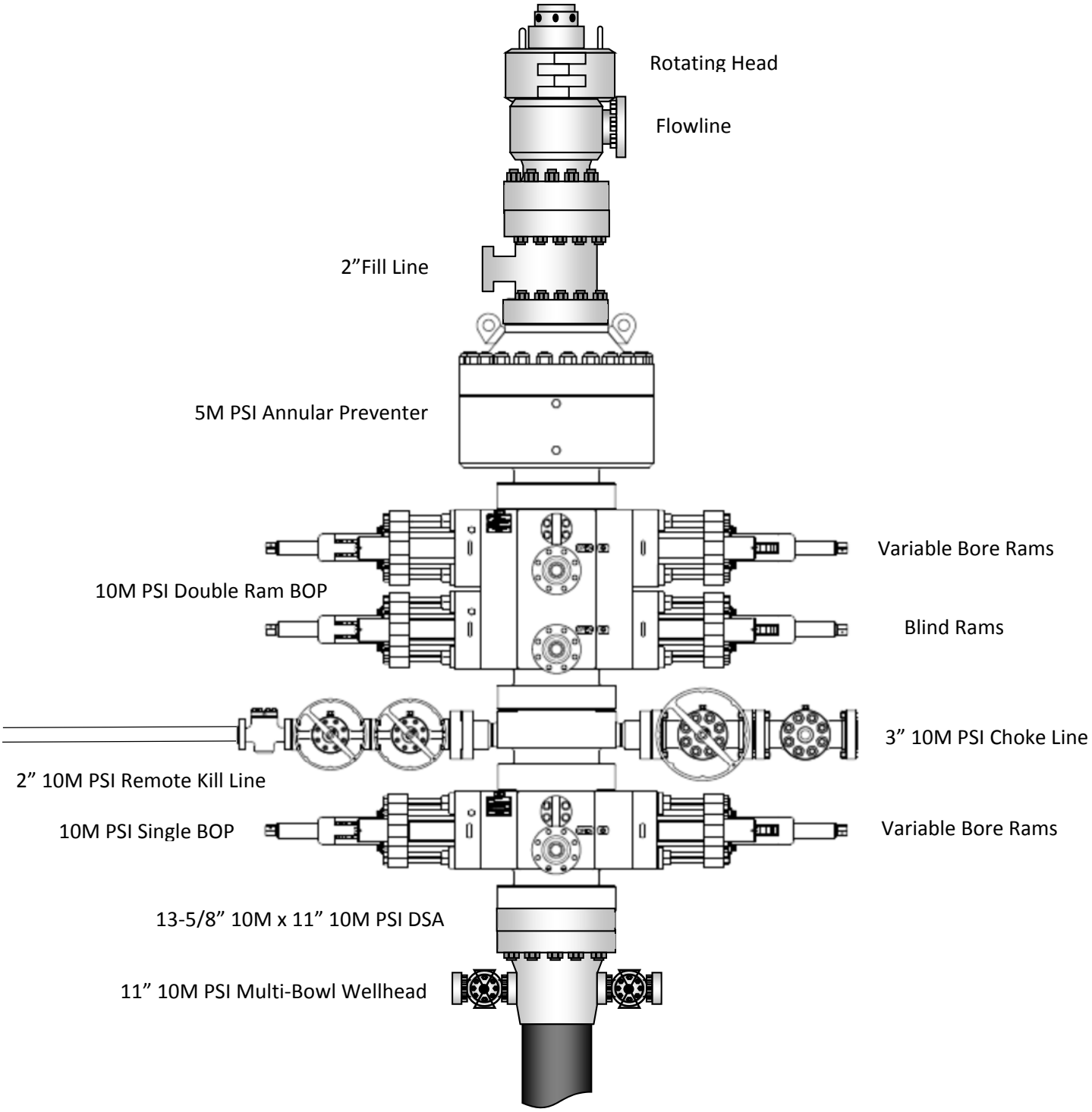

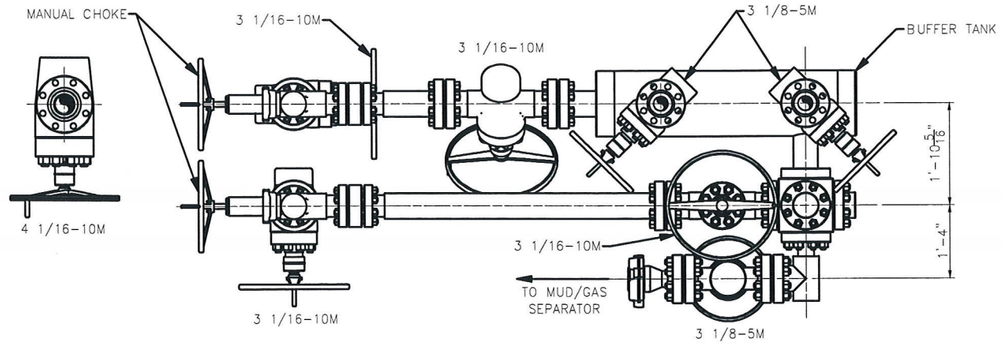

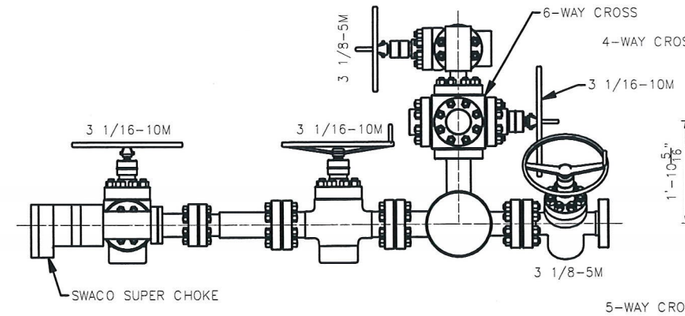

VIEW A-A

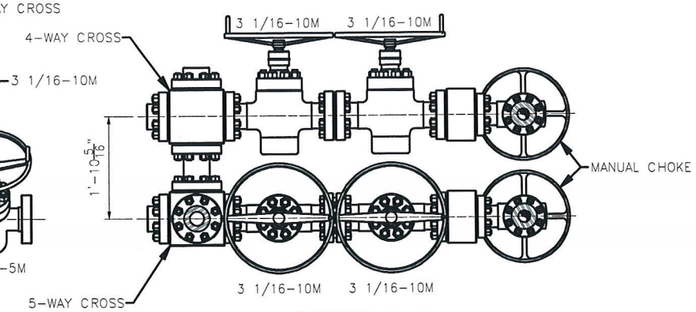

SECTION B-B

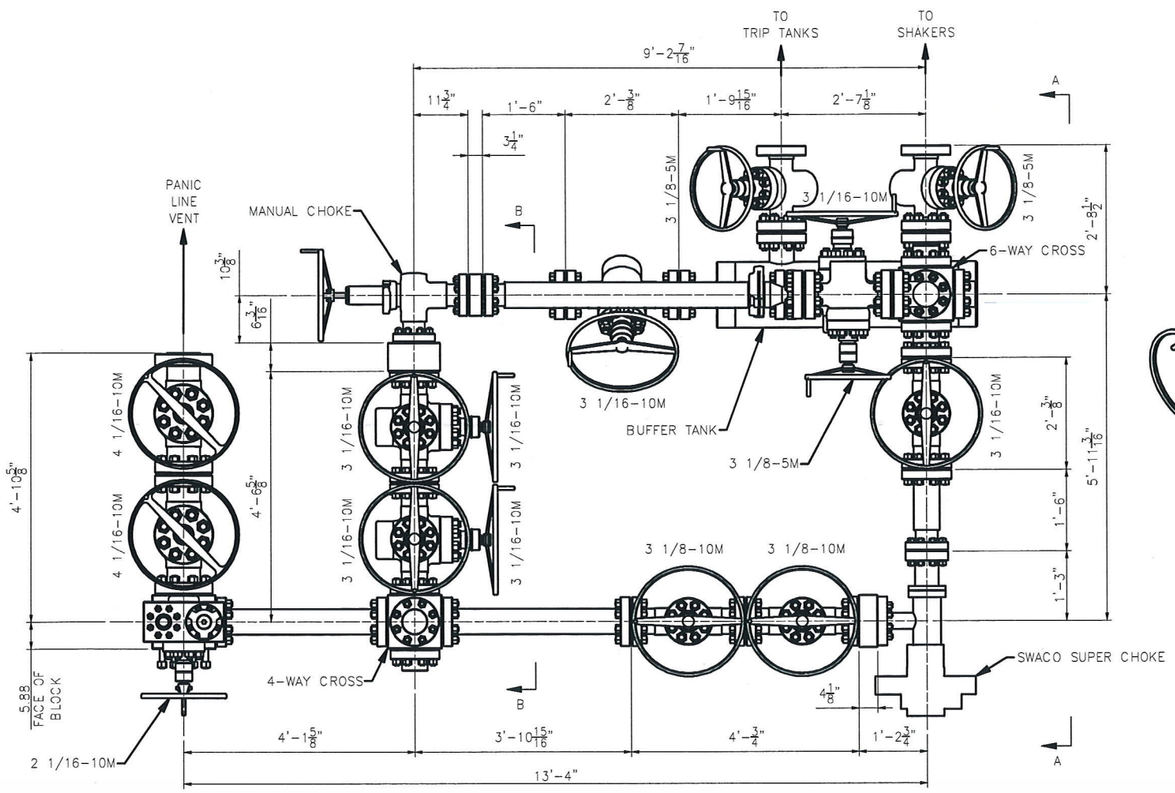

PLAN VIEW

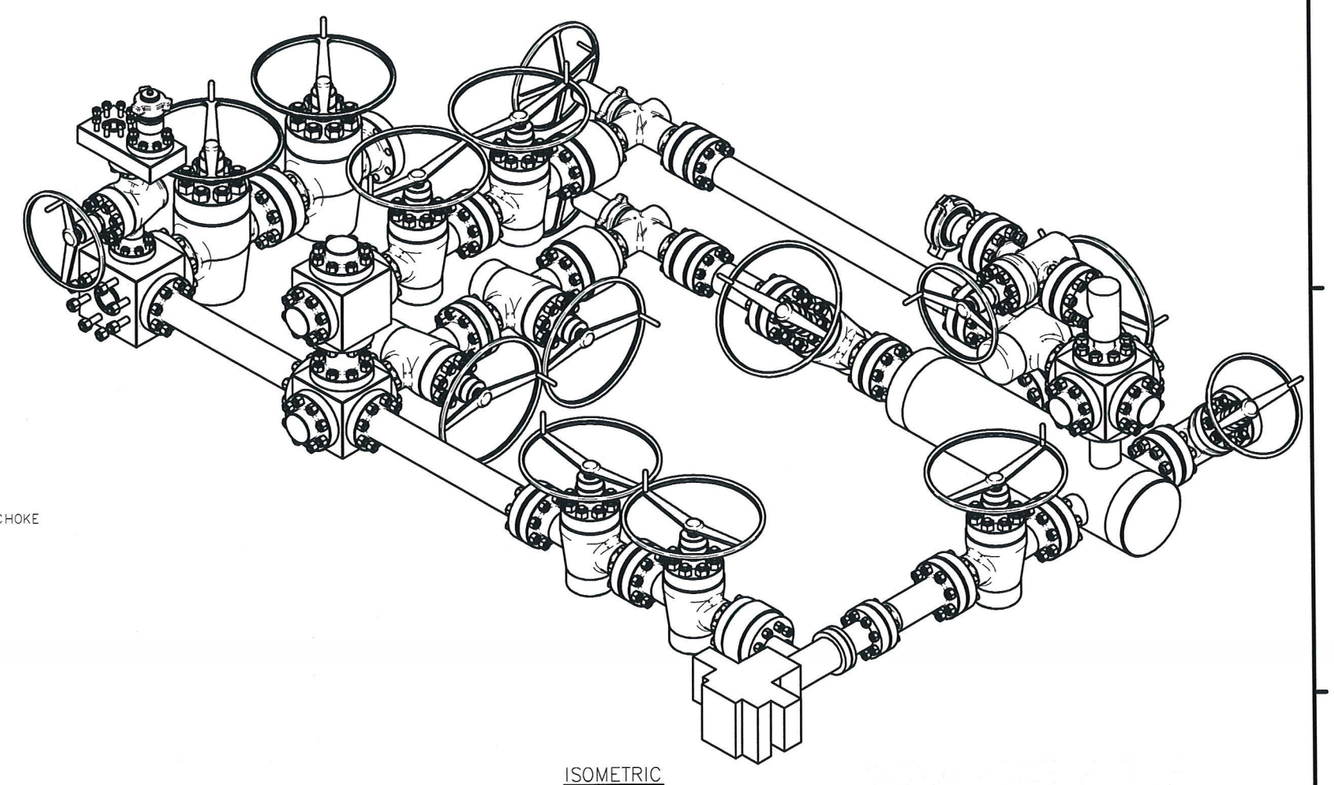

ISOMETRIC

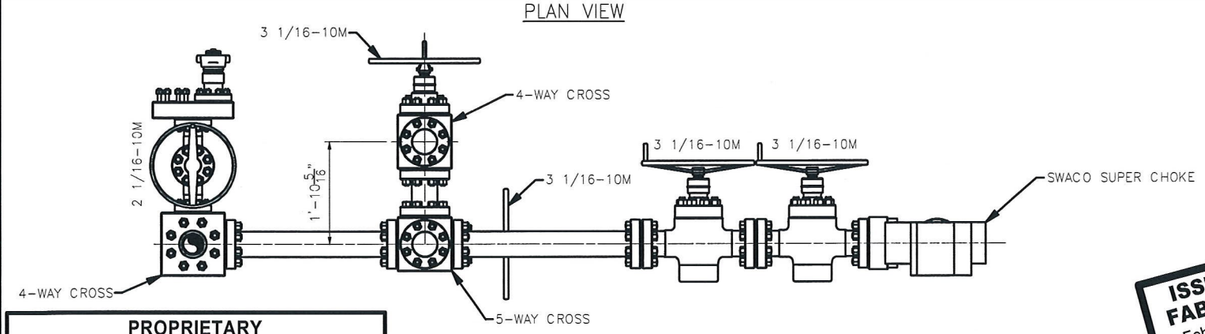

PROPRIETARY

THIS DRAWING AND THE IDEAS AND INFORMATION INCLUDED IN THIS DRAWING ARE PROPRIETARY AND ARE NOT TO BE REPRODUCED, DISTRIBUTED OR DISCLOSED IN ANY MANNER, WITHOUT THE PRIOR, WRITTEN CONSENT OF A DULY AUTHORIZED OFFICER OF HELMERICH & PAYNE INT'L DRILLING CO.

ISSUED FOR FABRICATION
February-10-2014
DRAFTSMAN MWL
ENGINEER

STANDARD TOLERANCES
(UNLESS NOTED)

1. FABRICATION DIMENSIONS:	A-0" TO 24"	± 1/16"
	B-24" TO 120"	± 1/8"
	C-OVER 120"	± 1/4"
2. MACHINED DIMENSIONS:	A-ANGULAR	± :30'
	B-LINEAR (EXPRESSED AS FRACTION)	± .015
	LINEAR (EXPRESSED TO ONE DECIMAL)	± .1
	LINEAR (EXPRESSED TO TWO DECIMALS)	± .015
	LINEAR (EXPRESSED TO THREE DECIMALS)	± .005

REV	DATE	DESCRIPTION	BY
–			

HELMERICH & PAYNE INTERNATIONAL DRILLING CO.

TITLE: 3 CHOKE, 3 LEVEL, 10M CHOKE MANIFOLD G.A.

CUSTOMER: H&P

PROJECT:

DRAWN: MWL	DATE: 2/10/2014	DWG. NO.: HP-D1254	REV: –
SCALE: 3/4"=1'-0"	SHEET: 1 OF 1		

Hose Inspection Report

ContiTech Oil & Marine

Customer	Customer Reference #	CBC Reference #	CBC Inspector	Date of Inspection
H&P Drilling	740021604	COM906112	A. Jaimes	10/17/2016

Hose Manufacturer	Contitech Rubber Industrial

Hose Serial #	62429	**Date of Manufacture**	05/2012
Hose I.D.	3"	**Working Pressure**	10000PSI
Hose Type	Choke and Kill	**Test Pressure**	15000PSI
Manufacturing Standard	API 16C		

Connections

End A: 3.1/16" 10KPsi API Spec 6A Type 6BX Flange	**End B:** 3.1/16" 10Kpsi API Spec 6A Type 6BX Flange
• No damage	• No damage
Material: Carbon Steel	**Material:** Carbon Steel
Seal Face: BX154	**Seal Face:** BX154
Length Before Hydro Test: 16’	**Length After Hydro test:** 16’

Conclusion: Hose #62429 passed the external inspection with no notable damages to the hose armor. Internal borescope of the hose showed no damage to the hose liner. Hose #62429 passed the hydrostatic pressure test by holding a pressure of 15,000PSI for 60 minutes. **Hose #62429 is suitable for continued service.**

Recommendations: In general the hose should be inspected on a regular on-going basis. The frequency and degree of the inspection should as a minimum follow these guidelines:

Visual inspection: Every 3 months (or during installation/removal)
Annual: In-situ pressure test
Initial 5 years service: Major inspection
2nd Major inspection: 8 / 10 years of service
(Detailed description of test regime available upon request, ISS-059 Rev 04)

**NOTE: There are a number of critical elements in the hose that cannot be thoroughly checked through standard inspection techniques. Away from dissecting the hose body, the best way to evaluate the condition of the hose is through review of the operating conditions recorded during the hose service life, in particular maximums and peak conditions.

PASS

Issued By: Alejandro Jaimes
Date: 10/25/2016

Checked By: Jeremy Mckay
Date: 10/25/2016

QF97

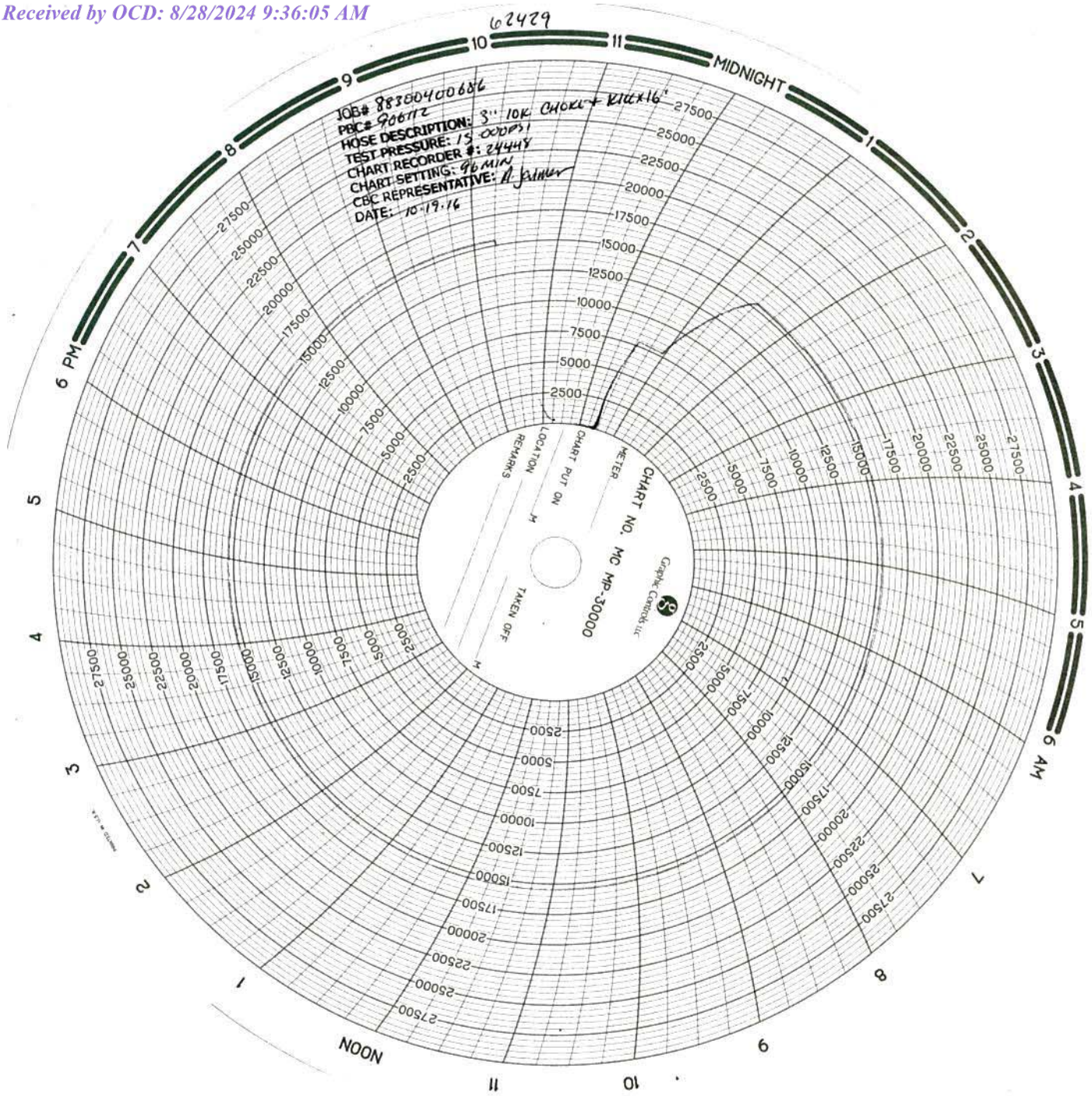
62429
JOB# 883004000686
PBC# 906112
HOSE DESCRIPTION: 3" 10K CHOKE + KILL x 16'
TEST PRESSURE: 15,000PSI
CHART RECORDER #: 24448
CHART SETTING: 96 MIN
CBC REPRESENTATIVE: A. Palmer
DATE: 10-19-16
MIDNIGHT
NOON
6 PM
6 AM
CHART NO.
MC MP-30000
METER
CHART PUT ON
LOCATION
REMARKS
TAKEN OFF
Graphic Controls, LLC

EOG RESOURCES, INC.
Silver Train 17 Fed Com #747H

Hydrogen Sulfide Plan Summary

A. All personnel shall receive proper H2S training in accordance with Onshore Order III.C.3.a.

B. Briefing Area: two perpendicular areas will be designated by signs and readily accessible.

C. Required Emergency Equipment:

- Well control equipment
  a. Flare line 150' from wellhead to be ignited by flare gun.
  b. Choke manifold with a remotely operated choke.
  c. Mud/gas separator

- Protective equipment for essential personnel.

  Breathing apparatus:
  a. Rescue Packs (SCBA) — 1 unit shall be placed at each breathing area, 2 shall be stored in the safety trailer.
  b. Work/Escape packs —4 packs shall be stored on the rig floor with sufficient air hose not to restrict work activity.
  c. Emergency Escape Packs —4 packs shall be stored in the doghouse for emergency evacuation.

  Auxiliary Rescue Equipment:
  a. Stretcher
  b. Two OSHA full body harness
  c. 100 ft 5/8 inch OSHA approved rope
  d. 1-20# class ABC fire extinguisher

- H2S detection and monitoring equipment:
  The stationary detector with three sensors will be placed in the upper dog house if equipped, set to visually alarm @ 10 ppm and audible @ 14 ppm. Calibrate a minimum of every 30 days or as needed. The sensors will be placed in the following places: Rig floor / Bell nipple / End of flow line or where well bore fluid is being discharged.
  (Gas sample tubes will be stored in the safety trailer)

- Visual warning systems.
  a. One color code condition sign will be placed at the entrance to the site reflecting the possible conditions at the site.
  b. A colored condition flag will be on display, reflecting the current condition at the site at the time.
  c. Two wind socks will be placed in strategic locations, visible from all angles.

- Mud program:

EOG RESOURCES, INC.
Silver Train 17 Fed Com #747H

The mud program has been designed to minimize the volume of H2S circulated to surface. The operator will have the necessary mud products to minimize hazards while drilling in H2S bearing zones.

- Metallurgy:
  All drill strings, casings, tubing, wellhead, blowout preventer, drilling spool, kill lines, choke manifold and lines, and valves shall be suitable for H2S service.

- Communication:
  Communication will be via cell phones and land lines where available.

EOG RESOURCES, INC.
Silver Train 17 Fed Com #747H

Emergency Assistance Telephone List

PUBLIC SAFETY:		**911 or**
Lea County Sheriff's Department		(575) 396-3611
Rod Coffman		
Fire Department:		
Carlsbad		(575) 885-3125
Artesia		(575) 746-5050
Hospitals:		
Carlsbad		(575) 887-4121
Artesia		(575) 748-3333
Hobbs		(575) 392-1979
Dept. of Public Safety/Carlsbad		(575) 748-9718
Highway Department		(575) 885-3281
New Mexico Oil Conservation		(575) 476-3440
U.S. Dept. of Labor		(575) 887-1174
EOG Resources, Inc.		
EOG / Midland	Office	(432) 686-3600
Company Drilling Consultants:		
Jett Dueitt	Cell	(432) 230-4840
Blake Burney		
Drilling Engineer		
Steve Munsell	Office	(432) 686-3609
	Cell	(432) 894-1256
Drilling Manager		
Aj Dach	Office	(432) 686-3751
	Cell	(817) 480-1167
Drilling Superintendent		
Jason Townsend	Office	(432) 848-9209
	Cell	(210) 776-5131
H&P Drilling		
H&P Drilling	Office	(432) 563-5757
H&P 415 Drilling Rig	Rig	(432) 230-4840
Tool Pusher:		
Johnathan Craig	Cell	(817) 760-6374
Brad Garrett		
Safety		
Brian Chandler (HSE Manager)	Office	(432) 686-3695
	Cell	(817) 239-0251

Exhibit 4

Well Site Diagram

EOG Resources
Silver Train 17 Fed Com #747H

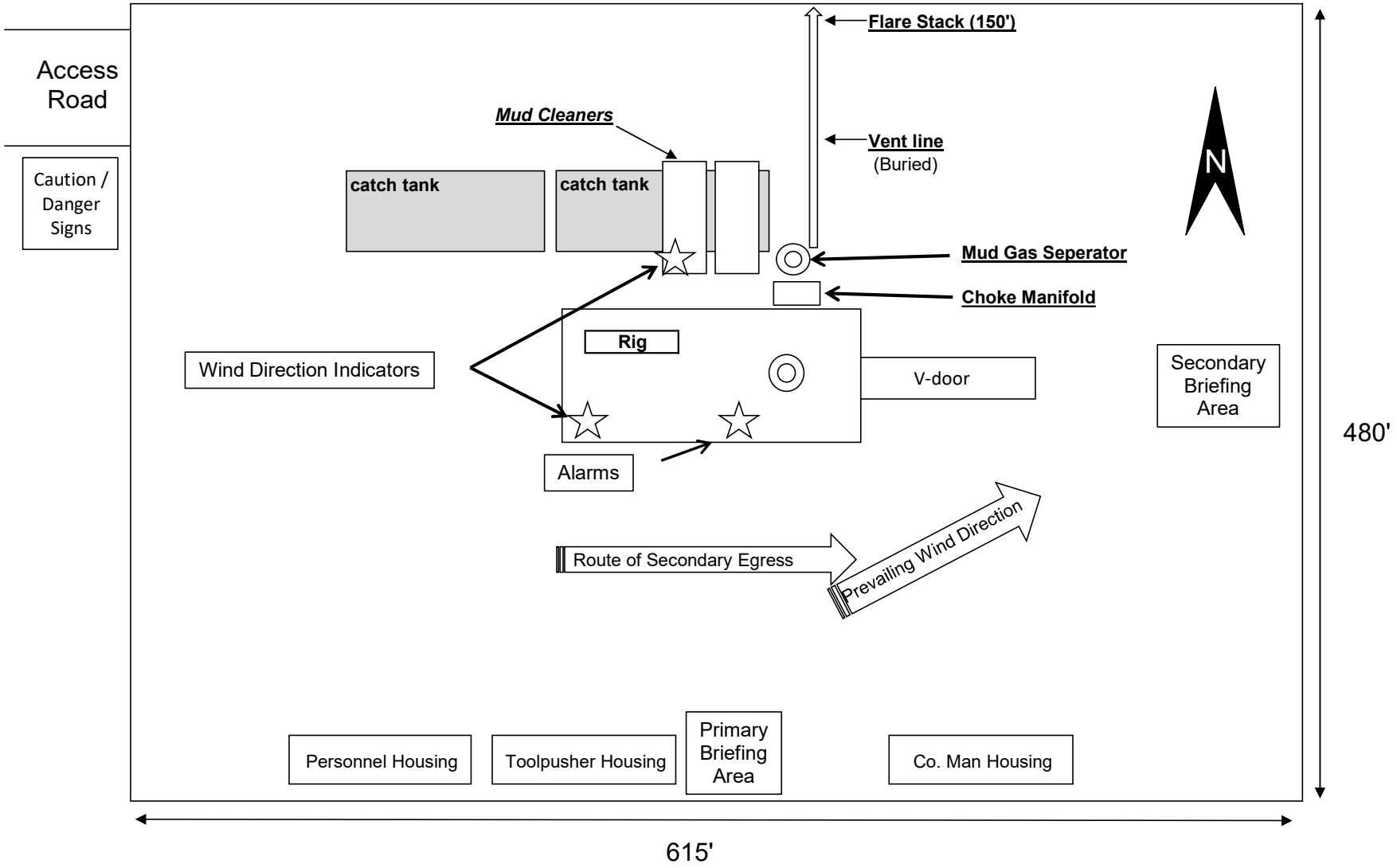

Midland

Lea County, NM (NAD 83 NME)
Silver Train 17 Fed Com
#747H

OH

Plan: Plan #0.1 RT

Standard Planning Report

24 August, 2021

eog resources

Planning Report

Database:	PEDM	**Local Co-ordinate Reference:**	Well #747H
Company:	Midland	**TVD Reference:**	kb = 25' @ 3376.0usft
Project:	Lea County, NM (NAD 83 NME)	**MD Reference:**	kb = 25' @ 3376.0usft
Site:	Silver Train 17 Fed Com	**North Reference:**	Grid
Well:	#747H	**Survey Calculation Method:**	Minimum Curvature
Wellbore:	OH		
Design:	Plan #0.1 RT		

Project Lea County, NM (NAD 83 NME)

Map System:	US State Plane 1983	**System Datum:**	Mean Sea Level
Geo Datum:	North American Datum 1983		
Map Zone:	New Mexico Eastern Zone		

Site Silver Train 17 Fed Com

Site Position:		**Northing:**	410,012.00 usft	**Latitude:**	32° 7' 28.004 N
From:	Map	**Easting:**	799,964.00 usft	**Longitude:**	103° 29' 52.457 W
Position Uncertainty:	0.0 usft	**Slot Radius:**	13-3/16 "		

Well #747H

Well Position	**+N/-S**	0.0 usft	**Northing:**	410,086.00 usft	**Latitude:**	32° 7' 28.515 N
	+E/-W	0.0 usft	**Easting:**	802,829.00 usft	**Longitude:**	103° 29' 19.137 W
Position Uncertainty		0.0 usft	**Wellhead Elevation:**	usft	**Ground Level:**	3,351.0 usft
Grid Convergence:		0.45 °				

Wellbore OH

Magnetics	**Model Name**	**Sample Date**	**Declination (°)**	**Dip Angle (°)**	**Field Strength (nT)**
	IGRF2020	7/27/2021	6.49	59.82	47,432.24426646

Design Plan #0.1 RT

Audit Notes:

Version:		**Phase:**	PLAN	**Tie On Depth:**	0.0

Vertical Section:	**Depth From (TVD) (usft)**	**+N/-S (usft)**	**+E/-W (usft)**	**Direction (°)**
	0.0	0.0	0.0	4.37

Plan Survey Tool Program **Date** 8/24/2021

	Depth From (usft)	**Depth To (usft)**	**Survey (Wellbore)**	**Tool Name**	**Remarks**
1	0.0	20,656.8	Plan #0.1 RT (OH)	EOG MWD+IFR1 MWD + IFR1	

eog resources

Planning Report

Database:	PEDM	**Local Co-ordinate Reference:**	Well #747H
Company:	Midland	**TVD Reference:**	kb = 25' @ 3376.0usft
Project:	Lea County, NM (NAD 83 NME)	**MD Reference:**	kb = 25' @ 3376.0usft
Site:	Silver Train 17 Fed Com	**North Reference:**	Grid
Well:	#747H	**Survey Calculation Method:**	Minimum Curvature
Wellbore:	OH		
Design:	Plan #0.1 RT		

Plan Sections

Measured Depth (usft)	Inclination (°)	Azimuth (°)	Vertical Depth (usft)	+N/-S (usft)	+E/-W (usft)	Dogleg Rate (°/100usft)	Build Rate (°/100usft)	Turn Rate (°/100usft)	TFO (°)	Target
0.0	0.00	0.00	0.0	0.0	0.0	0.00	0.00	0.00	0.00	
1,300.0	0.00	0.00	1,300.0	0.0	0.0	0.00	0.00	0.00	0.00	
1,650.1	7.00	124.47	1,649.3	-12.1	17.6	2.00	2.00	0.00	124.47	
7,517.4	7.00	124.47	7,472.7	-416.9	607.4	0.00	0.00	0.00	0.00	
7,867.5	0.00	0.00	7,822.0	-429.0	625.0	2.00	-2.00	0.00	180.00	
12,618.0	0.00	0.00	12,572.5	-429.0	625.0	0.00	0.00	0.00	0.00	KOP(Silver Train 17 F
12,838.5	26.46	0.00	12,785.2	-379.0	625.0	12.00	12.00	0.00	0.00	FTP(Silver Train 17 F
13,368.0	90.00	359.51	13,049.9	48.5	622.5	12.00	12.00	-0.09	-0.55	
18,119.7	90.00	359.51	13,050.0	4,800.0	582.0	0.00	0.00	0.00	0.00	Fed Perf 1(Silver Trai
20,656.8	90.00	359.54	13,050.0	7,337.0	561.0	0.00	0.00	0.00	87.36	PBHL(Silver Train 17

eog resources

Planning Report

Database:	PEDM	**Local Co-ordinate Reference:**	Well #747H
Company:	Midland	**TVD Reference:**	kb = 25' @ 3376.0usft
Project:	Lea County, NM (NAD 83 NME)	**MD Reference:**	kb = 25' @ 3376.0usft
Site:	Silver Train 17 Fed Com	**North Reference:**	Grid
Well:	#747H	**Survey Calculation Method:**	Minimum Curvature
Wellbore:	OH		
Design:	Plan #0.1 RT		

Planned Survey

Measured Depth (usft)	Inclination (°)	Azimuth (°)	Vertical Depth (usft)	+N/-S (usft)	+E/-W (usft)	Vertical Section (usft)	Dogleg Rate (°/100usft)	Build Rate (°/100usft)	Turn Rate (°/100usft)
0.0	0.00	0.00	0.0	0.0	0.0	0.0	0.00	0.00	0.00
100.0	0.00	0.00	100.0	0.0	0.0	0.0	0.00	0.00	0.00
200.0	0.00	0.00	200.0	0.0	0.0	0.0	0.00	0.00	0.00
300.0	0.00	0.00	300.0	0.0	0.0	0.0	0.00	0.00	0.00
400.0	0.00	0.00	400.0	0.0	0.0	0.0	0.00	0.00	0.00
500.0	0.00	0.00	500.0	0.0	0.0	0.0	0.00	0.00	0.00
600.0	0.00	0.00	600.0	0.0	0.0	0.0	0.00	0.00	0.00
700.0	0.00	0.00	700.0	0.0	0.0	0.0	0.00	0.00	0.00
800.0	0.00	0.00	800.0	0.0	0.0	0.0	0.00	0.00	0.00
900.0	0.00	0.00	900.0	0.0	0.0	0.0	0.00	0.00	0.00
1,000.0	0.00	0.00	1,000.0	0.0	0.0	0.0	0.00	0.00	0.00
1,100.0	0.00	0.00	1,100.0	0.0	0.0	0.0	0.00	0.00	0.00
1,200.0	0.00	0.00	1,200.0	0.0	0.0	0.0	0.00	0.00	0.00
1,300.0	0.00	0.00	1,300.0	0.0	0.0	0.0	0.00	0.00	0.00
1,400.0	2.00	124.47	1,400.0	-1.0	1.4	-0.9	2.00	2.00	0.00
1,500.0	4.00	124.47	1,499.8	-3.9	5.8	-3.5	2.00	2.00	0.00
1,600.0	6.00	124.47	1,599.5	-8.9	12.9	-7.9	2.00	2.00	0.00
1,650.1	7.00	124.47	1,649.3	-12.1	17.6	-10.7	2.00	2.00	0.00
1,700.0	7.00	124.47	1,698.8	-15.5	22.6	-13.8	0.00	0.00	0.00
1,800.0	7.00	124.47	1,798.0	-22.4	32.7	-19.9	0.00	0.00	0.00
1,900.0	7.00	124.47	1,897.3	-29.3	42.7	-26.0	0.00	0.00	0.00
2,000.0	7.00	124.47	1,996.5	-36.2	52.8	-32.1	0.00	0.00	0.00
2,100.0	7.00	124.47	2,095.8	-43.1	62.8	-38.2	0.00	0.00	0.00
2,200.0	7.00	124.47	2,195.0	-50.0	72.9	-44.3	0.00	0.00	0.00
2,300.0	7.00	124.47	2,294.3	-56.9	82.9	-50.4	0.00	0.00	0.00
2,400.0	7.00	124.47	2,393.5	-63.8	93.0	-56.6	0.00	0.00	0.00
2,500.0	7.00	124.47	2,492.8	-70.7	103.0	-62.7	0.00	0.00	0.00
2,600.0	7.00	124.47	2,592.0	-77.6	113.1	-68.8	0.00	0.00	0.00
2,700.0	7.00	124.47	2,691.3	-84.5	123.1	-74.9	0.00	0.00	0.00
2,800.0	7.00	124.47	2,790.6	-91.4	133.2	-81.0	0.00	0.00	0.00
2,900.0	7.00	124.47	2,889.8	-98.3	143.3	-87.1	0.00	0.00	0.00
3,000.0	7.00	124.47	2,989.1	-105.2	153.3	-93.2	0.00	0.00	0.00
3,100.0	7.00	124.47	3,088.3	-112.1	163.4	-99.3	0.00	0.00	0.00
3,200.0	7.00	124.47	3,187.6	-119.0	173.4	-105.5	0.00	0.00	0.00
3,300.0	7.00	124.47	3,286.8	-125.9	183.5	-111.6	0.00	0.00	0.00
3,400.0	7.00	124.47	3,386.1	-132.8	193.5	-117.7	0.00	0.00	0.00
3,500.0	7.00	124.47	3,485.3	-139.7	203.6	-123.8	0.00	0.00	0.00
3,600.0	7.00	124.47	3,584.6	-146.6	213.6	-129.9	0.00	0.00	0.00
3,700.0	7.00	124.47	3,683.8	-153.5	223.7	-136.0	0.00	0.00	0.00
3,800.0	7.00	124.47	3,783.1	-160.4	233.7	-142.1	0.00	0.00	0.00
3,900.0	7.00	124.47	3,882.3	-167.3	243.8	-148.3	0.00	0.00	0.00
4,000.0	7.00	124.47	3,981.6	-174.2	253.8	-154.4	0.00	0.00	0.00
4,100.0	7.00	124.47	4,080.9	-181.1	263.9	-160.5	0.00	0.00	0.00
4,200.0	7.00	124.47	4,180.1	-188.0	273.9	-166.6	0.00	0.00	0.00
4,300.0	7.00	124.47	4,279.4	-194.9	284.0	-172.7	0.00	0.00	0.00
4,400.0	7.00	124.47	4,378.6	-201.8	294.0	-178.8	0.00	0.00	0.00
4,500.0	7.00	124.47	4,477.9	-208.7	304.1	-184.9	0.00	0.00	0.00
4,600.0	7.00	124.47	4,577.1	-215.6	314.1	-191.0	0.00	0.00	0.00
4,700.0	7.00	124.47	4,676.4	-222.5	324.2	-197.2	0.00	0.00	0.00
4,800.0	7.00	124.47	4,775.6	-229.4	334.2	-203.3	0.00	0.00	0.00
4,900.0	7.00	124.47	4,874.9	-236.3	344.3	-209.4	0.00	0.00	0.00
5,000.0	7.00	124.47	4,974.1	-243.2	354.3	-215.5	0.00	0.00	0.00
5,100.0	7.00	124.47	5,073.4	-250.1	364.4	-221.6	0.00	0.00	0.00
5,200.0	7.00	124.47	5,172.6	-257.0	374.4	-227.7	0.00	0.00	0.00

eog resources

Planning Report

Database:	PEDM	**Local Co-ordinate Reference:**	Well #747H
Company:	Midland	**TVD Reference:**	kb = 25' @ 3376.0usft
Project:	Lea County, NM (NAD 83 NME)	**MD Reference:**	kb = 25' @ 3376.0usft
Site:	Silver Train 17 Fed Com	**North Reference:**	Grid
Well:	#747H	**Survey Calculation Method:**	Minimum Curvature
Wellbore:	OH		
Design:	Plan #0.1 RT		

Planned Survey

Measured Depth (usft)	Inclination (°)	Azimuth (°)	Vertical Depth (usft)	+N/-S (usft)	+E/-W (usft)	Vertical Section (usft)	Dogleg Rate (°/100usft)	Build Rate (°/100usft)	Turn Rate (°/100usft)
5,300.0	7.00	124.47	5,271.9	-263.9	384.5	-233.8	0.00	0.00	0.00
5,400.0	7.00	124.47	5,371.2	-270.8	394.5	-239.9	0.00	0.00	0.00
5,500.0	7.00	124.47	5,470.4	-277.7	404.6	-246.1	0.00	0.00	0.00
5,600.0	7.00	124.47	5,569.7	-284.6	414.7	-252.2	0.00	0.00	0.00
5,700.0	7.00	124.47	5,668.9	-291.5	424.7	-258.3	0.00	0.00	0.00
5,800.0	7.00	124.47	5,768.2	-298.4	434.8	-264.4	0.00	0.00	0.00
5,900.0	7.00	124.47	5,867.4	-305.3	444.8	-270.5	0.00	0.00	0.00
6,000.0	7.00	124.47	5,966.7	-312.2	454.9	-276.6	0.00	0.00	0.00
6,100.0	7.00	124.47	6,065.9	-319.1	464.9	-282.7	0.00	0.00	0.00
6,200.0	7.00	124.47	6,165.2	-326.0	475.0	-288.9	0.00	0.00	0.00
6,300.0	7.00	124.47	6,264.4	-332.9	485.0	-295.0	0.00	0.00	0.00
6,400.0	7.00	124.47	6,363.7	-339.8	495.1	-301.1	0.00	0.00	0.00
6,500.0	7.00	124.47	6,462.9	-346.7	505.1	-307.2	0.00	0.00	0.00
6,600.0	7.00	124.47	6,562.2	-353.6	515.2	-313.3	0.00	0.00	0.00
6,700.0	7.00	124.47	6,661.5	-360.5	525.2	-319.4	0.00	0.00	0.00
6,800.0	7.00	124.47	6,760.7	-367.4	535.3	-325.5	0.00	0.00	0.00
6,900.0	7.00	124.47	6,860.0	-374.3	545.3	-331.6	0.00	0.00	0.00
7,000.0	7.00	124.47	6,959.2	-381.2	555.4	-337.8	0.00	0.00	0.00
7,100.0	7.00	124.47	7,058.5	-388.1	565.4	-343.9	0.00	0.00	0.00
7,200.0	7.00	124.47	7,157.7	-395.0	575.5	-350.0	0.00	0.00	0.00
7,300.0	7.00	124.47	7,257.0	-401.9	585.5	-356.1	0.00	0.00	0.00
7,400.0	7.00	124.47	7,356.2	-408.8	595.6	-362.2	0.00	0.00	0.00
7,500.0	7.00	124.47	7,455.5	-415.7	605.6	-368.3	0.00	0.00	0.00
7,517.4	7.00	124.47	7,472.7	-416.9	607.4	-369.4	0.00	0.00	0.00
7,600.0	5.35	124.47	7,554.9	-421.9	614.7	-373.8	2.00	-2.00	0.00
7,700.0	3.35	124.47	7,654.6	-426.2	621.0	-377.6	2.00	-2.00	0.00
7,800.0	1.35	124.47	7,754.5	-428.5	624.3	-379.7	2.00	-2.00	0.00
7,867.5	0.00	0.00	7,822.0	-429.0	625.0	-380.1	2.00	-2.00	0.00
7,900.0	0.00	0.00	7,854.5	-429.0	625.0	-380.1	0.00	0.00	0.00
8,000.0	0.00	0.00	7,954.5	-429.0	625.0	-380.1	0.00	0.00	0.00
8,100.0	0.00	0.00	8,054.5	-429.0	625.0	-380.1	0.00	0.00	0.00
8,200.0	0.00	0.00	8,154.5	-429.0	625.0	-380.1	0.00	0.00	0.00
8,300.0	0.00	0.00	8,254.5	-429.0	625.0	-380.1	0.00	0.00	0.00
8,400.0	0.00	0.00	8,354.5	-429.0	625.0	-380.1	0.00	0.00	0.00
8,500.0	0.00	0.00	8,454.5	-429.0	625.0	-380.1	0.00	0.00	0.00
8,600.0	0.00	0.00	8,554.5	-429.0	625.0	-380.1	0.00	0.00	0.00
8,700.0	0.00	0.00	8,654.5	-429.0	625.0	-380.1	0.00	0.00	0.00
8,800.0	0.00	0.00	8,754.5	-429.0	625.0	-380.1	0.00	0.00	0.00
8,900.0	0.00	0.00	8,854.5	-429.0	625.0	-380.1	0.00	0.00	0.00
9,000.0	0.00	0.00	8,954.5	-429.0	625.0	-380.1	0.00	0.00	0.00
9,100.0	0.00	0.00	9,054.5	-429.0	625.0	-380.1	0.00	0.00	0.00
9,200.0	0.00	0.00	9,154.5	-429.0	625.0	-380.1	0.00	0.00	0.00
9,300.0	0.00	0.00	9,254.5	-429.0	625.0	-380.1	0.00	0.00	0.00
9,400.0	0.00	0.00	9,354.5	-429.0	625.0	-380.1	0.00	0.00	0.00
9,500.0	0.00	0.00	9,454.5	-429.0	625.0	-380.1	0.00	0.00	0.00
9,600.0	0.00	0.00	9,554.5	-429.0	625.0	-380.1	0.00	0.00	0.00
9,700.0	0.00	0.00	9,654.5	-429.0	625.0	-380.1	0.00	0.00	0.00
9,800.0	0.00	0.00	9,754.5	-429.0	625.0	-380.1	0.00	0.00	0.00
9,900.0	0.00	0.00	9,854.5	-429.0	625.0	-380.1	0.00	0.00	0.00
10,000.0	0.00	0.00	9,954.5	-429.0	625.0	-380.1	0.00	0.00	0.00
10,100.0	0.00	0.00	10,054.5	-429.0	625.0	-380.1	0.00	0.00	0.00
10,200.0	0.00	0.00	10,154.5	-429.0	625.0	-380.1	0.00	0.00	0.00
10,300.0	0.00	0.00	10,254.5	-429.0	625.0	-380.1	0.00	0.00	0.00
10,400.0	0.00	0.00	10,354.5	-429.0	625.0	-380.1	0.00	0.00	0.00

eog resources

Planning Report

Database:	PEDM	**Local Co-ordinate Reference:**	Well #747H
Company:	Midland	**TVD Reference:**	kb = 25' @ 3376.0usft
Project:	Lea County, NM (NAD 83 NME)	**MD Reference:**	kb = 25' @ 3376.0usft
Site:	Silver Train 17 Fed Com	**North Reference:**	Grid
Well:	#747H	**Survey Calculation Method:**	Minimum Curvature
Wellbore:	OH		
Design:	Plan #0.1 RT		

Planned Survey

Measured Depth (usft)	Inclination (°)	Azimuth (°)	Vertical Depth (usft)	+N/-S (usft)	+E/-W (usft)	Vertical Section (usft)	Dogleg Rate (°/100usft)	Build Rate (°/100usft)	Turn Rate (°/100usft)
10,500.0	0.00	0.00	10,454.5	-429.0	625.0	-380.1	0.00	0.00	0.00
10,600.0	0.00	0.00	10,554.5	-429.0	625.0	-380.1	0.00	0.00	0.00
10,700.0	0.00	0.00	10,654.5	-429.0	625.0	-380.1	0.00	0.00	0.00
10,800.0	0.00	0.00	10,754.5	-429.0	625.0	-380.1	0.00	0.00	0.00
10,900.0	0.00	0.00	10,854.5	-429.0	625.0	-380.1	0.00	0.00	0.00
11,000.0	0.00	0.00	10,954.5	-429.0	625.0	-380.1	0.00	0.00	0.00
11,100.0	0.00	0.00	11,054.5	-429.0	625.0	-380.1	0.00	0.00	0.00
11,200.0	0.00	0.00	11,154.5	-429.0	625.0	-380.1	0.00	0.00	0.00
11,300.0	0.00	0.00	11,254.5	-429.0	625.0	-380.1	0.00	0.00	0.00
11,400.0	0.00	0.00	11,354.5	-429.0	625.0	-380.1	0.00	0.00	0.00
11,500.0	0.00	0.00	11,454.5	-429.0	625.0	-380.1	0.00	0.00	0.00
11,600.0	0.00	0.00	11,554.5	-429.0	625.0	-380.1	0.00	0.00	0.00
11,700.0	0.00	0.00	11,654.5	-429.0	625.0	-380.1	0.00	0.00	0.00
11,800.0	0.00	0.00	11,754.5	-429.0	625.0	-380.1	0.00	0.00	0.00
11,900.0	0.00	0.00	11,854.5	-429.0	625.0	-380.1	0.00	0.00	0.00
12,000.0	0.00	0.00	11,954.5	-429.0	625.0	-380.1	0.00	0.00	0.00
12,100.0	0.00	0.00	12,054.5	-429.0	625.0	-380.1	0.00	0.00	0.00
12,200.0	0.00	0.00	12,154.5	-429.0	625.0	-380.1	0.00	0.00	0.00
12,300.0	0.00	0.00	12,254.5	-429.0	625.0	-380.1	0.00	0.00	0.00
12,400.0	0.00	0.00	12,354.5	-429.0	625.0	-380.1	0.00	0.00	0.00
12,500.0	0.00	0.00	12,454.5	-429.0	625.0	-380.1	0.00	0.00	0.00
12,600.0	0.00	0.00	12,554.5	-429.0	625.0	-380.1	0.00	0.00	0.00
12,618.0	0.00	0.00	12,572.5	-429.0	625.0	-380.1	0.00	0.00	0.00
KOP(Silver Train 17 Fed Com #747H)									
12,625.0	0.84	0.00	12,579.5	-428.9	625.0	-380.1	12.00	12.00	0.00
12,650.0	3.84	0.00	12,604.5	-427.9	625.0	-379.0	12.00	12.00	0.00
12,675.0	6.84	0.00	12,629.4	-425.6	625.0	-376.7	12.00	12.00	0.00
12,700.0	9.84	0.00	12,654.1	-422.0	625.0	-373.1	12.00	12.00	0.00
12,725.0	12.84	0.00	12,678.6	-417.1	625.0	-368.2	12.00	12.00	0.00
12,750.0	15.84	0.00	12,702.8	-410.9	625.0	-362.0	12.00	12.00	0.00
12,775.0	18.84	0.00	12,726.7	-403.4	625.0	-354.6	12.00	12.00	0.00
12,800.0	21.84	0.00	12,750.1	-394.7	625.0	-345.9	12.00	12.00	0.00
12,825.0	24.84	0.00	12,773.1	-384.8	625.0	-336.1	12.00	12.00	0.00
12,838.5	26.46	0.00	12,785.2	-379.0	625.0	-330.2	12.00	12.00	0.00
FTP(Silver Train 17 Fed Com #747H)									
12,850.0	27.84	359.97	12,795.5	-373.7	625.0	-325.0	12.00	12.00	-0.24
12,875.0	30.84	359.92	12,817.3	-361.5	625.0	-312.8	12.00	12.00	-0.21
12,900.0	33.84	359.87	12,838.4	-348.1	625.0	-299.5	12.00	12.00	-0.18
12,925.0	36.84	359.84	12,858.8	-333.7	624.9	-285.0	12.00	12.00	-0.15
12,950.0	39.84	359.80	12,878.4	-318.1	624.9	-269.6	12.00	12.00	-0.13
12,975.0	42.84	359.77	12,897.1	-301.6	624.8	-253.1	12.00	12.00	-0.12
13,000.0	45.84	359.75	12,915.0	-284.2	624.7	-235.7	12.00	12.00	-0.10
13,025.0	48.84	359.72	12,932.0	-265.8	624.7	-217.4	12.00	12.00	-0.09
13,050.0	51.84	359.70	12,947.9	-246.5	624.6	-198.2	12.00	12.00	-0.09
13,075.0	54.84	359.68	12,962.8	-226.5	624.5	-178.2	12.00	12.00	-0.08
13,100.0	57.84	359.66	12,976.7	-205.7	624.3	-157.5	12.00	12.00	-0.07
13,125.0	60.84	359.65	12,989.4	-184.2	624.2	-136.1	12.00	12.00	-0.07
13,150.0	63.84	359.63	13,001.0	-162.0	624.1	-114.0	12.00	12.00	-0.06
13,175.0	66.84	359.62	13,011.5	-139.3	623.9	-91.3	12.00	12.00	-0.06
13,200.0	69.84	359.60	13,020.7	-116.1	623.8	-68.2	12.00	12.00	-0.06
13,225.0	72.84	359.59	13,028.7	-92.4	623.6	-44.6	12.00	12.00	-0.06
13,250.0	75.84	359.57	13,035.4	-68.3	623.4	-20.6	12.00	12.00	-0.05
13,275.0	78.84	359.56	13,040.9	-43.9	623.2	3.7	12.00	12.00	-0.05
13,300.0	81.84	359.55	13,045.1	-19.3	623.0	28.2	12.00	12.00	-0.05

eog resources

Planning Report

Database:	PEDM	**Local Co-ordinate Reference:**	Well #747H
Company:	Midland	**TVD Reference:**	kb = 25' @ 3376.0usft
Project:	Lea County, NM (NAD 83 NME)	**MD Reference:**	kb = 25' @ 3376.0usft
Site:	Silver Train 17 Fed Com	**North Reference:**	Grid
Well:	#747H	**Survey Calculation Method:**	Minimum Curvature
Wellbore:	OH		
Design:	Plan #0.1 RT		

Planned Survey

Measured Depth (usft)	Inclination (°)	Azimuth (°)	Vertical Depth (usft)	+N/-S (usft)	+E/-W (usft)	Vertical Section (usft)	Dogleg Rate (°/100usft)	Build Rate (°/100usft)	Turn Rate (°/100usft)
13,325.0	84.84	359.53	13,048.0	5.5	622.8	53.0	12.00	12.00	-0.05
13,350.0	87.84	359.52	13,049.6	30.5	622.6	77.8	12.00	12.00	-0.05
13,368.0	90.00	359.51	13,049.9	48.5	622.5	95.8	12.00	12.00	-0.05
13,400.0	90.00	359.51	13,049.9	80.5	622.2	127.7	0.00	0.00	0.00
13,500.0	90.00	359.51	13,049.9	180.5	621.4	227.3	0.00	0.00	0.00
13,600.0	90.00	359.51	13,049.9	280.5	620.5	326.9	0.00	0.00	0.00
13,700.0	90.00	359.51	13,050.0	380.4	619.7	426.6	0.00	0.00	0.00
13,800.0	90.00	359.51	13,050.0	480.4	618.8	526.2	0.00	0.00	0.00
13,900.0	90.00	359.51	13,050.0	580.4	617.9	625.9	0.00	0.00	0.00
14,000.0	90.00	359.51	13,050.0	680.4	617.1	725.5	0.00	0.00	0.00
14,100.0	90.00	359.51	13,050.0	780.4	616.2	825.1	0.00	0.00	0.00
14,200.0	90.00	359.51	13,050.0	880.4	615.4	924.8	0.00	0.00	0.00
14,300.0	90.00	359.51	13,050.0	980.4	614.5	1,024.4	0.00	0.00	0.00
14,400.0	90.00	359.51	13,050.0	1,080.4	613.7	1,124.1	0.00	0.00	0.00
14,500.0	90.00	359.51	13,050.0	1,180.4	612.8	1,223.7	0.00	0.00	0.00
14,600.0	90.00	359.51	13,050.0	1,280.4	612.0	1,323.3	0.00	0.00	0.00
14,700.0	90.00	359.51	13,050.0	1,380.4	611.1	1,423.0	0.00	0.00	0.00
14,800.0	90.00	359.51	13,050.0	1,480.4	610.3	1,522.6	0.00	0.00	0.00
14,900.0	90.00	359.51	13,050.0	1,580.4	609.4	1,622.3	0.00	0.00	0.00
15,000.0	90.00	359.51	13,050.0	1,680.4	608.6	1,721.9	0.00	0.00	0.00
15,100.0	90.00	359.51	13,050.0	1,780.4	607.7	1,821.5	0.00	0.00	0.00
15,200.0	90.00	359.51	13,050.0	1,880.4	606.9	1,921.2	0.00	0.00	0.00
15,300.0	90.00	359.51	13,050.0	1,980.4	606.0	2,020.8	0.00	0.00	0.00
15,400.0	90.00	359.51	13,050.0	2,080.4	605.2	2,120.5	0.00	0.00	0.00
15,500.0	90.00	359.51	13,050.0	2,180.4	604.3	2,220.1	0.00	0.00	0.00
15,600.0	90.00	359.51	13,050.0	2,280.4	603.5	2,319.8	0.00	0.00	0.00
15,700.0	90.00	359.51	13,050.0	2,380.4	602.6	2,419.4	0.00	0.00	0.00
15,800.0	90.00	359.51	13,050.0	2,480.4	601.8	2,519.0	0.00	0.00	0.00
15,900.0	90.00	359.51	13,050.0	2,580.4	600.9	2,618.7	0.00	0.00	0.00
16,000.0	90.00	359.51	13,050.0	2,680.4	600.1	2,718.3	0.00	0.00	0.00
16,100.0	90.00	359.51	13,050.0	2,780.4	599.2	2,818.0	0.00	0.00	0.00
16,200.0	90.00	359.51	13,050.0	2,880.4	598.4	2,917.6	0.00	0.00	0.00
16,300.0	90.00	359.51	13,050.0	2,980.4	597.5	3,017.2	0.00	0.00	0.00
16,400.0	90.00	359.51	13,050.0	3,080.4	596.7	3,116.9	0.00	0.00	0.00
16,500.0	90.00	359.51	13,050.0	3,180.3	595.8	3,216.5	0.00	0.00	0.00
16,600.0	90.00	359.51	13,050.0	3,280.3	594.9	3,316.2	0.00	0.00	0.00
16,700.0	90.00	359.51	13,050.0	3,380.3	594.1	3,415.8	0.00	0.00	0.00
16,800.0	90.00	359.51	13,050.0	3,480.3	593.2	3,515.4	0.00	0.00	0.00
16,900.0	90.00	359.51	13,050.0	3,580.3	592.4	3,615.1	0.00	0.00	0.00
17,000.0	90.00	359.51	13,050.0	3,680.3	591.5	3,714.7	0.00	0.00	0.00
17,100.0	90.00	359.51	13,050.0	3,780.3	590.7	3,814.4	0.00	0.00	0.00
17,200.0	90.00	359.51	13,050.0	3,880.3	589.8	3,914.0	0.00	0.00	0.00
17,300.0	90.00	359.51	13,050.0	3,980.3	589.0	4,013.6	0.00	0.00	0.00
17,400.0	90.00	359.51	13,050.0	4,080.3	588.1	4,113.3	0.00	0.00	0.00
17,500.0	90.00	359.51	13,050.0	4,180.3	587.3	4,212.9	0.00	0.00	0.00
17,600.0	90.00	359.51	13,050.0	4,280.3	586.4	4,312.6	0.00	0.00	0.00
17,700.0	90.00	359.51	13,050.0	4,380.3	585.6	4,412.2	0.00	0.00	0.00
17,800.0	90.00	359.51	13,050.0	4,480.3	584.7	4,511.8	0.00	0.00	0.00
17,900.0	90.00	359.51	13,050.0	4,580.3	583.9	4,611.5	0.00	0.00	0.00
18,000.0	90.00	359.51	13,050.0	4,680.3	583.0	4,711.1	0.00	0.00	0.00
18,100.0	90.00	359.51	13,050.0	4,780.3	582.2	4,810.8	0.00	0.00	0.00
18,119.7	90.00	359.51	13,050.0	4,800.0	582.0	4,830.4	0.00	0.00	0.00

Fed Perf 1(Silver Train 17 Fed Com #747H)

eog resources

Planning Report

Database:	PEDM	**Local Co-ordinate Reference:**	Well #747H
Company:	Midland	**TVD Reference:**	kb = 25' @ 3376.0usft
Project:	Lea County, NM (NAD 83 NME)	**MD Reference:**	kb = 25' @ 3376.0usft
Site:	Silver Train 17 Fed Com	**North Reference:**	Grid
Well:	#747H	**Survey Calculation Method:**	Minimum Curvature
Wellbore:	OH		
Design:	Plan #0.1 RT		

Planned Survey

Measured Depth (usft)	Inclination (°)	Azimuth (°)	Vertical Depth (usft)	+N/-S (usft)	+E/-W (usft)	Vertical Section (usft)	Dogleg Rate (°/100usft)	Build Rate (°/100usft)	Turn Rate (°/100usft)
18,200.0	90.00	359.51	13,050.0	4,880.3	581.3	4,910.4	0.00	0.00	0.00
18,300.0	90.00	359.51	13,050.0	4,980.3	580.5	5,010.0	0.00	0.00	0.00
18,400.0	90.00	359.51	13,050.0	5,080.3	579.6	5,109.7	0.00	0.00	0.00
18,500.0	90.00	359.52	13,050.0	5,180.3	578.8	5,209.3	0.00	0.00	0.00
18,600.0	90.00	359.52	13,050.0	5,280.3	577.9	5,309.0	0.00	0.00	0.00
18,700.0	90.00	359.52	13,050.0	5,380.3	577.1	5,408.6	0.00	0.00	0.00
18,800.0	90.00	359.52	13,050.0	5,480.3	576.2	5,508.2	0.00	0.00	0.00
18,900.0	90.00	359.52	13,050.0	5,580.3	575.4	5,607.9	0.00	0.00	0.00
19,000.0	90.00	359.52	13,050.0	5,680.3	574.6	5,707.5	0.00	0.00	0.00
19,100.0	90.00	359.52	13,050.0	5,780.3	573.7	5,807.2	0.00	0.00	0.00
19,200.0	90.00	359.52	13,050.0	5,880.3	572.9	5,906.8	0.00	0.00	0.00
19,300.0	90.00	359.52	13,050.0	5,980.2	572.1	6,006.5	0.00	0.00	0.00
19,400.0	90.00	359.53	13,050.0	6,080.2	571.2	6,106.1	0.00	0.00	0.00
19,500.0	90.00	359.53	13,050.0	6,180.2	570.4	6,205.7	0.00	0.00	0.00
19,600.0	90.00	359.53	13,050.0	6,280.2	569.6	6,305.4	0.00	0.00	0.00
19,700.0	90.00	359.53	13,050.0	6,380.2	568.8	6,405.0	0.00	0.00	0.00
19,800.0	90.00	359.53	13,050.0	6,480.2	568.0	6,504.7	0.00	0.00	0.00
19,900.0	90.00	359.53	13,050.0	6,580.2	567.1	6,604.3	0.00	0.00	0.00
20,000.0	90.00	359.53	13,050.0	6,680.2	566.3	6,704.0	0.00	0.00	0.00
20,100.0	90.00	359.53	13,050.0	6,780.2	565.5	6,803.6	0.00	0.00	0.00
20,200.0	90.00	359.53	13,050.0	6,880.2	564.7	6,903.2	0.00	0.00	0.00
20,300.0	90.00	359.54	13,050.0	6,980.2	563.9	7,002.9	0.00	0.00	0.00
20,400.0	90.00	359.54	13,050.0	7,080.2	563.1	7,102.5	0.00	0.00	0.00
20,500.0	90.00	359.54	13,050.0	7,180.2	562.3	7,202.2	0.00	0.00	0.00
20,600.0	90.00	359.54	13,050.0	7,280.2	561.5	7,301.8	0.00	0.00	0.00
20,656.8	90.00	359.54	13,050.0	7,337.0	561.0	7,358.4	0.00	0.00	0.00
PBHL(Silver Train 17 Fed Com #747H)									

Design Targets

Target Name - hit/miss target - Shape	Dip Angle (°)	Dip Dir. (°)	TVD (usft)	+N/-S (usft)	+E/-W (usft)	Northing (usft)	Easting (usft)	Latitude	Longitude
KOP(Silver Train 17 Fed - plan hits target center - Point	0.00	0.00	12,572.5	-429.0	625.0	409,657.00	803,454.00	32° 7' 24.222 N	103° 29' 11.909 W
FTP(Silver Train 17 Fed - plan hits target center - Point	0.00	0.00	12,785.2	-379.0	625.0	409,707.00	803,454.00	32° 7' 24.717 N	103° 29' 11.904 W
Fed Perf 1(Silver Train 1 - plan hits target center - Point	0.00	0.00	13,050.0	4,800.0	582.0	414,886.00	803,411.00	32° 8' 15.967 N	103° 29' 11.931 W
PBHL(Silver Train 17 Fe - plan hits target center - Point	0.00	0.00	13,050.0	7,337.0	561.0	417,423.00	803,390.00	32° 8' 41.072 N	103° 29' 11.943 W

Received by OCD: 8/28/2024 9:36:05 AM

eog resources

Lea County, NM (NAD 83 NME)

Silver Train 17 Fed Com #747H

Plan #0.1 RT

Azimuths to Grid North
True North: -0.45°
Magnetic North: 6.04°

Magnetic Field
Strength: 47432.2nT
Dip Angle: 59.82°
Date: 7/27/2021
Model: IGRF2020

To convert a Magnetic Direction to a Grid Direction, Add 6.04°
To convert a Magnetic Direction to a True Direction, Add 6.49° East
To convert a True Direction to a Grid Direction, Subtract 0.45°

PROJECT DETAILS: Lea County, NM (NAD 83 NME)

Geodetic System:	US State Plane 1983
Datum:	North American Datum 1983
Ellipsoid:	GRS 1980
Zone:	New Mexico Eastern Zone
System Datum:	Mean Sea Level

WELL DETAILS: #747H

3351.0
kb = 25' @ 3376.0usft

Northing	Easting	Latitude	Longitude
410086.00	802829.00	32° 7' 28.515 N	103° 29' 19.137 W

SECTION DETAILS

Sec	MD	Inc	Azi	TVD	+N/-S	+E/-W	Dleg	TFace	VSect	Target
1	0.0	0.00	0.00	0.0	0.0	0.0	0.00	0.00	0.0	
2	1300.0	0.00	0.00	1300.0	0.0	0.0	0.00	0.00	0.0	
3	1650.1	7.00	124.47	1649.3	-12.1	17.6	2.00	124.47	-10.7	
4	7517.4	7.00	124.47	7472.7	-416.9	607.4	0.00	0.00	-369.4	
5	7867.5	0.00	0.00	7822.0	-429.0	625.0	2.00	180.00	-380.1	
6	12618.0	0.00	0.00	12572.5	-429.0	625.0	0.00	0.00	-380.1	KOP(Silver Train 17 Fed Com #747H)
7	12838.5	26.46	0.00	12785.2	-379.0	625.0	12.00	0.00	-330.2	FTP(Silver Train 17 Fed Com #747H)
8	13368.0	90.00	359.51	13049.9	48.5	622.5	12.00	-0.55	95.8	
9	18119.7	90.00	359.51	13050.0	4800.0	582.0	0.00	0.00	4830.4	Fed Perf 1(Silver Train 17 Fed Com #747H)
10	20656.8	90.00	359.54	13050.0	7337.0	561.0	0.00	87.36	7358.4	PBHL(Silver Train 17 Fed Com #747H)

CASING DETAILS

No casing data is available

WELLBORE TARGET DETAILS (MAP CO-ORDINATES)

Name	TVD	+N/-S	+E/-W	Northing	Easting
KOP(Silver Train 17 Fed Com #747H)	12572.5	-429.0	625.0	409657.00	803454.00
FTP(Silver Train 17 Fed Com #747H)	12785.2	-379.0	625.0	409707.00	803454.00
Fed Perf 1(Silver Train 17 Fed Com #747H)	13050.0	4800.0	582.0	414886.00	803411.00
PBHL(Silver Train 17 Fed Com #747H)	13050.0	7337.0	561.0	417423.00	803390.00

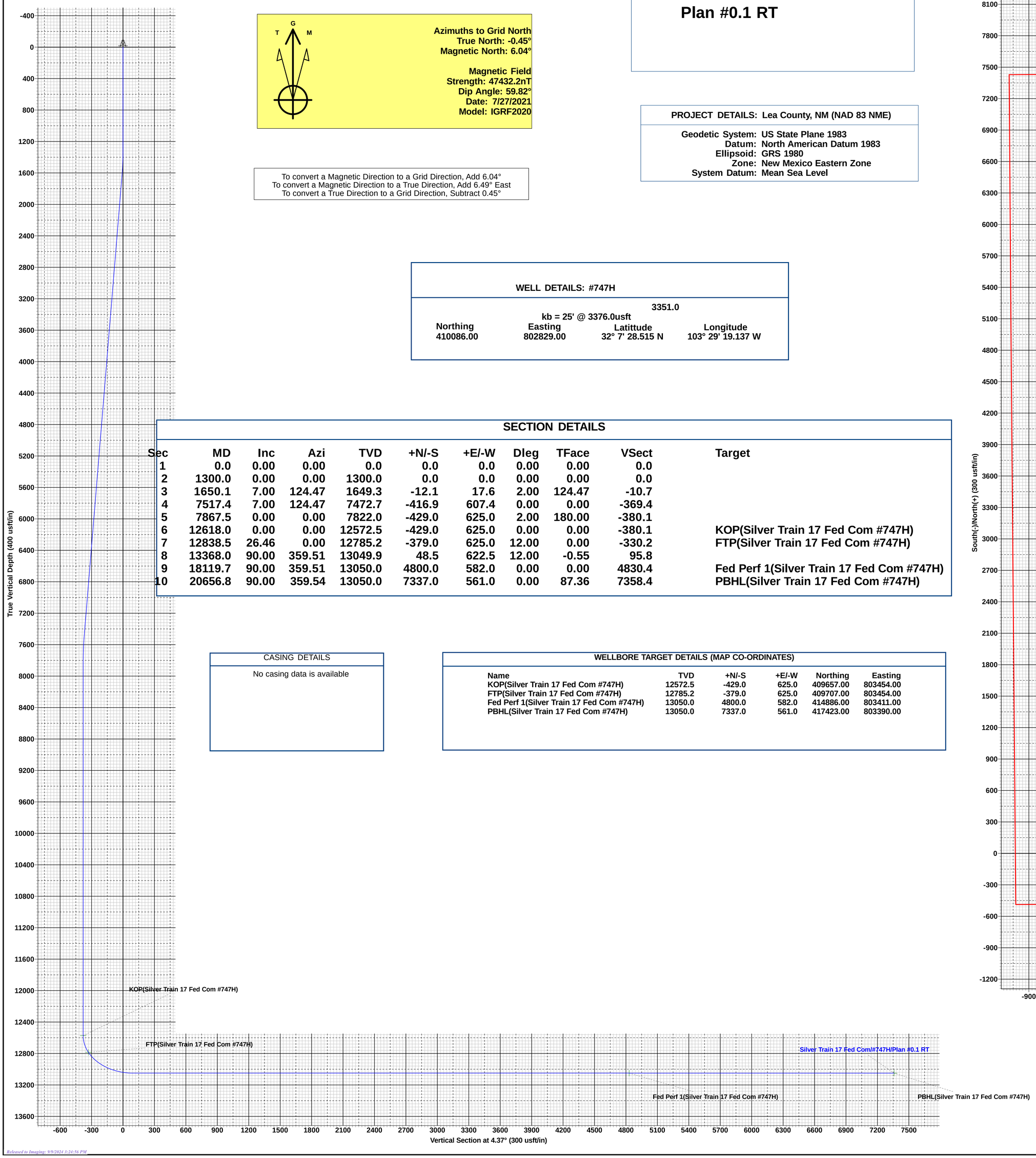

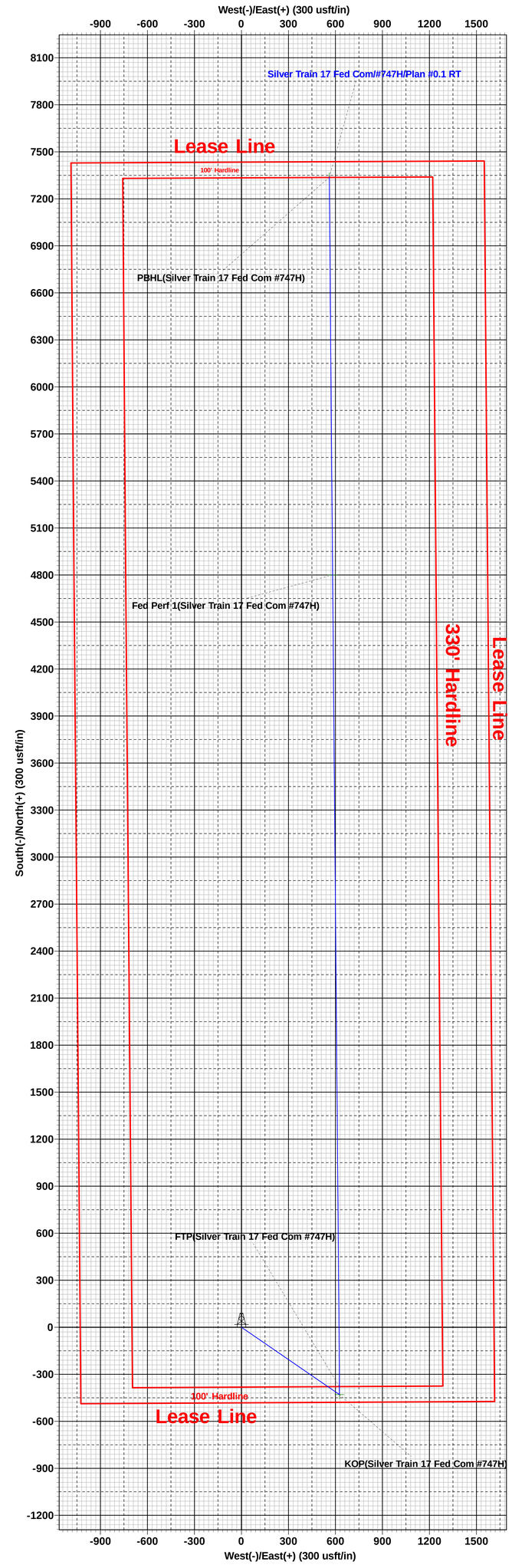

Lea County, NM (NAD 83 NME)
Silver Train 17 Fed Com
#747H
OH
Plan #0.1 RT
11:17, August 24 2021

Released to Imaging: 9/9/2024 3:24:56 PM

PECOS DISTRICT
DRILLING CONDITIONS OF APPROVAL

OPERATOR'S NAME:	EOG Resources Incorporated
LEASE NO.:	NMNM94108
WELL NAME & NO.:	SILVER TRAIN 17 FED COM 747H
SURFACE HOLE FOOTAGE:	482'/S & 1612'/E
BOTTOM HOLE FOOTAGE	2536'/S & 990'/E
LOCATION:	Section 17, T.25 S., R.34 E.
COUNTY:	Lea County, New Mexico

COA

H2S	◉ Yes	○ No	
Potash	◉ None	○ Secretary	○ R-111-P
Cave/Karst Potential	◉ Low	○ Medium	○ High
Cave/Karst Potential	○ Critical		
Variance	○ None	◉ Flex Hose	○ Other
Wellhead	○ Conventional	◉ Multibowl	○ Both
Other	☐ 4 String Area	☐ Capitan Reef	☐ WIPP
Other	☐ Fluid Filled	☑ Cement Squeeze	☐ Pilot Hole
Special Requirements	☐ Water Disposal	☑ COM	☐ Unit

A. HYDROGEN SULFIDE

A Hydrogen Sulfide (H2S) Drilling Plan shall be activated AT SPUD. As a result, the Hydrogen Sulfide area must meet Onshore Order 6 requirements, which includes equipment and personnel/public protection items. If Hydrogen Sulfide is encountered, please provide measured values and formations to the BLM.

B. CASING

Primary Casing Design:

1. The **9-5/8** inch surface casing shall be set at approximately **1,140** feet (a minimum of 25 feet (Lea County) into the Rustler Anhydrite and above the salt) and cemented to the surface.

    a. If cement does not circulate to the surface, the appropriate BLM office shall be notified and a temperature survey utilizing an electronic type temperature survey with surface log readout will be used or a cement bond log shall be run to verify the top of the cement. Temperature survey will be run a minimum of six hours after pumping cement and ideally between 8-10 hours after

completing the cement job.

b. Wait on cement (WOC) time for a primary cement job will be a minimum of **8 hours** or 500 pounds compressive strength, whichever is greater. (This is to include the lead cement)
c. Wait on cement (WOC) time for a remedial job will be a minimum of 4 hours after bringing cement to surface or 500 pounds compressive strength, whichever is greater.
d. If cement falls back, remedial cementing will be done prior to drilling out that string.

2. The **7-5/8** inch intermediate casing shall be set at approximately **11,470** feet. The minimum required fill of cement behind the **7-5/8** inch intermediate casing is:

Option 1 (Single Stage):

- Cement to surface. If cement does not circulate see B.1.a, c-d above. **Wait on cement (WOC) time for a primary cement job is to include the lead cement slurry due to cave/karst or potash.**

Option 2:

Operator has proposed a DV tool, the depth may be adjusted as long as the cement is changed proportionally. The DV tool may be cancelled if cement circulates to surface on the first stage.

a. First stage to DV tool: Cement to circulate. If cement does not circulate off the DV tool, contact the appropriate BLM office before proceeding with second stage cement job.

b. Second stage above DV tool:

- Cement to surface. If cement does not circulate, contact the appropriate BLM office.
  Wait on cement (WOC) time for a primary cement job is to include the lead cement slurry due to cave/karst or potash.

Operator has proposed to pump down 9-5/8" X 7-5/8" annulus. Operator must top out cement after the bradenhead squeeze and verify cement to surface. Operator can also check TOC with Echo-meter. CBL must be run from TD of the 7-5/8" casing to surface if confidence is lacking on the quality of the bradenhead squeeze cement job. Submit results to BLM.

3. The **5-1/2** inch production casing shall be set at approximately **20,657** feet. The minimum required fill of cement behind the **5-1/2** inch production casing is:

Option 1 (Single Stage):

- Cement should tie-back at least **200 feet** into previous casing string. Operator shall provide method of verification.

Option 2:

Operator has proposed a DV tool, the depth may be adjusted as long as the cement is changed proportionally. The DV tool may be cancelled if cement circulates to surface on the first stage.

a. First stage to DV tool: Cement to circulate. If cement does not circulate off the DV tool, contact the appropriate BLM office before proceeding with second stage cement job.

b. Second stage above DV tool:

- Cement should tie-back at least **200 feet** into previous casing string. Operator shall provide method of verification.

C. PRESSURE CONTROL

1. Variance approved to use flex line from BOP to choke manifold. Manufacturer's specification to be readily available. No external damage to flex line. Flex line to be installed as straight as possible (no hard bends).'

2. Operator has proposed a multi-bowl wellhead assembly. This assembly will only be tested when installed on the surface casing. Minimum working pressure of the blowout preventer (BOP) and related equipment (BOPE) required for drilling below the surface casing shoe shall be **5000 (5M)** psi. **Variance is approved to use a 5000 (5M) Annular which shall be tested to 3500 (3.5M) psi.**

   a. Wellhead shall be installed by manufacturer's representatives, submit documentation with subsequent sundry.
   b. If the welding is performed by a third party, the manufacturer's representative shall monitor the temperature to verify that it does not exceed the maximum temperature of the seal.
   c. Manufacturer representative shall install the test plug for the initial BOP test.
   d. If the cement does not circulate and one inch operations would have been possible with a standard wellhead, the well head shall be cut off, cementing operations performed and another wellhead installed.
   e. Whenever any seal subject to test pressure is broken, all the tests in OOGO2.III.A.2.i must be followed.

BOPE Break Testing Variance (Note: For 5M BOPE or less)

- BOPE Break Testing is ONLY permitted for 5M BOPE or less.
- BOPE Break Testing is NOT permitted to drilling the production hole section.

- While in transfer between wells, the BOPE shall be secured by the hydraulic carrier or cradle.
- Any well control event while drilling require notification to the BLM Petroleum Engineer prior to the commencement of any BOPE Break Testing operations.
- A full BOPE test is required prior to drilling the first deep intermediate hole section. If any subsequent hole interval is deeper than the first, a full BOPE test will be required.
- The BLM is to be contacted (575-689-5981 Lea County) 4 hours prior to BOPE tests.
- As a minimum, a full BOPE test shall be performed at 21-day intervals.
- In the event any repairs or replacement of the BOPE is required, the BOPE shall test as per Onshore Oil and Gas Order No. 2.

OFFLINE CEMENTING AND BREAK TESTING IS APPROVED FOR THE SURFACE AND INTERMEDIATE SECTIONS.

D. SPECIAL REQUIREMENT (S)

Communitization Agreement

- The operator will submit a Communitization Agreement to the Santa Fe Office, 301 Dinosaur Trail Santa Fe, New Mexico 87508, at least 90 days before the anticipated date of first production from a well subject to a spacing order issued by the New Mexico Oil Conservation Division. The Communitization Agreement will include the signatures of all working interest owners in all Federal and Indian leases subject to the Communitization Agreement (i.e., operating rights owners and lessees of record), or certification that the operator has obtained the written signatures of all such owners and will make those signatures available to the BLM immediately upon request.
- If the operator does not comply with this condition of approval, the BLM may take enforcement actions that include, but are not limited to, those specified in 43 CFR 3163.1.
- In addition, the well sign shall include the surface and bottom hole lease numbers. When the Communitization Agreement number is known, it shall also be on the sign.

GENERAL REQUIREMENTS

The BLM is to be notified in advance for a representative to witness:

a. Spudding well (minimum of 24 hours)
b. Setting and/or Cementing of all casing strings (minimum of 4 hours)
c. BOPE tests (minimum of 4 hours)

☒ Eddy County
Call the Carlsbad Field Office, 620 East Greene St., Carlsbad, NM 88220,

(575) 361-2822

☒ Lea County
Call the Hobbs Field Station, 414 West Taylor, Hobbs NM 88240, (575) 689-5981

1. Unless the production casing has been run and cemented or the well has been properly plugged, the drilling rig shall not be removed from over the hole without prior approval.

   a. In the event the operator has proposed to drill multiple wells utilizing a skid/walking rig. Operator shall secure the wellbore on the current well, after installing and testing the wellhead, by installing a blind flange of like pressure rating to the wellhead and a pressure gauge that can be monitored while drilling is performed on the other well(s).
   b. When the operator proposes to set surface casing with Spudder Rig
      - Notify the BLM when moving in and removing the Spudder Rig.
      - Notify the BLM when moving in the 2nd Rig. Rig to be moved in within 90 days of notification that Spudder Rig has left the location.
      - BOP/BOPE test to be conducted per Onshore Oil and Gas Order No. 2 as soon as 2nd Rig is rigged up on well.

2. Floor controls are required for 3M or Greater systems. These controls will be on the rig floor, unobstructed, readily accessible to the driller and will be operational at all times during drilling and/or completion activities. Rig floor is defined as the area immediately around the rotary table; the area immediately above the substructure on which the draw works are located, this does not include the dog house or stairway area.

3. The record of the drilling rate along with the GR/N well log run from TD to surface (horizontal well – vertical portion of hole) shall be submitted to the BLM office as well as all other logs run on the borehole 30 days from completion. If available, a digital copy of the logs is to be submitted in addition to the paper copies. The Rustler top and top and bottom of Salt are to be recorded on the Completion Report.

A. CASING

1. Changes to the approved APD casing program need prior approval if the items substituted are of lesser grade or different casing size or are Non-API. The Operator can exchange the components of the proposal with that of superior strength (i.e. changing from J-55 to N-80, or from 36# to 40#). Changes to the approved cement program need prior approval if the altered cement plan has less volume or strength or if the changes are substantial (i.e. Multistage tool, ECP, etc.). The initial wellhead installed on the well will remain on the well with spools used as needed.

2. Wait on cement (WOC) for Potash Areas: After cementing but before commencing any tests, the casing string shall stand cemented under pressure until both of the following conditions have been met: 1) cement reaches a minimum compressive strength of 500 psi for all cement blends, 2) until cement has been in place at least 24 hours. WOC time will be recorded in the driller's log. The casing intergrity test can be done (prior to the cement setting up) immediately after bumping the plug.

3. Wait on cement (WOC) for Water Basin: After cementing but before commencing any tests, the casing string shall stand cemented under pressure until both of the following conditions have been met: 1) cement reaches a minimum compressive strength of 500 psi at the shoe, 2) until cement has been in place at least 8 hours. WOC time will be recorded in the driller's log. See individual casing strings for details regarding lead cement slurry requirements. The casing intergrity test can be done (prior to the cement setting up) immediately after bumping the plug.

4. Provide compressive strengths including hours to reach required 500 pounds compressive strength prior to cementing each casing string. Have well specific cement details onsite prior to pumping the cement for each casing string.

5. No pea gravel permitted for remedial or fall back remedial without prior authorization from the BLM engineer.

6. On that portion of any well approved for a 5M BOPE system or greater, a pressure integrity test of each casing shoe shall be performed. Formation at the shoe shall be tested to a minimum of the mud weight equivalent anticipated to control the formation pressure to the next casing depth or at total depth of the well. This test shall be performed before drilling more than 20 feet of new hole.

7. If hardband drill pipe is rotated inside casing, returns will be monitored for metal. If metal is found in samples, drill pipe will be pulled and rubber protectors which have a larger diameter than the tool joints of the drill pipe will be installed prior to continuing drilling operations.
8. Whenever a casing string is cemented in the R-111-P potash area, the NMOCD requirements shall be followed.

B. PRESSURE CONTROL

1. All blowout preventer (BOP) and related equipment (BOPE) shall comply with well control requirements as described in Onshore Oil and Gas Order No. 2 and API RP 53 Sec. 17.

2. If a variance is approved for a flexible hose to be installed from the BOP to the choke manifold, the following requirements apply: The flex line must meet the requirements of API 16C. Check condition of flexible line from BOP to choke manifold, replace if exterior is damaged or if line fails test. Line to be as straight as possible with no hard bends and is to be anchored according to Manufacturer's

requirements. The flexible hose can be exchanged with a hose of equal size and equal or greater pressure rating. Anchor requirements, specification sheet and hydrostatic pressure test certification matching the hose in service, to be onsite for review. These documents shall be posted in the company man's trailer and on the rig floor.

3. 5M or higher system requires an HCR valve, remote kill line and annular to match. The remote kill line is to be installed prior to testing the system and tested to stack pressure.

4. If the operator has proposed a multi-bowl wellhead assembly in the APD. The following requirements must be met:

    a. Wellhead shall be installed by manufacturer's representatives, submit documentation with subsequent sundry.
    b. If the welding is performed by a third party, the manufacturer's representative shall monitor the temperature to verify that it does not exceed the maximum temperature of the seal.
    c. Manufacturer representative shall install the test plug for the initial BOP test.
    d. Whenever any seal subject to test pressure is broken, all the tests in OOGO2.III.A.2.i must be followed.
    e. If the cement does not circulate and one inch operations would have been possible with a standard wellhead, the well head shall be cut off, cementing operations performed and another wellhead installed.

5. The appropriate BLM office shall be notified a minimum of 4 hours in advance for a representative to witness the tests.

    a. In a water basin, for all casing strings utilizing slips, these are to be set as soon as the crew and rig are ready and any fallback cement remediation has been done. The casing cut-off and BOP installation can be initiated four hours after installing the slips, which will be approximately six hours after bumping the plug. For those casing strings not using slips, the minimum wait time before cut-off is eight hours after bumping the plug. BOP/BOPE testing can begin after cut-off or once cement reaches 500 psi compressive strength (including lead when specified), whichever is greater. However, if the float does not hold, cut-off cannot be initiated until cement reaches 500 psi compressive strength (including lead when specified).

    b. In potash areas, for all casing strings utilizing slips, these are to be set as soon as the crew and rig are ready and any fallback cement remediation has been done. For all casing strings, casing cut-off and BOP installation can be initiated at twelve hours after bumping the plug. However, **no tests** shall commence until the cement has had a minimum of 24 hours setup time, except the casing pressure test can be initiated immediately after bumping the plug (only applies to single stage cement jobs).

c. The tests shall be done by an independent service company utilizing a test plug not a cup or J-packer. The operator also has the option of utilizing an independent tester to test without a plug (i.e. against the casing) pursuant to Onshore Order 2 with the pressure not to exceed 70% of the burst rating for the casing. Any test against the casing must meet the WOC time for water basin (8 hours) or potash (24 hours) or 500 pounds compressive strength, whichever is greater, prior to initiating the test (see casing segment as lead cement may be critical item).

d. The test shall be run on a 5000 psi chart for a 2-3M BOP/BOP, on a 10000 psi chart for a 5M BOP/BOPE and on a 15000 psi chart for a 10M BOP/BOPE. If a linear chart is used, it shall be a one hour chart. A circular chart shall have a maximum 2 hour clock. If a twelve hour or twenty-four hour chart is used, tester shall make a notation that it is run with a two hour clock.

e. The results of the test shall be reported to the appropriate BLM office.

f. All tests are required to be recorded on a calibrated test chart. A copy of the BOP/BOPE test chart and a copy of independent service company test will be submitted to the appropriate BLM office.

g. The BOP/BOPE test shall include a low pressure test from 250 to 300 psi. The test will be held for a minimum of 10 minutes if test is done with a test plug and 30 minutes without a test plug. This test shall be performed prior to the test at full stack pressure.

h. BOP/BOPE must be tested by an independent service company within 500 feet of the top of the Wolfcamp formation if the time between the setting of the intermediate casing and reaching this depth exceeds 20 days. This test does not exclude the test prior to drilling out the casing shoe as per Onshore Order No. 2.

C. DRILLING MUD

Mud system monitoring equipment, with derrick floor indicators and visual and audio alarms, shall be operating before drilling into the Wolfcamp formation, and shall be used until production casing is run and cemented.

D. WASTE MATERIAL AND FLUIDS

All waste (i.e. drilling fluids, trash, salts, chemicals, sewage, gray water, etc.) created as a result of drilling operations and completion operations shall be safely contained and disposed of properly at a waste disposal facility. No waste material or fluid shall be disposed of on the well location or surrounding area.

Porto-johns and trash containers will be on-location during fracturing operations or any other crew-intensive operations.

KPI – 5/2/2023

Approval Date: 05/22/2023

10,000 PSI BOP Annular
Variance Request

EOG Resources request a variance to use a 5000 psi annular BOP with a 10,000 psi BOP stack. The component and compatibility tables along with the general well control plans demonstrate how the 5000 psi annular BOP will be protected from pressures that exceed its rated working pressure (RWP). The pressure at which the control of the wellbore is transferred from the annular preventer to another available preventer will not exceed 3500 psi (70% of the RWP of the 5000 psi annular BOP).

1. Component and Preventer Compatibility Tables

The tables below outlines the tubulars and the compatible preventers in use. This table, combined with the drilling fluid, documents that two barriers to flow will be maintained at all times.

9-7/8" & 8-3/4" Intermediate Hole Section 10M psi requirement					
Component	**OD**	**Primary Preventer**	**RWP**	**Alternate Preventer(s)**	**RWP**
Drillpipe	4.500"	Annular	5M	Upper 3.5 - 5.5" VBR Lower 3.5 - 5.5" VBR	10M 10M
HWDP	4.500"	Annular	5M	Upper 3.5 - 5.5" VBR Lower 3.5 - 5.5" VBR	10M 10M
Jars	4.500"	Annular	5M	Upper 3.5 - 5.5" VBR Lower 3.5 - 5.5" VBR	10M 10M
DCs and MWD tools	6.500 – 8.000"	Annular	5M	-	-
Mud Motor	6.750 – 8.000"	Annular	5M	-	-
Intermediate casing	7.625"	Annular	5M	-	-
Open-hole	-	Blind Rams	10M	-	-

6-3/4" Production Hole Section 10M psi requirement					
Component	**OD**	**Primary Preventer**	**RWP**	**Alternate Preventer(s)**	**RWP**
Drillpipe	4.500"	Annular	5M	Upper 3.5 - 5.5" VBR Lower 3.5 - 5.5" VBR	10M 10M
HWDP	4.500"	Annular	5M	Upper 3.5 - 5.5" VBR Lower 3.5 - 5.5" VBR	10M 10M
DCs and MWD tools	4.750 – 5.500"	Annular	5M	Upper 3.5 - 5.5" VBR Lower 3.5 - 5.5" VBR	10M 10M
Mud Motor	4.750 – 5.500"	Annular	5M	Upper 3.5 - 5.5" VBR Lower 3.5 - 5.5" VBR	10M 10M
Mud Motor	5.500 – 5.750"	Annular	5M	-	-
Production casing	5.500"	Annular	5M	Upper 3.5 - 5.5" VBR Lower 3.5 - 5.5" VBR	10M 10M
Open-hole	-	Blind Rams	10M	-	-

VBR = Variable Bore Ram

EOG Resources
11” 10M PSI BOP Stack

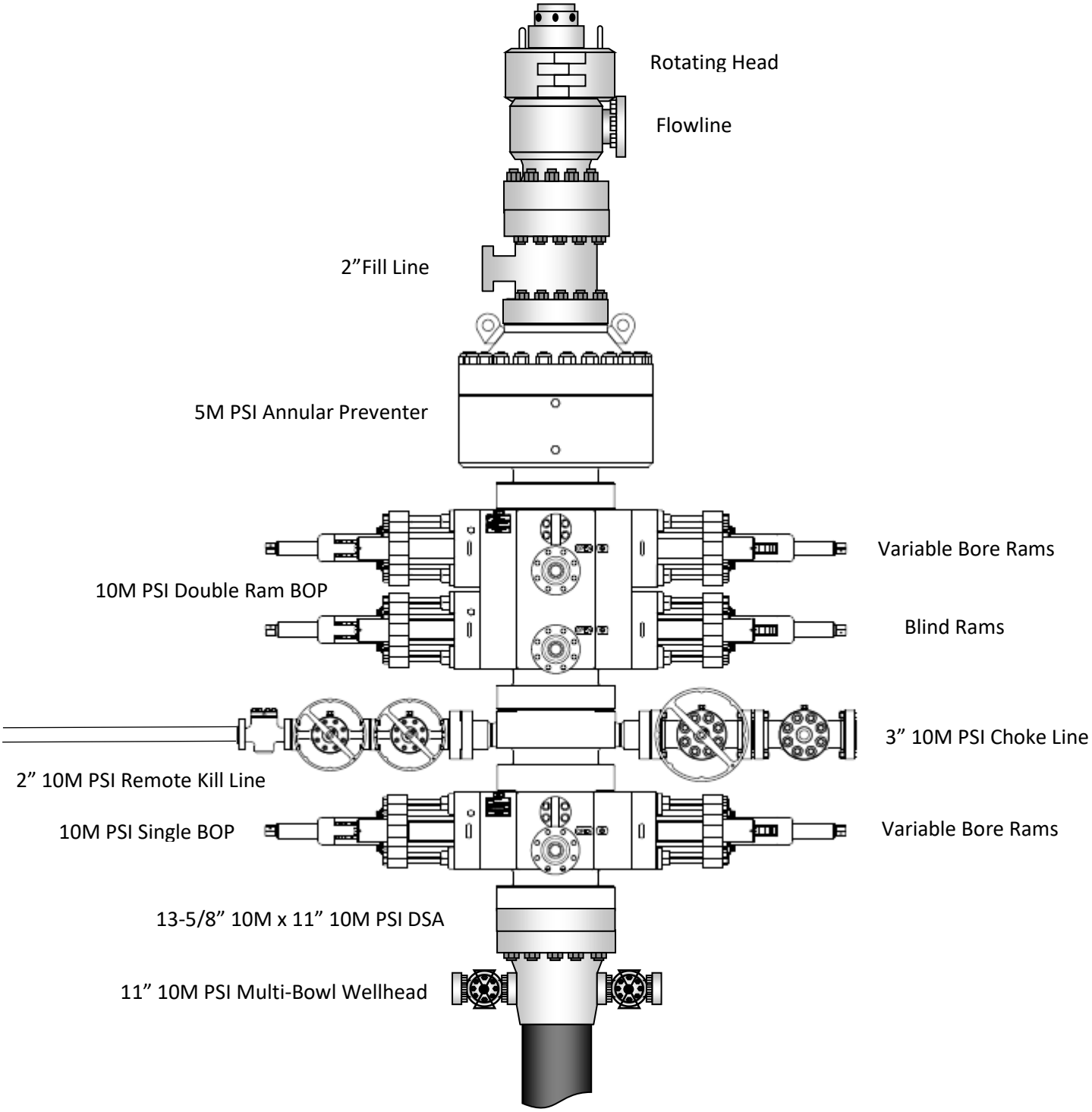

2. Well Control Procedures

Below are the minimal high-level tasks prescribed to assure a proper shut-in while drilling, tripping, running casing, pipe out of the hole (open hole), and moving the BHA through the BOPs. At least one well control drill will be performed weekly per crew to demonstrate compliance with the procedure and well control plan. The well control drill will be recorded in the daily drilling log. The type of drill will be determined by the ongoing operations, but reasonable attempts will be made to vary the type of drill conducted (pit, trip, open hole, choke, etc.). This well control plan will be available for review by rig personnel in the EOG Resources drilling supervisor's office on location, and on the rig floor. All BOP equipment will be tested as per Onshore O&G Order No. 2 with the exception of the 5000 psi annular which will be tested to 100% of its RWP.

General Procedure While Drilling

1. Sound alarm (alert crew)
2. Space out drill string
3. Shut down pumps (stop pumps and rotary)
4. Shut-in Well (uppermost applicable BOP, typically annular preventer first. HCR and choke will already be in the closed position.)
5. Confirm shut-in
6. Notify toolpusher/company representative
7. Read and record the following:
    a. SIDPP and SICP
    b. Pit gain
    c. Time
8. Regroup and identify forward plan
9. If pressure has built or is anticipated during the kill to reach 70% or greater of the RWP of the annular preventer, confirm spacing and close the upper variable bore rams.

General Procedure While Tripping

1. Sound alarm (alert crew)
2. Stab full opening safety valve and close
3. Space out drill string
4. Shut-in (uppermost applicable BOP, typically annular preventer first. HCR and choke will already be in the closed position.)
5. Confirm shut-in
6. Notify toolpusher/company representative
7. Read and record the following:
    a. SIDPP and SICP
    b. Pit gain
    c. Time
8. Regroup and identify forward plan
9. If pressure has built or is anticipated during the kill to reach 70% or greater of the RWP of the annular preventer, confirm spacing and close the upper variable bore rams.

General Procedure While Running Production Casing

1. Sound alarm (alert crew)
2. Stab crossover and full opening safety valve and close
3. Space out string

4. Shut-in (uppermost applicable BOP, typically annular preventer first. HCR and choke will already be in the closed position.)
5. Confirm shut-in
6. Notify toolpusher/company representative
7. Read and record the following:
    a. SIDPP and SICP
    b. Pit gain
    c. Time
8. Regroup and identify forward plan
9. If pressure has built or is anticipated during the kill to reach 70% or greater of the RWP of the annular preventer, confirm spacing and close the upper variable bore rams.

General Procedure With No Pipe In Hole (Open Hole)

1. Sound alarm (alert crew)
2. Shut-in with blind rams. (HCR and choke will already be in the closed position.)
3. Confirm shut-in
4. Notify toolpusher/company representative
5. Read and record the following:
    a. SICP
    b. Pit gain
    c. Time
6. Regroup and identify forward plan

General Procedures While Pulling BHA thru Stack

1. PRIOR to pulling last joint of drillpipe thru the stack.
    a. Perform flowcheck, if flowing:
    b. Sound alarm (alert crew)
    c. Stab full opening safety valve and close
    d. Space out drill string with tool joint just beneath the upper variable bore rams.
    e. Shut-in using upper variable bore rams. (HCR and choke will already be in the closed position.)
    f. Confirm shut-in
    g. Notify toolpusher/company representative
    h. Read and record the following:
        i. SIDPP and SICP
        ii. Pit gain
        iii. Time
    i. Regroup and identify forward plan

2. With BHA in the stack and compatible ram preventer and pipe combo immediately available.
    a. Sound alarm (alert crew)
    b. Stab crossover and full opening safety valve and close
    c. Space out drill string with upset just beneath the upper variable bore rams.
    d. Shut-in using upper variable bore rams. (HCR and choke will already be in the closed position.)
    e. Confirm shut-in
    f. Notify toolpusher/company representative
    g. Read and record the following:
        i. SIDPP and SICP

    ii. Pit gain
    iii. Time
  h. Regroup and identify forward plan

3. With BHA in the stack and NO compatible ram preventer and pipe combo immediately available.
  a. Sound alarm (alert crew)
  b. If possible to pick up high enough, pull string clear of the stack and follow “Open Hole” scenario.
  c. If impossible to pick up high enough to pull the string clear of the stack:
  d. Stab crossover, make up one joint/stand of drillpipe, and full opening safety valve and close
  e. Space out drill string with tooljoint just beneath the upper variable bore ram.
  f. Shut-in using upper variable bore ram. (HCR and choke will already be in the closed position.)
  g. Confirm shut-in
  h. Notify toolpusher/company representative
  i. Read and record the following:
    i. SIDPP and SICP
    ii. Pit gain
    iii. Time
  j. Regroup and identify forward plan

Released to Imaging: 9/9/2024 3:24:56 PM

Received by OCD: 8/28/2024 9:36:05 AM

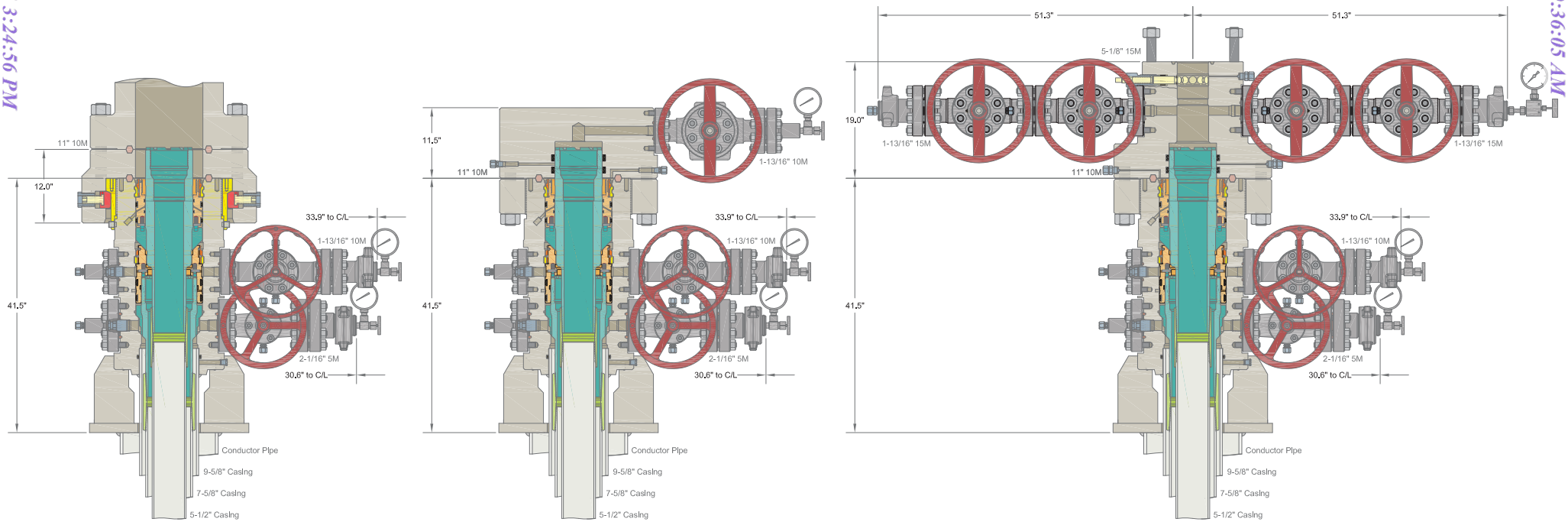

INFORMATION CONTAINED HEREIN IS THE PROPERTY OF CACTUS WELLHEAD, LLC. REPRODUCTION, DISCLOSURE, OR USE THEREOF IS PERMISSIBLE ONLY AS PROVIDED BY CONTRACT OR AS EXPRESSLY AUTHORIZED BY CACTUS WELLHEAD, LLC.

ALL DIMENSIONS APPROXIMATE

CACTUS WELLHEAD LLC	EOG RESOURCES DELAWARE		
20" x 9-5/8" x 7-5/8" x 5-1/2" MBU-T-SF SOW Wellhead System With 11" 10M x 5-1/8" 15M CMT-DBLHPS-SB Tubing Head, Mandrel Hangers, Quick Connect Drilling Adapter And TA Cap	DRAWN	DLE	23OCT18
	APPRV		
	DRAWING NO.	HBE0000010	

Metal One Corp. Metal One	MO-FXL Connection Data Sheet	Page	MCTP
		Date	3-Nov-16
		Rev.	0

MO-FXL

Geometry

Pipe Body

	Imperial		S.I.	
Grade	P110HC *1		P110HC *1	
Pipe OD (D)	7 5/8	in	193.68	mm
Weight	29.70	lb/ft	44.25	kg/m
Actual weight	29.04		43.26	kg/m
Wall Thickness (t)	0.375	in	9.53	mm
Pipe ID (d)	6.875	in	174.63	mm
Pipe body cross section	8.537	in^2	5,508	mm^2
Drift Dia.	6.750	in	171.45	mm

Connection

Box OD (W)	7.625	in	193.68	mm
PIN ID	6.875	in	174.63	mm
Make up Loss	4.219	in	107.16	mm
Box Critical Area	5.714	in^2	3686	mm^2
Joint load efficiency	70	%	70	%
Thread Taper	1 / 10 (1.2" per ft)			
Number of Threads	5 TPI			

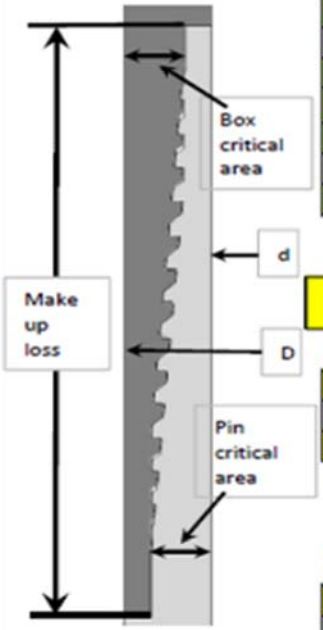

Performance

Performance Properties for Pipe Body

S.M.Y.S. *1	1,067	kips	4,747	kN
M.I.Y.P. *1	10,760	psi	74.21	MPa
Collapse Strength *1	7,360	psi	50.76	MPa

Note S.M.Y.S.= Specified Minimum YIELD Strength of Pipe body
M.I.Y.P. = Minimum Internal Yield Pressure of Pipe body
*1 Based on VSB P110HC (YS=125~140ksi)

Performance Properties for Connection

Tensile Yield load	747 kips (70% of S.M.Y.S.)
Min. Compression Yield	747 kips (70% of S.M.Y.S.)
Internal Pressure	8,610 psi (80% of M.I.Y.P.)
External Pressure	100% of Collapse Strength
Max. DLS (deg. /100ft)	40

Recommended Torque

Min.	15,500	ft-lb	21,000	N-m
Opti.	17,200	ft-lb	23,300	N-m
Max.	18,900	ft-lb	25,600	N-m
Operational Max.	23,600	ft-lb	32,000	N-m

Note : Operational Max. torque can be applied for high torque application

District I
1625 N. French Dr., Hobbs, NM 88240
Phone:(575) 393-6161 Fax:(575) 393-0720
District II
811 S. First St., Artesia, NM 88210
Phone:(575) 748-1283 Fax:(575) 748-9720
District III
1000 Rio Brazos Rd., Aztec, NM 87410
Phone:(505) 334-6178 Fax:(505) 334-6170
District IV
1220 S. St Francis Dr., Santa Fe, NM 87505
Phone:(505) 476-3470 Fax:(505) 476-3462

State of New Mexico
Energy, Minerals and Natural Resources
Oil Conservation Division
1220 S. St Francis Dr.
Santa Fe, NM 87505

CONDITIONS

Action 378664

CONDITIONS

Operator: EOG RESOURCES INC 5509 Champions Drive Midland, TX 79706	OGRID: 7377
	Action Number: 378664
	Action Type: [C-101] BLM - Federal/Indian Land Lease (Form 3160-3)

CONDITIONS

Created By	Condition	Condition Date
pkautz	Will require a File As Drilled C-102 and a Directional Survey with the C-104	9/9/2024
pkautz	Once the well is spud, to prevent ground water contamination through whole or partial conduits from the surface, the operator shall drill without interruption through the fresh water zone or zones and shall immediately set in cement the water protection string	9/9/2024
pkautz	Oil base muds are not to be used until fresh water zones are cased and cemented providing isolation from the oil or diesel. This includes synthetic oils. Oil based mud, drilling fluids and solids must be contained in a steel closed loop system	9/9/2024
pkautz	Cement is required to circulate on both surface and intermediate1 strings of casing	9/9/2024
pkautz	If cement does not circulate on any string, a CBL is required for that string of casing	9/9/2024